MORRIS

SERVICE MANUAL

EIGHT XL SERIES
Air Cart

Rev-01

Table of Contents

Specifications **8**
8240XL 8
8336XL 10
8300XL 11
8425XL 12
8370XL 13
8435XL, 8630XL and 8650XL - Tow Between 14
8435XL, 8630XL and 8650XL - Tow Behind 15
Tank Lids 17
Tank Lid Adjustment 17
Load/Unload Auger **19**
Removal Of Hydraulic Auger Motor 19
Auger Lock Arm Detail 20
Auger Balancing Details 21
Fan and Plenum **22**
Hydraulic Fan Drive 22
Fan 23
Fan Screen 23
Fan Impeller 23
Storage 23
Rotor Clearance 24
Hoses 24
Equalizers 25
Hydraulic Orbit Motor 26
Repair/Replacement 26
Orbit Motor Coupler (17” Diameter Fan only) 26
Fan Speed Recommendations 27
Fan Speed Recommendations 28
Rem Fan - Hydraulic Drive 29
Orbit Motor 30
Tires **31**
Front Axle 31
Rear Axle 31
Quad Steer 33
Wheel Bearings 34
Jackshaft 35
Disconnect Main Drive Chain 36
Installation of Main Drive Chain 36
Metering **37**
Spacing Sprocket 37
Tire Size Sprocket 37
Metering Shaft Assembly 46
Metering Shaft Removal 48
Blank Off Installation 49
8435XL, 8630XL & 8650XL Secondary Clutch & Frame Idler 50
Calibration - Ground Drive **51**
Rate Chart Use 51
Metering Rate Adjustment 52
Acre Tally 52
Rate Calibration 53
Seed Plate Usage **54**

Table of Contents - Continued

Calibration - Continued 55
Imperial Crank Calibration Table 57
8240 Tow Between and Tow Behind - Standard Tires 57
8300 & 8336 Tow Behind - Standard Tires 57
8240 Tow Between and Tow Behind - Optional Tires 58
8300 & 8336 Tow Behind - Optional Tires 58
8300, 8336, 8370 & 8425 Tow Between 59
8370 & 8425 Tow Behind 59
8435, 8630 and 8650 - Standard Tire 60
All Other Models - Optional Tire 60
8435, 8630 and 8650 - Optional Dual Tires 61
Seeding Fine Seeds (Canola, Mustard, etc.) 62
Applying Inoculant 62
Monitor N44049 - Version 3 63
Introduction 63
Identifying Monitor Switches 64
Identifying Monitor Displays 64
Operating Screen 65
Display Section 65
Active Alarm Window 65
Bin Level Icon Window 65
Soft Key Label Windows 65
Navigating the Operating Screen 66
Enlarged Operating Screen 67
Installing Monitor 68
Monitor Harness 69
Clutch Harness 70
Startup 72
Power On 72
Power Off 72
Force Language 72
Startup Menu Screen 73
Sensor Installation 74
Installation Precautions 74
Installation Procedure 75
Monitor Settings 77
Navigating Settings Screens 77
The Menu Title 77
The Body of the Menu 77
The Menu Soft Key Descriptions 78
Changing Monitor Settings 79
Entering the “Settings Menu” 79
Settings Menu Chart - Standard Drive 80
Wheel Pulses Per 400 Feet (PP400) Standard Drive 81
PP400 Math Calculation 81
Speed Calibration 82
Alarms 83
Introduction 83
Nuisance Shaft Alarm 83
“In Motion” Notification 84
Low Fan Alarms 84
Blockage Sensing 85
Module Installation 85

Table of Contents - Continued

Runs per Module Setup 85
Individual Runs Setup 85
Blockage Module Test 86
Blockage Calibration 87
Optical Blockage Run Bad Alarms 88
Blockage Alarms 88
Area Display 89
Resetting Area 89
Sensor Replacement 90
Monitor N37010 - Version 2 91
Introduction 91
Identifying Monitor Switches 92
Identifying Monitor Displays 92
Lower Display 92
Tank Level Indicator 92
Preparing Monitor 93
Start-up 94
Normal Start-up 94
Special Start-up 94
Start-up Error Messages 95
First Class 95
Second Class 95
System Installation 96
Sensor LEARN Mode 96
Installation Precautions 96
Installation Procedure 97
Monitor Programming 98
Procedure 98
Entering Change Settings Mode 98
Exiting from Change Settings Mode 98
Canola Setting 99
PP400 Calculation 101
PP400 Pulse Counting Mode 101
Normal Operation 102
Alarms 103
Introduction 103
Sensor Alarm Chart 104
Tank Level Alarms 104
Low Fan Alarms 105
Ground Drive “In Motion” Alarm 105
Regular Blockage Module Alarms - Pin Sensors 106
Optical Blockage Module Alarms 107
Communication Alarms 108
System Error Alarms 108
Area Display 109
Resetting the Field Acre Meter 109
Resetting the Total Acre Meter 109
Application Rate Check 110
Flow - Pin Sensors 112
Introduction 112
Test Mode 113
Calibration Mode 114
Operation Mode 115

Table of Contents - Continued

Flow - Optical Sensors 116
Introduction 116
Optical Blockage Module Setup 116
Flow Function 117
Flow Test 117
Flow Calibration 118
Sensor Replacement 119
Sensor Gap Settings 119
Reed Switch Sensors 119
Variable Reluctance Sensors 119
Trouble Shooting Guides 120
Checking Harness 120
Checking Sensors 120
Checking Blockage Modules 120
1.0 General Description 121
2.0 Inputs and Outputs 121
2.1 Power Input Cable 121
2.2 MUXBUS Cable 121
2.3 Radar 121
2.4 Sensor Test Output 121
FTU - Field Test Unit 122
3.0 Operator Controls and Indicators 122
3.1 SPEED key 122
3.2 SHAFT key 122
3.3 SEED COUNTER key 122
3.4 SEEDER POP RATE key 122
3.5 VAR CONTROLLER key 123
3.6 BIN LEVEL key 123
3.7 FAN key 123
3.8 BLOCKAGE MODULE key 123
3.9 OPTICAL BLOCKAGE MODULE key 123
3.10 CLUTCH / CONSOLE key 123
3.11 UP and DOWN keys 123
3.12 High-Normal-Low indicators 124
3.13 Pass - Fail indicators 124
3.14 SENSOR - CONSOLE - INSTALL indicators 124
4.0 Operational Description 124
4.1 Sensor test mode 124
4.1.1 Testing shaft and fan sensors 124
4.1.2 Testing radar speed sensors 125
4.1.3 Testing bin level sensors 125
4.1.4 Testing seed counting sensors 125
4.1.5 Testing variable rate console 125
4.1.6 Testing variable rate controller 125
4.2 Console test mode 126
4.2.1 Installing sensors (Install Mode) 126
4.2.1 Installing sensors (Install Mode) - Continued 127
4.2.2 Simulating sensors 128
4.2.3 Changing simulated sensor values 129
4.2.4 Simulating a failed sensor 130
4.3 Version/Issue Mode 130
5.0 Electrical specifications 131
6.0 Environmental specifications 131

Table of Contents - Continued

7.0 Physical specifications 131
Hydraulics 132
8300 & 8370 - Tow Behind Hydraulic Drive w/Auger 132
8435, 8630 & 8650 - Tow Behind Hydraulic Drive w/Auger 135
Auger with Hydraulic Assist - Tow Behind 138
Conveyor with Hydraulic Assist Tow Behind - Prior to 2011 140
Conveyor with Hydraulic Assist Tow Behind - 2011 to 2012 142
Tow Between Hydraulic Drive w/Auger 144
8435XL, 8630XL & 8650XL Tow Between Hydraulic Drive w/Auger 147
8435XL, 8630XL & 8650XL Tow Between Hydraulic Drive w/Conveyor 150
8435XL, 8630XL & 8650XL Tow Between Hydraulic Hitch Jack 153
Dual Fan - Tow Behind 154
Dual Fan - Tow Between 156
Tow Behind Hydraulic Extension Kit for Rear Tow Hitch 157
Meter Shutoff Hydraulics 158
Meter Shutoff Electrical 160
Meter Shut-Off 161
Operating Guidelines 161
Hydraulic Assit Conveyor/Auger 162
Arm Speed Control Adjustment 162
Controller Storage 162
Hydraulic Assist Operation 163
Hydraulic Assist Transport 165
Conveyor 166
Operation 166
Startup and Break-In 166
Squaring One End of Belt 167
Installing Belt Splice 167
Installing Belt into the Conveyor 169
Tracking the Belt 170
Conveyor Belt Adjustment 171
Bearings 171
Conveyor Belt Care 171
Conveyor Assembly - Parts 172
Lower End Group - Parts 174
Upper End Group - Parts 176
Trouble Shooting 177
General 177
Delivery hoses plugged 177
Hydraulic fan will not turn 177
Fan turning too slow 177
Material flowing thru system when unit is stationary and the fan running 177
Material not being divided in distribution head 178
Clutch slipping 178
Material not being metered out 178
Material not being accurately metered out of the metering body 179
Plugged seed boots 180
Monitor 181
Monitor lights up but does not seem to work 181
No fan display 181
No ground speed display 181
No meter speed display 181
No display, no back light 181

Table of Contents - Continued

Bin indicates always empty 182
Bin indicates always full 182

Technical Bulletins 183
Blank Off 183
Liquid Tank Capacities 184
Optical Blockage Module 185
Meter Shaft Assembly 186
VRT Valve 187
Auger Hopper 188
VRT Hydraulic Valve 189
Fan Orbit Motor 190
Auger Motor Bolt 191
VRT Motor Seal Kits 192
Main Clutch Assembly 193
VRT Hydraulic Valve 194

Metric 195
Rate Calibration - Metric 195
Calibration Formulas - Metric 195
8240 Tow Between and Tow Behind - Standard Tires 196
8300 & 8336 Tow Behind - Standard Tires 196
8240 Tow Between and Tow Behind - Optional Tires 197
8300 & 8336 Tow Behind - Optional Tires 197
8300, 8336, 8370 & 8425 Tow Between 198
8370 & 8425 Tow Behind 198
8435, 8630 and 8650 - Standard Tire 199
All Other Models - Optional Tire 199
8435, 8630 and 8650 - Optional Dual Tires 200
Suggested Parts Order List 201

TOPCON 203
Monitor Harness 204
Monitor Harness - Blockage 205
Tillage Switch 206
EAGLE - System 207
X20 - System 209
Installation of MDECU on Air Cart 212
Installation of Sensors on Air Cart 213
Manual Overide 215
Topcon Switch Box - Optional (A1267) 217
Fan Pressure Sensor - Optional (A267) 217

Calibration - VRT 218
Metering Rate Adjustment 220
Manual Override 221
Rate Setting 221
Calculating Meter Shaft RPM 221
Operating in Manual Override 222

AGTRON 229
Blockage Installation Diagram 250
Menu Navigation Flow Chart 251

8240XL
Specifications and Options

Model	8240XL	8240XL
Configuration	**Tow Between**	**Tow Behind**
Length without auger (with auger)	23' 4" (7.14m) (24' 7" (7.49m))	23' 4" (7.14m) (24' 7" (7.49m))
Height	14' (4.27m)	14' (4.27m)
Width	12' 5" (3.78m)	12' 5" (3.78m)
Weight (Hydraulic Drive)	11,766 lbs. (5,348 kg)	9,595 lbs. (4,361 kg)
Safety Lights	Standard	Standard
Safety Chain	Standard	Standard
Tank Capacity - Front Tank	Optional 83 bu (2,938 l)	Optional 83 bu (2,938 l)
Tank Capacity - Middle Tank	93 bu (3,272 l)	93 bu (3,272 l)
Tank Capacity - Rear Tank	150 bu (5,278 l)	150 bu (5,278 l)
Tank Capacity - Total	**243 bu (8,550 l)**	**243 bu (8,550 l)**
Tank Screens	Standard	Standard
Tank Access Ladder R.H.S.	Standard	Standard
Rated Fan Speed	17" fan - up to 5,000 r.p.m.	17" fan - up to 5,000 r.p.m.
Fan Impeller Diameter	17" (43 cm)	17" (43 cm)
Hydraulic Drive - piston type orbit motor (Closed Centre or Closed Centre Load Sensing systems required) Hydraulic requirements for Air Cart only at Rated Fan Speed.	16cc 21 U.S. gal./min. (80 l/min) at 2,750 p.s.i. (18,960 kpa) VRT requires an additional 5.5 U.S. gal/min (21 l/min)	16cc 21 U.S. gal./min. (80 l/min) at 2,750 p.s.i. (18,960 kpa) VRT requires an additional 5.5 U.S. gal/min (21 l/min)
Loading Auger	Standard (10" Dia x 21' Lg.) (0.25m Dia x 6.4m Lg.)	Standard (10" Dia x 21' Lg.) (0.25m Dia x 6.4m Lg.)
Quad Steer	N/A	Optional
Tires - Standard (Front)	N/A	(2) 21.5 x 16.1 - 10 ply rating Soft Trac
Tires - Optional (Front)	N/A	(2) 21.5 x 16.1 - 12 ply rating Lug (2) 560/65 D24 LI 140 Soft Trac (2) 500/70 R24 Lug
Tires - Quad Steer (Front)	N/A	(2) 480/70 R30 Lug
Tires - Standard (Rear)	(2) 23.1 x 26 - 12 ply rating AWT	(2) 23.1 x 26 - 12 ply rating AWT
Tires - Optional (Rear)	(2) 23.1 x 26 - 10 ply rating Rice (2) 30.5 x 32 - 12 ply rating AWT (2) 800/65 R32 - LI 172 Lug (2) 900/65 R32 - LI 172 Lug	(2) 23.1 x 26 - 10 ply rating Rice (2) 30.5 x 32 - 12 ply rating AWT (2) 800/65 R32 - LI 172 Lug (2) 900/65 R32 - LI 172 Lug
Metering - Ground Driven	Standard	Standard
Metering - Variable Rate (VRT)	Optional	Optional
Metering - GPS Compatible VRT	Optional	Optional
Meter Shut Off	Electric	Electric
Number Secondary Runs - Single Shoot	21 to 99	21 to 99
Number Secondary Runs - Double Shoot	42 to 198	42 to 198
Number Secondary Runs - Triple Shoot	63 to 297	63 to 297
Primary Hose - Diameter	2 1/2" (6.4 cm)	2 1/2" (6.4 cm)
Secondary Hose - Diameter	Standard - 15/16" (2.4 cm) Optional - 1 1/4" (3.2 cm)	Standard - 15/16" (2.4 cm) Optional - 1 1/4" (3.2 cm)
Frame	Formed heavy wall 4" x 10" (10 cm x 25.4 cm) tubing	Formed heavy wall 4" x 10" (10 cm x 25.4 cm) tubing
Walk Through Tank	Standard	Standard
Easy Clean Out System	Standard	Standard
Meter Drive Options - Second Clutch (For spot fertilizing on the go)	Standard	Standard
Monitor (Shaft Motion (3), Bin Level (3), Fan Speed, Acre Tally, Ground Speed)	Standard Optional Seed Flow	Standard Optional Seed Flow
Work Switch (Mounted to Seeding Machine)	Optional (Ground Drive Only)	Optional (Ground Drive Only)
Rear Tow Hitch	Standard (Max 26,000 lb Draft Load) (Max 11,818 kg Draft Load)	Optional (Max 15,000 lb Draft Load) (Max 6,818 kg Draft Load)
Mechanical Acre Meter	Optional (Ground Drive Only)	Optional (Ground Drive Only)
Hitch Stand	N/A	Optional

8300XL
Specifications and Options

Model	8300XL	8300XL
Configuration	**Tow Between**	**Tow Behind**
Length without auger (with auger)	23' 4" (7.14m) (24' 7" (7.49m))	23' 4" (7.14m) (24' 7" (7.49m))
Height	15' (4.57m)	15' (4.57m)
Width	13' 4" (4.06m)	12' 5" (3.78m)
Weight (Hydraulic Drive)	11,986 lbs. (5,448 kg)	9,815 lbs. (4,461 kg)
Safety Lights	Standard	Standard
Safety Chain	Standard	Standard
Tank Capacity - Front Tank	Optional 83 bu (2,938 l)	Optional 83 bu (2,938 l)
Tank Capacity - Middle Tank	117 bu (4,126 l)	117 bu (4,126 l)
Tank Capacity - Rear Tank	186 bu (6,537 l)	186 bu (6,537 l)
Tank Capacity - Total	**303 bu (10,663 l)**	**303 bu (10,663 l)**
Tank Screens	Standard	Standard
Tank Access Ladder R.H.S.	Standard	Standard
Rated Fan Speed	17" fan - up to 5,000 r.p.m.	17" fan - up to 5,000 r.p.m.
Fan Impeller Diameter	17" (43 cm)	17" (43 cm)
Hydraulic Drive - piston type orbit motor (Closed Centre or Closed Centre Load Sensing systems required) Hydraulic requirements for Air Cart only at Rated Fan Speed.	16cc 21 U.S. gal./min. (80 l/min) at 2,750 p.s.i. (18,960 kpa) VRT requires an additional 5.5 U.S. gal/min (21 l/min)	16cc 21 U.S. gal./min. (80 l/min) at 2,750 p.s.i. (18,960 kpa) VRT requires an additional 5.5 U.S. gal/min (21 l/min)
Loading Auger	Standard (10" Dia x 21' Lg.) (0.25m Dia x 6.4m Lg.)	Standard (10" Dia x 21' Lg.) (0.25m Dia x 6.4m Lg.)
Quad Steer	N/A	Optional
Tires - Standard (Front)	N/A	(2) 500/70 R24 Lug Distance Center-Center Inner 40" (102 cm)
Tires - Quad Steer (Front)	N/A	(2) 480/70 R30 Lug Distance Center-Center 124" (315 cm)
Tires - Standard (Rear)	(2) 800/65 R32 - LI 172 Lug Distance Center-Center 128" (325 cm)	(2) 800/65 R32 - LI 172 Lug Distance Center-Center 128" (325 cm)
Tires - Optional (Rear)	(2) 900/65 R32 - LI 172 Lug Distance Center-Center 132" (335 cm) Duals - (4) 520/85 R38 Lug Distance Center-Center Inner 119" (302 cm) Distance Center-Center Outer 171" (434 cm)	(2) 900/65 R32 - LI 172 Lug Distance Center-Center 132" (335 cm) Duals - (4) 520/85 R38 Lug Distance Center-Center Inner 119" (302 cm) Distance Center-Center Outer 171" (434 cm)
Metering - Ground Driven	Standard	Standard
Metering - Variable Rate (VRT)	Optional	Optional
Metering - GPS Compatible VRT	Optional	Optional
Meter Shut Off	Electric	Electric
Number Secondary Runs - Single Shoot	21 to 99	21 to 99
Number Secondary Runs - Double Shoot	42 to 198	42 to 198
Number Secondary Runs - Triple Shoot	63 to 297	63 to 297
Primary Hose - Diameter	2 1/2" (6.4 cm)	2 1/2" (6.4 cm)
Secondary Hose - Diameter	Standard - 15/16" (2.4 cm) Optional - 1 1/8" (2.8 cm)	Standard - 15/16" (2.4 cm) Optional - 1 1/8" (2.8 cm)
Frame	Formed heavy wall 4" x 10" (10 cm x 25.4 cm) tubing	Formed heavy wall 4" x 10" (10 cm x 25.4 cm) tubing
Walk Through Tank	Standard	Standard
Easy Clean Out System	Standard	Standard
Meter Drive Options -Second Clutch (For spot fertilizing on the go)	Standard	Standard
Monitor (Shaft Motion (3), Bin Level (3), Fan Speed, Acre Tally, Ground Speed)	Standard Optional Seed Flow	Standard Optional Seed Flow
Work Switch (Mounted to Seeding Machine)	Optional	Optional
Rear Tow Hitch	Standard (Max 26,000 lb Draft Load) (Max 11,818 kg Draft Load)	Optional (Max 15,000 lb Draft Load) (Max 6,818 kg Draft Load)
Mechanical Acre Meter	Optional (Ground Drive Only)	Optional (Ground Drive Only)
Hitch Stand	N/A	Optional

8336XL
Specifications and Options

Model	8336XL	8336XL
Configuration	**Tow Between**	**Tow Behind**
Length without auger (with auger)	23' 4" (7.14m) (24' 7" (7.49m))	23' 4" (7.14m) (24' 7" (7.49m))
Height	13' 4" (4.06)	13' 4" (4.06)
Width	13' 4" (4.06)	12' 5" (3.78)
Weight (Hydraulic Drive)	12,611 lbs. (5,732 kg)	10,440 lbs. (4,745 kg)
Safety Lights	Standard	Standard
Safety Chain	Standard	Standard
Tank Capacity - Front Tank	103 bu (3,650 l)	103 bu (3,650 l)
Tank Capacity - Middle Tank	93 bu (3,272 l)	93 bu (3,272 l)
Tank Capacity - Rear Tank	150 bu (5,278 l)	150 bu (5,278 l)
Tank Capacity - Total	**346 bu (12,200 l)**	**346 bu (12,200 l)**
Tank Screens	Standard	Standard
Tank Access Ladder R.H.S.	Standard	Standard
Rated Fan Speed	17" fan - up to 5,000 r.p.m.	17" fan - up to 5,000 r.p.m.
Fan Impeller Diameter	17" (43 cm)	17" (43 cm)
Hydraulic Drive - piston type orbit motor (Closed Centre or Closed Centre Load Sensing systems required) Hydraulic requirements for Air Cart only at Rated Fan Speed.	16cc 21 U.S. gal./min. (80 l/min) at 2,750 p.s.i. (18,960 kpa) VRT requires an additional 5.5 U.S. gal/min (21 l/min)	16cc 21 U.S. gal./min. (80 l/min) at 2,750 p.s.i. (18,960 kpa) VRT requires an additional 5.5 U.S. gal/min (21 l/min)
Loading Auger	Standard (10" Dia x 21' Lg.) (0.25m Dia x 6.4m Lg.)	Standard (10" Dia x 21' Lg.) (0.25m Dia x 6.4m Lg.)
Quad Steer	N/A	Optional
Tires - Standard (Front)	N/A	(2) 21.5 x 16.1 - 10 ply rating Soft Trac
Tires - Optional (Front)	N/A	(2) 21.5 x 16.1 - 12 ply rating Lug (2) 560/65 D24 LI 140 Soft Trac (2) 500/70 R24 Lug
Tires - Quad Steer (Front)	N/A	(2) 480/70 R30 Lug
Tires - Standard (Rear)	(2) 30.5 x 32 - 12 ply rating AWT	(2) 23.1 x 26 - 12 ply rating AWT
Tires - Optional (Rear)	(2) 800/65 R32 - LI 172 Lug (2) 900/65 R32 - LI 172 Lug	(2) 23.1 x 26 - 10 ply rating Rice (2) 30.5 x 32 - 12 ply rating AWT (2) 800/65 R32 - LI 172 Lug (2) 900/65 R32 - LI 172 Lug
Metering - Ground Driven	Standard	Standard
Metering - Variable Rate (VRT)	Optional	Optional
Metering - GPS Compatible VRT	Optional	Optional
Meter Shut Off	Electric	Electric
Number Secondary Runs - Single Shoot	21 to 99	21 to 99
Number Secondary Runs - Double Shoot	42 to 198	42 to 198
Number Secondary Runs - Triple Shoot	63 to 297	63 to 297
Primary Hose - Diameter	2 1/2" (6.4 cm)	2 1/2" (6.4 cm)
Secondary Hose - Diameter	Standard - 15/16" (2.4 cm) Optional - 1 1/4" (3.2 cm)	Standard - 15/16" (2.4 cm) Optional - 1 1/4" (3.2 cm)
Frame	Formed heavy wall 4" x 10" (10 cm x 25.4 cm) tubing	Formed heavy wall 4" x 10" (10 cm x 25.4 cm) tubing
Walk Through Tank	Standard	Standard
Easy Clean Out System	Standard	Standard
Meter Drive Options -Second Clutch (For spot fertilizing on the go)	Standard	Standard
Monitor (Shaft Motion (3), Bin Level (3), Fan Speed, Acre Tally, Ground Speed)	Standard Optional Seed Flow	Standard Optional Seed Flow
Work Switch (Mounted to Seeding Machine)	Optional (Ground Drive Only)	Optional (Ground Drive Only)
Rear Tow Hitch	Standard (Max 26,000 lb Draft Load) (Max 11,818 kg Draft Load)	Optional (Max 15,000 lb Draft Load) (Max 6,818 kg Draft Load)
Mechanical Acre Meter	Optional (Ground Drive Only)	Optional (Ground Drive Only)
Hitch Stand	N/A	Optional

8370XL
Specifications and Options

Model	8370XL	8370XL
Configuration	**Tow Between**	**Tow Behind**
Length without auger (with auger)	23' 4" (7.14m) (24' 7" (7.49m))	23' 4" (7.14m) (24' 7" (7.49m))
Height	15' (4.57m)	15' (4.57m)
Width	13' 4" (4.06m)	13' 4" (4.06m)
Weight (Hydraulic Drive)	13,618 lbs. with 3rd tank	10,440 lbs. (4,745 kg)
Safety Lights	Standard	Standard
Safety Chain	Standard	Standard
Tank Capacity - Front Tank	Optional 83 bu (2,938 l)	Optional 83 bu (2,938 l)
Tank Capacity - Middle Tank	174 bu (6,184 l)	174 bu (6,184 l)
Tank Capacity - Rear Tank	186 bu (6,537 l)	186 bu (6,537 l)
Tank Capacity - Total	**360 bu (12,721 l)**	**360 bu (12,721 l)**
Tank Screens	Standard	Standard
Tank Access Ladder R.H.S.	Standard	Standard
Rated Fan Speed	17" fan - up to 5,000 r.p.m.	17" fan - up to 5,000 r.p.m.
Fan Impeller Diameter	17" (43 cm)	17" (43 cm)
Hydraulic Drive - piston type orbit motor (Closed Centre or Closed Centre Load Sensing systems required) Hydraulic requirements for Air Cart only at Rated Fan Speed.	16cc 21 U.S. gal./min. (80 l/min) at 2,750 p.s.i. (18,960 kpa) VRT requires an additional 5.5 U.S. gal/min (21 l/min)	16cc 21 U.S. gal./min. (80 l/min) at 2,750 p.s.i. (18,960 kpa) VRT requires an additional 5.5 U.S. gal/min (21 l/min)
Loading Auger	Standard (10" Dia x 21' Lg.) (0.25m Dia x 6.4m Lg.)	Standard (10" Dia x 21' Lg.) (0.25m Dia x 6.4m Lg.)
Quad Steer	N/A	Optional
Tires - Standard (Front)	N/A	(2) 500/70 R24 Lug Distance Center-Center 40" (102 cm)
Tires - Quad Steer (Front)	N/A	(2) 480/70 R30 Lug Distance Center-Center 124" (315 cm)
Tires - Standard (Rear)	(2) 800/65 R32 - LI 172 Lug Distance Center-Center 128" (325 cm)	(2) 800/65 R32 - LI 172 Lug Distance Center-Center 128" (325 cm)
Tires - Optional (Rear)	(2) 900/65 R32 - LI 172 Lug Distance Center-Center 132" (335 cm) Duals - (4) 520/85 R38 Lug Distance Center-Center Inner 119" (302 cm) Distance Center-Center Outer 171" (434 cm)	(2) 900/65 R32 - LI 172 Lug Distance Center-Center 132" (335 cm) Duals - (4) 520/85 R38 Lug Distance Center-Center Inner 119" (302 cm) Distance Center-Center Outer 171" (434 cm)
Metering - Ground Driven	Standard	Standard
Metering - Variable Rate (VRT)	Optional	Optional
Metering - GPS Compatible VRT	Optional	Optional
Meter Shut Off	Electric	Electric
Number Secondary Runs - Single Shoot	21 to 99	21 to 99
Number Secondary Runs - Double Shoot	42 to 198	42 to 198
Number Secondary Runs - Triple Shoot	63 to 297	63 to 297
Primary Hose - Diameter	2 1/2" (6.4 cm)	2 1/2" (6.4 cm)
Secondary Hose - Diameter	Standard - 15/16" (2.4 cm) Optional - 1 1/8" (2.8 cm)	Standard - 15/16" (2.4 cm) Optional - 1 1/8" (2.8 cm)
Frame	Formed heavy wall 4" x 10" (10 cm x 25.4 cm) tubing	Formed heavy wall 4" x 10" (10 cm x 25.4 cm) tubing
Walk Through Tank	Standard	Standard
Easy Clean Out System	Standard	Standard
Meter Drive Options -Second Clutch (For spot fertilizing on the go)	Standard	Standard
Monitor (Shaft Motion (3), Bin Level (3), Fan Speed, Acre Tally, Ground Speed)	Standard Optional Seed Flow	Standard Optional Seed Flow
Work Switch (Mounted to Seeding Machine)	Optional	Optional
Rear Tow Hitch	Standard (Max 26,000 lb Draft Load) (Max 11,818 kg Draft Load)	Optional (Max 15,000 lb Draft Load) (Max 6,818 kg Draft Load)
Mechanical Acre Meter	Optional (Ground Drive Only)	Optional (Ground Drive Only)
Hitch Stand	N/A	Optional

8425XL
Specifications and Options

Model	8425XL	8425XL
Configuration	**Tow Between**	**Tow Behind**
Length without auger (with auger)	23' 4" (7.14m) (24' 7" (7.49m))	23' 4" (7.14m) (24' 7" (7.49m))
Height	13' 4" (4.06)	13' 4" (4.06)
Width	13' 4" (4.06)	13' 4" (4.06)
Weight (Hydraulic Drive)		11,500 lbs. (5,227 kg)
Safety Lights	Standard	Standard
Safety Chain	Standard	Standard
Tank Capacity - Front Tank	130 bu (4,559 l)	130 bu (4,559 l)
Tank Capacity - Middle Tank	117 bu (4,126 l)	117 bu (4,126 l)
Tank Capacity - Rear Tank	186 bu (6,537 l)	186 bu (6,537 l)
Tank Capacity - Total	**433 bu (15,222 l)**	**433 bu (15,222 l)**
Tank Screens	Standard	Standard
Tank Access Ladder R.H.S.	Standard	Standard
Rated Fan Speed	17" fan - up to 5,000 r.p.m.	17" fan - up to 5,000 r.p.m.
Fan Impeller Diameter	17" (43 cm)	17" (43 cm)
Hydraulic Drive - piston type orbit motor (Closed Centre or Closed Centre Load Sensing systems required) Hydraulic requirements for Air Cart only at Rated Fan Speed.	16cc 21 U.S. gal./min. (80 l/min) at 2,750 p.s.i. (18,960 kpa) VRT requires an additional 5.5 U.S. gal/min (21 l/min)	16cc 21 U.S. gal./min. (80 l/min) at 2,750 p.s.i. (18,960 kpa) VRT requires an additional 5.5 U.S. gal/min (21 l/min)
Loading Auger	Standard (10" Dia x 21' Lg.) (0.25m Dia x 6.4m Lg.)	Standard (10" Dia x 21' Lg.) (0.25m Dia x 6.4m Lg.)
Quad Steer	N/A	Optional
Tires - Standard (Front)	N/A	(2) 560/65 D24 - LI 140 Soft Trac
Tires - Optional (Front)	N/A	(2) 500/70 R24 Lug
Tires - Quad Steer (Front)	N/A	(2) 480/70 R30 Lug
Tires - Standard (Rear)	(2) 800/65 R32 - LI 172 Lug	(2) 30.5 x 32 - 12 ply rating AWT
Tires - Optional (Rear)	(2) 900/65 R32 - LI 172 Lug	(2) 800/65 R32 - LI 172 Lug (2) 900/65 R32 - LI 172 Lug
Metering - Ground Driven	Standard	Standard
Metering - Variable Rate (VRT)	Optional	Optional
Metering - GPS Compatible VRT	Optional	Optional
Meter Shut Off	Electric	Electric
Number Secondary Runs - Single Shoot	21 to 99	21 to 99
Number Secondary Runs - Double Shoot	42 to 198	42 to 198
Number Secondary Runs - Triple Shoot	63 to 297	63 to 297
Primary Hose - Diameter	2 1/2" (6.4 cm)	2 1/2" (6.4 cm)
Secondary Hose - Diameter	Standard - 15/16" (2.4 cm) Optional - 1 1/4" (3.2 cm)	Standard - 15/16" (2.4 cm) Optional - 1 1/4" (3.2 cm)
Frame	Formed heavy wall 4" x 10" (10 cm x 25.4 cm) tubing	Formed heavy wall 4" x 10" (10 cm x 25.4 cm) tubing
Walk Through Tank	Standard	Standard
Easy Clean Out System	Standard	Standard
Meter Drive Options -Second Clutch (For spot fertilizing on the go)	Standard	Standard
Monitor (Shaft Motion (3), Bin Level (3), Fan Speed, Acre Tally, Ground Speed)	Standard Optional Seed Flow	Standard Optional Seed Flow
Work Switch (Mounted to Seeding Machine)	Optional (Ground Drive Only)	Optional (Ground Drive Only)
Rear Tow Hitch	Standard (Max 26,000 lb Draft Load) (Max 11,818 kg Draft Load)	Optional (Max 15,000 lb Draft Load) (Max 6,818 kg Draft Load)
Mechanical Acre Meter	Optional (Ground Drive Only)	Optional (Ground Drive Only)
Hitch Stand	N/A	Optional

8435XL, 8630XL and 8650XL - Tow Behind
Specifications and Options

Model	8435XL	8630XL	8650XL
Configuration	**Tow Behind**	**Tow Behind**	**Tow Behind**
Length from Quad Steer hitch pin to fan	36' 7" (11.15 m)	36' 7" (11.15 m)	36' 7" (11.15 m)
Height	13' 8" (4.16 m)	13' 8" (4.16 m)	13' 8" (4.16 m)
Width - Single Axle	13' 10" (4.22 m)	13' 10" (4.22 m)	13' 10" (4.22 m)
- Dual Axle	15' 11" (4.81 m)	15' 11" (4.81 m)	15' 11" (4.81 m)
Weight	16,890 lbs (7,661 kg)	18,000 lbs (8,165 kg)	18,250 lbs (8,278 kg)
Safety Lights	Standard	Standard	Standard
Safety Chain	Standard	Standard	Standard
Tank Capacity - Tank 1	N/A	190 bu (6,695 l)	190 bu (6,695 l)
- Tank 2	N/A	N/A	28 bu (987 l)
- Tank 3	203 bu (7,154 l)	203 bu (7,154 l)	203 bu (7,154 l)
- Tank 4	232 bu (8,175 l)	232 bu (8,175 l)	232 bu (8,175 l)
- Total	**435 bu (15,329 l)**	**625 bu (22,024 l)**	**653 bu (23,011 l)**
Tank Screens	Standard		
Tank Access Ladder R.H.S.	Standard		
Rated Fan Speed	17" fan - up to 5,000 r.p.m.		
Fan Impeller Diameter	Standard 17" (43 cm)		
Hydraulic Drive - piston type orbit motor (Closed Centre or Closed Centre Load Sensing systems required) Hydraulic requirements for Air Cart only at Rated Fan Speed.	16cc 21 U.S. gal./min. (80 l/min) at 2,750 p.s.i. (18,960 kpa) VRT requires an additional 5.5 U.S. gal/min (21 l/min)		
Loading Auger	Standard (10" Dia) (25.4 cm Dia)		
Loading Conveyor	Optional		
Quad Steer	Standard		
Tires - Quad Steer (Front)	(2) 28LR26 Lug Distance Center-Center Inner 138" (351 cm)		
- Standard (Rear)	(2) 900/65 R32 - LI 172 Lug Distance Center-Center Inner 132" (335 cm)		
- Optional (Rear)	Duals - (4) 520/85 R38 Lug Distance Center-Center Inner 119" (302 cm) Distance Center-Center Outer 171" (434 cm)		
Metering - Ground Driven	Standard		
- Variable Rate (VRT)	Optional		
- GPS Compatible VRT	Optional		
Meter Shut Off	Electric		
Number Secondary Runs - Single Shoot	21 to 99		
Number Secondary Runs - Double Shoot	42 to 198		
Number Secondary Runs - Triple Shoot	Subject to availability		
Primary Hose - Diameter	2 1/2" (6.4 cm)		
Secondary Hose - Diameter	Standard - 15/16" (2.4 cm) Optional - 1 1/8" (2.8 cm)		
Frame - Trussed	4" x 6" (10 cm x 15.2cm) tubing by 4" x 4" (10 cm x 10 cm) tubing		
Walk Through Tank	Standard		
Easy Clean Out System	Standard		
Meter Drive Options -Second Clutch (For spot fertilizing on the go)	Standard		
Monitor (Shaft Motion (4), Bin Level (4), Fan Speed, Acre Tally, Ground Speed)	Standard Optional Seed Flow		
Work Switch (Mounted to Seeding Machine)	Optional		
Rear Tow Hitch	Optional (Max 15,000 lb Draft Load) (Max 6,818 kg Draft Load)		
Mechanical Acre Meter	Optional (Ground Drive Only)		

Specifications are estimates and subject to change.

8435XL, 8630XL and 8650XL - Tow Between
Specifications and Options

Model	8435XL	8630XL	8650XL
Configuration	**Tow Between**	**Tow Between**	**Tow Between**
Length from hitch pin to end of Auger	33' (10.06 m)	33' (10.06 m)	33' (10.06 m)
Height	13' 8" (4.16 m)	13' 8" (4.16 m)	13' 8" (4.16 m)
Width - Dual Axle	20' (6.10 m)	20' (6.10 m)	20' (6.10 m)
Weight	19,580 lbs (8881 kg)	20,690 lbs (9385 kg)	20,940 lbs (9500 kg)
Safety Lights	Standard	Standard	Standard
Safety Chain	Standard	Standard	Standard
Tank Capacity - Tank 1	N/A	190 bu (6,695 l)	190 bu (6,695 l)
- Tank 2	N/A	N/A	28 bu (987 l)
- Tank 3	203 bu (7,154 l)	203 bu (7,154 l)	203 bu (7,154 l)
- Tank 4	232 bu (8,175 l)	232 bu (8,175 l)	232 bu (8,175 l)
- Total	**435 bu (15,329 l)**	**625 bu (22,024 l)**	**653 bu (23,011 l)**
Tank Screens	Standard		
Tank Access Ladder R.H.S.	Standard		
Rated Fan Speed	17" fan - up to 5,000 r.p.m.		
Fan Impeller Diameter	Standard 17" (43 cm)		
Hydraulic Drive - piston type orbit motor (Closed Centre or Closed Centre Load Sensing systems required) Hydraulic requirements for Air Cart only at Rated Fan Speed.	16cc 21 U.S. gal./min. (80 l/min) at 2,750 p.s.i. (18,960 kpa) VRT requires an additional 5.5 U.S. gal/min (21 l/min)		
Loading Auger	Standard (10" Dia) (25.4 cm Dia)		
Loading Conveyor	Optional		
Tires - Standard (Rear)	Duals - (4) 800/65 R32 - LI 172 Lug Distance Center-Center Inner 132" (335 cm) Distance Center-Center Outer 208" (516 cm)		
Metering - Ground Driven	Standard		
- Variable Rate (VRT)	Optional		
- GPS Compatible VRT	Optional		
Meter Shut Off	Electric		
Number Secondary Runs - Single Shoot	21 to 99		
Number Secondary Runs - Double Shoot	42 to 198		
Number Secondary Runs - Triple Shoot	Subject to availability		
Primary Hose - Diameter	2 1/2" (6.4 cm)		
Secondary Hose - Diameter	Standard - 15/16" (2.4 cm) Optional - 1 1/8" (2.8 cm)		
Frame - Trussed	4" x 6" (10 cm x 15.2cm) tubing by 4" x 4" (10 cm x 10 cm) tubing		
Walk Through Tank	Standard		
Easy Clean Out System	Standard		
Meter Drive Options -Second Clutch (For spot fertilizing on the go)	Standard		
Monitor (Shaft Motion (4), Bin Level (4), Fan Speed, Acre Tally, Ground Speed)	Standard Optional Seed Flow		
Work Switch (Mounted to Seeding Machine)	Optional		
Rear Tow Hitch	Standard (Max 15,000 lb Draft Load) (Max 6,818 kg Draft Load)		
Mechanical Acre Meter	Optional (Ground Drive Only)		

Specifications are estimates and subject to change.



8370XL with Third Tank



8650XL

Tank Lids

The lid seal is probably the area that sees the most abuse due to the activity associated with filling the tanks.

With each fill the lid seals should be inspected for cuts, abrasions, debris in the seal and ensure the seal is positioned properly on the steel rim around the tank opening.

Tank Lid Adjustment

Check Tank Lid tension on *all tanks* at beginning of each season and periodically during season for air leaks. The following checks and adjustments must be made to prevent air leaks from occurring:

- Check for any foreign material embedded into seal. Clean out foreign material from seal surface.
- Check seal for cuts and abrasions. If seal is cut or severely worn, then replace seal.
- Ensure that steel rim around tank opening has not been damaged or cracked at the weld. Silicone can be used to make minor repairs.
- Ensure seal is positioned properly on steel rim around tank opening.
- Use a 0 - 100 lb. (0-45 kg) spring scale to check the tank lid opening force. With the lid closed place one end of the scale *one inch* from the end of the tank lid lever. Pull straight up on the scale and note the maximum force it takes to open the lid. The force needed to open the lid ***must be greater than 65 lbs (29 kg).*** Adjust the lid latch adjusting bolt as necessary. The lid latch should close with a ***snap.*** This will ensure that the lid is sufficiently tight and prevent any leaks.
- Re-check for leaks. If lids still leak turn down bolt one or two more turns. Re-check for leaks.

Note: When air cart is not in use, leave lid latches loose to help maintain resilience of the seals.

Important

It is imperative that no air leaks occur in the air cart tank as even the smallest air leak from the lid will lead to material bridging in the tank thereby causing misses in the field.

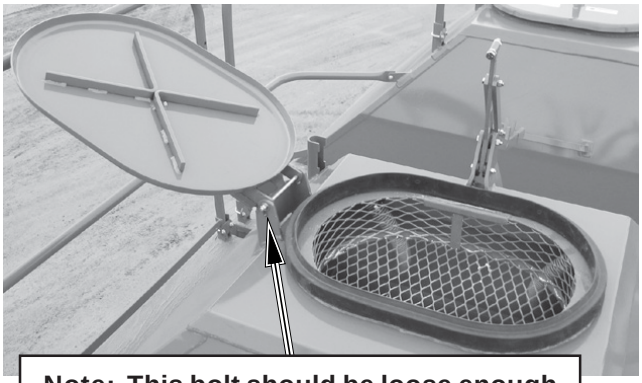

Note: This bolt should be loose enough to allow lid to float in the slot.

These bolts and lock nuts must be tightened to maintain a friction fit so the lid latch stays stationary when in open position.

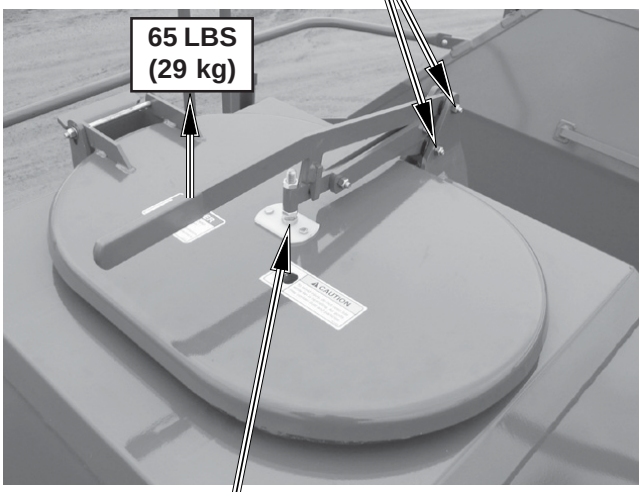

Adjust the lid latch bolt to obtain a force *greater than 65 lbs (29 kg)* **to open the lid.**

Tank Lids - Continued

Tank Lid Adjustment - Continued

8650 Air Cart 4th Tank

- Check for any foreign material embedded into seal. Clean out foreign material from seal surface.
- Check seal for cuts and abrasions. If seal is cut or severely worn, then replace seal.
- Ensure seal is positioned properly on steel rim around tank opening.
- Use a 0 - 100 lb. (0-45 kg) spring scale to check the tank lid opening force. With the lid closed place one end of the scale *one inch* from the end of the tank lid lever. Pull straight up on the scale and note the maximum force it takes to open the lid. The force needed to open the lid ***must be greater than 45 lbs (20 kg).*** Adjust the lid latch adjusting bolt as necessary.
- Re-check for leaks. If lids still leak turn down bolt one or two more turns. Re-check for leaks.

Note: Additional lid latch adjustment can be obtained with plate adjustment.

Note: When air cart is not in use, leave lid latches loose to help maintain resilience of the seals.

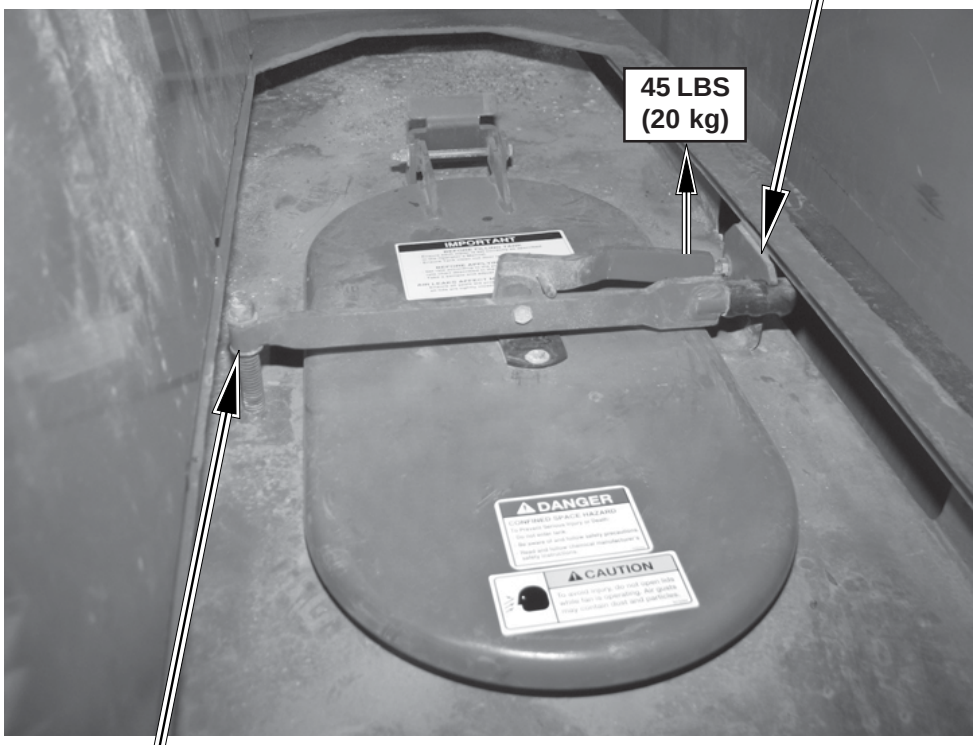

Load/Unload Auger

Removal Of Hydraulic Auger Motor

- Remove hydraulic lines from motor
- Remove 3/8 flange locknuts (8) fastening 1/4" mount plate (23) to auger assembly.
- Pull motor and plate away from auger assembly.
- At this point you can now:
  a. Replace the shear bolt (45)
  b. Replace the lower bushing at the base of the flighting.
  c. Continue on to replace the orbital motor seal.

Item	Part #	Description
25	N37047	Auger Motor
	N16731	Seal Kit
	N44278	Shaft
45	W-480	Shear Bolt
4	C22785	Bushing (not shown)

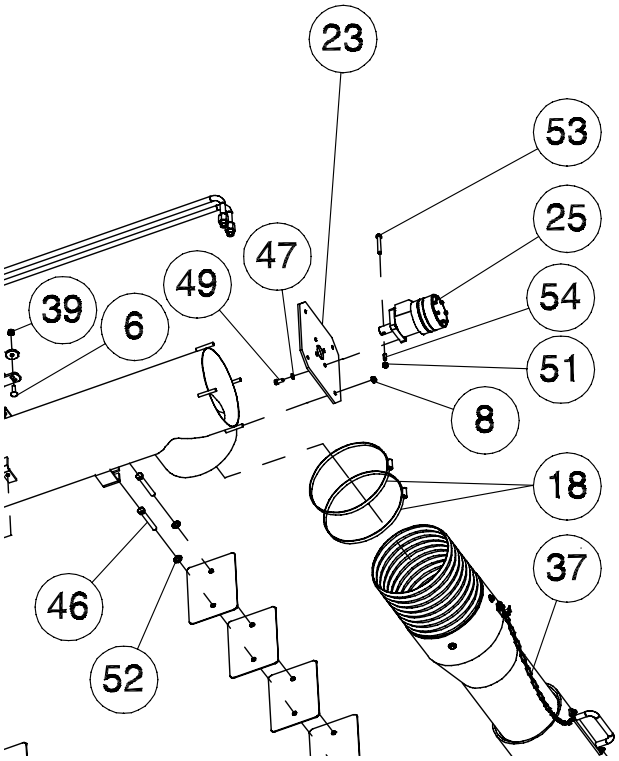

- The selector valve is to be pushed in to operate the fan and pulled out to run the auger.

***NOTE* If the auger continues to run while the selector valve is in the fan position, it is likely that the selector requires a new seal kit.**

N34506	Selector Valve
N31603	Seal Kit for N34506
C26358	Knob for N34506

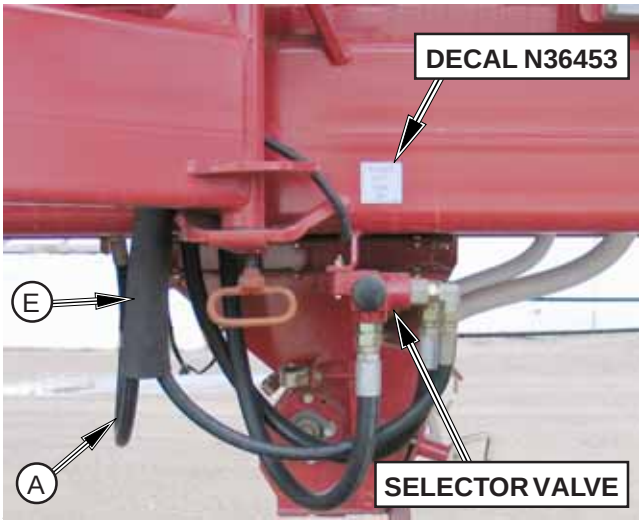

Figure 1 – Selector Valve For Tow Behind Carts

- The auger control valve will operate forwards when the handle is pulled downwards and in reverse when pulled upwards.

***NOTE* The direction of travel will be opposite to the direction of the handle.**

N34495	Control Valve
N31605	Seal Kit for N34495
N24595	Handle for N34495

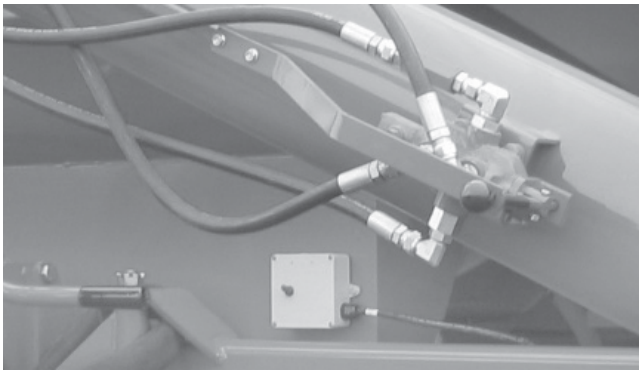

Load/Unload Auger - Continued



Front Lock - Standard



Front Lock - Optional

- Adjust the 3/8" nuts such that the lock handles snap firmly over center when they are placed in the locked position

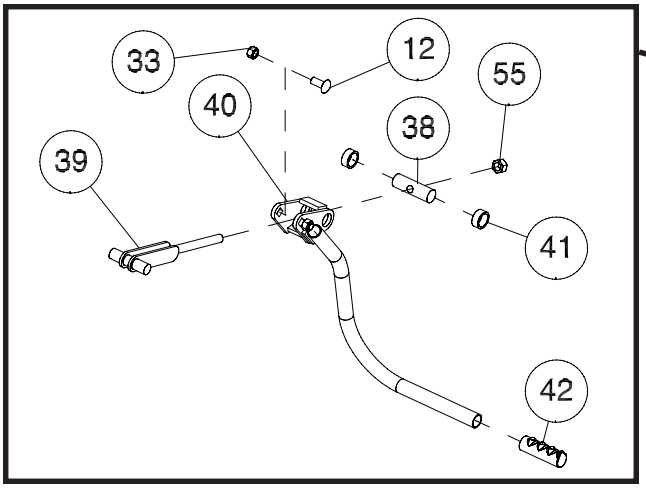

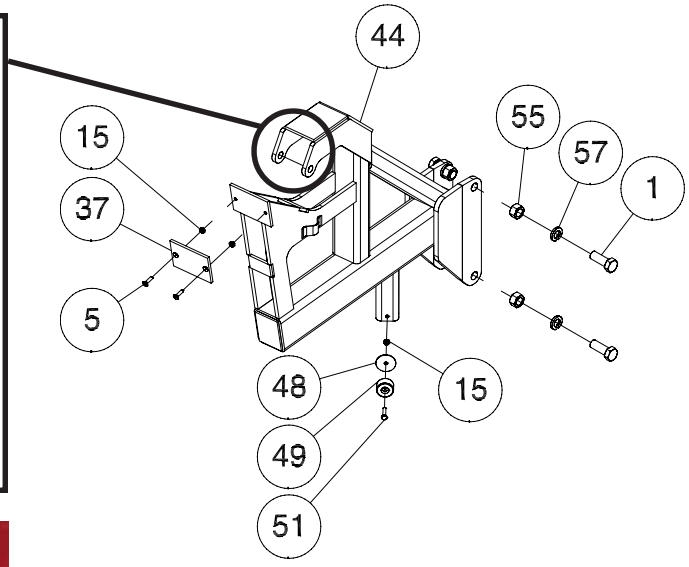



Arm Lock

Auger Lock Arm Detail

- Mount lever (40) to auger lock arm (44) with 5/8 x 1 1/2 Lg carriage bolt (12) and locknut (33).
- Insert latch pin (38) and bushings (41) then insert latch hook (39). Adjust latch hook with 3/4 hex nut (55) so the saddle plate presses snugly against the nylon pad.
- Add or remove shims (48) as required to rubber bumpers, so auger arms press snugly against bumpers when latched.

Load/Unload Auger - Continued

Auger Balancing Details

- Add counter weight plates (16) as necessary until the bottom of the auger is slightly heavier than the top of the auger. Check to make sure the auger will settle in the cradle arm without lifting up on its own.



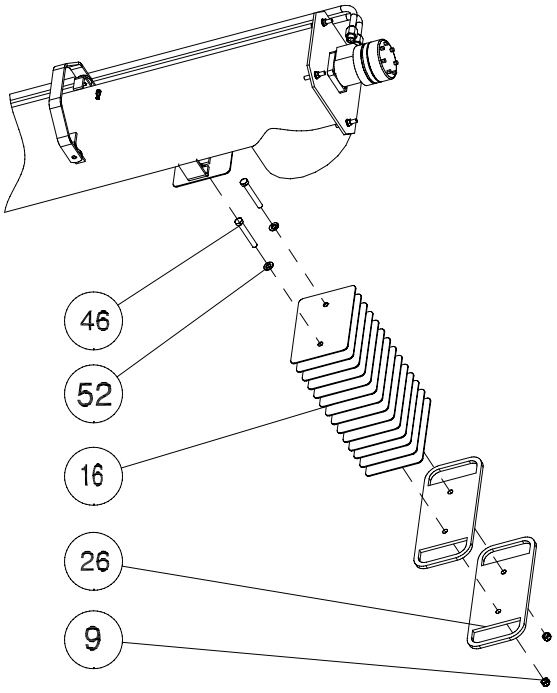

DETAIL
COUNTER-WEIGHT

Item	Part#	Description
9	F-3405	Locknut – ½" Unitorque
16	N36370	Counter Weight Plate
26	N37140	Auger Handle Plate
46	W-490	Hex Bolt – ½" X 2 ½" Lg.
52	S-1925	Flat Washer ½"



Auger locks

- Transport lug is to be flipped to the lower position and locked using the safety snap pin. This will prevent unwanted movement of the hopper during transport.

Fan and Plenum

Hydraulic Fan Drive

The piston type orbit motor on the fan requires tractor to have either a load sensing hydraulic system or a closed centre hydraulic system with flow control.

The flow required is 18 U.S. gpm (68 liters) for the 12 cc motor and 21 U.S. gpm (80 liters) for the 16 cc motor at a pressure of 2,750 p.s.i. (18,960 kPa) However, smaller flows can be used depending on the product being metered.

For correct operation of the fan the hydraulic motor must be coupled to the priority valve (if tractor is so equipped) in the hydraulic valve bank.

Check with the tractor manual or manufacturer to determine if or which spool is a *"priority valve"*.

Speed fluctuations will result if the fan is not connected to the priority valve if hydraulic system is equipped with a priority valve.

Ensure couplers are free of dirt and are clean when connecting the fan hydraulics to the tractor.

Fan speed is adjusted by increasing the amount of oil being delivered to the motor. This is done by adjusting the respective flow control valve until the desired rpm is displayed on the monitor.

Note: There is a one-way check valve installed in the hydraulic circuit. If the fan does not rotate, then move hydraulic lever in the opposite direction; this will engage the fan. This valve prevents damage to the hydraulic systems when the fan is shut OFF, by allowing the fan to freewheel.

A piston motor creates leakage past the internal components for lubrication. This oil needs to go back to the oil reservoir at the lowest pressure possible. The motor has a 3/8" diameter drain line. This line must be connected directly into the tractor hydraulic reservoir to ensure that there is zero back pressure in the drainline, otherwise damage will result to the motor.



Hydraulic Drive

IMPORTANT

Run hydraulic fan drive at lowest rpm possible (1,000-2,000) for 5-10 minutes before operating at set rpm. This is required to warm up the hydraulic fluid. Cold hydraulic fluid will cause pressure spikes in the system that will damage the case drain seal in the orbit motor.

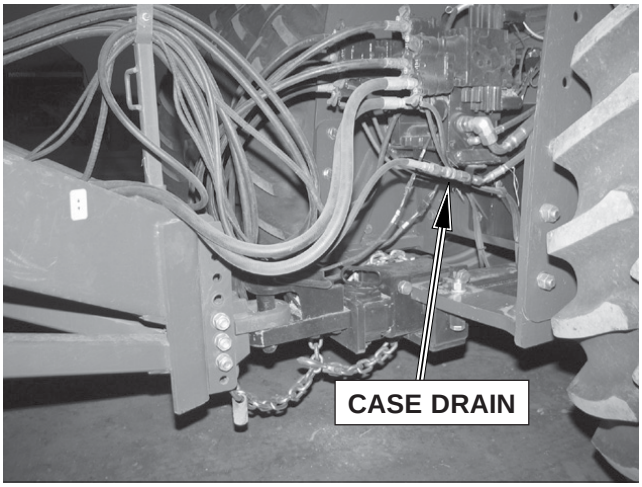

Hydraulic Coupling on Tractor

Fan and Plenum - Continued

Fan

Debris can build up on the fan screen and blades causing reduced output of the fan. The lack of air flow even at higher fan speeds will cause material plugging of the air system.

The build up of material during operation can cause the following:

1. Fan rpm will increase without increasing oil flow to orbit motor.
2. Air cart distribution system plugging from a lack of air flow (Increasing fan rpm has little or no effect).

Fan Screen

- Ensure fan screen is clear of debris. Check periodically through the day.

Fan Impeller

The fan blades may become plugged under high humidity/dusty conditions/high insect counts.

Under severe conditions the fan blades should be inspected daily and cleaned as required.

Under normal conditions the fan should be inspected and cleaned at least once a season.

- Care should be taken in cleaning all fan blades thoroughly to restore the fans peak performance.
- Ensure that the balance clips located on the fan blades are not removed, as this will put the fan out of balance.

Storage

To prevent water entering the air system, cover the fan intake with a plastic bag, whenever the seeder is not in use.

Note: Be sure to remove fan cover prior to starting fan or serious damage could result to the fan.

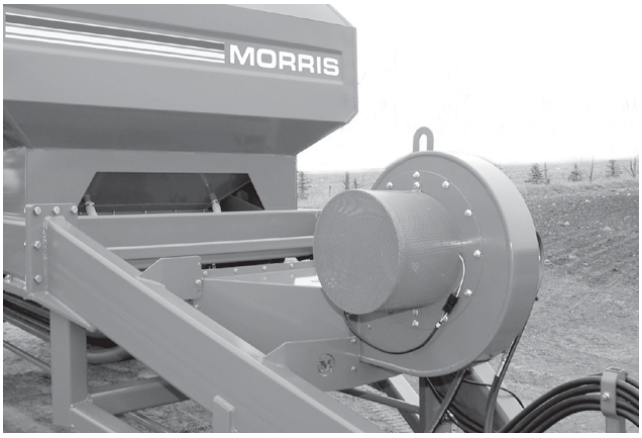

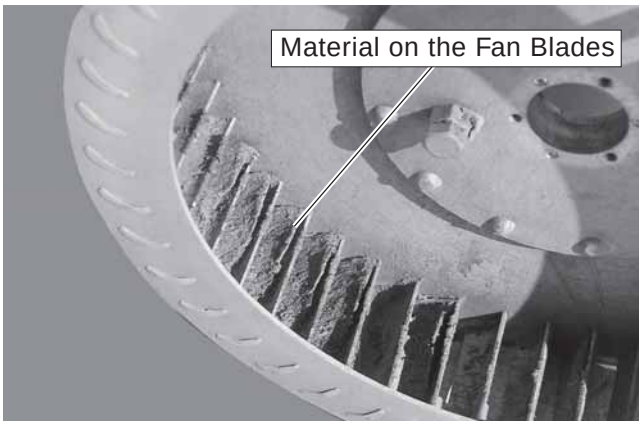

Note: Material build up on the fan blades could cause the fan to be out of balance. The added vibration of the out of balance impeller will reduce the life of the fan components.

Fan and Plenum - Continued

Rotor Clearance

- Position rotor 1/8” (3 mm) from inlet.
- Check rotor alignment if tipped at an angle to the inlet adjust inner bearing on blower housing to achieve proper rotor to inlet concentricity.
- If rotor is square to inlet but not concentric to inlet, raise or lower the inlet on the mounting bolts.
- Spin rotor by hand to check for interferences, adjust as required.

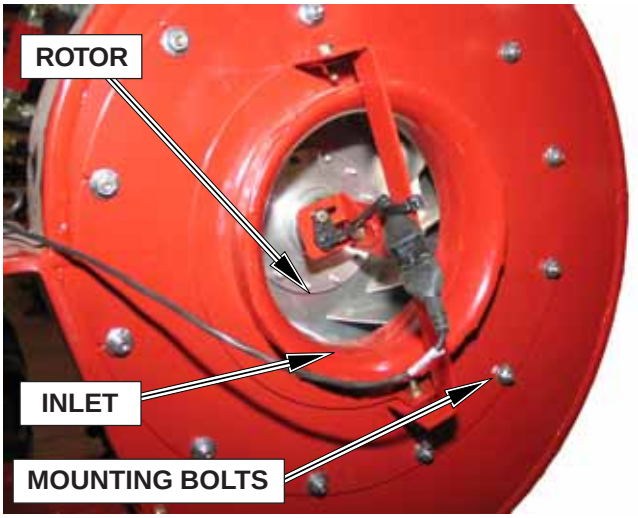

Hoses

Inspect air delivery hoses for wear and replace as required. Check areas where hoses may be exposed to moving parts such as hitch hinge area.

Also, inspect hoses for blockage as rodents/birds may nest in hoses that have not been properly capped during storage.

To optimize the EIGHT Series XL Air Cart air system the pressure across the inlets of the quick couplers should be balanced. To achieve this all primary hoses **must be equal in length or use equalizers** to achieve a balanced air system.

Consult with your MORRIS Dealer for assistance on hose lengths and location of equalizers.

Important

ALL primary hoses must be the same length or use equalizers to achieve a balanced air system.

Fan and Plenum - Continued

Equalizers

The equalizers reduce the amount of primary hose required to balance the air system of the air cart.

- Equalizers are installed on the shorter primary hoses of the seeding tool. Consult with your MORRIS Dealer for assistance on hose lengths and location of equalizers.
- Check equalizers seasonally for wear. If flat section is gone replace equalizer.



Coupler on Seeding Tool





Insert Equlizers on Coupler Seeding Tool side

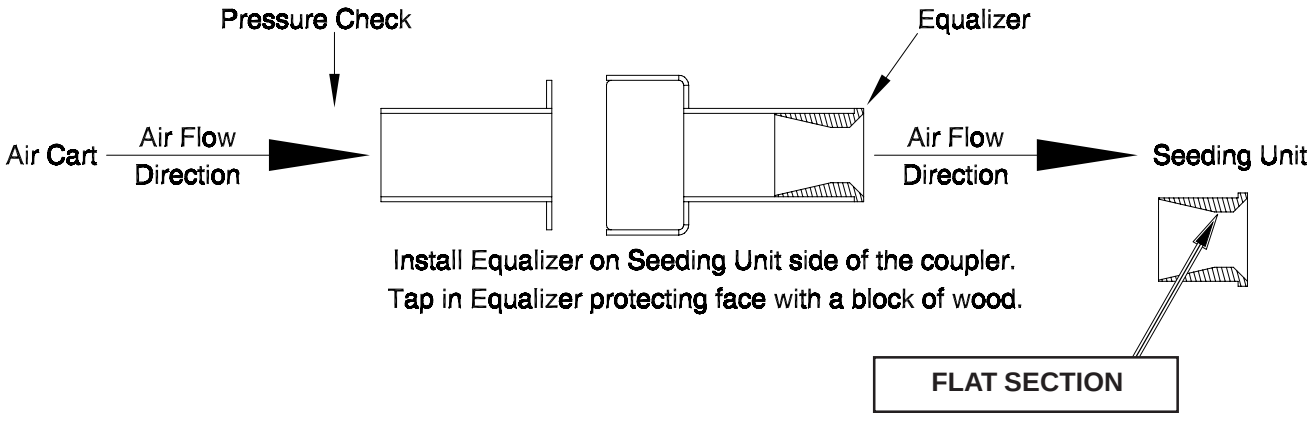

Fan and Plenum - Continued

Hydraulic Orbit Motor

The motor requires no maintenance itself.

It does, however, require clean oil so the tractor hydraulic filters must be replaced regularly.

Repair/Replacement

- Remove orbit motor from the fan.

Note: The shaft should never be hammered on or forced in as this will result in motor damage upon startup.

- Remove the snap ring.
- Clean away paint then remove front cover.
- Push out the old shaft seal and press in the new one.

Note: The bearings should never be removed from the shaft as they are pretensioned to the shaft with the motor spinning.

- Replace the O-ring.
- Both the O-ring and shaft seal should be greased with *"clean"* grease.
- Care must be taken when the front cover is installed so the shaft seal is not damaged.
- Reinstall the snap ring.
- Fill the motor case with *"clean"* oil before running.

Note: Any time a motor is replaced the case must be filled with oil before it is started, if not, a bearing failure could occur.

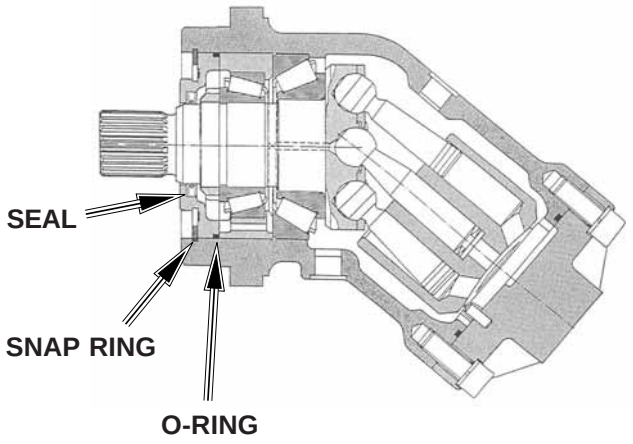

Orbit Motor Coupler (17" Diameter Fan only)

- Urethane insert should be inspected every 100 hours or when greasing bearings.
- Inspect that there are no urethane filings or niks or cracks in urethane insert.
- Ensure set screws in each half of the coupler are tight.

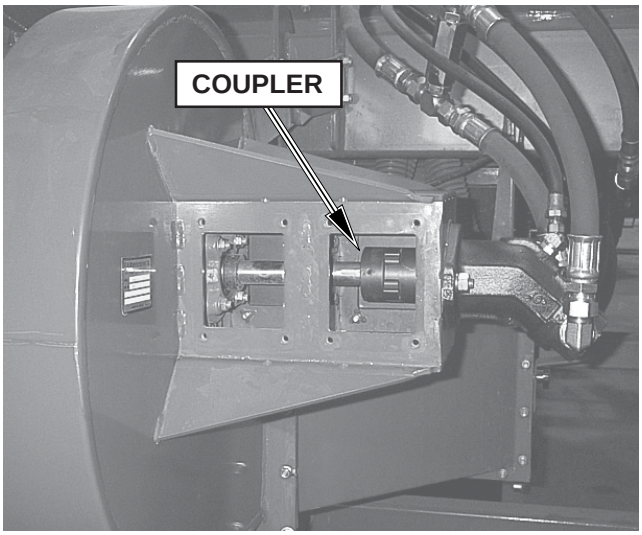

Coupler

Fan and Plenum - Continued

Set Plenum Damper so that setting is in the middle of slot.
This Damper is set at the 2 position.

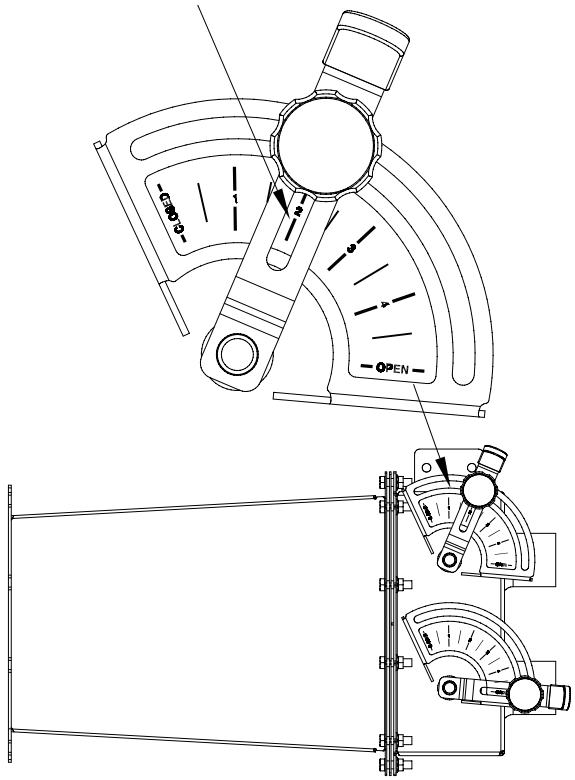

Suggested Plenum Settings				
Product	**Seed**		**Fertilizer**	
	Rate lb/acre	**Damper Setting**	**Rate lb/acre**	**Damper Setting**
Fine Seeds	All Rates	1	All Rates	Open
Coarse Grains	90 lb (100 kg/ha)	Open	50 lb (56 kg/ha)	2
	90 lb (100 kg/ha)	4	100 lb (112 kg/lb)	Open
	90 lb (100 kg/ha)	3	150 + lb (168 kg/ha	Open
Large Seeds	180 lb (200 kg/ha)	Open	40 lb (45 kg/ha)	2
Single Shoot	**Lower Pipes** - Top Damper Closed - Bottom Damper Open			
	Upper Pipes - Top Damper Open - Bottom Damper Closed			

Note: See "Fan Speeds" for Fan RPM.

Fan Speed Recommendations

Adequate air volume is necessary at all times to carry the product in the air stream. Air volume can be controlled by adjusting hydraulic oil flow on hydraulic fan drives or adjusting engine speed on engine fan drive models.

Air volume; hence fan speed requirements will vary with:

1. Ground speed
2. Metering rate
3. Number of primary runs
4. Width of machine
5. Density and size of material

Excessive fan speed can cause seed damage, seed bouncing and premature wear of the system.

Generally fan speed is adequate if product flows through the hoses without surging and the hoses empty quickly and evenly when the system shuts down.

The charts on the next page list *suggested fan speeds* for various application rates.

Note: The charts should be used only as a guide. If plugging or surging occurs increase the fan speed to eliminate the problem.

Note: It is recommended that after a rain or dew the fan be run two to three minutes to expel any moisture in the system.

Important

Keep fan impeller blades clean at all times.

Note: Once fan speed is properly set, be sure to adjust the monitor fan alarm setting accordingly. See Monitor Section "Monitor Programming".

Fan and Plenum - Continued

Fan Speed Recommendations

Charts are based on a 40 foot machine traveling at 5 mph (8 kph).

17 inch Diameter Impeller Suggested Fan RPM @ 5 mph (8 kph) on a 41 ft unit		
Combined Application Rate	**Fan Speed Setting**	
	Single Shoot	**Double Shoot**
3 - 50 lbs/acre 3 - 56 kg/ha	3000 - 3250 RPM	2900 - 3150 RPM
50 - 100 lbs/acre 56 112 kg/ha	3250 - 3500 RPM	3150 - 3400 RPM
100 - 150 lbs/acre 112 - 168 kg/ha	3500 - 3750 RPM	3400 - 3650 RPM
150 - 200 lbs/acre 168 - 224 kg/ha	3750 - 4000 RPM	3650 - 3900 RPM
200 - 250 lbs/acre 224 - 280 kg/ha	4000 - 4250 RPM	3900 - 4150 RPM
250 - 300 lbs/acre 280 - 336 kg/ha	4250 - 4500 RPM	4150 - 4400 RPM
300 - 350 lbs/acre 336 - 392 kg/ha	4500 - 4750 RPM	4400 - 4650 RPM
> 350 lbs/acre > 392 kg/ha	4750 - 5000 RPM	4650 - 4900 RPM
Note:	**Fan Speeds given are when applying product. It is normal for fan speed to drop when not applying product.**	

17 inch Diameter Impeller Suggested Fan RPM @4.5 mph (7.2 kph) on a 71 ft unit		
Combined Application Rate	**Fan Speed Setting**	
	Single Shoot	**Double Shoot**
3 - 50 lbs/acre 3 - 56 kg/ha	3250 - 3500 RPM	3000 - 3250 RPM
50 - 100 lbs/acre 56 112 kg/ha	3500 - 3750 RPM	3250 - 3500 RPM
100 - 150 lbs/acre 112 - 168 kg/ha	3750 - 4000 RPM	3500 - 3750 RPM
150 - 200 lbs/acre 168 - 224 kg/ha	4000 - 4250 RPM	3750 - 4000 RPM
200 - 250 lbs/acre 224 - 280 kg/ha	4250 - 4500 RPM	4000 - 4250 RPM
250 - 300 lbs/acre 280 - 336 kg/ha	4500 - 4750 RPM	4250 - 4500 RPM
300 - 350 lbs/acre 336 - 392 kg/ha	4750 - 5000 RPM	4500 - 4750 RPM
> 350 lbs/acre > 392 kg/ha	-	4750 - 5000 RPM
Note:	**Fan Speeds given are when applying product. It is normal for fan speed to drop when not applying product.**	

Rem Fan - Hydraulic Drive

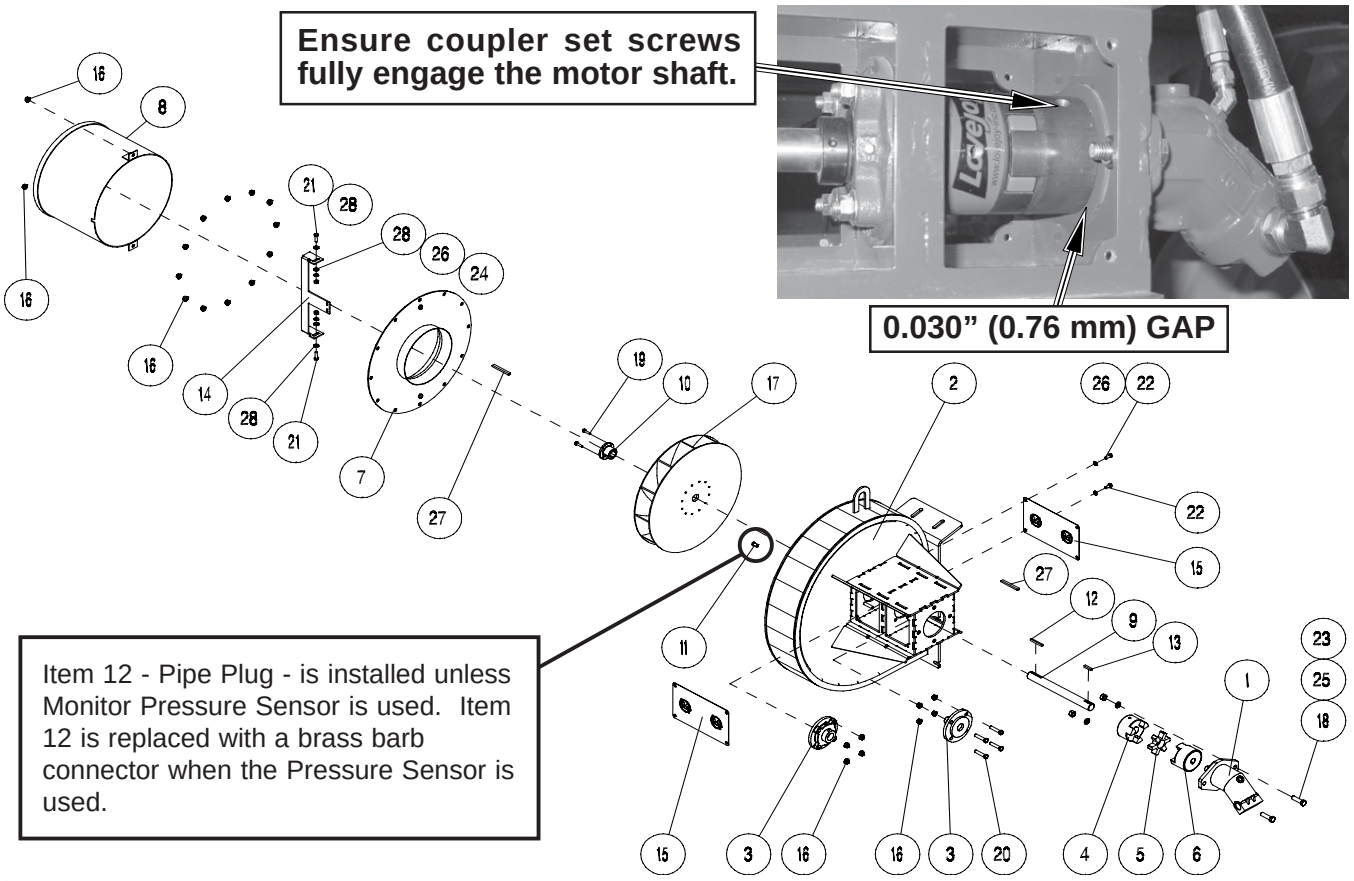

Item	Part No.	Description	Qty
1	N29372	Hydraulic Motor - 12cc - 20mm shaft (Tow Between Only)	1
	N37742	Hydraulic Motor - 16cc - 20mm shaft	1
2	N37802	Blower Housing	1
3	N37810	Bearing	2
4	N37811	Coupler Hub	1
5	N37813	Insert	1
6	N37816	Coupler Hub - 20mm shaft	1
7	N37820	Inlet Assembly	1
8	N37821	Inlet Screen	1
9	N37822	Drive Shaft	1
10	N37823	Bushing - Split Taper	1
11	N37905	Pipe Plug -1/8 MNPT	1
12	N37824	Key - 1/4 x 1/4 x 2 1/8 Lg	1
13	S10730	Key - 1/4 x 1/4 x 1 1/4 Lg	1
14	N37809	Fan Sensor Mount	1
15	N37825	Cover Plate	2
16	D-5279	Flange Locknut - 3/8	22
17	N37819	Rotor	1
18	S-1189	Hex Bolt - 1/2 x 1 3/4 Lg	2
19	W-1552	Hex Bolt - 1/4 x 1 Lg	2
20	W-619	Hex Bolt - 3/8 x 1 3/4 Lg	4
21	W-471	Hex Bolt - 5/16 x 1 Lg	2
22	F-1767	Hex Bolt - 5/16 x 3/4 Lg	8
23	W-516	Hex Nut - 1/2	2
24	W-513	Hex Nut - 5/16	2
25	W-525	Lockwasher - 1/2	2
26	W-522	Lockwasher - 5/16	10
27	D-5590	Seal - 1/16 x 3/4 (Bulk/Ft)	9ft
28	D-5488	Washer - 11/32 ID x 11/16 OD x 16 Ga	4

Fan
Orbit Motor

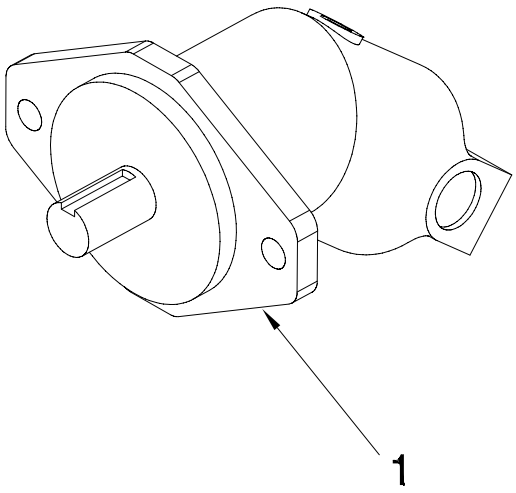

Item	Part No.	Description	Qty
1	N29372	Rexroth Orbit Motor - 12cc - 20mm shaft	1
	N37742	Rexroth Orbit Motor - 16cc - 20mm shaft	1
	N44690	Parker Orbit Motor - 12cc - 20mm shaft	1
	N25507	Shaft Seal Only for above Rexroth Motors	1
	N25508	Seal Kit for above Rexroth Motors	1
	N45040	Shaft Seal Only for above Parker Motor	1
	N45035	Seal Kit for above Parker Motor	1



Tires

Front Axle



Walking Offset Axle

- **Torque the 5/8 wheel nuts to 150 ft lbs. (203 Nm)**



Quad Steer

- **Torque the 3/4 wheel bolts to 270 ft. lbs. (366 Nm)**

Rear Axle



Single Wheel

- **Torque the 3/4 wheel bolts to 270 ft. lbs. (366 Nm)**

- Inspect tires and wheels daily for tread wear, side wall abrasions, damaged rims or missing lug bolts and nuts. Replace if necessary.
- Tighten wheel bolts - refer to Bolt Torque Chart.
- Check tire pressure daily, when tires are cold.
- Correct tire pressure is important.
- Do not inflate tire above the recommended pressure.

Important

Retorque wheel nuts after first fifteen minutes of operation and every fifteen minutes for the next 2 hours. Check periodically afterwards.

Tires - Continued

Rear Axle - Continued



Inner Wheel Assembly



Dual Wheel Assembly

- **Torque the 7/8 wheel bolts to 500 ft. lbs. (678 Nm)**

Tire Specifications

Tire	Style	Rating	Pressure			
			8240 8300 BH 8336 BH	8300 BT 8336 BT 8370 8425	BH 8435 8630 8650	BT 8435 8630 8650
21.5 x 16.1	Soft Trac	10 ply	28 psi	-	-	-
21.5 x 16.1	Lug	12 ply	24 psi	-	-	-
560/65 D24	Soft Trac	LI 140	19 psi	24 psi	-	-
500/70 R24	Lug	LI 157	20 psi	25 psi	-	-
23.1 x 26	AWT	12 ply	24 psi	-	-	-
23.1 x 26	Rice	10 ply	28 psi	-	-	-
28LR26	Lug	165 A8	-	-	18 psi	-
480/70R30 Quad Steer	Lug	LI 152	26 psi	26 psi	-	-
30.5 x 32	AWT	12 ply	20 psi	24 psi	-	-
800/65 R32	Lug	LI 172	15 psi	20 psi	-	-
800/65 R32 Dual Wheels	Lug	LI 172	-	-	-	20 psi
900/60 R32	Lug	176 A8	17 psi	17 psi	26 psi	-
520/85 R38 Dual Wheels	Lug	155 A8	-	-	20 psi	-

*BH - Tow Behind only *BT - Tow Between only

Quad Steer

- Periodically check the 1 x 3 bolts, flatwashers and locknuts attaching the axle and pivot assembly. Torque **Grade 5** bolts to 590 ft-lbs.
- Periodically check the 3/4 x 3 bolts, flatwashers and locknuts attaching the axle and pivot assembly.

  Torque the 3/4 **Grade 5** bolts to 270 ft-lbs.

  Torque the 3/4 **Grade 8** bolts to 375 ft-lbs.
- Toe-in adjustment should be 1/16” to 1/8” maximum.
- Grease all fittings every 100 hours.



Important

Retorque wheel nuts to 270 ft-lbs after first fifteen minutes of operation and every fifteen minutes for the next 2 hours. Check periodically afterwards.



Wheel Bearings

- Shut tractor off and remove key.
- Block wheel on tractor.
- Raise the air cart wheels enough to clear the surface.
- Securely block air cart frame.
- Remove wheel from hub.
- Remove the dust cap, cotter pin, and the slotted nut and washer.
- Be careful when pulling the hub off as not to drop the outer bearing.
- Clean spindle and bearing components with solvent.
- Inspect for wear on bearings, spindle and cups. Replace parts as required.
- Do not reuse old seals. Use only new seals when assembling.
- Pack inner hub with bearing grease.
- Be sure bearing and cup are dry and clean.
- Work grease into the bearing rollers, until each part of the bearing is completely full of grease.
- Install inner bearing and cup first, then press new seals in place.
- Place hub on spindle.
- Install outer bearing, washer and slotted nut.
- Tighten nut while turning the wheel until a slight drag is felt.
- Back nut off one slot and install a cotter pin. Bend cotter pin up around nut.
- Pack grease inside the dust cap and tap into position.

Important

Check wheel bearings for play every 5,000 acres (2,000 hectares) or yearly, which ever occurs first. Tighten as required.

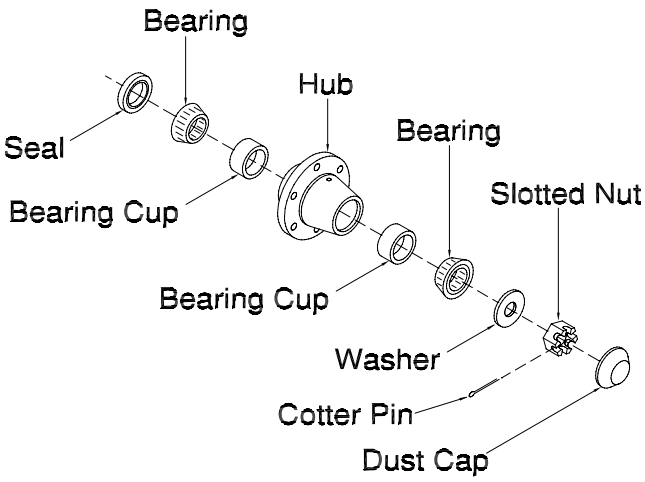

Jackshaft

- Attach main ground drive jackshaft to axle stub using 1/2” x 1 1/2” carriage bolt, lockwasher and nut.
- Loosen locking collars and bolts on the main ground drive jackshaft.
- Install the double #60 roller chain on the wheel hub sprocket.
- Ensure that the jackshaft sprocket aligns with the wheel hub sprocket and chain.
- Once sprockets are aligned, tighten bearing mount bolts then tighten locking collars on the jackshaft.

Note: Tighten locking collars in direction of shaft rotation.

- Align the inner 18 tooth sprocket with the clutch sprocket. **Tighten** the set screws on **both** sprockets.



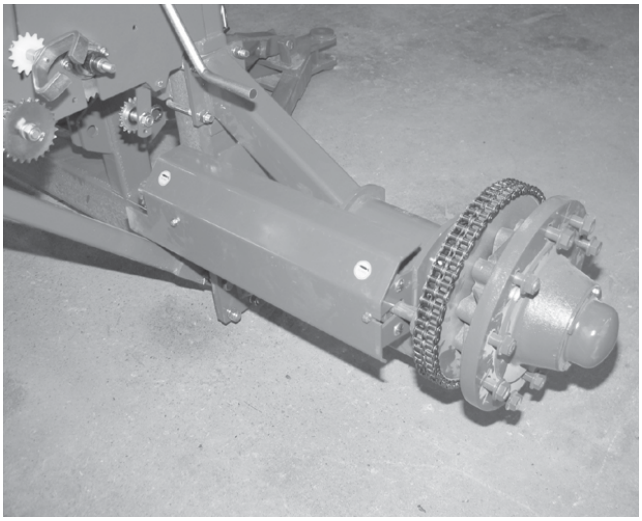

Improper sprocket alignment will result in sprocket and chain damage. This may manifest as clutch alarms or sporadic shaft RPMs.

Grease Jack Shaft bearings every 50 hours.

Jackshaft - Continued

Disconnect Main Drive Chain

When traveling any distance the drive chain should be removed to prevent premature wear on the drive.

- Remove spring from the bottom idler.
- Remove chain from the jackshaft. Units equipped with 26" diameter rims will require the jackshaft to be split at coupler in order to remove chain.
- Insert end of spring through the chain and hook other end of spring to the top idler as shown.

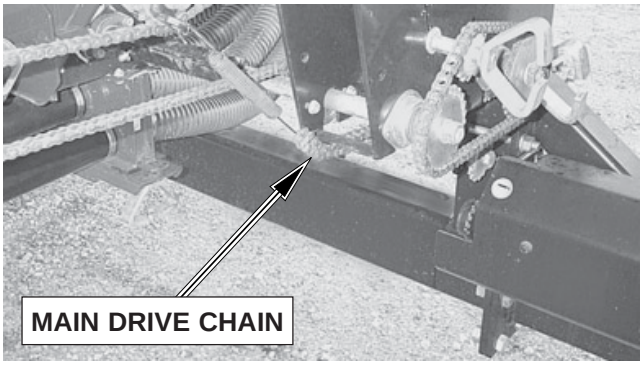

Installation of Main Drive Chain

- Unhook idler spring.
- Position chain on the jackshaft and idler sprockets as shown. Units equipped with 26" diameter rims will require the jack shaft to be split at coupler in order to install chain.
- Connect idler spring to transmission brace with idlers as shown.

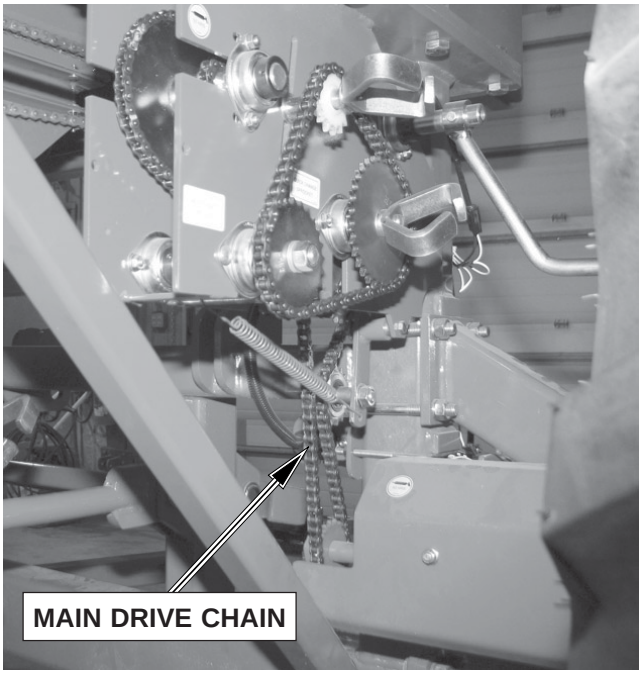

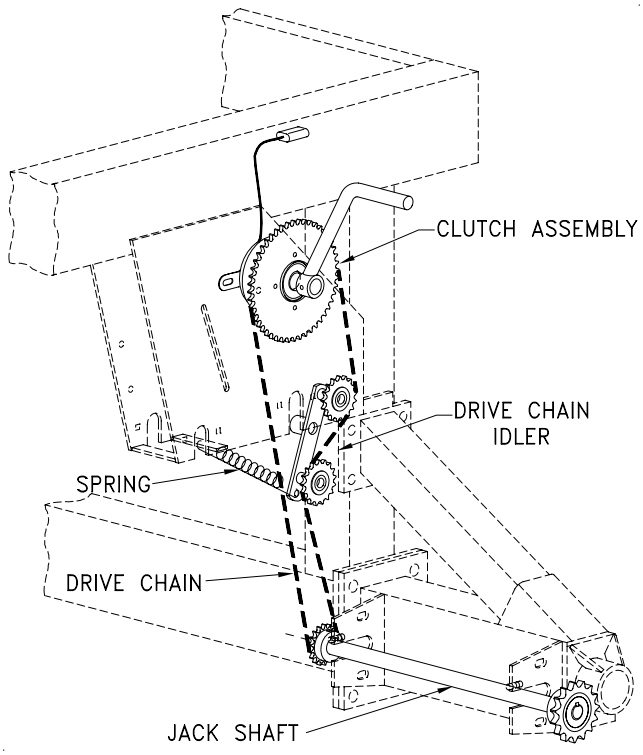

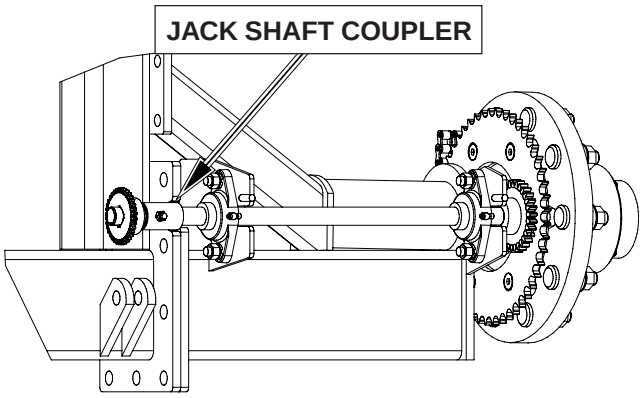

8240 and 8300
Split Jack Shaft

Metering

Spacing Sprocket

Located on the inner side of the rear transmission is a “spacing sprocket”.

The spacing sprocket must be matched to the seeding tool trip spacing.

Note: Incorrect spacing sprocket will cause inaccurate application rates.

Spacing Sprocket	
Opener Spacing	**Spacing Sprocket**
7.2" (183 mm)	12 teeth
7.5" (191 mm)	12 teeth
8" (203 mm)	13 teeth
9" (229 mm)	15 teeth
10" (254 mm)	17 teeth
12" (305 mm)	20 teeth

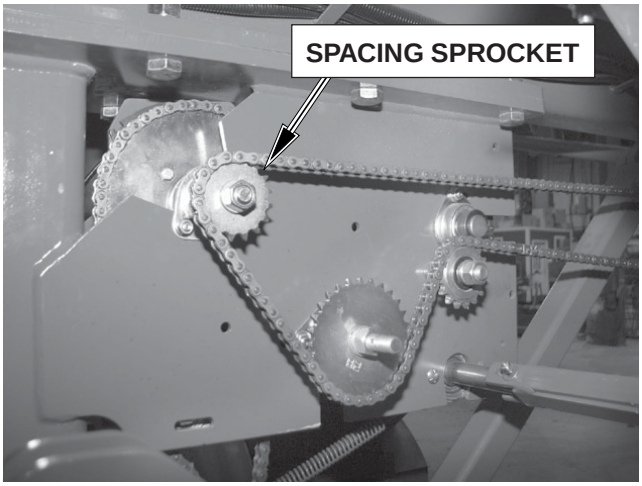

Spacing Sprocket

Tire Size Sprocket

In conjunction with the spacing sprocket is the tire size sprocket as illustrated in the previous diagram.

These sprockets are located on the inner side of **each transmission** input shaft and are driven by the spacing sprocket.

The tire sprocket must be matched to the tire size of the air cart.

Important

Ensure correct Tire Size Sprockets are used. Incorrect tire size sprocket will cause inaccurate application rates.

Tire Sprocket			
Tire Size (Goodyear)	**Tire Style**	**Rating**	**Tire Sprocket**
30.5 x 32	AWT (Implement)	12 ply	28 teeth
30.5 x 32	Lug (Dyna Torque II)	14 ply	28 teeth
800/65 R32	Radial (Dyna Torque)	L1 172	28 teeth
800/65 R32 Dual Wheels	Radial (Dyna Torque)	L1 172	28 teeth
900/60 R32	Radial (Dyna Torque)	176 A8	26 teeth
520/85 R38 Dual Wheels	Radial (Ultra Torque)	155 A8	28 teeth

Metering - Continued

8300XL with optional Third Tank

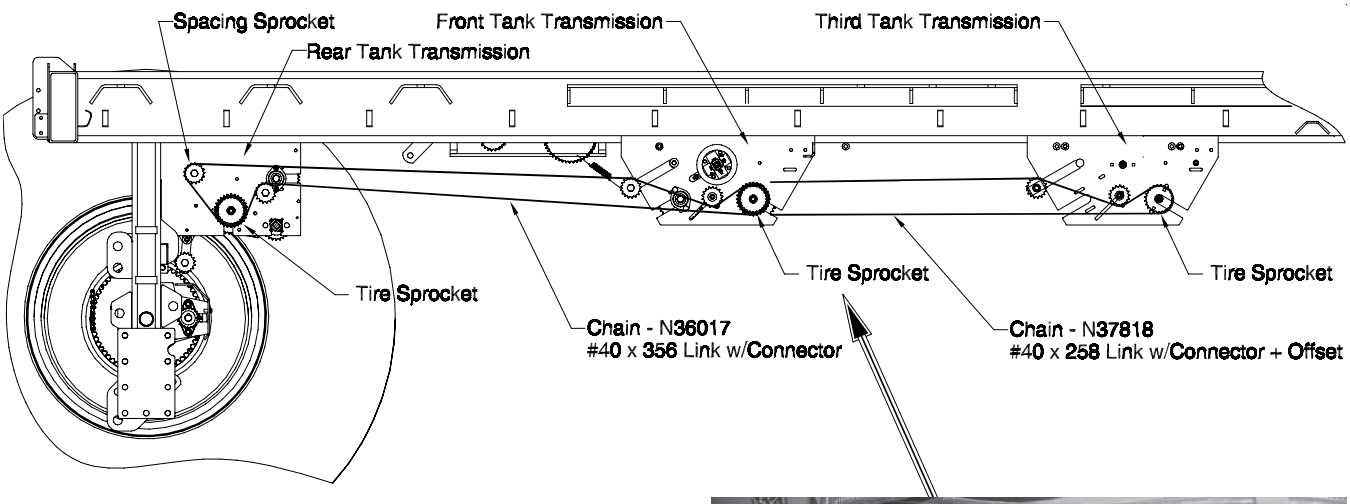

Third Tank

- Remove nut and washer.
- Place 21/32 ID x 7/8 OD x 7/8 Lg bushing onto shaft followed by the correct tire sprocket.
- Secure in place with the washer and nut.

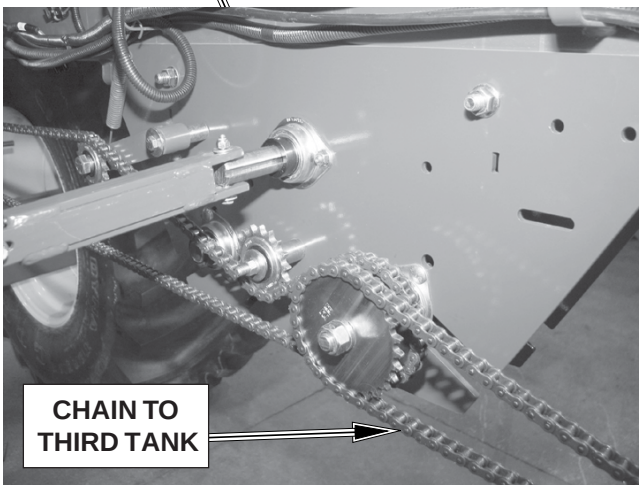

Metering - Continued

8370XL with optional Third Tank

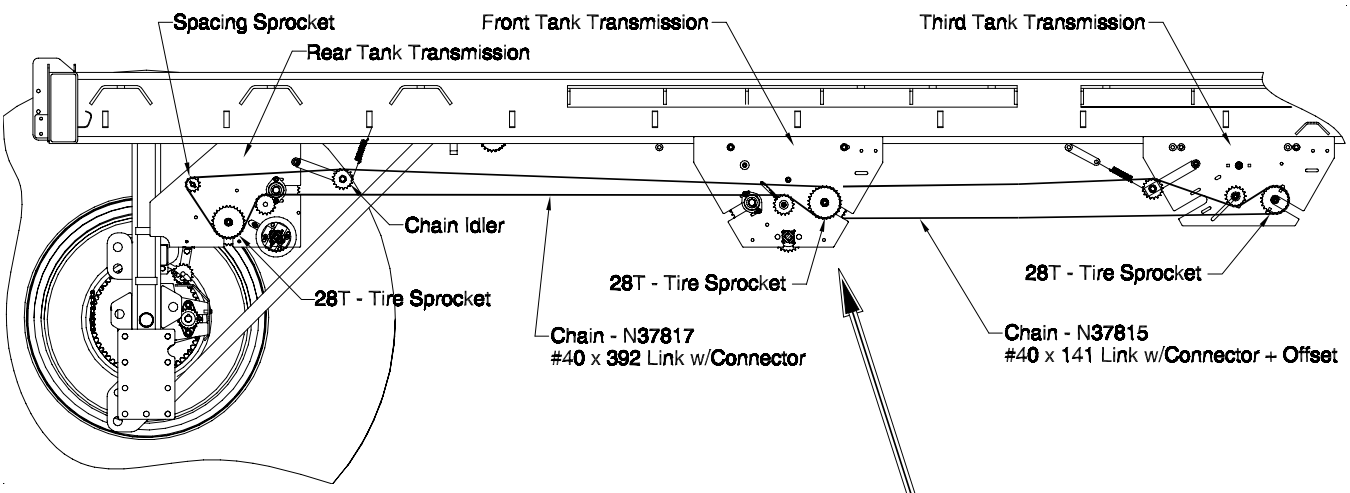

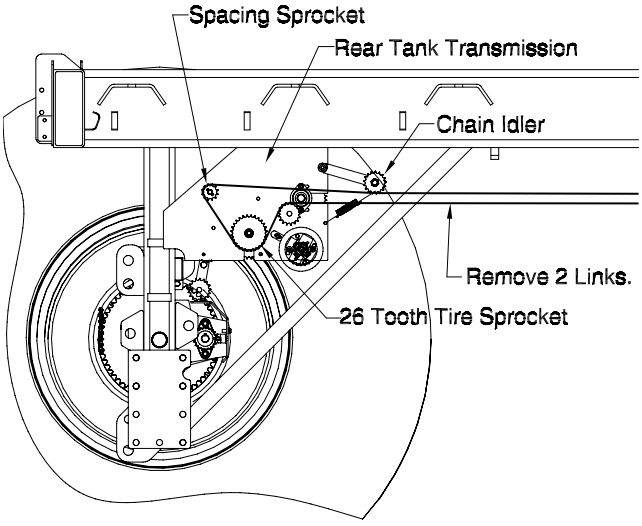

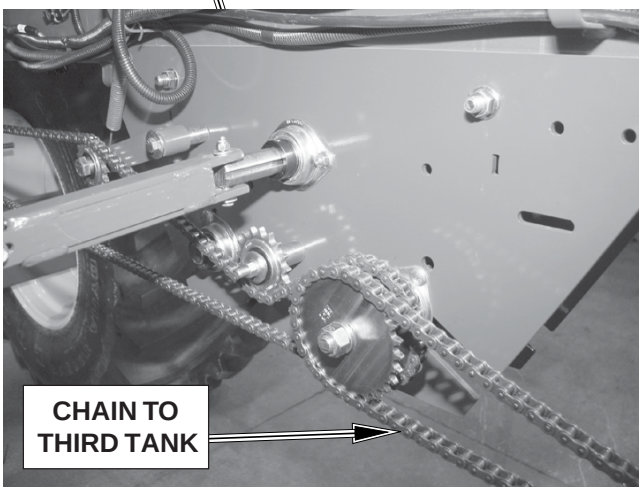

8370 Third Tank Drive Chain

- Remove nut and washer on front transmission tire sprocket.
- Place 21/32 ID x 7/8 OD x 7/8 Lg bushing onto shaft followed by the correct tire sprocket.
- Secure in place with the washer and nut.
- Attach strap to frame as shown with a 1/2" x 5 1/2" bolt and 1/2" Locknut.
- Connect spring to strap and idler arm.
- Adjust idler in slot to provide tension on spring idler.

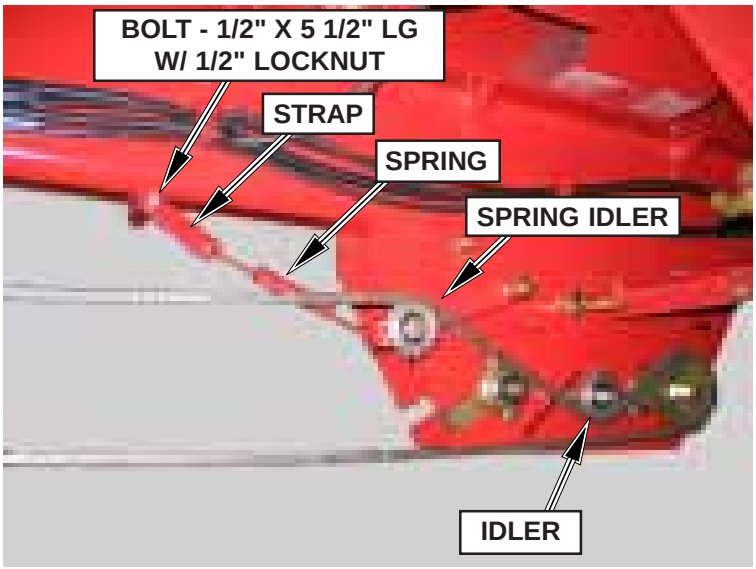

Metering - Continued

8435XL and 8630XL Tow Behind - 2 & 3 TANK

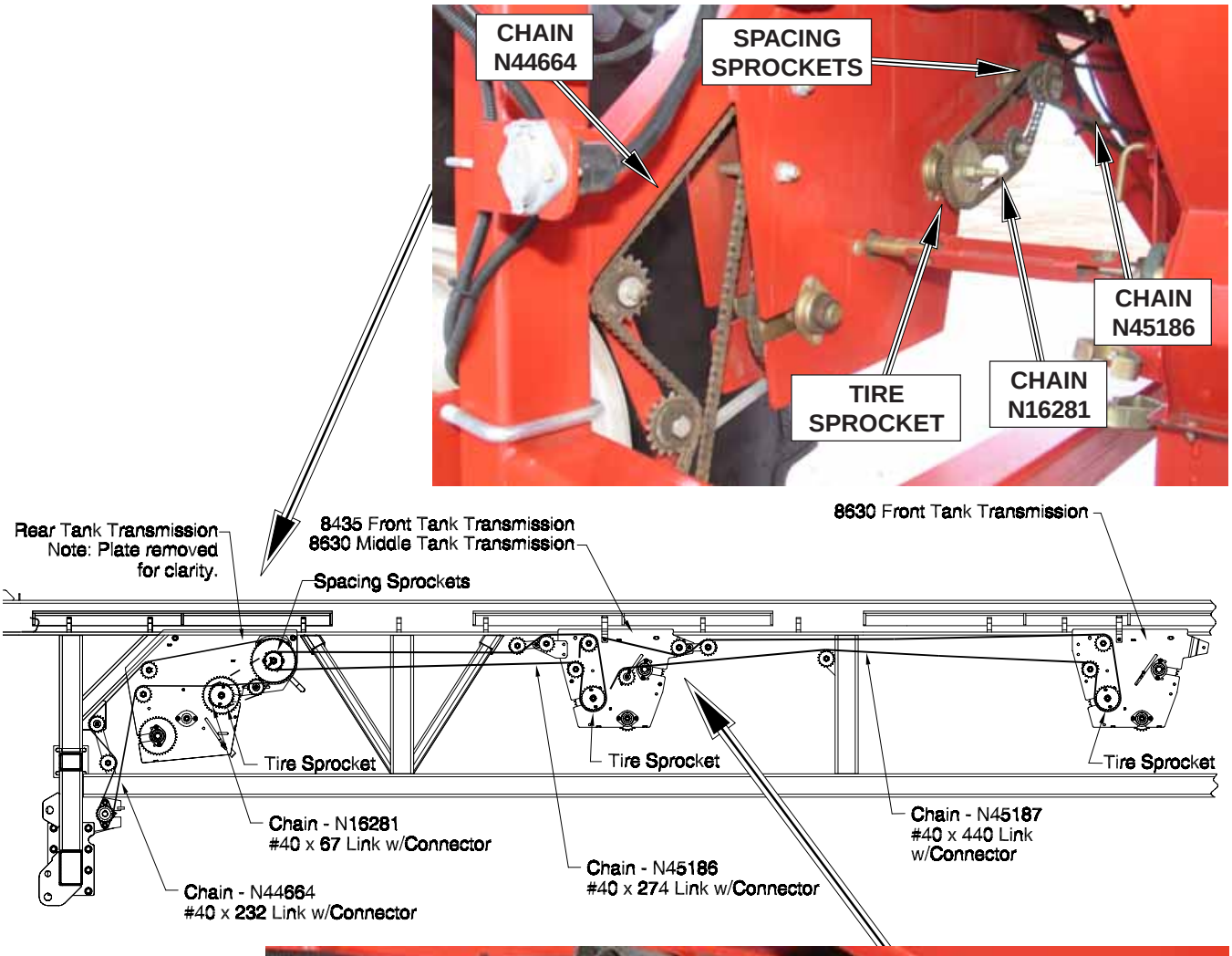

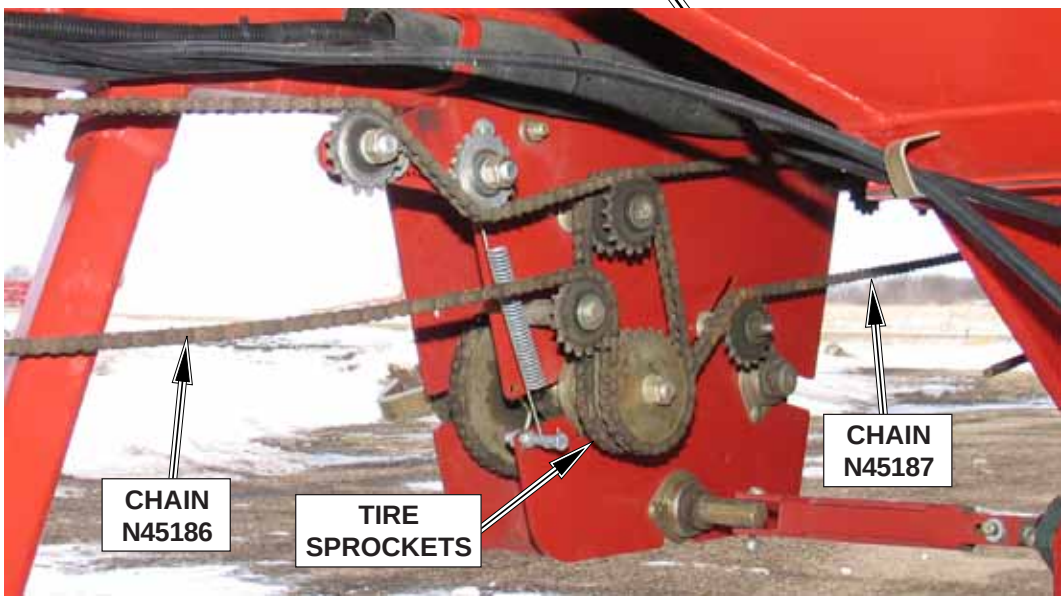

Metering - Continued

8650XL Tow Behind - 4 TANK

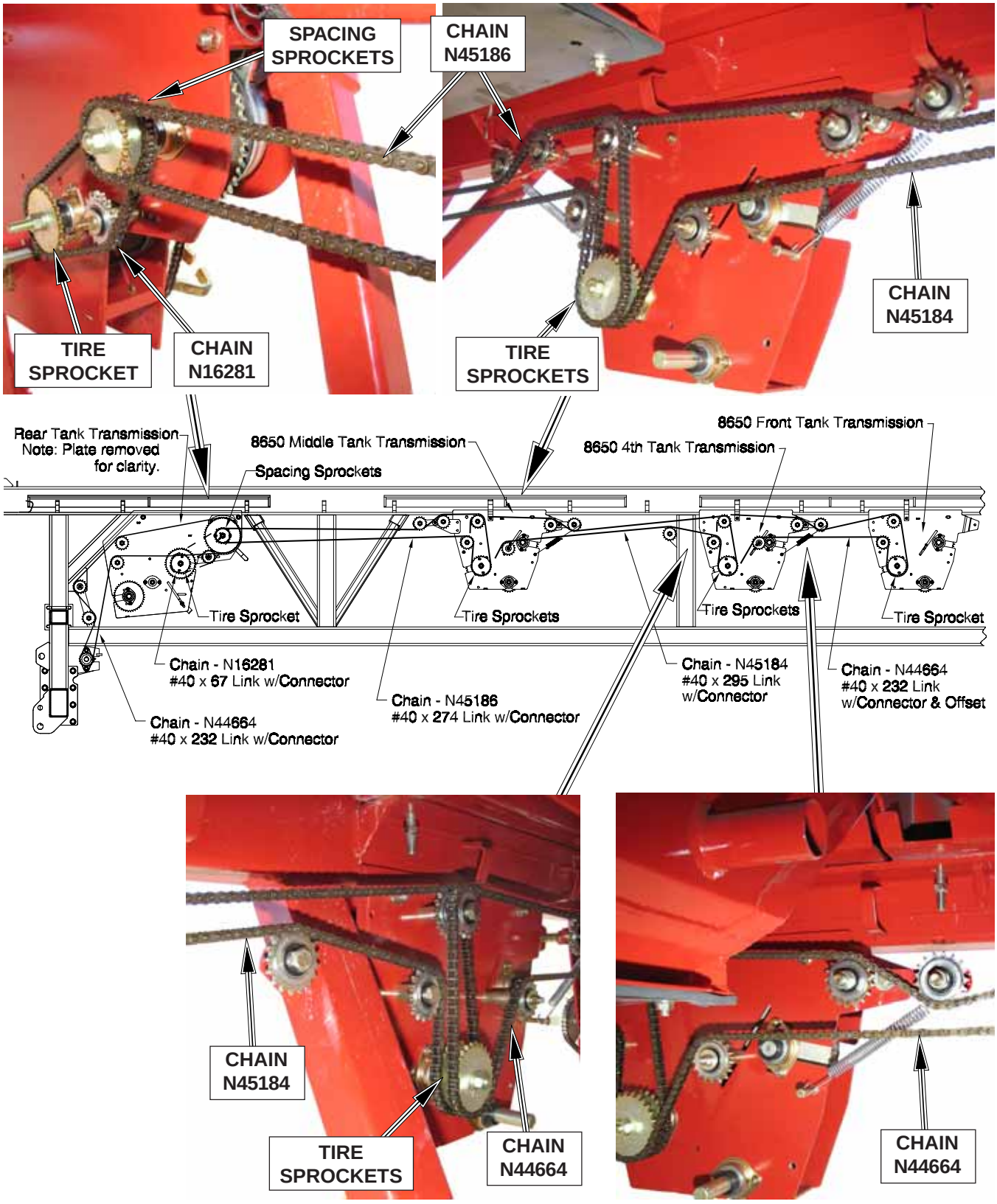

Metering - Continued

8435XL, 8630XL and 8650XL Tow Between - Clutch Drive

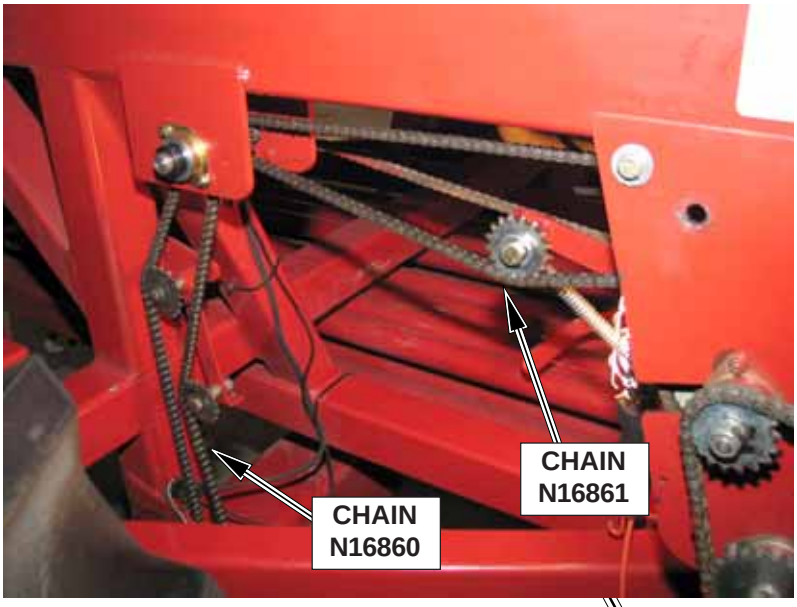

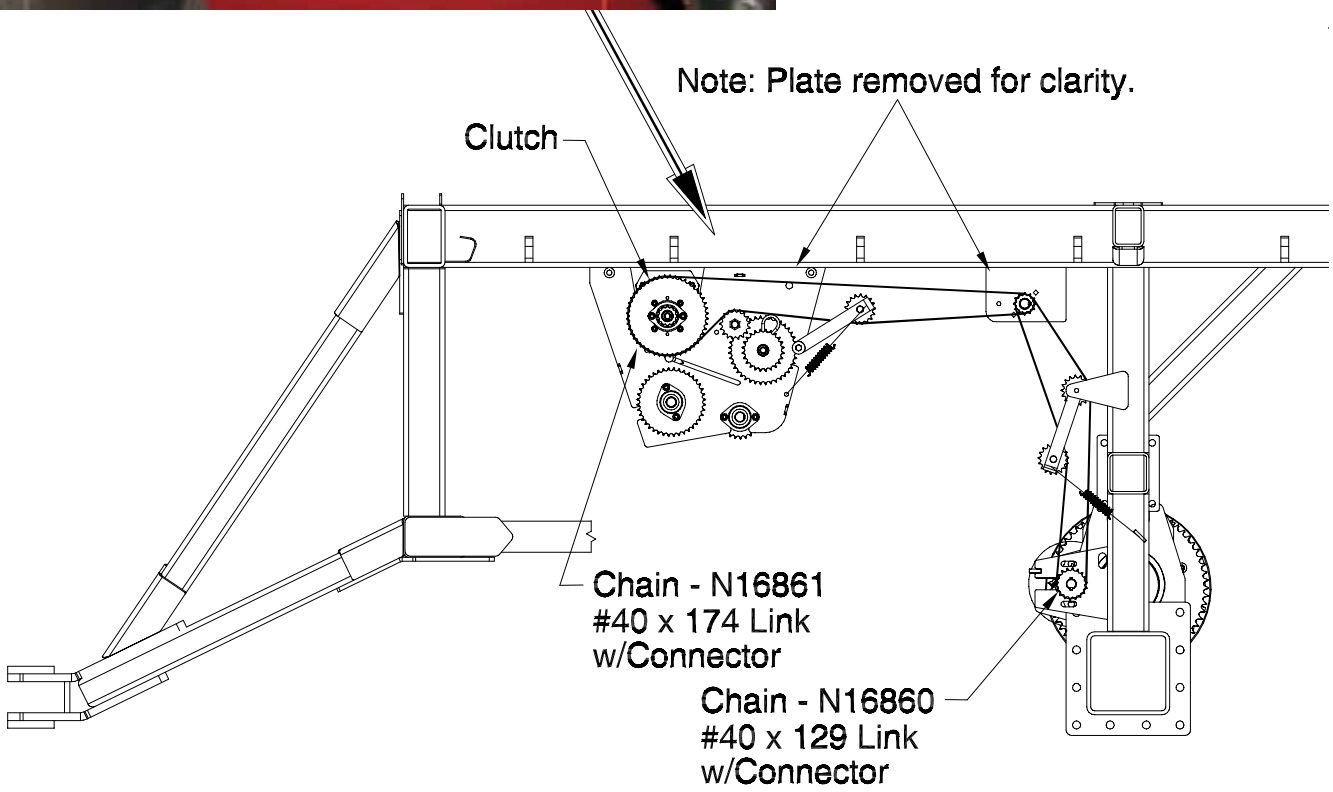

Metering - Continued

8435XL and 8630XL Tow Between - 2 & 3 TANK

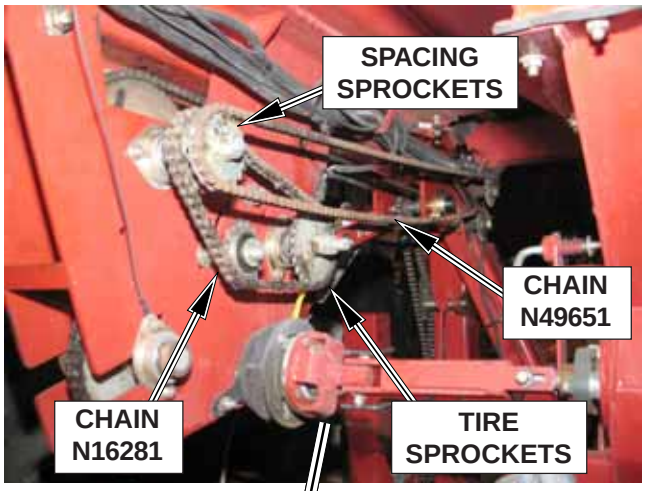

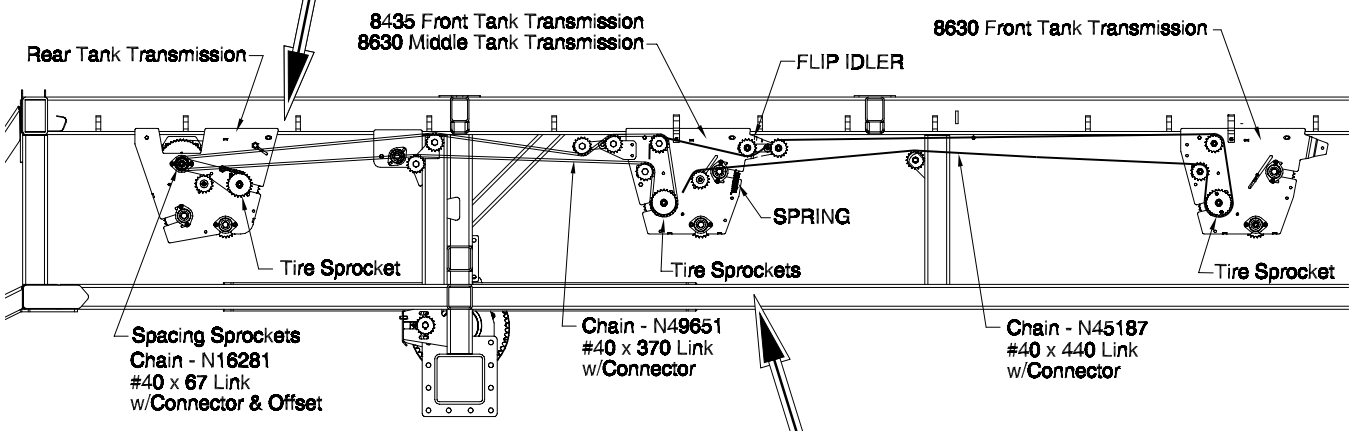

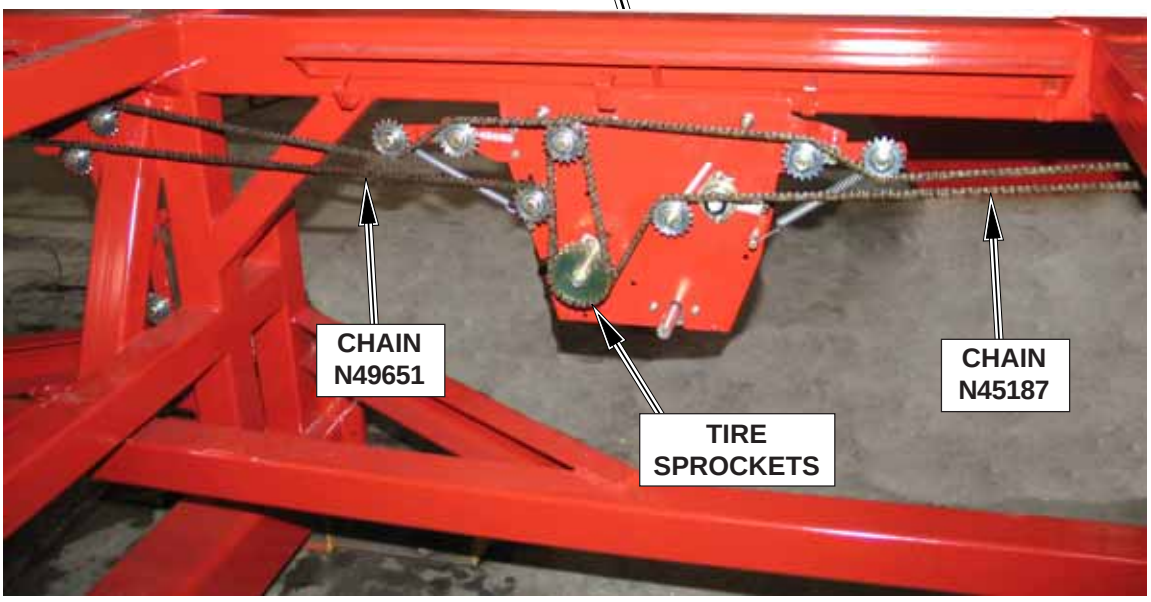

Metering - Continued

8650XL Tow Between - 4 TANK

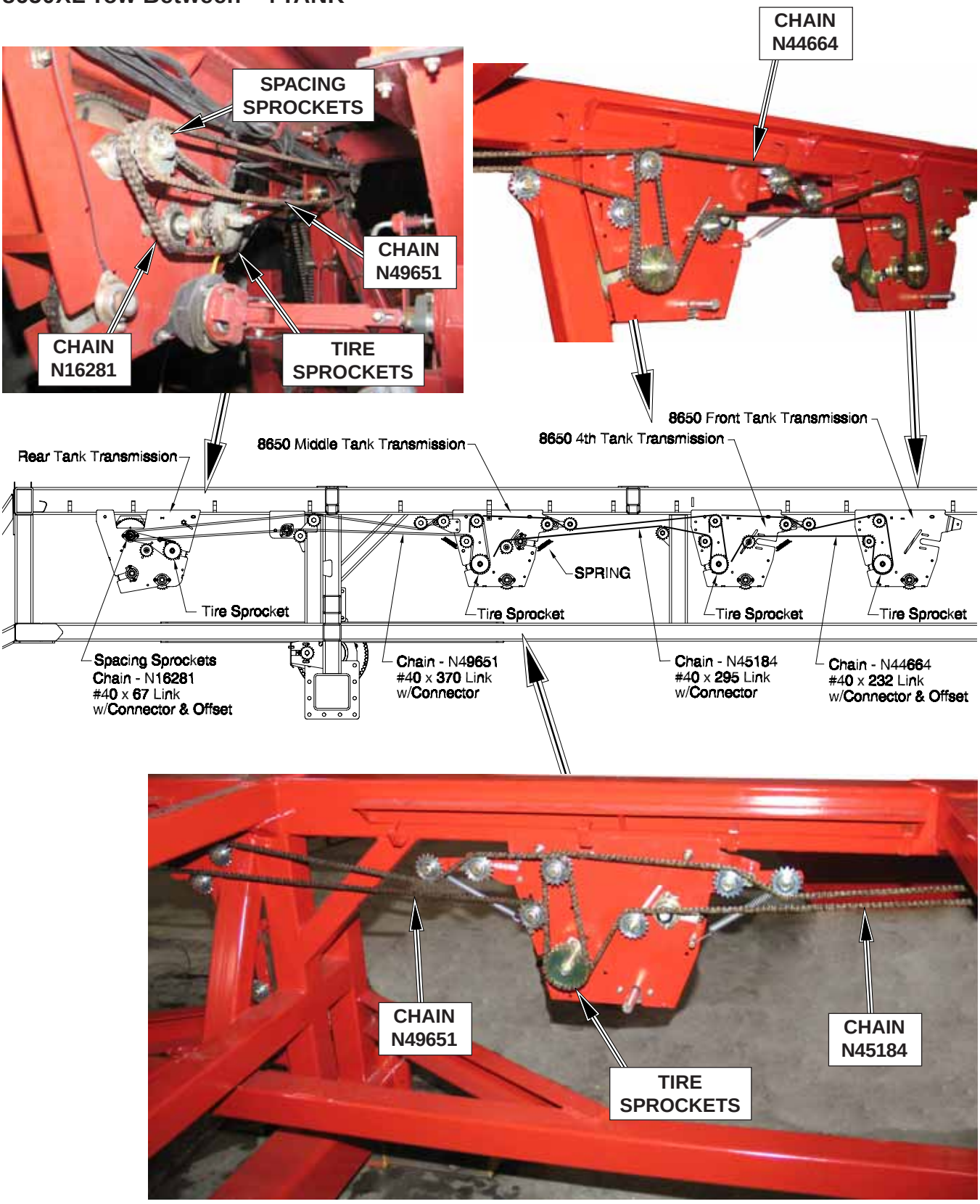

Metering - Continued

8650XL Tow Between - 4 TANK - Continued

Front Tank Transmission

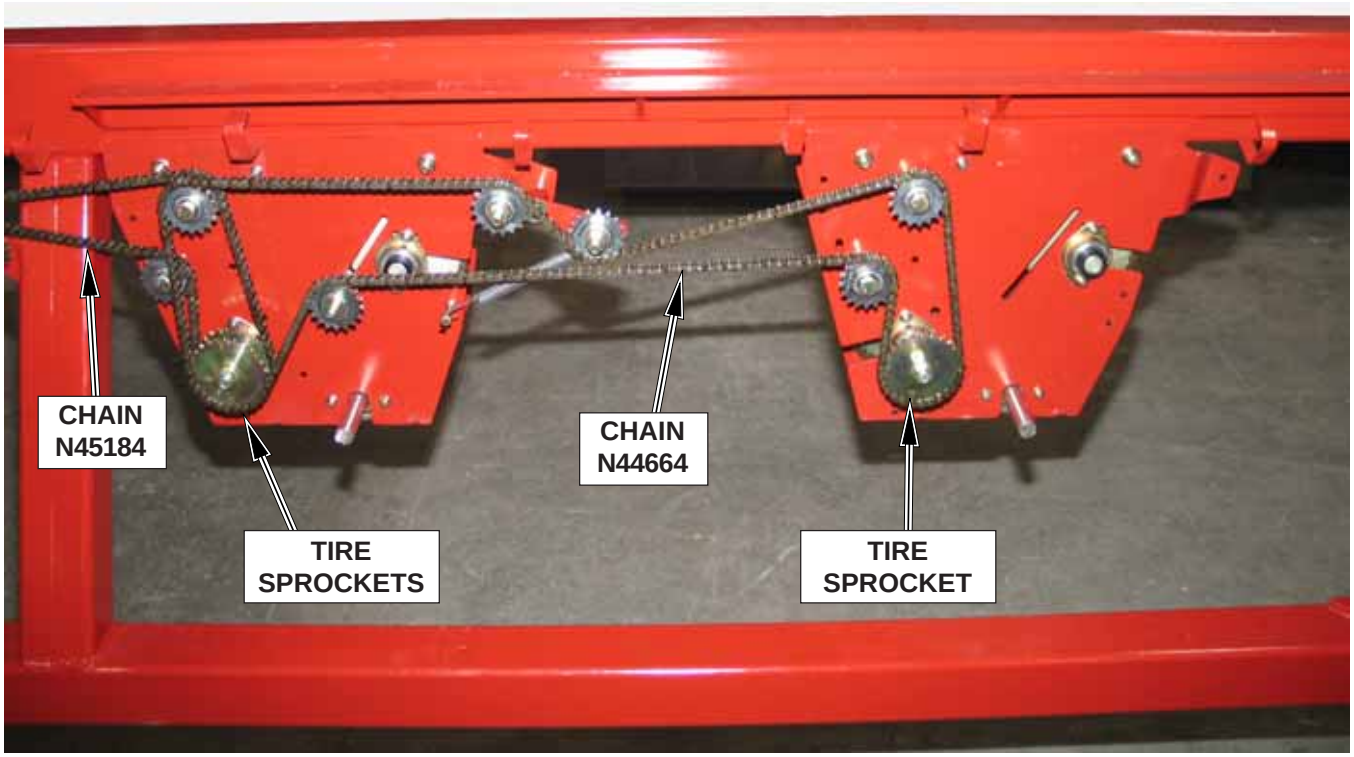

Metering Wheels - Continued

Metering Shaft Assembly

- Remove Inspection door.
- Remove 3/8” bolts holding the shipping plates covering the metershaft openings in the meterbody.
- Install snap ring and 1” ID stainless steel flatwasher onto the end of the shaft.
- Install (1) 1/4” spacer onto the shaft and slide against the flat washer and snap ring.
- Assemble meterwheels and spacers to shaft. Ensure correct spacers and wheels are located and assembled in the correct order. See Table 1 for meterwheel configurations. **Note:** After each meterwheel configuration, including any “Blank Offs”, add one 5/16” spacer. The correct distance between the 5/16” spacers is 3” when assembled.
- Once all meterwheels and spacers are assembled add 1/4” spacer, 7/8” ID stainless steel flat washer and nut.
- Tighten nut on metering shaft until it bottoms out, ensure end spacers are on square of shaft.
- Check if spacers and wheels are tight. If the wheels and spacers are loose. Measure shim thickness required. If 1/16” shim required remove nut on metershaft and install shim between the 1/4” end spacer and the spacer used for the run.
- If a 1/8 shim is required then remove nut and install 1/16” shim between 1/4” end spacer and the spacer used for the run. Remove the snap ring at the other end of the shaft and install the other 1/16” spacer before the 1/4” end spacer. If more shims are required install 1/8 shims same as above.
- Reinstall snap ring and 1” ID stainless steel flat washer.

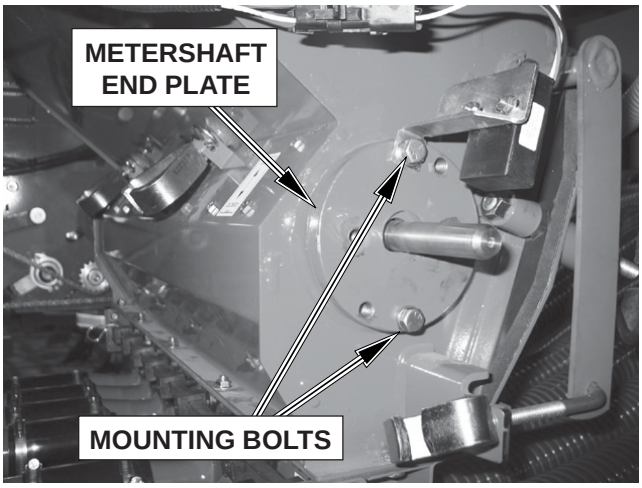

Assembly Hint: Arrange wheel assemblies in the coarse seed plate. This will ensure correct wheel and spacer arrangements prior to placing on meter shaft.

Note: Each meter wheel assembly is 3” wide.

Note: If too many shims are used on the shaft ends the wheels could be compressed (ballooned) causing shaft assembly to be tight in metering body requiring excessive torque to turn.

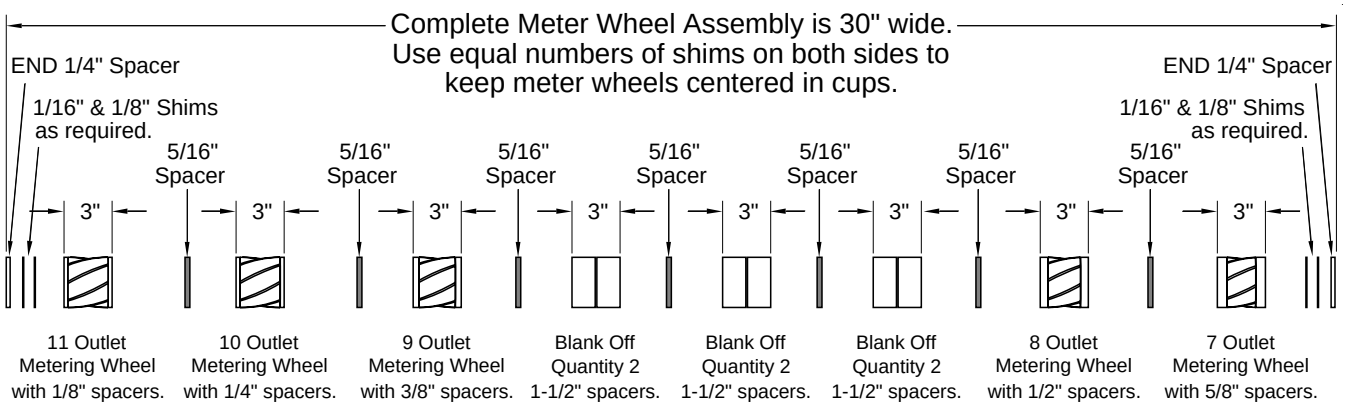

Note: This is an illustration to show each wheel combination and overall spacer arrangement.

Metering Wheels - Continued

- Reassemble shaft and tighten nut. Check to see that spacers and meter wheels are tight.
- Ensure that metering wheels and spacers are not over tightened. If this is done, the metering wheels will swell and cause the metering shaft to turn stiffly inside the metering body.
- **Do Not** install meter shaft into the meter body at this point.
- Install the seed plate and adjust the seed plate locks so that the bottom of the seed plate comes against the bottom of the rear back plate. Tighten nuts, so the flat washers are against the bracket
- Remove the seed plate and set aside.

Assembly Hint: Mark metering wheel size on the metering body. This will help in connecting the main distribution hose and secondary divider heads

- Install meter shaft assembly, snap ring end first into meter body.
- Install 'O' Ring onto meter shaft end plate.

Note: Apply thin layer of lubricate on 'O' Ring.

- Insert Meter shaft end plate into the right hand side meter body opening. The end plate can only be installed one way. The end plate is stamped with a "T" to mark top hole. The mounting holes are slightly offset ensuring that it is mounted correctly.
- Install Meter shaft end plate and monitor sensor bracket using (2) 3/8" x 1" lg. The Meter shaft end plate should bottom out against the side of the meter body.
- Install meter shaft bearings and spacers using 3/8" x 1 1/2" bolts.
- Check meter shaft for ease of rotation. The wheels should turn easily when rotated by hand. **Maximum torque on assembled meter shaft is 50 inch pounds (4 ft. lbs.)(5.6 Nm).** If too tight then back off bolts (2) 3/8" x 1" lg on the Meter shaft end plate and install N37210 shims as required. Retighten bolts and check ease of rotation.

  If they are difficult to turn after shims have been added, alignment of the backing plates is required. With meter wheels assembled in the body, loosen the 1/4" x 1/2" Lg hex bolts securing the backing plates to the meter body. Rotate meter wheels in direction of rotation (3 to 4 turns) until backing plates align with the wheels. Secure 1/4" x 1/2" Lg bolts starting from right, and alternate from bottom to top bolt.

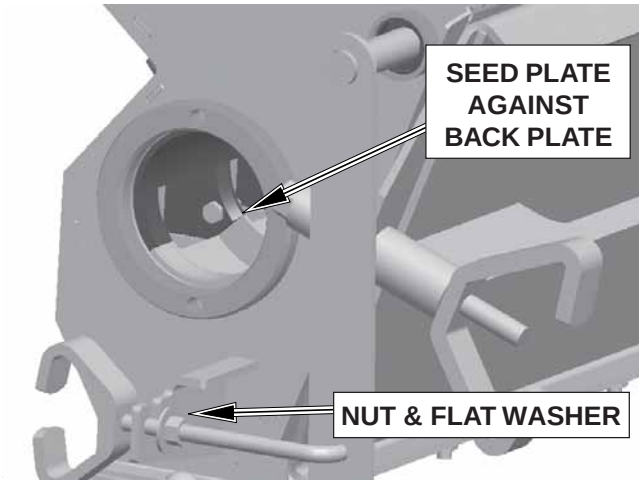

Seed Plate Adjustment

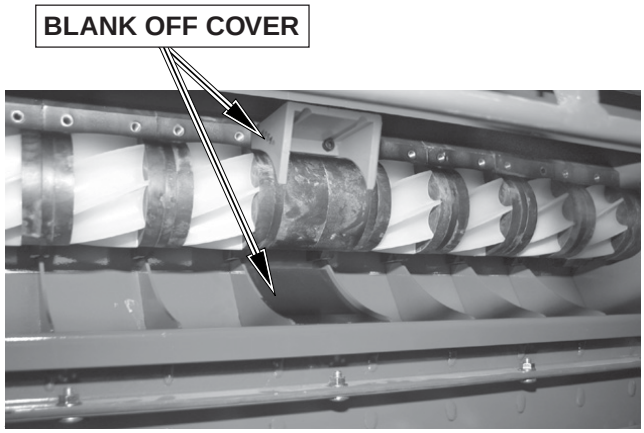

Blank Off

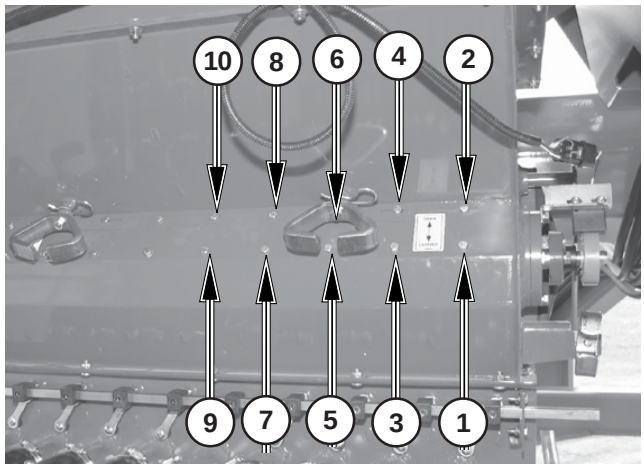

Alignment of the Backing Plates

Note: Bolt Torque is 60 inch pounds (5 ft. lbs.) (6.7 Nm).

Metering Wheels - Continued

- Tighten locking collars by turning the collars in the direction of the shaft rotation. Lock the collar by tapping the collar with a punch in the direction of rotation of the shaft.
- Install monitor donut on shaft. Ensure donut is centred to the pick-up. Set the gap between the pick-up and the donut at 0.030".
- Install the **Correct** seed plate for product being metered.
- Attach meter shaft coupler over the meter shaft and transmission drive shaft.
- Install the 1/4" x 2 1/4" special bolt with two flatwashers and locknut. **Tighten locknuts to bottom of threads.**
- Repeat the above procedure for each tank.



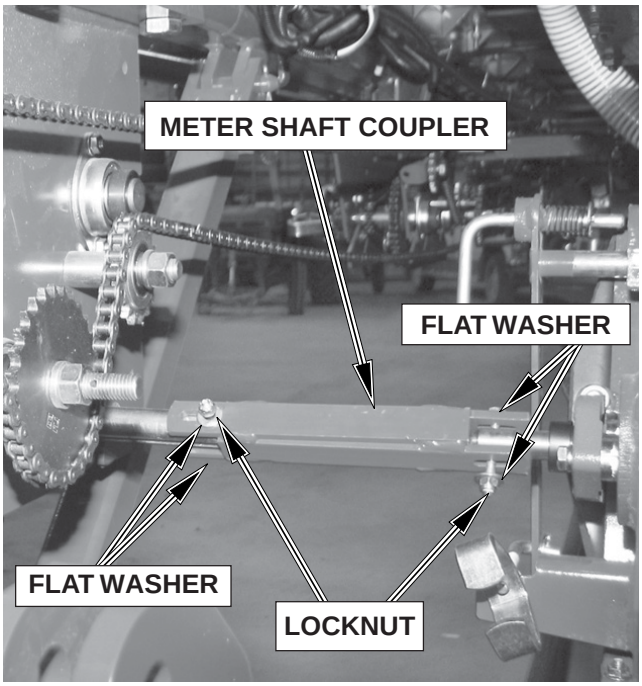

Metering Shaft Removal

- Remove meter shaft coupler.
- Remove locking collar. It may be necessary to file down burrs caused by the special ¼"X 2 ¼" bolt that connects the coupler to the stainless steel shaft.
- Remove the two 3/8" bolts fastening the hub to the metering body on the shaft sensor side. Insert them into the threaded holes on the hub and tighten till the hub seal comes free of the metering body.
- Pull freed metering shaft out of the metering body.

Metering Wheels - Continued

Blank Off Installation

Proper fit between the Blank Off and the spacer on the meter roller is important.

To ensure correct installation of the Blank Off follow the procedures listed below:

- Loosely install the Blank Off covers using (2) 1/4" Hex Socket bolts over the top of **all** the Blanked Off runs. Ensure seal strip **item # 26** is installed on the front of the Blank Off.
- Hold in place on top/back side of the Blank-Off to align the radius with meter roller while tightening capscrews.
- Tighten capscrews starting with the left screw when facing body.

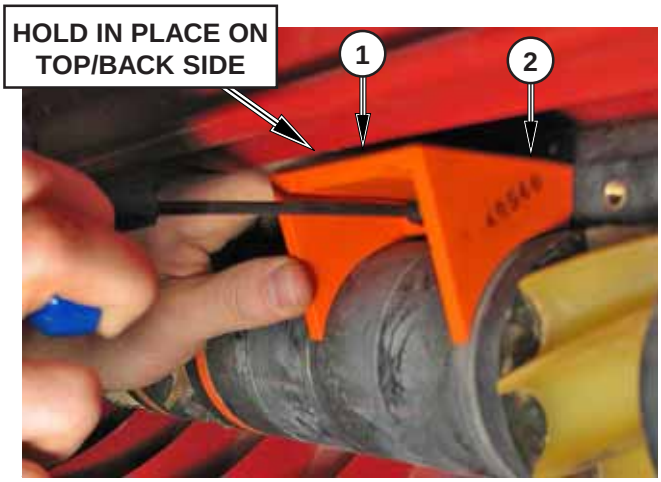

Blank Off Installation Procedure



Correctly Installed Blank Off

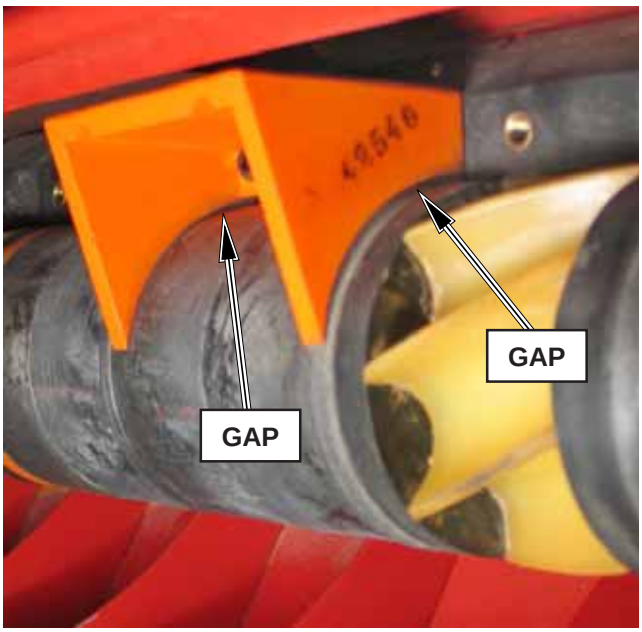

Incorrectly Installed Blank Off

Metering
8435XL, 8630XL & 8650XL Secondary Clutch & Frame Idler

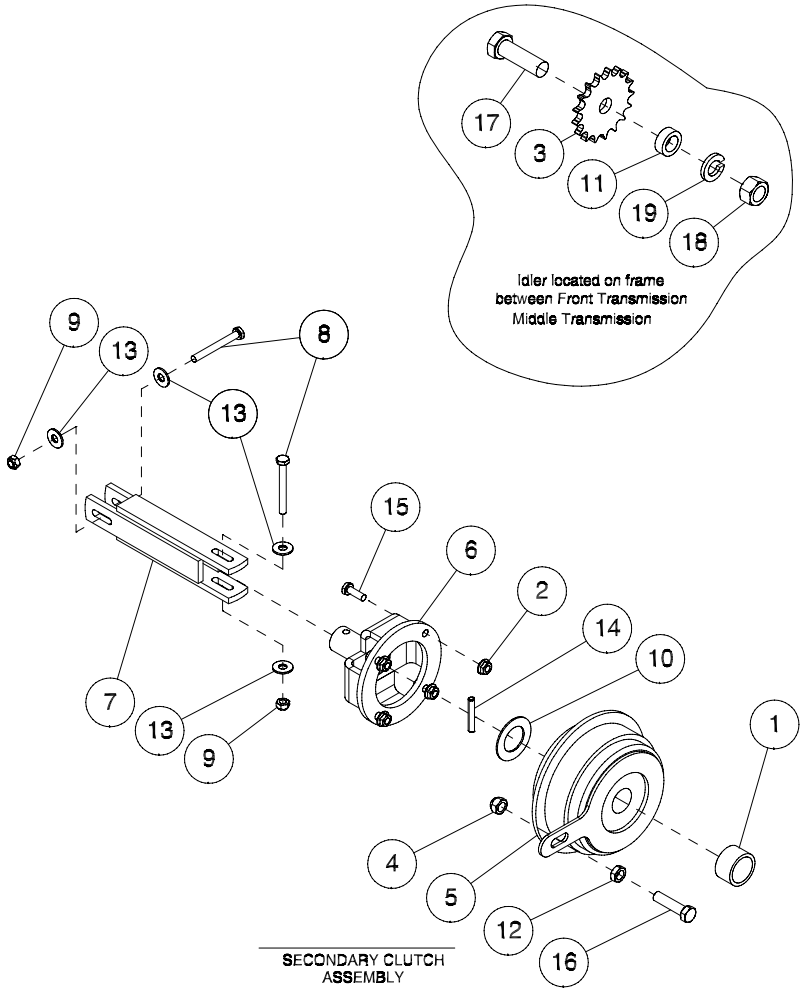

Item	Part No.	Description	Qty
1	C21667	Spacer	1
2	D-5277	Flange Lock Nut - 1/4 Serrated	4
3	D17808	Sprocket IDler- 40A17	1
4	M-3388	Locknut - 3/8 Unitorque	1
5	N16862	Electric Clutch	1
6	N19470	Clucth Coupler	1
7	N21287	Coupler	1
8	N22777	Bolt 1/4 x 2 1/4 W/ 3/8 Thread	2
9	N22778	Locknut - 1/4 Nylon Insert	2
10	N31040	Washer - 1-1/32 ID x 1-3/4 OD x 16 Ga	1
11	N44676	Bushing - 1 OD x .640 ID x 3/8 Lg	1
12	S-748	Hex Jam Nut - 3/8	1
13	S-1198	Washer - 5/16 ID x 3/4 OD x .065	4
14	S-4781	Spring Pin - 1/4 x 1 1/2	1
15	W-469	Hex Head - 1/4 x 3/4 Lg	4
16	W-477	Hex Bolt - 3/8 x 1 1/2 Lg	1
17	W-499	Hex Bolt - 5/8 x 2 Lg	1
18	W-517	Hex Nut - 5/8	1
19	W-526	Lockwasher - 5/8	1

Calibration - Ground Drive

Rate Chart Use

The rate chart applies to all spacings listed below.

The spacing sprocket must be matched to the seeding tool trip spacing see *"Spacing Sprocket"*.

The charts should only be used as a guide. Specific rates can be achieved by using the rate check method as outlined under *"Rate Calibration"*.

To determine a seed/fertilizer rate from the chart:

- Go to the desired rate along the line marked "Standard" of a specific graph. (i.e. 95 lbs/acre of wheat)
- Go straight up from that point to where that line is intersected by the graph. This will give the sprocket size required to give the particular rate chosen.
- At this intersection go straight across to the vertical line of the graph. This will give the sprocket size required to give the particular rate chosen. (i.e. 95 lbs/acre of wheat requires a 29 tooth sprocket)
- Change the Quick Change Sprocket see *"Metering Rate Adjustment"*.
- Perform a rate check to confirm the seed rate see *"Rate Calibration"*.
- Repeat the above procedure for the other tank.
- For very low or very high rates, see next page *"Extra Low Rates"* and *"Extra High Rates"*.

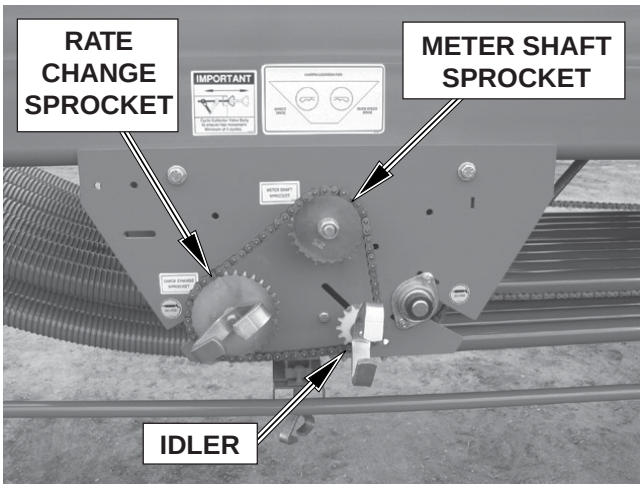

Note: The rate charts should only be used as a guide. Variation in seed size, density, shape, tire pressure and wheel sinkage are all factors that can influence the seed rate.

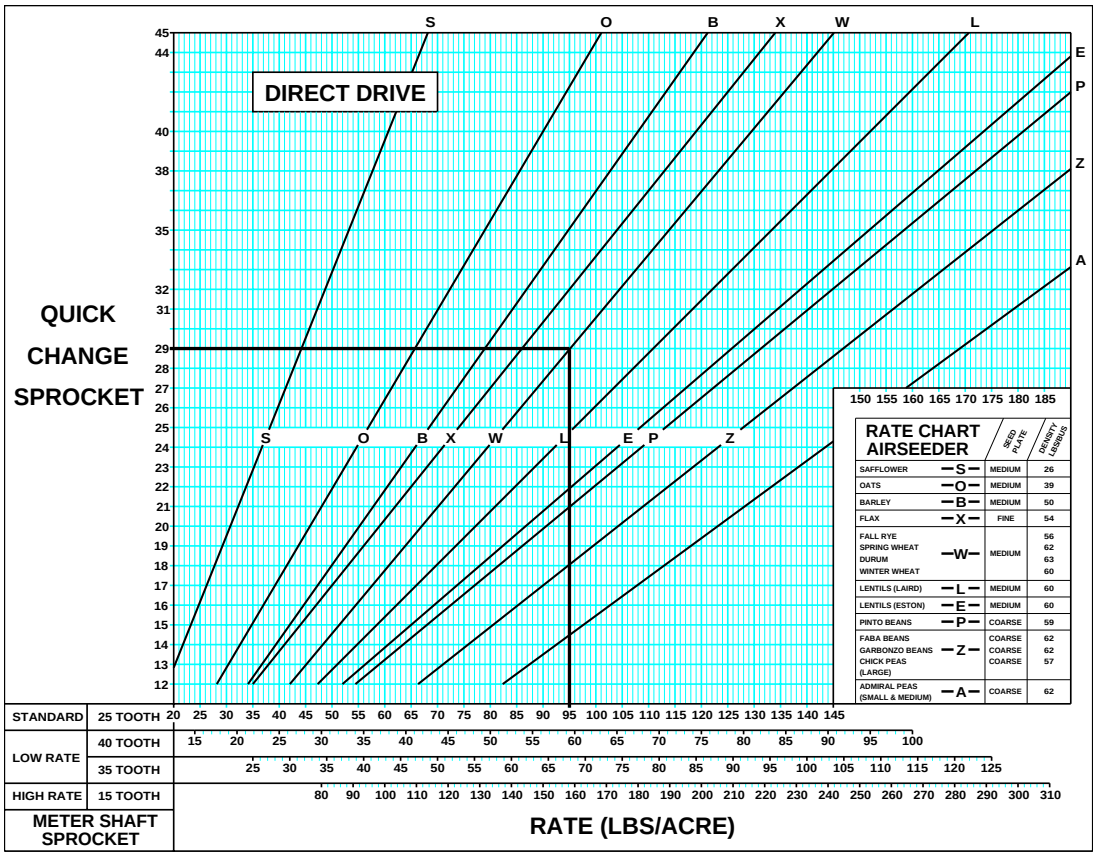

Calibration - Continued

Metering Rate Adjustment

The metering rate adjustment for all tanks is done in the same manner. The rate varies with the speed of the metering wheels. A new rate is achieved by changing a sprocket on the Posi-Drive Transmission.

Refer to the rate charts for desired application rate and sprocket selection.

- Loosen metering chain on posi-drive transmission, by loosening the idler.
- Spin off wing nut and remove rate change sprocket.
- Install desired rate change sprocket and tighten wing nut.
- Tighten chain by adjusting idler.

Note: Do not over tighten chain, just take slack out of chain.

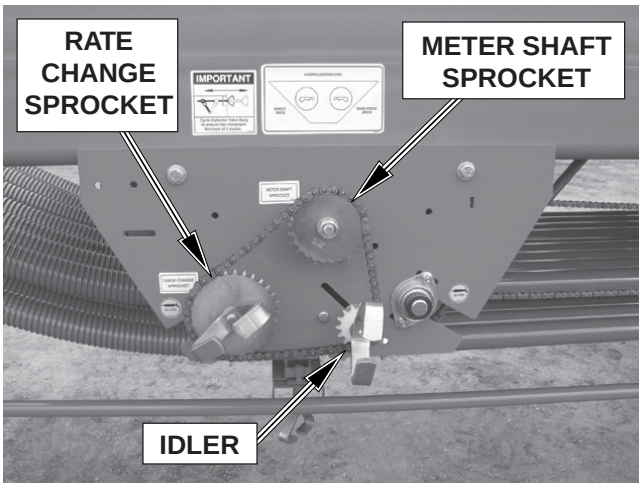

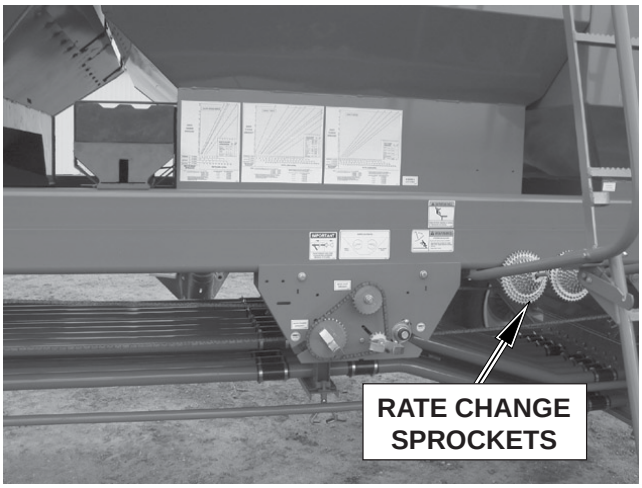

Acre Tally

To convert the acre tally reading (T) into the actual acres seeded turn to the Crank Calibration Table page to get the acre tally factor (F) for the air cart/seeding tool width being used. Take the acre tally reading (T) and multiply it by the acre tally factor (F) to get the actual acres seeded.

T x F = Actual Acres Seeded

Example: A 8425 with AWT Tire with a 41 foot seeding tool has an acre tally reading (T) of 100. The acre tally factor (F) is 5.91 from Calibration Chart.

T x F = Actual Acres Seeded

100 x 5.91 = 591 Acres

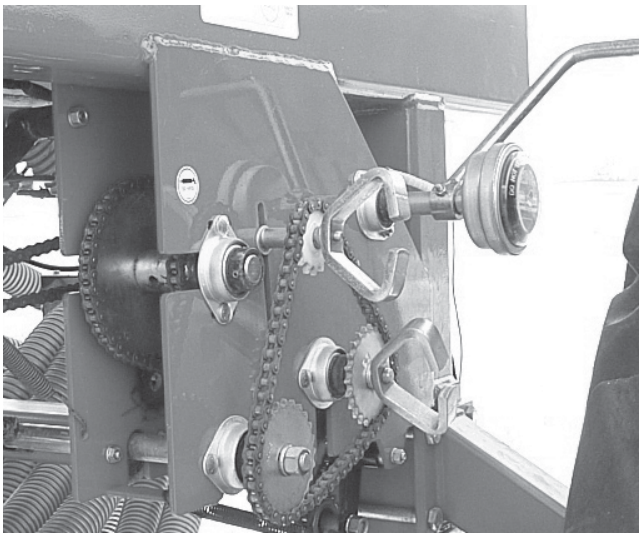

Calibration - Continued

Rate Calibration

- Ensure tires are at correct pressure.
- Determine Tire Circumference (Tc) as follows:
  - Check under normal field conditions with tanks half full.
  - Mark tire and starting point.
  - Drive air cart 10 revolutions of tire in a straight line.
  - Mark ending point.
  - Measure distance from starting point to ending point and divide by 10 to get the rolling circumference of the tire (Tc).

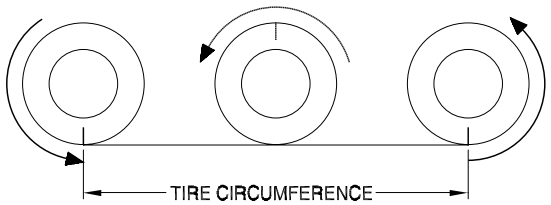

- Calculate the number of rotations (R) of the calibration crank for 1/10 Acre. Record value below for future reference.

  Note: For reference nominal (R) values are listed in Section 12 of the manual.

- Calculate required tire sprocket size (Ts) and to ensure correct sprockets are installed on the Air Cart. Record value below for future reference.

Note: Due to ratios the value may not be a whole number and should be rounded to nearest value.

- Calculate the monitor PP400 setting. Record value below for future reference. Change monitor to new PP400 value as outlined under *"Changing Monitor Settings"* under Monitor Section.

Example:

For a 8370 with 800/65 R32 Tires and a 51ft wide seeding tool (W) with:

The measured Tire Circumference (Tc) was 211.6 inches.

For 32" Rim

Crank Rotations (R) = (82328.4/W)/Tc
= (82328.4/51)/211.6
= 7.63

Monitor PP400 = 80640/Tc
= 80640/211.6
= 381

Tire Specifications

Tire	Style	Rating	Pressure			
			8240 8300 BH 8336 BH	8300 BT 8336 BT 8370 8425	BH 8435 8630 8650	BT 8435 8630 8650
21.5 x 16.1	Soft Trac	10 ply	28 psi	-	-	-
21.5 x 16.1	Lug	12 ply	24 psi	-	-	-
560/65 D24	Soft Trac	LI 140	19 psi	24 psi	-	-
500/70 R24	Lug	LI 157	20 psi	25 psi	-	-
23.1 x 26	AWT	12 ply	24 psi	-	-	-
23.1 x 26	Rice	10 ply	28 psi	-	-	-
28LR26	Lug	165 A8	-	-	18 psi	-
480/70R30 Quad Steer	Lug	LI 152	26 psi	26 psi	-	-
30.5 x 32	AWT	12 ply	20 psi	24 psi	-	-
800/65 R32	Lug	LI 172	15 psi	20 psi	-	-
800/65 R32 Dual Wheels	Lug	LI 172	-	-	-	20 psi
900/60 R32	Lug	176 A8	17 psi	17 psi	26 psi	-
520/85 R38 Dual Wheels	Lug	155 A8	-	-	20 psi	-

*BH - Tow Behind only *BT - Tow Between only

Calibration Formulas - Imperial

Rotations of Crank for 1/10 Acre:

For 26" Rim = (62726.4/W)/Tc

For 32" Rim = (82328.4/W)/Tc

For 38" Rim = (82328.4/W)/Tc **R** = _____

Tire Sprocket Size:

For 26" Rim = 4360/Tc

For 32" Rim = 5992/Tc

For 38" Rim = 5992/Tc **Ts** = _____

Monitor PP400 Setting:

For 26" Rim = 56244/Tc

For 32" Rim = 80640/Tc

For 38" Rim = 80640/Tc **PP400 =** _____

Tc = Tire Circumference measured in inches

W = Working Width measured in feet

Seed Plate Usage

Rate Calibration - Continued

Seed Plate Usage	
Product	**Seed Plate**
Canola Canary Seed Clover/Alfalfa Flax Mustard Nitragin Edge Fortress Rival	Fine
Barley Lentils Milo Oats Rice Wheat Safflower Nodulator Tag Team Fine Fertilizer (no Sulphur or Potash) 28-0-0 Fertilizer 46-0-0 Fertilizer 34-17-0 Fertilizer 20.5-0-0-24 Fertilizer	Medium
Beans Peas Soybeans Sunflowers 0-0-60 Fertilizer 0-45-0 Fertilizer 10-46-0-0 Fertilizer 11-51-0 Fertilizer Fertilizers containing Sulphur and/or Potash	Coarse

- Ensure correct seed plates are installed.
- Fill tank 1/2 full and drive 600 - 1000 feet to compact product in the tanks.
- Select and install meter rate sprocket per Rate Chart.
- Set Flapper Valves to the **"Calibration"** position.
- Remove the collector bottom from the bottom of the collector body.

Note: Seed Plate Chart is a suggested usage. Product variations could require a different seed plate to be used for proper metering.

i.e. Clean 11-51-0 Fertilizer may require a Medium seed plate to reduce product flow.



Viewed from Front

Important

Flapper Valves must be set to "CALIBRATION"

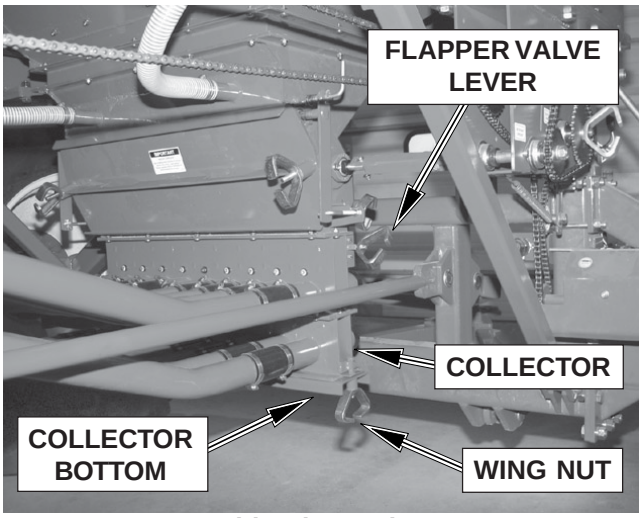

Double Shoot Shown

Calibration - Continued

Rate Calibration - Continued

- Hook the Rate Calibration Insert on collector bottom and rotate up into postion. Secure in place with slide lock.
- Remove the metering chain from the transmissions that are **not** being checked.
- Turn the crank until material begins to fall through the collector body.
- Slide rate check box on the collector body.
- Turn the crank in direction of the arrow (Counter Clockwise) the required number of turns (**R**).

Note: The fan must not be running when a rate check is performed.

Note: Incorrect rates will occur if crank is rotated clockwise or not turned precisely the correct number of turns.

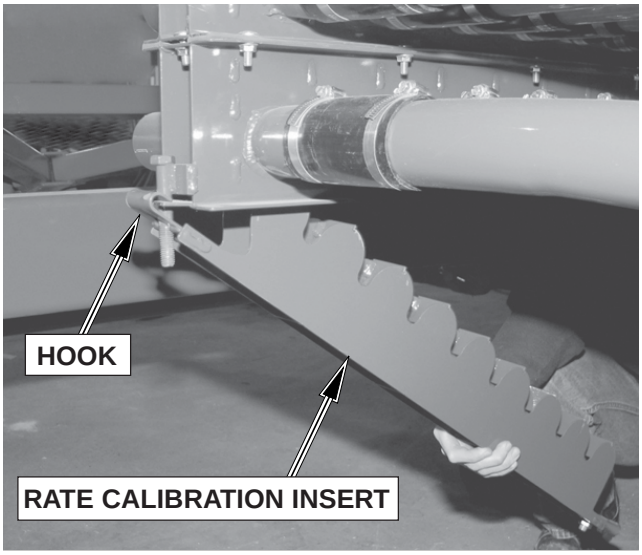

Tow Behind - Calibration Insert



Tow Between - Calibration Insert

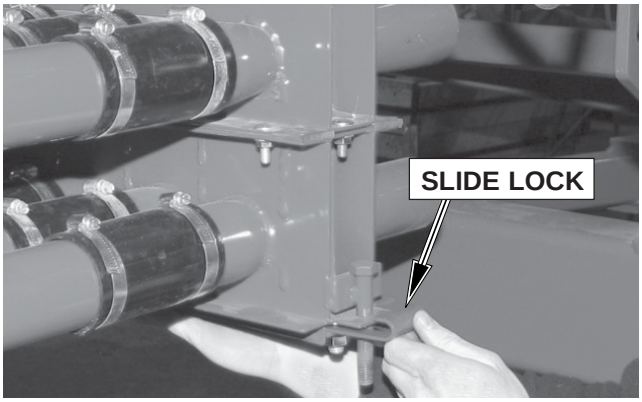

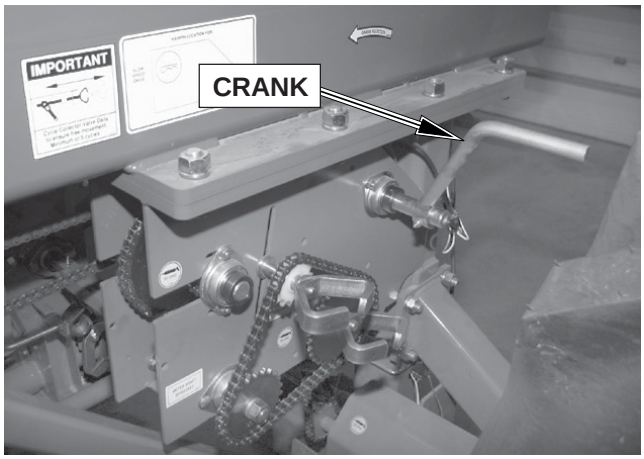

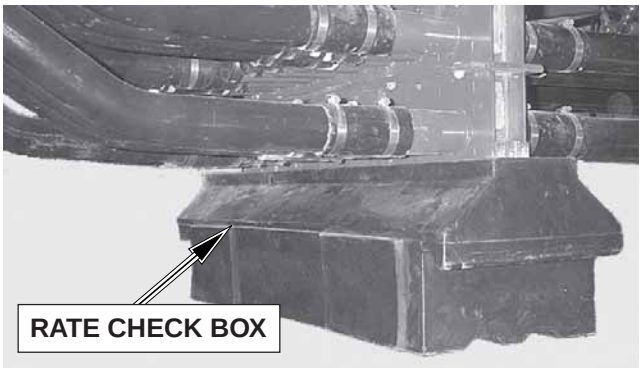

Calibration - Continued

Rate Calibration - Continued

- Weigh the sample by using tarp straps to hook rate check box to scale.

Note: Remember to subtract the weight of the rate check box from the total sample weight.

- Check this rate against rate required.

  For 1/10 acre sample:

  Rate = lbs/acre = Sample Weight (lbs) x 10

- If a different rate is required then increase or decrease the size of the rate change sprocket. Increasing the sprocket size will increase the rate and vice versa.
- Remove rate calibration insert and replace the bottom of the collector.
- Follow the above procedure to check the rate of the other tanks.
- Once calibration checks have been completed place rate check box into storage bracket.
- After seeding a few acres recalibrate for more accurate results.

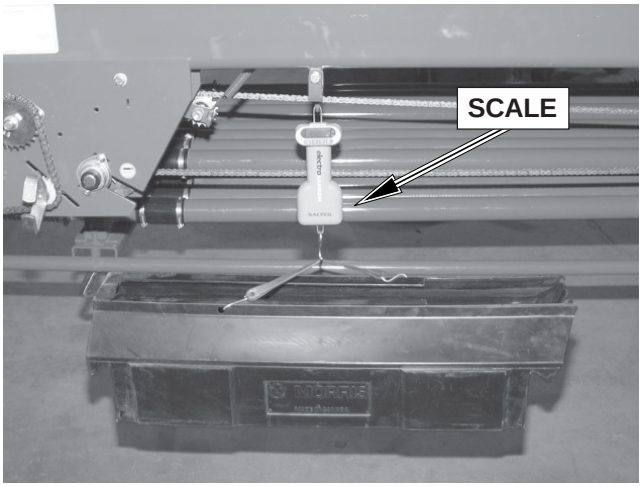

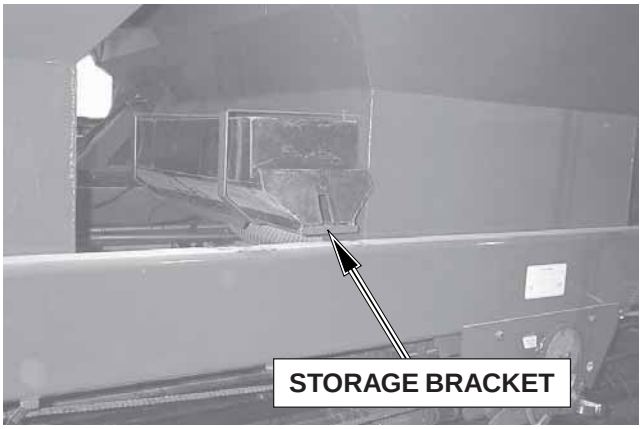

For all **Low Rates** (less than 10 lb/ac) it is recommended to take a large sample. Typically to take a sample for 1/2 acre or 1 acre.

Example:

For 1/2 acre sample for a 71ft wide seeding tool with a 8650 with 520/85R38 Dual Tires:

The number of crank turns required for a 1/2 acre is the number of turns required for 1/10 acre for a specific machine width x 5.

From the Calibration Table

Turns required for 1/10 acre = 5.42

Turns required for 1/2 acre = 5.42 x 5 = 27.1

Rate = lbs/acre
= 1/2 acre sample weight (lbs) x 2

Calibration - Continued

Imperial Crank Calibration Table

8240 Tow Between and Tow Behind - Standard Tires
8300 & 8336 Tow Behind - Standard Tires

Calibration table based on 1/10 of an acre
W = machine width (feet)
F = Optional Acre Tally Factor = 56/R
R = Crank Rotations # turns
for 1/10 acre = 348.5/W for 8336 with 23.1 x 26 AWT Tires
for 1/10 acre = 316.8/W for 8336 with 23.1 x 26 Rice Tires

D = Distance required for 1/10 Acre (feet) = 4356/W

Important

Tire circumference affects metering accuracy. Tire circumference should be checked for your field conditions. To determine actual circumference follow procedure outlined under *"Determining Tire Circumference"* then determine "New Crank Rotations" below.

$$\text{New Crank Rotations} = \left(\frac{D \times 12}{\text{Tire Circumference}}\right) \times \frac{48}{15} \times \frac{18}{48} = \_\_\_\_$$

See rear of book for Metric calibration table.

EIGHT Series XL Air Cart

IMPERIAL CRANK CALIBRATION TABLE

Width	Air Cart Model				Distance	Width	Air Cart Model				Distance
	8240 Tow Between						**8240 Tow Between**				
	8240, 8300 & 8336 Tow Behind						**8240, 8300 & 8336 Tow Behind**				
[W]	AWT Tire 23.1 x 26 12 ply at 28 psi		RICE Tire 23.1 x 26 10 ply at 24 psi		[D]	[W]	AWT Tire 23.1 x 26 12 ply at 28 psi		RICE Tire 23.1 x 26 10 ply at 24 psi		[D]
(ft)	[R]	[F]	[R]	[F]	(ft)	(ft)	[R]	[F]	[R]	[F]	(ft)
21	16.60	3.37	15.09	3.71	207.43	51	6.83	8.20	6.21	9.02	85.41
22	15.84	3.54	14.40	3.89	198.00	52	6.70	8.36	6.09	9.19	83.77
23	15.15	3.70	13.77	4.07	189.39	53	6.58	8.52	5.98	9.37	82.19
24	14.52	3.86	13.20	4.24	181.50	54	6.45	8.68	5.87	9.55	80.67
25	13.94	4.02	12.67	4.42	174.24	55	6.34	8.84	5.76	9.72	79.20
26	13.40	4.18	12.18	4.60	167.54	56	6.22	9.00	5.66	9.90	77.79
27	12.91	4.34	11.73	4.77	161.33	57	6.11	9.16	5.56	10.08	76.42
28	12.45	4.50	11.31	4.95	155.57	58	6.01	9.32	5.46	10.25	75.10
29	12.02	4.66	10.92	5.13	150.21	59	5.91	9.48	5.37	10.43	73.83
30	11.62	4.82	10.56	5.30	145.20	60	5.81	9.64	5.28	10.61	72.60
31	11.24	4.98	10.22	5.48	140.52	61	5.71	9.80	5.19	10.78	71.41
32	10.89	5.14	9.90	5.66	136.13	62	5.62	9.96	5.11	10.96	70.26
33	10.56	5.30	9.60	5.83	132.00	63	5.53	10.12	5.03	11.14	69.14
34	10.25	5.46	9.32	6.01	128.12	64	5.45	10.28	4.95	11.31	68.06
35	9.96	5.62	9.05	6.19	124.46	65	5.36	10.44	4.87	11.49	67.02
36	9.68	5.78	8.80	6.36	121.00	66	5.28	10.61	4.80	11.67	66.00
37	9.42	5.95	8.56	6.54	117.73	67	5.20	10.77	4.73	11.84	65.01
38	9.17	6.11	8.34	6.72	114.63	68	5.13	10.93	4.66	12.02	64.06
39	8.94	6.27	8.12	6.89	111.69	69	5.05	11.09	4.59	12.20	63.13
40	8.71	6.43	7.92	7.07	108.90	70	4.98	11.25	4.53	12.37	62.23
41	8.50	6.59	7.73	7.25	106.24	71	4.91	11.41	4.46	12.55	61.35
42	8.30	6.75	7.54	7.42	103.71	72	4.84	11.57	4.40	12.73	60.50
43	8.10	6.91	7.37	7.60	101.30	73	4.77	11.73	4.34	12.90	59.67
44	7.92	7.07	7.20	7.78	99.00	74	4.71	11.89	4.28	13.08	58.86
45	7.74	7.23	7.04	7.95	96.80	75	4.65	12.05	4.22	13.26	58.08
46	7.58	7.39	6.89	8.13	94.70	76	4.59	12.21	4.17	13.43	57.32
47	7.41	7.55	6.74	8.31	92.68	77	4.53	12.37	4.11	13.61	56.57
48	7.26	7.71	6.60	8.48	90.75	78	4.47	12.53	4.06	13.79	55.85
49	7.11	7.87	6.47	8.66	88.90	79	4.41	12.69	4.01	13.96	55.14
50	6.97	8.03	6.34	8.84	87.12	80	4.36	12.86	3.96	14.14	54.45

Calibration - Continued

Imperial Crank Calibration Table - Continued

8240 Tow Between and Tow Behind - Optional Tires
8300 & 8336 Tow Behind - Optional Tires

Calibration table based on 1/10 of an acre
W = machine width (feet)
F = Optional Acre Tally Factor = 56/R
R = Crank Rotations # turns
for 1/10 acre = 390.18/W for 30.5 x 32 12 ply AWT Tires @ 20 psi
for 1/10 acre = 393.92/W for with 30.5 x 32 14 ply Lug Tires @ 20 psi
for 1/10 acre = 390.37/W for 800/65 R32 L1 172 Lug Tires @ 15 psi

D = Distance required for 1/10 Acre (feet) = 4356/W

$$\text{New Crank Rotations} = \left(\frac{D \times 12}{\text{Tire Circumference}}\right) \times \frac{63}{15} \times \frac{18}{48} = \_\_\_\_\_$$

Important

Tire circumference affects metering accuracy. Tire circumference should be checked for your field conditions. To determine actual circumference follow procedure outlined under *"Determining Tire Circumference"* then determine "New Crank Rotations" below.

EIGHT Series XL Air Cart

IMPERIAL CRANK CALIBRATION TABLE

Width	Air Cart Model						Distance	Width	Air Cart Model						Distance
	8240 Tow Between								8240 Tow Between						
	8240 & 8300, 8336 Tow Behind								8240 & 8300, 8336 Tow Behind						
[W]	AWT Tire 30.5 x 32 12 ply at 20 psi		LUG Tire 30.5 x 32 14 ply at 20 psi		LUG Tire 800/65 R32 L1 172 at 15 psi		[D]	[W]	AWT Tire 30.5 x 32 12 ply at 20 psi		LUG Tire 30.5 x 32 14 ply at 20 psi		LUG Tire 800/65 R32 L1 172 at 15 psi		[D]
(ft)	[R]	[F]	[R]	[F]	[R]	[F]	(ft)	(ft)	[R]	[F]	[R]	[F]	[R]	[F]	(ft)
21	18.58	3.01	18.76	2.99	18.59	3.01	207.43	51	7.65	7.32	7.72	7.25	7.65	7.32	85.41
22	17.74	3.16	17.91	3.13	17.74	3.16	198.00	52	7.50	7.46	7.58	7.39	7.51	7.46	83.77
23	16.96	3.30	17.13	3.27	16.97	3.30	189.39	53	7.36	7.61	7.43	7.53	7.37	7.60	82.19
24	16.26	3.44	16.41	3.41	16.27	3.44	181.50	54	7.23	7.75	7.29	7.68	7.23	7.75	80.67
25	15.61	3.59	15.76	3.55	15.61	3.59	174.24	55	7.09	7.89	7.16	7.82	7.10	7.89	79.20
26	15.01	3.73	15.15	3.70	15.01	3.73	167.54	56	6.97	8.04	7.03	7.96	6.97	8.03	77.79
27	14.45	3.88	14.59	3.84	14.46	3.87	161.33	57	6.85	8.18	6.91	8.10	6.85	8.18	76.42
28	13.94	4.02	14.07	3.98	13.94	4.02	155.57	58	6.73	8.32	6.79	8.25	6.73	8.32	75.10
29	13.45	4.16	13.58	4.12	13.46	4.16	150.21	59	6.61	8.47	6.68	8.39	6.62	8.46	73.83
30	13.01	4.31	13.13	4.26	13.01	4.30	145.20	60	6.50	8.61	6.57	8.53	6.51	8.61	72.60
31	12.59	4.45	12.71	4.41	12.59	4.45	140.52	61	6.40	8.75	6.46	8.67	6.40	8.75	71.41
32	12.19	4.59	12.31	4.55	12.20	4.59	136.13	62	6.29	8.90	6.35	8.81	6.30	8.89	70.26
33	11.82	4.74	11.94	4.69	11.83	4.73	132.00	63	6.19	9.04	6.25	8.96	6.20	9.04	69.14
34	11.48	4.88	11.59	4.83	11.48	4.88	128.12	64	6.10	9.19	6.16	9.10	6.10	9.18	68.06
35	11.15	5.02	11.25	4.98	11.15	5.02	124.46	65	6.00	9.33	6.06	9.24	6.01	9.32	67.02
36	10.84	5.17	10.94	5.12	10.84	5.16	121.00	66	5.91	9.47	5.97	9.38	5.91	9.47	66.00
37	10.55	5.31	10.65	5.26	10.55	5.31	117.73	67	5.82	9.62	5.88	9.52	5.83	9.61	65.01
38	10.27	5.45	10.37	5.40	10.27	5.45	114.63	68	5.74	9.76	5.79	9.67	5.74	9.75	64.06
39	10.00	5.60	10.10	5.54	10.01	5.59	111.69	69	5.65	9.90	5.71	9.81	5.66	9.90	63.13
40	9.75	5.74	9.85	5.69	9.76	5.74	108.90	70	5.57	10.05	5.63	9.95	5.58	10.04	62.23
41	9.52	5.88	9.61	5.83	9.52	5.88	106.24	71	5.50	10.19	5.55	10.09	5.50	10.19	61.35
42	9.29	6.03	9.38	5.97	9.29	6.03	103.71	72	5.42	10.33	5.47	10.24	5.42	10.33	60.50
43	9.07	6.17	9.16	6.11	9.08	6.17	101.30	73	5.34	10.48	5.40	10.38	5.35	10.47	59.67
44	8.87	6.32	8.95	6.26	8.87	6.31	99.00	74	5.27	10.62	5.32	10.52	5.28	10.62	58.86
45	8.67	6.46	8.75	6.40	8.67	6.46	96.80	75	5.20	10.76	5.25	10.66	5.20	10.76	58.08
46	8.48	6.60	8.56	6.54	8.49	6.60	94.70	76	5.13	10.91	5.18	10.80	5.14	10.90	57.32
47	8.30	6.75	8.38	6.68	8.31	6.74	92.68	77	5.07	11.05	5.12	10.95	5.07	11.05	56.57
48	8.13	6.89	8.21	6.82	8.13	6.89	90.75	78	5.00	11.19	5.05	11.09	5.00	11.19	55.85
49	7.96	7.03	8.04	6.97	7.97	7.03	88.90	79	4.94	11.34	4.99	11.23	4.94	11.33	55.14
50	7.80	7.18	7.88	7.11	7.81	7.17	87.12	80	4.88	11.48	4.92	11.37	4.88	11.48	54.45

Calibration - Continued

Imperial Crank Calibration Table - Continued

8300, 8336, 8370 & 8425 Tow Between
8370 & 8425 Tow Behind

Calibration table based on 1/10 of an acre
W = machine width (feet)
F = Optional Acre Tally Factor = 56/R
R = Crank Rotations # turns
for 1/10 acre = 388.25/W for 30.5 x 32 12 ply AWT Tires @ 24 psi
for 1/10 acre = 388.71/W for 30.5 x 32 14 ply Lug Tires @ 22 psi
for 1/10 acre = 389.26/W for 800/65 R32 L1 172 Lug Tires @ 20 psi

D = Distance required for 1/10 Acre (feet) = 4356/W

Important

Tire circumference affects metering accuracy. Tire circumference should be checked for your field conditions. To determine actual circumference follow procedure outlined under *"Determining Tire Circumference"* then determine "New Crank Rotations" below.

$$\text{New Crank Rotations} = \left(\frac{D \times 12}{\text{Tire Circumference}}\right) \times \frac{63}{15} \times \frac{18}{48} = \_\_\_\_\_$$

See rear of book for Metric calibration table.

EIGHT Series XL Air Cart

IMPERIAL CRANK CALIBRATION TABLE

Width	Air Cart Model						Distance	Width	Air Cart Model						Distance
	8300, 8336, 8370 & 8425 Tow Between 8370 & 8425 Tow Behind								8300, 8336, 8370 & 8425 Tow Between 8370 & 8425 Tow Behind						
[W]	AWT Tire 30.5 x 32 12 ply at 24 psi		LUG Tire 30.5 x 32 14 ply at 22 psi		LUG Tire 800/65 R32 L1 172 at 20 psi		[D]	[W]	AWT Tire 30.5 x 32 12 ply at 24 psi		LUG Tire 30.5 x 32 14 ply at 22 psi		LUG Tire 800/65 R32 L1 172 at 20 psi		[D]
(ft)	[R]	[F]	[R]	[F]	[R]	[F]	(ft)	(ft)	[R]	[F]	[R]	[F]	[R]	[F]	(ft)
21	18.49	3.03	18.51	3.03	18.54	3.02	207.43	51	7.61	7.36	7.62	7.35	7.63	7.34	85.41
22	17.65	3.17	17.67	3.17	17.69	3.16	198.00	52	7.47	7.50	7.48	7.49	7.49	7.48	83.77
23	16.88	3.32	16.90	3.31	16.92	3.31	189.39	53	7.33	7.64	7.33	7.64	7.34	7.62	82.19
24	16.18	3.46	16.20	3.46	16.22	3.45	181.50	54	7.19	7.79	7.20	7.78	7.21	7.77	80.67
25	15.53	3.61	15.55	3.60	15.57	3.60	174.24	55	7.06	7.93	7.07	7.92	7.08	7.91	79.20
26	14.93	3.75	14.95	3.75	14.97	3.74	167.54	56	6.93	8.08	6.94	8.07	6.95	8.06	77.79
27	14.38	3.89	14.40	3.89	14.42	3.88	161.33	57	6.81	8.22	6.82	8.21	6.83	8.20	76.42
28	13.87	4.04	13.88	4.03	13.90	4.03	155.57	58	6.69	8.37	6.70	8.36	6.71	8.34	75.10
29	13.39	4.18	13.40	4.18	13.42	4.17	150.21	59	6.58	8.51	6.59	8.50	6.60	8.49	73.83
30	12.94	4.33	12.96	4.32	12.98	4.32	145.20	60	6.47	8.65	6.48	8.64	6.49	8.63	72.60
31	12.52	4.47	12.54	4.47	12.56	4.46	140.52	61	6.36	8.80	6.37	8.79	6.38	8.78	71.41
32	12.13	4.62	12.15	4.61	12.16	4.60	136.13	62	6.26	8.94	6.27	8.93	6.28	8.92	70.26
33	11.77	4.76	11.78	4.75	11.80	4.75	132.00	63	6.16	9.09	6.17	9.08	6.18	9.06	69.14
34	11.42	4.90	11.43	4.90	11.45	4.89	128.12	64	6.07	9.23	6.07	9.22	6.08	9.21	68.06
35	11.09	5.05	11.11	5.04	11.12	5.04	124.46	65	5.97	9.38	5.98	9.36	5.99	9.35	67.02
36	10.78	5.19	10.80	5.19	10.81	5.18	121.00	66	5.88	9.52	5.89	9.51	5.90	9.49	66.00
37	10.49	5.34	10.51	5.33	10.52	5.32	117.73	67	5.79	9.66	5.80	9.65	5.81	9.64	65.01
38	10.22	5.48	10.23	5.47	10.24	5.47	114.63	68	5.71	9.81	5.72	9.80	5.72	9.78	64.06
39	9.96	5.63	9.97	5.62	9.98	5.61	111.69	69	5.63	9.95	5.63	9.94	5.64	9.93	63.13
40	9.71	5.77	9.72	5.76	9.73	5.75	108.90	70	5.55	10.10	5.55	10.08	5.56	10.07	62.23
41	9.47	5.91	9.48	5.91	9.49	5.90	106.24	71	5.47	10.24	5.47	10.23	5.48	10.21	61.35
42	9.24	6.06	9.26	6.05	9.27	6.04	103.71	72	5.39	10.39	5.40	10.37	5.41	10.36	60.50
43	9.03	6.20	9.04	6.19	9.05	6.19	101.30	73	5.32	10.53	5.32	10.52	5.33	10.50	59.67
44	8.82	6.35	8.83	6.34	8.85	6.33	99.00	74	5.25	10.67	5.25	10.66	5.26	10.65	58.86
45	8.63	6.49	8.64	6.48	8.65	6.47	96.80	75	5.18	10.82	5.18	10.80	5.19	10.79	58.08
46	8.44	6.63	8.45	6.63	8.46	6.62	94.70	76	5.11	10.96	5.11	10.95	5.12	10.93	57.32
47	8.26	6.78	8.27	6.77	8.28	6.76	92.68	77	5.04	11.11	5.05	11.09	5.06	11.08	56.57
48	8.09	6.92	8.10	6.92	8.11	6.91	90.75	78	4.98	11.25	4.98	11.24	4.99	11.22	55.85
49	7.92	7.07	7.93	7.06	7.94	7.05	88.90	79	4.91	11.39	4.92	11.38	4.93	11.37	55.14
50	7.77	7.21	7.77	7.20	7.79	7.19	87.12	80	4.85	11.54	4.86	11.53	4.87	11.51	54.45

Calibration - Continued

Imperial Crank Calibration Table - Continued

8435, 8630 and 8650 - Standard Tire
All Other Models - Optional Tire

Calibration table based on 1/10 of an acre
W = machine width (feet)
F = Optional Acre Tally Factor = 56/R
R = Crank Rotations # turns
for 1/10 acre = 363.96/W for 900/60 R32 176 A8 Tires @ 17 psi

D = Distance required for 1/10 Acre (feet) = 4356/W

Important

Tire circumference affects metering accuracy. Tire circumference should be checked for your field conditions. To determine actual circumference follow procedure outlined under *"Determining Tire Circumference"* then determine "New Crank Rotations" below.

$$\text{New Crank Rotations} = \left(\frac{D \times 12}{\text{Tire Circumference}}\right) \times \frac{63}{15} \times \frac{18}{48} = \_\_\_\_\_$$

EIGHT Series XL Air Cart

IMPERIAL CRANK CALIBRATION TABLE

Width	Air Cart Model		Distance	Width	Air Cart Model		Distance
	All Models				**All Models**		
[W]	LUG Tire 900/60 R32 176 A8 at 17 psi		[D]	[W]	LUG Tire 900/60 R32 176 A8 at 17 psi		[D]
(ft)	[R]	[F]	(ft)	(ft)	[R]	[F]	(ft)
21	17.33	3.23	207.43	51	7.14	7.85	85.41
22	16.54	3.38	198.00	52	7.00	8.00	83.77
23	15.82	3.54	189.39	53	6.87	8.15	82.19
24	15.17	3.69	181.50	54	6.74	8.31	80.67
25	14.56	3.85	174.24	55	6.62	8.46	79.20
26	14.00	4.00	167.54	56	6.50	8.62	77.79
27	13.48	4.15	161.33	57	6.39	8.77	76.42
28	13.00	4.31	155.57	58	6.28	8.92	75.10
29	12.55	4.46	150.21	59	6.17	9.08	73.83
30	12.13	4.62	145.20	60	6.07	9.23	72.60
31	11.74	4.77	140.52	61	5.97	9.39	71.41
32	11.37	4.92	136.13	62	5.87	9.54	70.26
33	11.03	5.08	132.00	63	5.78	9.69	69.14
34	10.70	5.23	128.12	64	5.69	9.85	68.06
35	10.40	5.39	124.46	65	5.60	10.00	67.02
36	10.11	5.54	121.00	66	5.51	10.15	66.00
37	9.84	5.69	117.73	67	5.43	10.31	65.01
38	9.58	5.85	114.63	68	5.35	10.46	64.06
39	9.33	6.00	111.69	69	5.27	10.62	63.13
40	9.10	6.15	108.90	70	5.20	10.77	62.23
41	8.88	6.31	106.24	71	5.13	10.92	61.35
42	8.67	6.46	103.71	72	5.06	11.08	60.50
43	8.46	6.62	101.30	73	4.99	11.23	59.67
44	8.27	6.77	99.00	74	4.92	11.39	58.86
45	8.09	6.92	96.80	75	4.85	11.54	58.08
46	7.91	7.08	94.70	76	4.79	11.69	57.32
47	7.74	7.23	92.68	77	4.73	11.85	56.57
48	7.58	7.39	90.75	78	4.67	12.00	55.85
49	7.43	7.54	88.90	79	4.61	12.16	55.14
50	7.28	7.69	87.12	80	4.55	12.31	54.45

Calibration - Continued

Imperial Crank Calibration Table - Continued

8435, 8630 and 8650 - Optional Dual Tires

Calibration table based on 1/10 of an acre
W = machine width (feet)
F = Optional Acre Tally Factor = 56/R
R = Crank Rotations # turns
for 1/10 acre = 385.07/W for 520/85R38 155 A8 Tires @ 20 psi

D = Distance required for 1/10 Acre (feet) = 4356/W

Important

Tire circumference affects metering accuracy. Tire circumference should be checked for your field conditions. To determine actual circumference follow procedure outlined under *"Determining Tire Circumference"* then determine "New Crank Rotations" below.

See rear of book for Metric calibration table.

$$\text{New Crank Rotations} = \left(\frac{D \times 12}{\text{Tire Circumference}}\right) \times \frac{63}{15} \times \frac{18}{48} = \_\_\_\_\_$$

EIGHT Series XL Air Cart

IMPERIAL CRANK CALIBRATION TABLE

Width	Air Cart Model		Distance	Width	Air Cart Model		Distance
	8435, 8630 & 8650				**8435, 8630 & 8650**		
[W]	LUG Tire - DUALS 520/85R38 155 A8 at 20 psi		[D]	[W]	LUG Tire - DUALS 520/85R38 155 A8 at 20 psi		[D]
(ft)	[R]	[F]	(ft)	(ft)	[R]	[F]	(ft)
21	18.34	3.05	207.43	51	7.55	7.42	85.41
22	17.50	3.20	198.00	52	7.41	7.56	83.77
23	16.74	3.34	189.39	53	7.27	7.71	82.19
24	16.04	3.49	181.50	54	7.13	7.85	80.67
25	15.40	3.64	174.24	55	7.00	8.00	79.20
26	14.81	3.78	167.54	56	6.88	8.14	77.79
27	14.26	3.93	161.33	57	6.76	8.29	76.42
28	13.75	4.07	155.57	58	6.64	8.43	75.10
29	13.28	4.22	150.21	59	6.53	8.58	73.83
30	12.84	4.36	145.20	60	6.42	8.73	72.60
31	12.42	4.51	140.52	61	6.31	8.87	71.41
32	12.03	4.65	136.13	62	6.21	9.02	70.26
33	11.67	4.80	132.00	63	6.11	9.16	69.14
34	11.33	4.94	128.12	64	6.02	9.31	68.06
35	11.00	5.09	124.46	65	5.92	9.45	67.02
36	10.70	5.24	121.00	66	5.83	9.60	66.00
37	10.41	5.38	117.73	67	5.75	9.74	65.01
38	10.13	5.53	114.63	68	5.66	9.89	64.06
39	9.87	5.67	111.69	69	5.58	10.03	63.13
40	9.63	5.82	108.90	70	5.50	10.18	62.23
41	9.39	5.96	106.24	71	5.42	10.33	61.35
42	9.17	6.11	103.71	72	5.35	10.47	60.50
43	8.96	6.25	101.30	73	5.27	10.62	59.67
44	8.75	6.40	99.00	74	5.20	10.76	58.86
45	8.56	6.54	96.80	75	5.13	10.91	58.08
46	8.37	6.69	94.70	76	5.07	11.05	57.32
47	8.19	6.84	92.68	77	5.00	11.20	56.57
48	8.02	6.98	90.75	78	4.94	11.34	55.85
49	7.86	7.13	88.90	79	4.87	11.49	55.14
50	7.70	7.27	87.12	80	4.81	11.63	54.45

Calibration - Continued

Seeding Fine Seeds (Canola, Mustard, etc.)

When seeding fine seeds such as canola or mustard, the slow speed transmission has to be engaged to ensure the low rates required for these products.

The slow speed transmission is incorporated in **All** the Posi-Drive Transmissions.

- To engage the slow speed, remove the large hairpin from the front shaft and install through the sleeve and shaft located at the rear of the transmission.

Note: Shaft will have to be rotated to align holes for pin insertion.

- To disengage the slow speed, reverse the above procedure.
- Rate checks can be performed the same way as for other seeds.
- Usually it is necessary to reduce the fan rpm when seeding fine seeds. See *"Fan Speed"* for specific fan speeds.

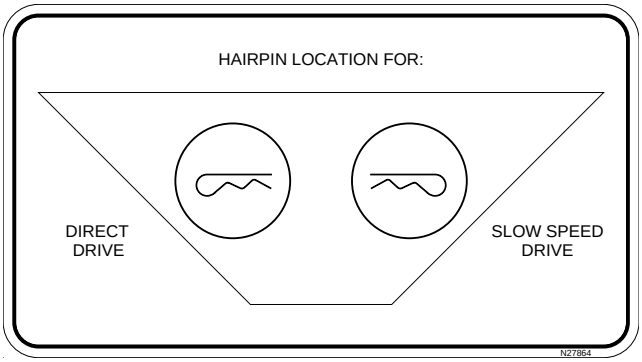

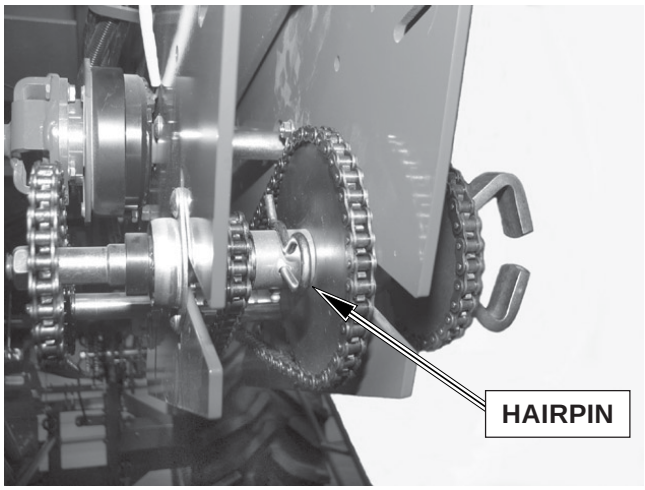

Applying Inoculant

When inoculant is applied at the time of seeding, once the air cart has been filled, the fill-lids should be left open and the fan run for 5-10 minutes at full rpm to dry the seed.

Calibration must be done after the seed is dried, otherwise the calibration will be incorrect.

Note: If the seed is not dried then the seed will have a tendency to bridge and not meter into the air stream.

Monitor N44049 - Version 3

Introduction

The monitor utilizes a multiplexed data communication system to monitor the functions of the Air Cart. In the multiplexed system, all sensors communicate with the monitor on the same three wires.

The system can monitor and display status of the following functions:

- Fan speed
- Ground speed
- Shaft speeds (up to 4)
- Bin levels (up to 4)
- Flow Blockage (up to 192 runs)

An audio alarm will sound upon detection of: low or high fan speed, low shaft speed, low bin level and failure of sensors. Also, loss of flow in any runs that are being monitored with Blockage Modules will generate alarms. Audio alarms persist until the alarm condition is removed or until the alarm is acknowledged by the operator by pressing the appropriate soft key.

In addition, the monitor can determine and display:

- Field Area
- Total Area
- Application Rate (weight per unit area) (VRT systems only)

The monitor allows the following settings to be changed:

- High and Low fan speed alarm point
- Low shaft speed alarm point for 4 meter shafts
- Ground speed pulses per 400 ft and pulses per revolution
- Pulses per revolution of fan and 4 meter shafts
- Low bin alarm for 4 bins
- The number of Blockage Modules that are connected to the monitor
- The width of the implement
- Imperial or metric units
- English or Russian language

The settings listed above, as well as field and accumulated areas are stored in nonvolatile memory. This means that the information is retained even when power is disconnected.

Two cables exit the rear of the monitor. There is a two wire power cable that connects to the tractor power supply. The other is a three wire cable that brings power and communications to the remote sensors through the main harness.



MONITOR - N44049



CLUTCH SWITCHES

Identifying Monitor Switches

The five keys on the monitor face are used for controlling the monitor.

Power Key • Used to turn monitor on and off.

Up Key • Used for moving function selection icon. Also used to increment parameter when changing settings.

Down Key • Used for moving function selection. Also used for decrementing parameter when changing settings.

Soft Keys • Used to enter menus and selections. Also used for going to next parameter in program mode.

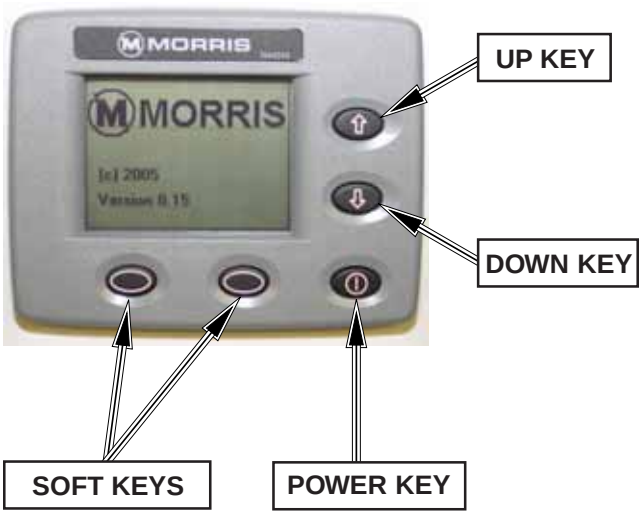

Identifying Monitor Displays

The Operating Screen is divided into the following areas:

- Two small display sections or one enlarged display section
- Active alarm window or, if there are no active alarms, the current ground speed is displayed
- Bin level icon window
- Soft key label windows

ENLARGED DISPLAY SECTION



Pressing soft key under "Smaller" will switch the screen to the 2 - display sections.

TWO – DISPLAY SECTIONS

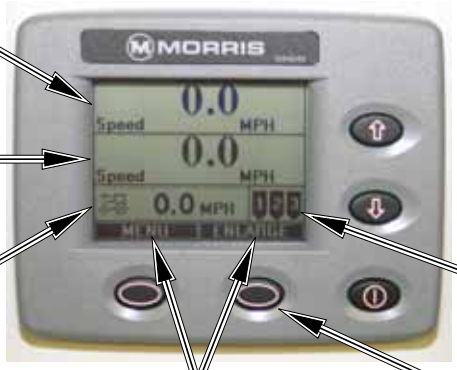

TOP DISPLAY SECTION

BOTTOM DISPLAY SECTION

ACTIVE ALARM WINDOW

BIN LEVEL ICON WINDOW

SOFT KEY LABEL WINDOWS

Pressing soft key under "Enlarge" will switch the screen to the enlarged display section.

Operating Screen

Display Section

The display has two Display Sections on the operating screen. These windows have their data periodically refreshed at ½ to 1- second intervals. Each window has the following information in it:

- Display object name (e.g. Shaft)
- Display object instance (e.g. 1), if applicable
- Display object data (e.g. 7)
- Display object units (e.g. RPM), if applicable

Active Alarm Window

All acknowledged alarms are displayed on the operating screen's "active alarm window" until the alarm condition is removed. If there is only one acknowledged alarm, it will flash on the display in order to draw the user's attention to the continued error. If there is more than one acknowledged alarm they will cycle on the display, with each alarm being displayed on the screen for 2 seconds.

Note: If there are no active alarms, the current ground speed is displayed

See "Alarms" for more details on when an alarm is first observed.

Bin Level Icon Window

The display has one window dedicated to graphically showing the status of product in up to 3 bins. When a bin is empty an alarm will be generated and the corresponding bin icon will flash.

Soft Key Label Windows

The display has two windows displaying the current function of the two available soft keys. The function of the soft keys change depending on the screen being viewed. On Operating Screen, MENU can be accessed with left soft key or bottom display ENLARGED.

Note: Monitor will show "communication errors" if the system installation (Sensor Learn Mode) was not completed. *See Sensor Installation.*



Operating Screen



Operating Screen with Alarm

Operating Screen - Continued

Navigating the Operating Screen

When the UP or DOWN key is pressed in the Operating Screen, this allows the user to select what is shown on the Top Display Section and the Bottom Display Section.

Example: Change the top display from Fan to Shaft 2

1. Press the UP key to enter the “Top Display Section”.
2. Use the UP/DOWN keys to scroll to other display items. Press the DOWN key to highlight “Shaft RPM”.
3. Press the SELECT key to enter “Shaft RPM”, which will display the instances of Shaft RPM.
4. Use the UP/DOWN keys to change the selected shaft to 2.
5. Press the SELECT key to choose shaft 2. This will return the monitor to the main screen and the Top Display Section is no longer displaying Fan, but is now displaying Shaft 2 RPM.

Note: If the DOWN key were pressed in step 1 to enter into this mode, the title of the menu would be “Bottom Display Section” and the bottom display would be changed.

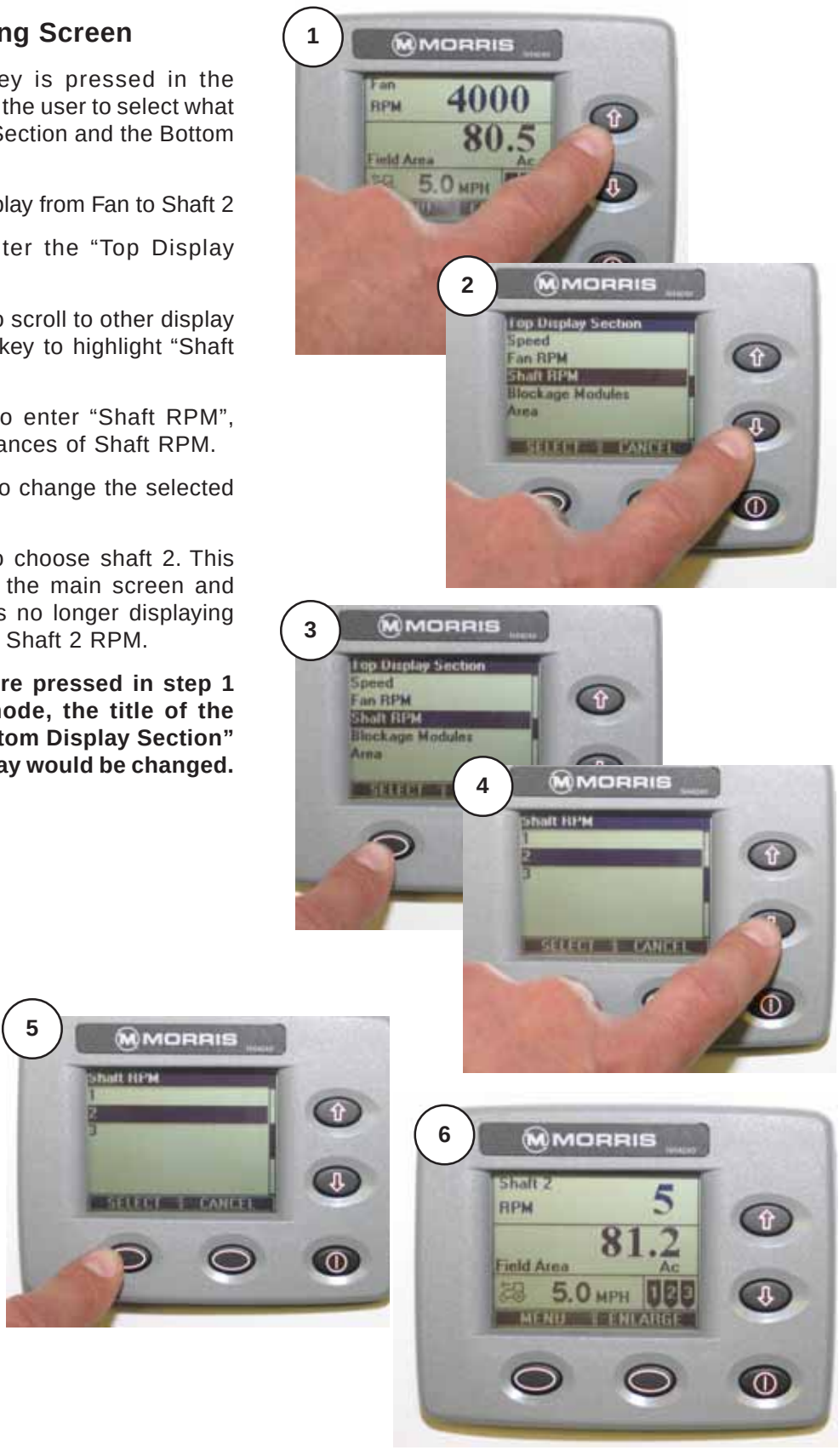

Operating Screen - Continued

Enlarged Operating Screen

If the ENLARGE key is pressed, the Bottom Display Section will expand up into the Top Display Section and the text will increase in size.

When in the enlarged mode, the right most soft key will be re-labeled SMALLER. Press the key, to return to display of top and bottom sections.

In Enlarged mode, the UP and DOWN keys allow changing function displayed on screen.



Press soft key under ENLARGE to enlarge bottom section.



Pressing soft key under SMALLER will switch the screen back to the two - display sections.

Installing Monitor

- Locate monitor and clutch switch in a convenient location in cab.
- Connect power cables directly to a 12V battery.
  - White or Red wires **positive**.
  - Black wires **negative**.
- Route cable harness to seeding tool and Air Cart. Ensure cables clear any pinch points (i.e. tractor articulation point, hitch point, etc.)
- Program monitor as described in *System Installation* and *Monitor Programming* Sections.

Note: Locate monitor, power and ground wires away from radio and antenna if tractor is so equipped.

Note: Do not connect monitor directly to starter switch.



Monitor Harness

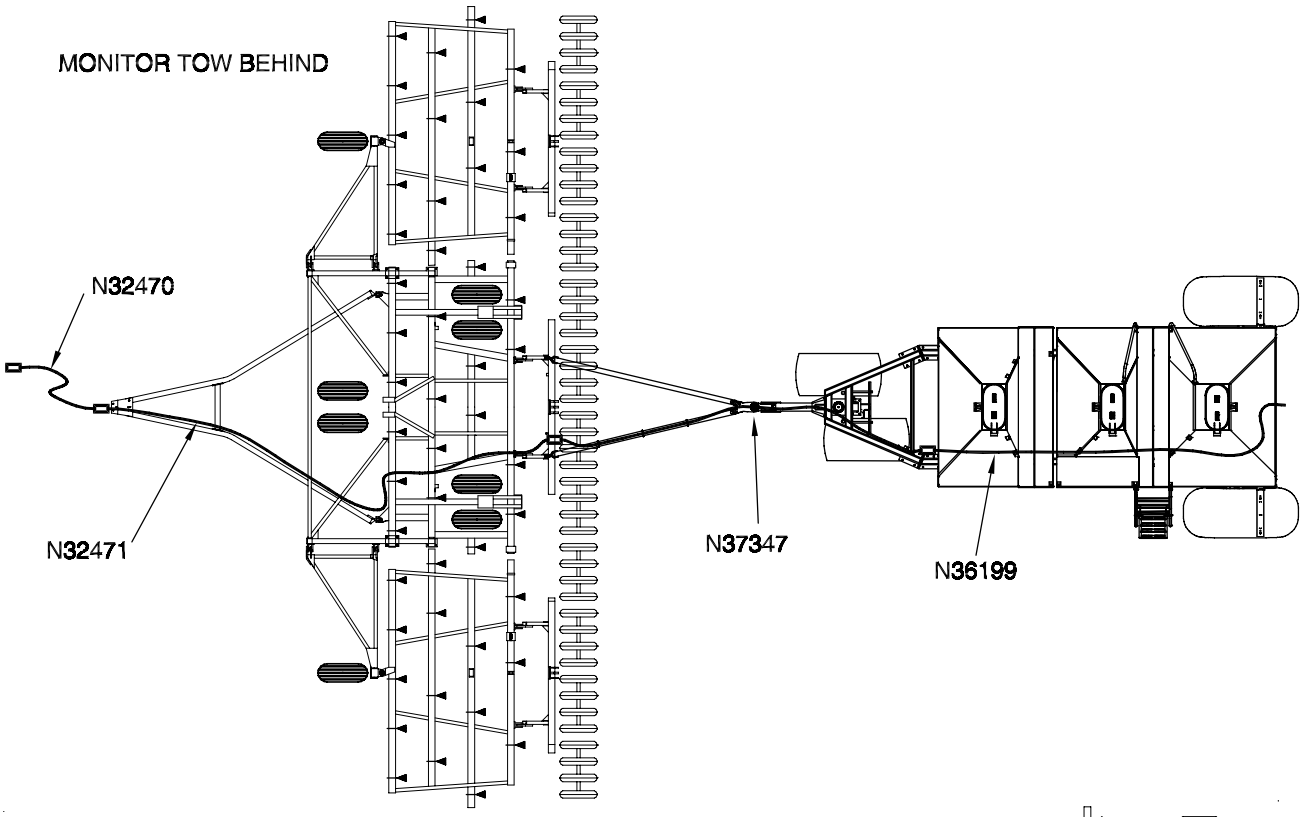

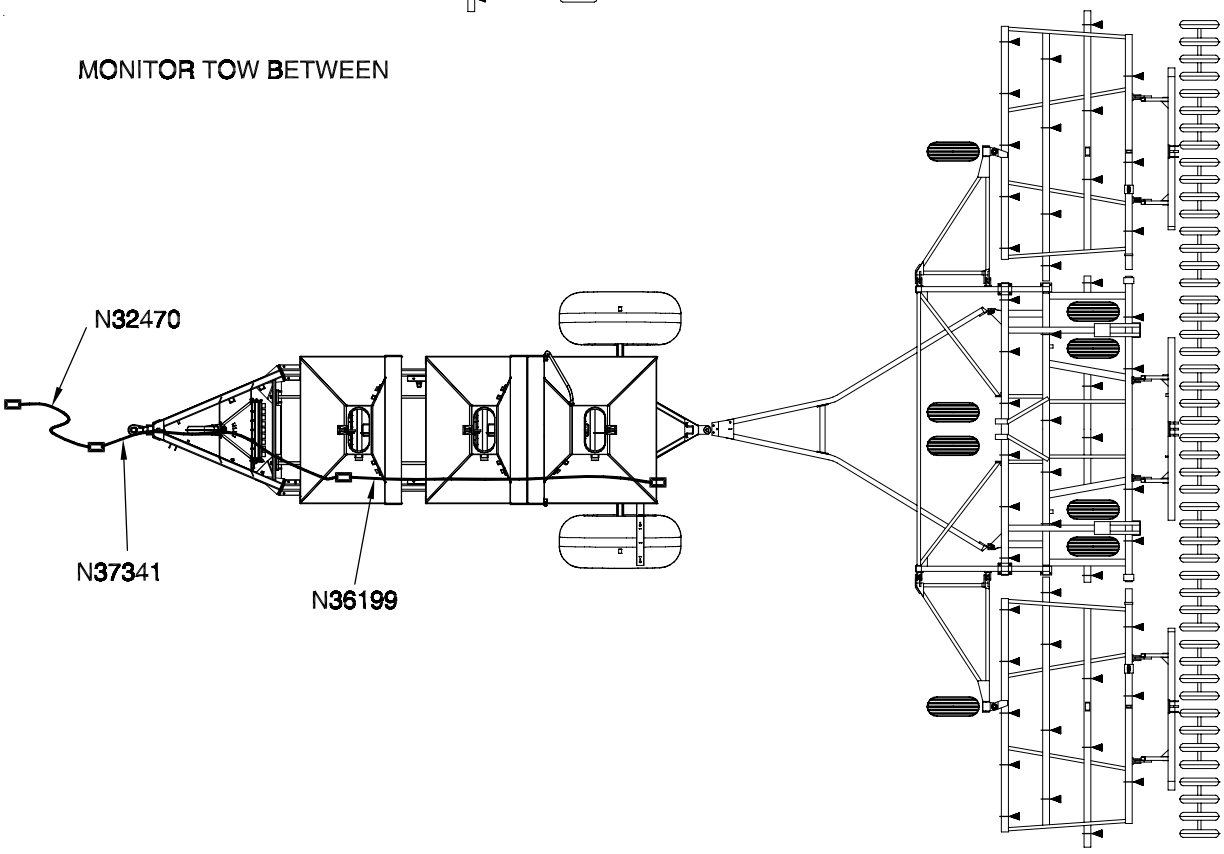

Clutch Harness

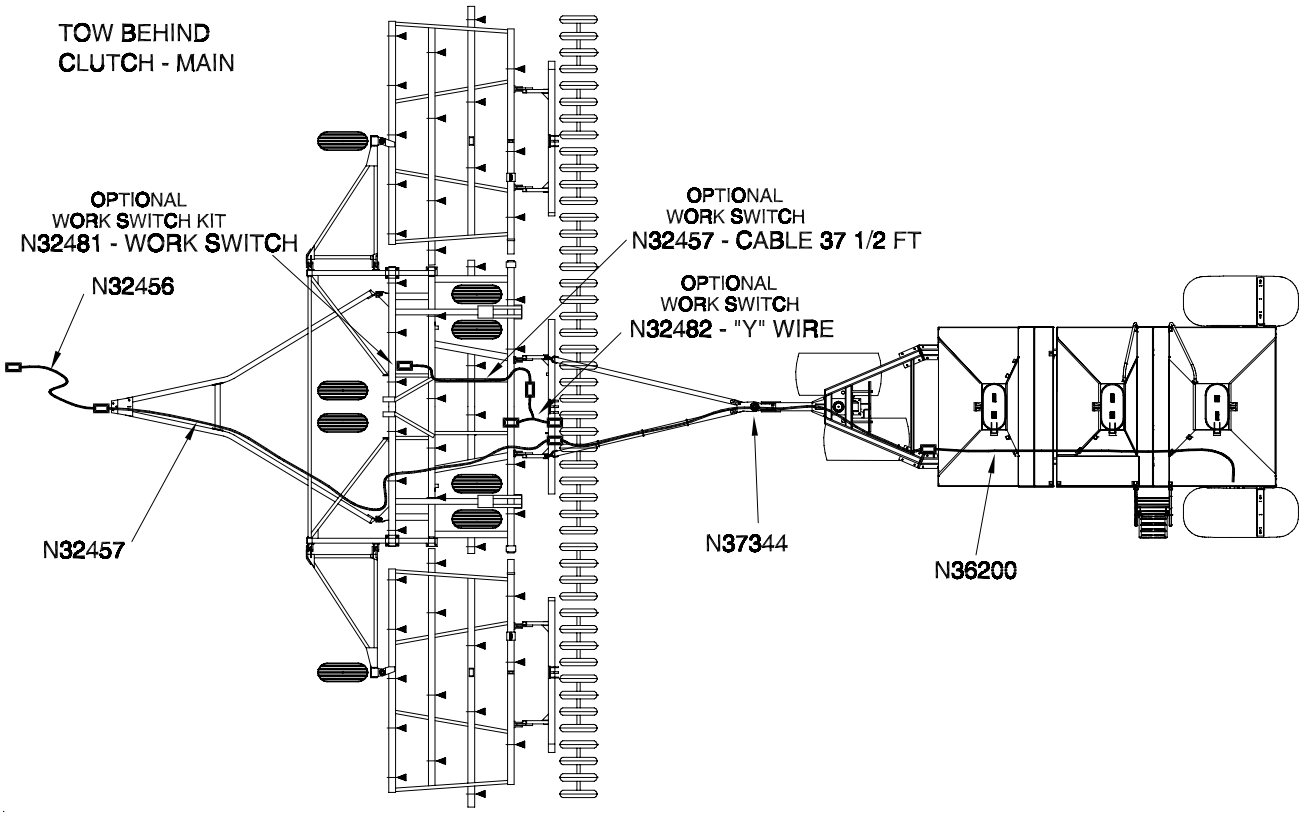

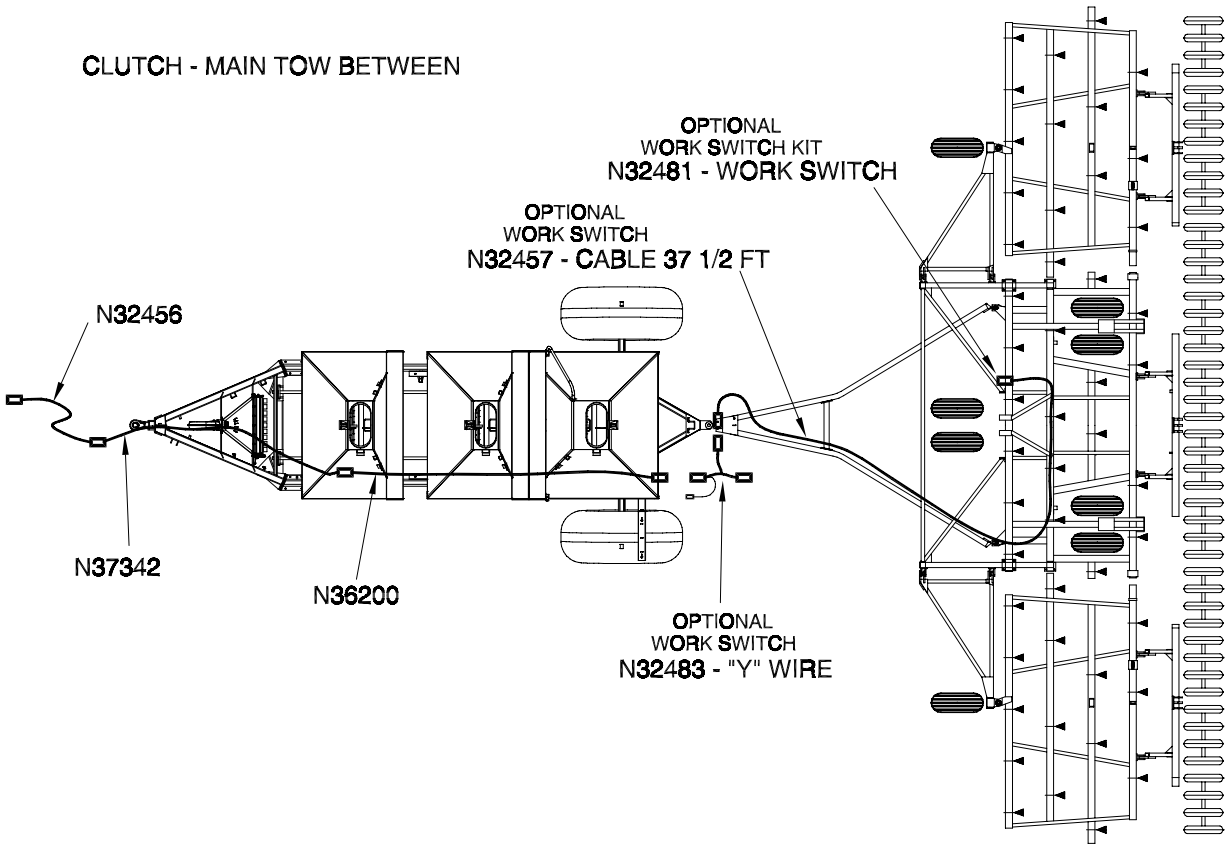

Clutch Harness - Continued

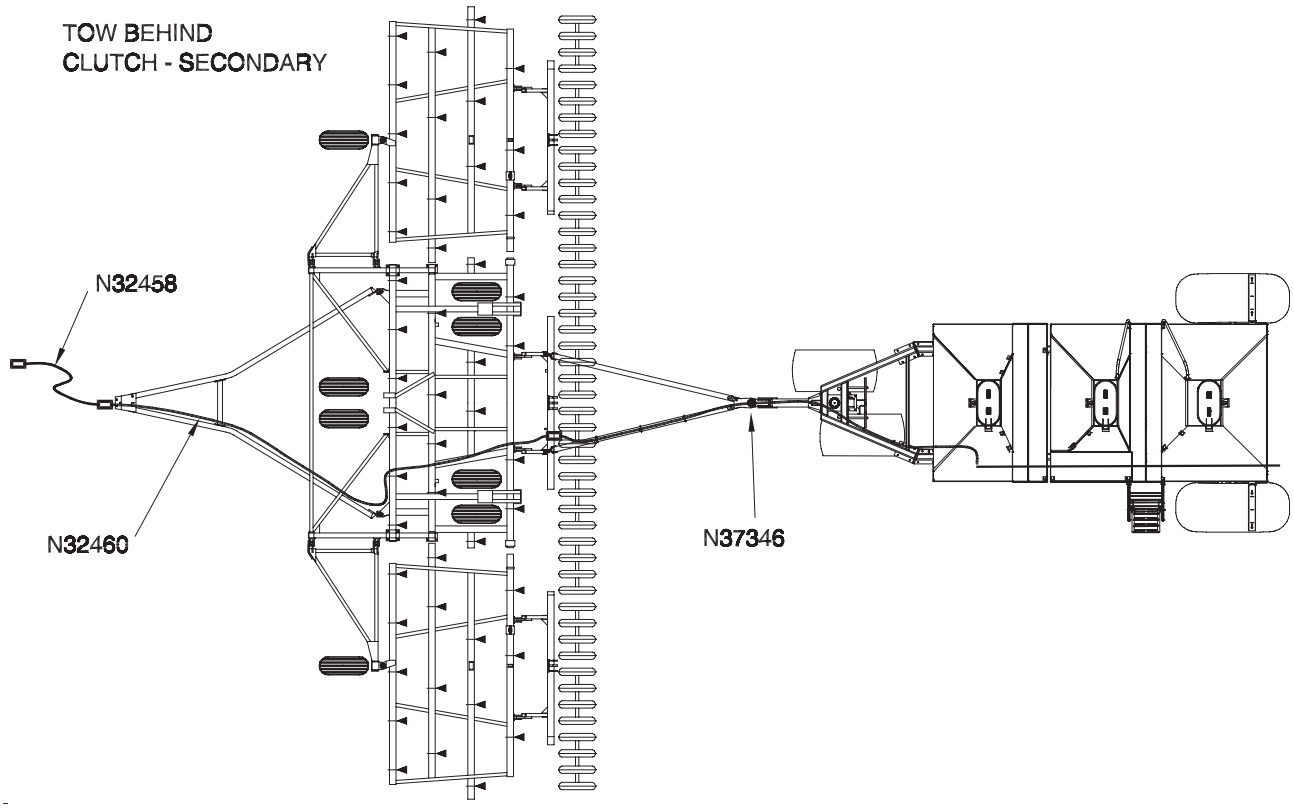

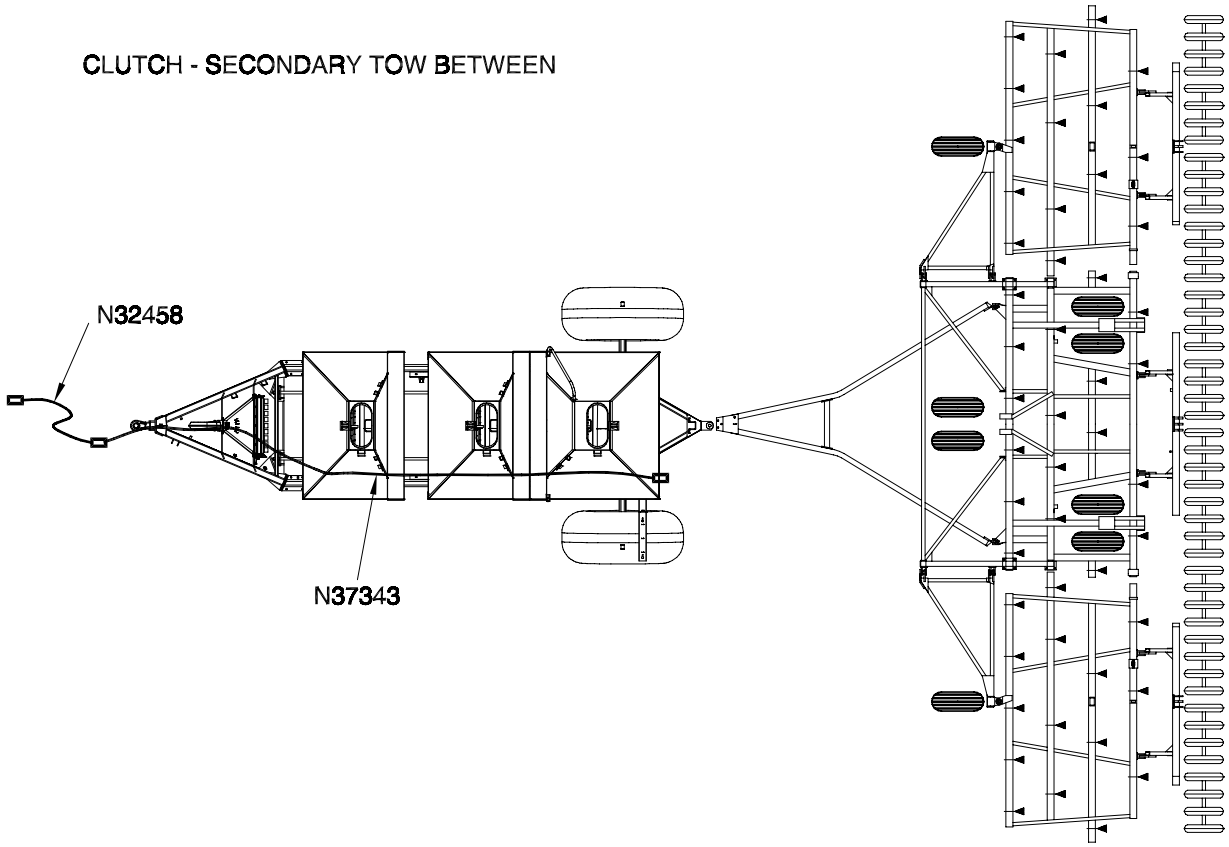

Startup

Power On

Press the Power Key to turn the monitor on.

When the unit is turned on, the following display sequence takes place:

- MORRIS is briefly displayed along with the Version number of the monitor software. **This number should be included with any reports of faulty or unexpected system operation.**

  This Splash Screen is displayed for a short time – long enough to go through the system startup and wakeup all of the sensors (approximately 3 seconds).

- If any sensors are found, the monitor proceeds to the “Operating” screen
- If no sensors are found, the monitor proceeds to the “Installation” Screen.

Monitor ID
Version Number



Splash Screen

Power Off

Press and hold the Power Key for a couple of seconds until the monitor turns off.

Force Language

The user can press and hold the following keys when turning monitor on to force the display to a certain language:

Force English Language

- Press and hold the UP and DOWN keys. Push the power button. Release the UP and DOWN keys after the correct language is shown.

Force Russian Language

- Press and hold Soft key 1 and Soft key 2. Push the power button. Release the UP and DOWN keys after the correct language is shown.

Note: This language setting will not be retained when the monitor is turned off. To retain language setting, go to “Global Settings” and choose “Language” and select “Exit and Save” option.



Operating Screen

Startup - Continued

Startup Menu Screen

The startup menu screen provides the user with four different options:

1) **System Startup** – this will not install any sensors.
2) **Learn New System** – this is used to learn a new compliment of sensors, but not modify the menu parameters that have already been customized by the user.
3) **Default Settings** – this is used to restore all of the menu parameters to the factory configuration.
4) **Learn New System and Default Settings** – this performs the actions of number 2 and number 3 above.



System Startup Screen

Sensor Installation

The installation procedure is required to configure the monitor to the sensors attached to it.

The operator may have to redo the installation if:

1) An extra tank is added to the Air Cart.
2) Replacing or adding sensors.
3) Replacing monitor with a new monitor.

Installation Precautions

1) During installation the monitor has a predetermined order in which it wants the sensors attached. The installer must be sure that the proper sensor is plugged in the proper sequence.
   i.e. If during installation the installer plugs in the Front Shaft and Ground Speed sensors in the wrong order, the monitor would not know this. The monitor would interpret Front Shaft rpm from the Ground Speed shaft and vice versa.
2) There may be occasions when the operator will not have use of all the sensors.
   i) During sensor installation when the monitor prompts for an unused sensor to be plugged in, the operator can press the SELECT key to skip over the sensor. **The sensor will be assigned a disabled status.** A sensor disabled by this method can only be enabled by repeating the installation procedure.
   ii) During operation the operator can disable shaft sensors by setting the pulses per revolution to zero. When pulses are set to zero alarms for that sensor and corresponding Bin Level sensor are ignored and no monitoring occurs.
3) Blockage modules attached to the harness are handled differently than the sensors attached to the harness. See Assembly Section *"Blockage Module".*

   Pin Sensors - the blockage module **does not have to be removed from the harness** during initial system installation.

   Optical Sensors - the blockage modules **have to be unplugged from the harness** before sensor installation can be performed and are connected like the other sensors requested by the monitor during sensor installation.

Note: Each monitor is unique to the sensors installed. If monitor is moved to another Air Cart it has to be reprogrammed to match the sensors.

Sensor Installation Order
Speed (Ground)
Fan 1
Fan 2
Shaft 1
Shaft 2
Shaft 3
Shaft 4
Tank 1
Tank 2
Tank 3
Tank 4
VarCon (Variable Rate) (Unit calls for installation only if var controller is installed)
Optical Blockage Modules



Sensor Installation - Continued

Installation Procedure

1. **Disconnect** all the sensors (3 pin connector) from the harness before turning monitor on.

   Turn monitor on. With no sensors found, the monitor proceeds to the “Startup menu” screen.

   Use the Up/Down keys to select “Learn New System”. Press the soft key below SELECT to enter the “Install New System” mode.

2. The monitor will ask if you want to proceed or exit.

   With “Proceed” highlighted, press the SELECT key to enter the “Install New System” mode.

3. The display will indicate to install the speed sensor indicating that the ground speed sensor may now be connected. Connect the ground speed sensor.

   The monitor will give a double beep when it acknowledges the sensor.

Continued on next page.







Sensor Installation - Continued

Installation Procedure - Continued

4. The display will indicate to install the fan sensor indicating that the fan sensor may now be connected. Connect the fan sensor.

   The process is the same for rest of the sensors in the sequence.

5. When the monitor requests a sensor that **will not be used** in the configuration, use the Up/Down keys to select “Skip this Sensor” and press the soft key below SELECT and the monitor will skip the sensor and advance to the next one in the sequence.

Note: There are **12 Blockage Modules**. To skip past the blockage modules use the Up/Down keys to select “Skip this Type of Sensors” and press the SELECT key, the monitor will skip all of the blockage modules and advance to the next type of sensor in the sequence.

6. When all sensors in the list have either been learned or skipped, the monitor will display “Installation Complete”. Use the Up/Down keys to select “Exit” press the SELECT key to return to the main “Startup Menu”.

   To verify the installation, turn the monitor off, then turn it on again. The monitor will now proceed to the “Operating” screen.





OR





Monitor Settings

Navigating Settings Screens

The settings screens contain all the configuration information required to tailor the monitoring capabilities to the installed system and user preferences. Only setting parameters that are relevant are displayed (i.e. if no Shaft 3 is installed, there will not be any Shaft 3 setting parameters made available).

Pressing the MENU key when in the “Operating Screen” enters this mode.

The menu system is made up of screens that have the following content:

1) A menu title
2) The body of the menu
3) The soft key descriptions - changed to “Select” and “Cancel”.

The Menu Title

The menu title is at the very top of the screen.

This indicates to the user what the rest of the screen is referring to. For example, if the user is in the “Speed Settings” menu, the field “Pulses Per Rev” refers to the ground speed sensor and if the user were in the “Seed Shaft Settings” menu, the field “Pulses Per Rev” would refer to the seed shaft speed sensor.

The menu title line is always highlighted so that it stands out from the rest of the screen.

The Body of the Menu

The main body of the menu is a list of objects. The objects in the menu system will take up 1 or more lines of space. The scroll bar on right hand side of screen indicates where the object is in the list and when the list has been wrapped.

When a menu is entered, the top object is always highlighted. The highlighting of the object indicates to the user the current object that they are on.

- If the Select key is pressed, the current object is selected.
- If the Up or Down arrow keys are pressed, the object above or below the current object is highlighted.
- If Cancel is pressed, the menu exits without saving anything and reverts back to the previous menu that was displayed.

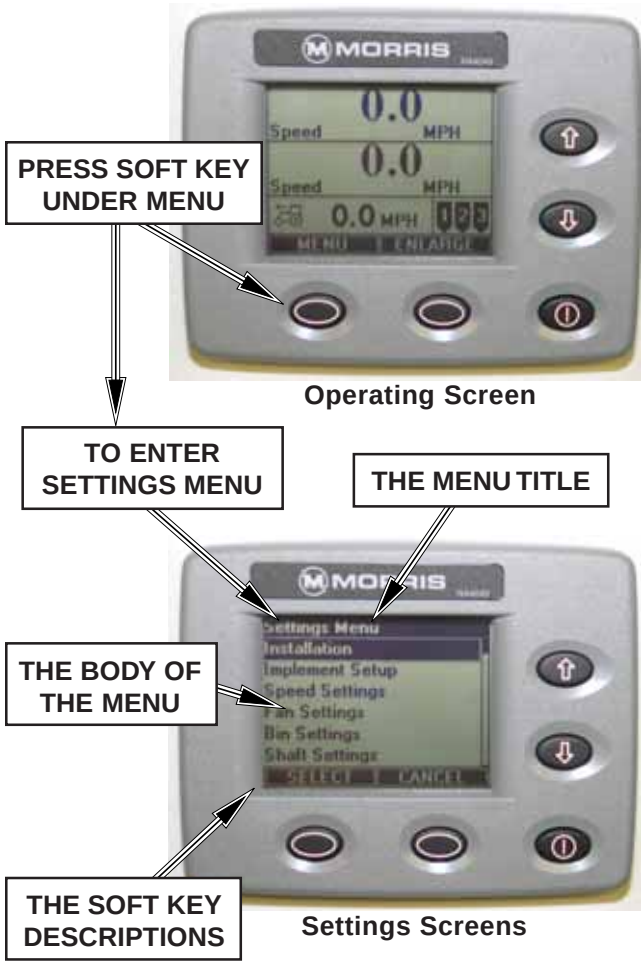

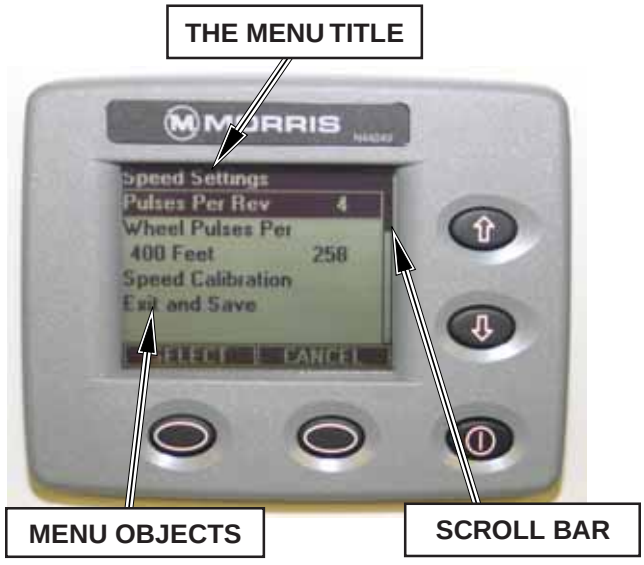

Monitor Settings - Continued

Navigating Settings Screens - Continued

The Body of the Menu - Continued

When an object is selected, the value becomes highlighted.

- Highlighted value can be changed with the Up and Down keys.
- Press “Select” key after changing value to enter value and return to object list.
- Select “Exit and Save” to keep any changes.

There are multiple ways to exit from the menu screens:

1) If the changes that were made on the menu screen need to be saved, the “Exit and Save” menu link must be selected.

2) If the changes are to be discarded or if the current operation is to be terminated (such as a calibration), the “Cancel” key can be pressed, or if it exits, the “Exit” link can be chosen.

The Menu Soft Key Descriptions

Like in the “Operating Screen”, the Menu also has two soft keys. These keys allow the user to select an item or object (the Select key) or to Cancel out of the current operation without saving anything (the Cancel key).





Note: The list shown has been wrapped. The scroll bar indicates that the highlighted Item “Exit” is actually the last item in the list.

Important

The use of “Restore Default Settings” restores ALL of the menu parameters to the factory configuration.
(i.e. Implement width, Pulses Per Rev, Wheel Pulses Per 400 Feet, etc.)

Monitor Settings - Continued

See charts on following pages for monitor settings.

Changing Monitor Settings

The following example explains the procedure for changing settings.

Entering the "Settings Menu"

Example: Change the implement width to 41.5 ft.

1. From the "Operating Screen" press the MENU key to enter the "Settings Menu".

   Use the Up/Down keys to select the desired function. Press the soft key below SELECT to enter the function "Implement Setup".

2. Under each function there is a list of parameters that can be changed, see "Settings Menu" chart.

3. Use the Up/Down keys to select the parameter. "Implement Width".

4. Press the SELECT key to highlight the value. Use the Up/Down keys to change the value to "41.5 Ft".

5. Press the soft key below SELECT to enter the value and move to the next parameter in the list.

   Set all parameters in the list as indicated in the above steps.

6. When all parameters in the list have been set, use the Up/Down keys to highlight "Exit and Save" press the SELECT key to save the changes and return to "Settings Menu".

   Proceed to set all function parameters as indicated in "Settings Menu" chart.

Saved settings are retained even after power has been removed from the monitor.

Note: When the operator is in any of the "Settings Menu" modes, the monitor will not generate normal monitor alarms (i.e. low fan speed, shaft speed and so on).

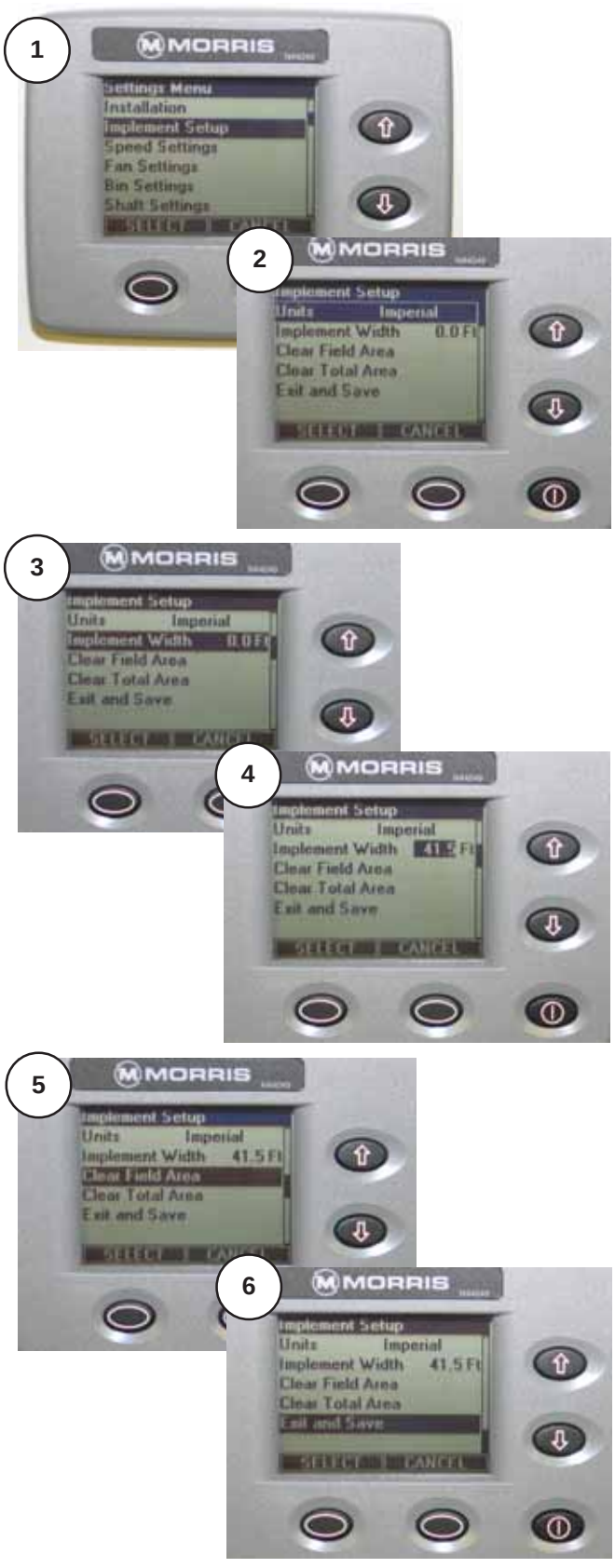

Settings Menu Chart - Standard Drive

Installation

Install New System	See “Sensor Installation”
Replace a Sensor	See “Sensor Replacement”
Add a Sensor	See “Sensor Replacement”
Remove a Sensor	See “Sensor Replacement”

Implement Setup

Units	Select Imperial or Metric
Implement Width	Set to width of seeding tool
Clear Field Area	See “Resetting Area”
Clear Total Area	See “Resetting Area”

Important

Select “Exit and Save” in each Menu Setting to save changes.

Speed Settings

Pulses Per Rev	Set to 4
Wheel Pulses Per 400 Feet	See PP400 Chart
Speed Calibration	See “Pulse Counting Mode for PP 400”

Fan Settings

Pulses Per Rev	Set to 2
Low Alarm Point	Set to 3000 rpm
High Alarm Point	Set to 5000 rpm

Bin Settings

Tank 1, Tank 2, Tank 3 and Tank 4

Alarm Setting	Enabled (default)	Set to Disabled if tank is not in use.

Shaft Settings

Shaft 1, Shaft 2, Shaft 3 and Shaft 4

Settings	Pulses Per Rev	Set to 4
	Low Alarm Point	2.0 rpm - Can be adjusted to 0.5 rpm for low rates.

Blockage Module Settings

Runs per Module Setup	Set individual Module number of Runs
Individual Runs Setup	Allows Runs to be Enabled/Disabled
Blockage Module Test	See “Blockage Module Test”
Blockage Calibration	See “Blockage Calibration”

Global Settings

Language	Select English or Russian	
Volume/Pitch	50% (default)	Set as desired.
Backlight	50% (default)	Set as desired.
Contrast	100% (default)	Set as desired.
Restore Default Settings	Resets ALL Monitor Settings to defaults	

Note: Only setting parameters that are relevant are displayed (i.e. if no Shaft 3 is installed, there will not be any Shaft 3 setting parameters made available).

Monitor Settings - Continued

Wheel Pulses Per 400 Feet (PP400) Standard Drive

The chart contains average PP400 values, for the tire options offered by Morris.

PP400 - Standard Drive				
Tire Size (Good-Year)	**Tire Style**	**Rating**	**Pressure**	**PP400**
23.1 x 26	TD8 Lug	10 ply	28 psi	310
	AWT	12 ply	24 psi	341
30.5 x 32	AWT	12 ply	20 psi	382
			24 psi	380
	Lug	14 ply	20 psi	386
			22 psi	381
800/65 R32	Lug	LI 172	15 psi	382
			20 psi	381
800/65 R32 Dual Wheels	Lug	LI 172	20 psi	381
900/60 R32	Lug	176 A8	17 psi	356
			26 psi	351
520/85 R38 Dual Wheels	Lug	155 A8	20 psi	377

PP400 Math Calculation

To determine PP400 value, first determine the tire circumference as outlined in *"Determining Tire Sprocket"* under Operation Section.

Note: The PP400 can also be determined using the speed calibration feature.

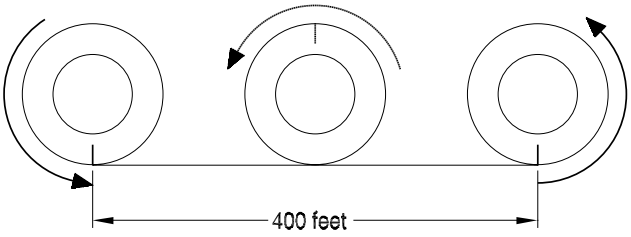



Formula for 26 inch rim . . . . . New Standard Drive - PP400 Value = $\left(\frac{109}{\text{New Tire Circumferenace}}\right)$ x 516

Formula for 32 inch rim . . . . . New Standard Drive - PP400 Value = $\left(\frac{80640}{\text{New Tire Circumferenace}}\right)$

Monitor Settings - Continued

Speed Calibration

If the operator does not know what the pulses per 400 feet should be, or, if more accuracy is desired for present levels of tire inflation or soil conditions, the monitor can be put into "Speed Calibration" mode, pulses will be counted while driving a specified distance.

To start the Pulse Counting Mode:

1. Measure and mark out 400 feet (121.92 m).

   Select "Speed Settings" under the "Settings Menu".

2. Then select "Speed Calibration".

   Use the Up/Down keys to select "Continue Calibration" at which point the monitor will request "Start Driving".

3. Drive the marked distance and the monitor will count the number of pulses.

4. When the distance has been travelled, stop, press the SELECT key to stop the pulse counting. This will "Exit and Save" the new pulse count under the "Speed Settings" menu.

5. The new value will now be displayed under "Wheel Pulses Per 400 Feet" (PP400).

6. Select "Exit and Save" to exit "Speed Settings" and return to the main menu.

Note: The monitor can accept PP400 values from 50 to 9999. Therefore, if the new count is less than 50, the existing count is not replaced. The monitor will state "Pulses Too Low" and display options to "Continue Driving" or "Cancel Calibration".



Alarms

Introduction

All configured sensors and various other operating conditions are continuously monitored. Alarms fall into one of the following three categories:

- **Sensor alarms** are alarms which are generated when information returned by a sensor exceeds the appropriate threshold.
- **Communication alarms** occur when a sensor repeatedly does not respond to attempts at communication.
- **System alarms** are for various other conditions that are found to be in fault.

When an alarm condition occurs the monitor will beep repeatedly and an alarm screen will pop up indicating the fault condition.

The audio alarm and alarm screen persist until the alarm condition is fixed or until it is acknowledged by the operator. Follow the steps on the screen to fix or acknowledge the alarm.

After acknowledgement, the “Operating Screen” will be displayed with any unfixed alarms shown in the “active alarm window”. If there are more than one acknowledged alarms, they will cycle on the display.

When the alarm condition is corrected, the alarm notification is removed and ground speed will again be displayed in bottom window.



Alarm Screen



Alarm - Operating Screen

Nuisance Shaft Alarm

Low application rates of Canola may cause the seed shaft to rotate less than 2 rpm.

The low shaft rpm will cause the monitor to give a shaft alarm, since the shaft is rotating below the defalt alarm threshold of 2 rpm.

To avoid this nuisance alarm change the seed shaft low rpm alarm setting to 0.5 rpm.

Note: Change the setting back to 2 rpm when returning to higher application rates.

Note: To *“TURN OFF”* any shaft not in use set pulses to 0. This will eliminate any nuisance alarms caused by an inactive shaft. Also the corresponding bin should be “Disabled” to eliminate any nuisance alarms caused by an empty bin.

Alarms - Continued

"In Motion" Notification

The "In Motion" condition means that the monitor, based on ground speed and clutch state, considers that the system is supposed to be actively seeding.

The monitor emits a double beep whenever the "In Motion" condition becomes true or false. This condition is defined as *speed greater than 2 mph (3.2 Kph)* and *drive clutch engaged.*

1. If ground speed is less than 2 mph (3.2 Kph) for more than 30 seconds the monitor will alarm and display "Should be Seeding".
2. If ground speed is greater than 2 mph (3.2 Kph) for more than 30 seconds and clutch is not engaged the monitor will alarm and display "Clutch Switch is Off".



Low Fan Alarms

Low fan alarms are handled differently because a stopped fan can result in damage to the metering mechanics as unblown material accumulates. **Low fan alarms can not be acknowledged while the system is "in motion".** Thus, if a low fan alarm occurs during active seeding, the user will **not be able** to silence the alarm with the soft key, but will need to stop the vehicle or disengage the clutch. When this happens, the monitor accepts it as an acknowledgement of the alarm, and an effective "automatic acknowledge" takes place, resulting in the beeper being silenced and the resumption of normal display with "Fan Low RPM" flashing in the alarm window.



Blockage Sensing

Module Installation

When blockage sensing systems are used, modules must be installed in the system, runs per module set, and calibration done while seeding.

Note: When optical modules are added, they must be learned by the monitor. See the "Sensor Installation".

When pin sensors are added, the number of sensors is set in each module on the seeding unit and the number of blockage modules is set in the monitor.

Runs per Module Setup

The number of runs connected per blockage module must be set in order for the system to operate correctly. This should only need to be done when the blockage modules are first installed, and afterwards only if the number of sensors is changed.

Optical Sensors the number of runs connected is set in the monitor. Refer to "Monitor Settings".

Pin Sensors the number of runs connected is set on each individual blockage module on the seeding unit. Refer to "Pin Sensor Installation" Section 10.



Individual Runs Setup

Optical Sensors Only

Runs can be enabled/disabled individually. This feature is useful for turning off runs that are not in use. Refer to "Monitor Settings".



Blockage Sensing - Continued

Blockage Module Test

This test will check the blockage module for proper functioning. Number of runs reported should match the number of sensors connected to each module.

To perform the blockage module test follow the steps below.

1. Stop driving the machine.

   From the “Operating Screen” press the MENU key to enter the “Settings Menu”.

   Use the Up/Down keys to highlight “Blockage Module Settings” press the SELECT key to enter the function.

   Use the Up/Down keys to highlight “Blockage Module Test” press the SELECT key to enter the function.

2. The monitor will indicate when a module test is complete. Testing may take a few minutes depending on configuration and application.

3. Once all modules have completed their test the monitor will display how many optical sensors each module could communicate with. If this number does not match the actual number connected check the wiring and installation of the sensors.

4. Once all of the modules have been tested use the Up/Down keys to highlight “Exit” press the SELECT key to return to the “Blockage Module Settings” menu.

   Use the Up/Down keys to highlight “Exit and Save” press the SELECT key to save the changes and return to the “Settings Menu”.

At any time during this test, CANCEL may be pressed to exit the “Blockage Module Test”.

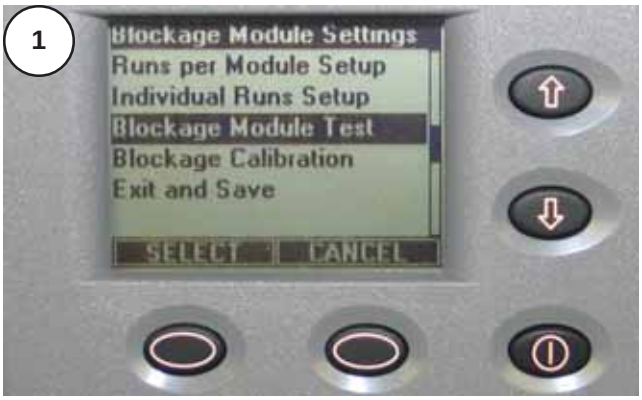







Blockage Sensing - Continued

Blockage Calibration

In calibration mode, the module determines the normal seed flow rate for each run. This calibrated flow rate is used to determine the threshold for indicating that a run is blocked.

To calibrate the blockage modules follow the steps below.

1. Start seeding in the field.

   From the “Operating Screen” press the MENU key to enter the “Settings Menu”.

   Use the Up/Down keys to highlight “Blockage Module Settings” press the SELECT key to enter the function.

   Under “Blockage Module Settings” use the Up/Down keys to highlight “Blockage Calibration” press the SELECT key to enter the function.

2. The monitor will indicate what number of sensors are “Calibrating”, “Calibrated” and “Total” installed sensors. Calibration may take a few minutes depending on the number of sensors and application rate.

3. Once all of the sensors have been calibrated (calibrated = total) press the SELECT key to exit and return to the “Blockage Module Settings”.

4. Use the Up/Down keys to highlight “Exit and Save” press the SELECT key to save the changes and return to the “Settings Menu”.

At any time during this test, CANCEL may be pressed to exit the “Blockage Calibration” leaving the sensors uncalibrated.

Important

***CALIBRATION* must be done each time the seeding rate or the seed type is changed.**

1



2



3



4



Blockage Sensing - Continued

Optical Blockage Run Bad Alarms

If any monitored run does not pass the self-test mode on monitor power-up, the blockage module will report that run is bad. The optical sensor or wiring may be faulty or too much light may be getting into the tube.



Blockage Alarms

During seeding, if the blockage monitor senses a low seed count or does not see any seeds from a run sensor, an alarm will be displayed to show which runs are blocked.

The alarms can be silenced with the OK soft key.



Area Display

There are two area counters, field area and total area. They are both accumulated whenever the system “In Motion” condition is true. Area counts are stored in memory when the unit is turned off.

The area counts can be displayed on the “Operating Screen” as outlined in “Navigating the Operating Screen”. The FIELD AREA and the TOTAL AREA are displayed to the nearest tenth of an acre (or hectare).



Resetting Area

To clear FIELD AREA and/or TOTAL AREA follow the steps below.

- From the “Operating Screen” press the MENU key to enter the “Settings Menu”.
- Use the Up/Down keys to highlight “Implement Setup” press the SELECT key to enter the function.
- Use the Up/Down keys to highlight the desired function of “Clear Field Area” or “Clear Total Area” press the SELECT key to enter the function.
- The monitor will ask “Are you sure?” leave as “Yes”.
- Use the Up/Down keys to highlight “Enter Selection” press the SELECT key to clear area and return to the “Implement Setup” menu.
- Use the Up/Down keys to highlight “Exit and Save” press the SELECT key to save the changes and return to the “Settings Menu”.

Note: Field area will not be reset to zero when total area is reset.





Sensor Replacement

The monitor will alarm the operator if there is a faulty sensor in the system by displaying a communication error for the sensor.

To replace a faulty sensor follow the steps below.

Example: Replace Shaft 1 sensor.

1. From the “Operating Screen” press the MENU key to enter the “Settings Menu”.

   Use the Up/Down keys to highlight “Installation” press the SELECT key to enter the function.

2. Use the Up/Down keys to highlight “Replace a Sensor” press the SELECT key to enter the function.

3. The monitor will highlight “Select Sensor” press the SELECT key to enter the function.

   Use the Up/Down keys to display desired sensor to be replaced (i.e. Shaft 1), press the SELECT key to accept selection.

4. “Proceed” will now be highlighted, press the SELECT key to enter mode.

5. The monitor will then display “Plug in new sensor for: Shaft 1”. Unplug the old sensor and plug in the new sensor.

6. Once the monitor acknowledges the new sensor, it will emit a double beep and acknowledge that the sensor has been replaced.

   “Exit and Save” will be highlighted, press the SELECT key to save the changes and return to the “Installation” menu.

7. Use the Up/Down keys to highlight “Exit” press the SELECT key to return to the “Settings Menu”.

Note: Sensors can also be added or removed from the system in the same manner by slecting the choice from step 2.

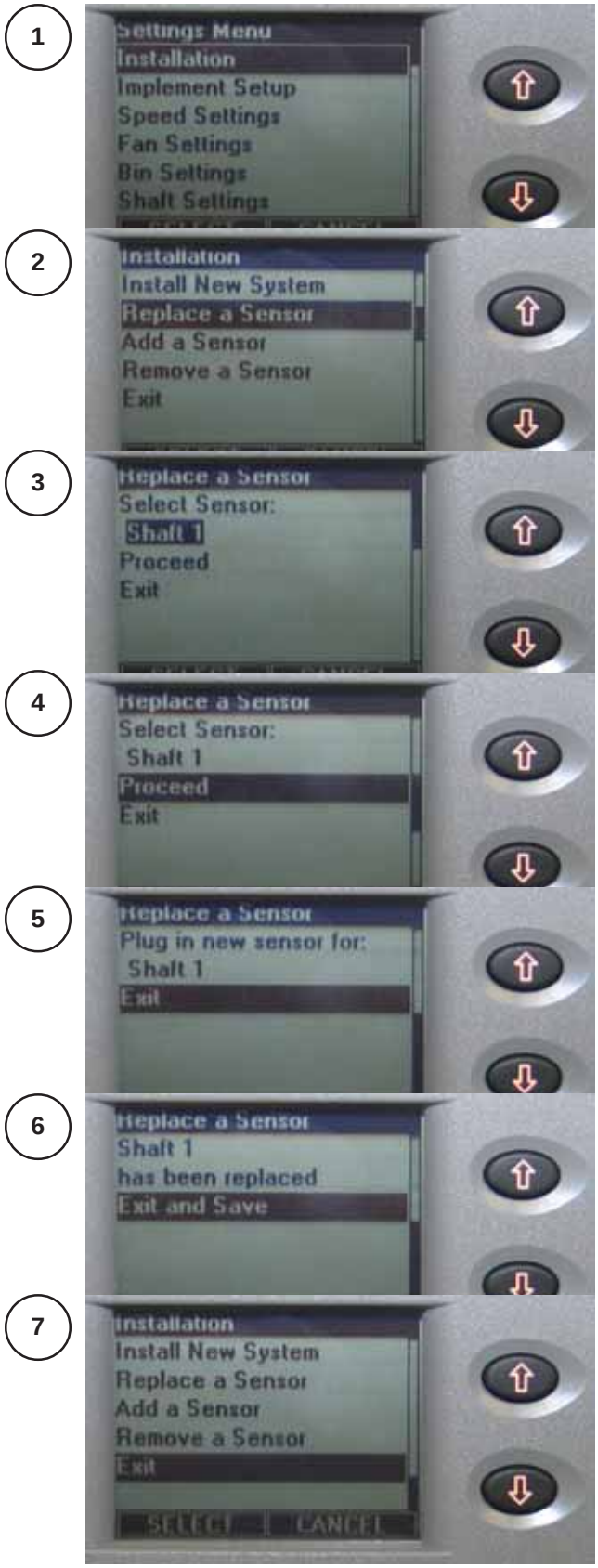

Monitor N37010 - Version 2

Introduction

The monitor utilizes a multiplexed data communication system to monitor the functions of the air cart. In the multiplexed system, all sensors communicate with the monitor on the same three wires.

On power up the monitor will briefly display the version number. (i.e. V2.3)

The system can monitor and display status of the following functions:

- Fan speed
- Ground speed
- Shaft speeds (up to 3)
- Tank levels (up to 3)
- Flow Blockage (up to 192 runs)
- Seed rates & seed counts (up to 24 rows)

An audio alarm will sound upon detection of low or high fan speed, low shaft speed, low tank level. Also, loss of flow in any runs that are being monitored with Blockage Modules, and low seed rates when seed counting sensors are used generate alarms. Audio alarms persist until the alarm condition is removed or until the alarm is acknowledged by the operator by pressing the ACK button.

In addition, the monitor can determine and display:

- Field Area
- Total Area
- Application Rate (weight per unit area)

The monitor allows the following settings to be changed:

- High and Low fan speed alarm point
- Ground speed pulses per mile and pulses per revolution
- Pulses per revolution of fan and 3 shafts
- Low tank alarm for 3 tanks
- The number of Blockage Modules that are connected to the monitor
- Seed rate alarm points for 9 seed types (Plant)
- The width of the implement
- Display imperial or metric units

The settings listed above, as well as field and accumulated areas, and the total number of seeds planted on the current field, are stored in nonvolatile memory. This means that the information is retained even when power is disconnected.

Two cables exit the rear of the monitor. There is a two wire power cable that connects to the tractor power supply. The other is a three wire cable that brings power and communications to the remote sensors.

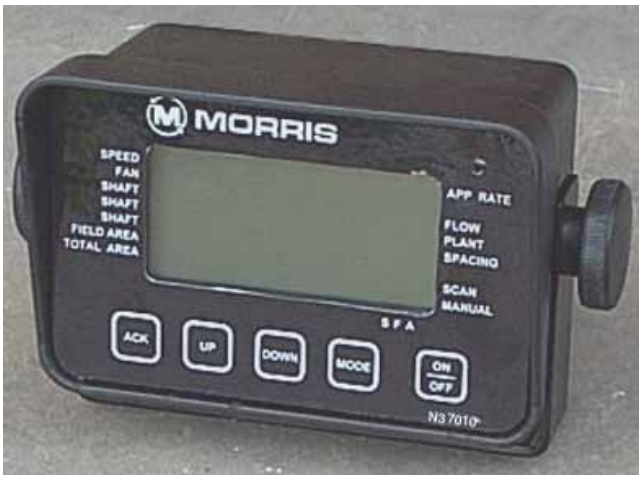

MONITOR



CLUTCH SWITCHES

Identifying Monitor Switches

The five push buttons are used for controlling the monitor.

ACK • Acknowledge. Primarily used for acknowledging alarms. Also used for exiting from program mode, resetting area, and accessing some special functions.

UP • Used for moving function selection icon. Also used to increment parameter in program mode.

DOWN • Used for moving function selection icon. Also used for decrementing parameter in program mode.

MODE • Used to enter program mode. Also used for going to next parameter in program mode.

ON/OFF • Used to turn monitor on and off.

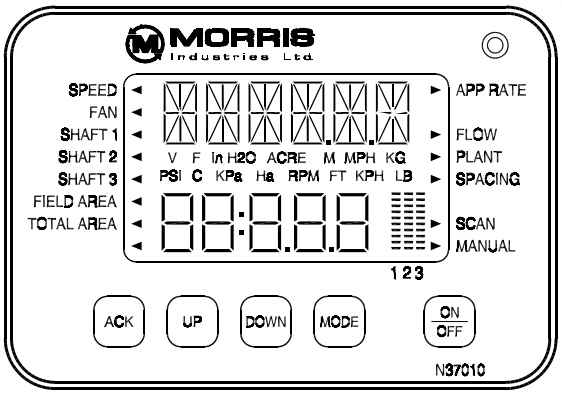

Identifying Monitor Displays

Function Indicators

- The left and right side of the display have triangular icons for indicating the current selected display function.
- These icons will flash when alarm conditions occur for a function.

Upper Display

- Displays the selected function, and alarm conditions.
- This line is also used to give information during monitor programming and initial system installation.

Lower Display

- Displays the reading for the selected function, with the unit of measure displayed above value.
- This line is also used to indicate the parameter value during monitor programming.

Tank Level Indicator

- The bars will flash and the audio alarm will sound when tank level is low.

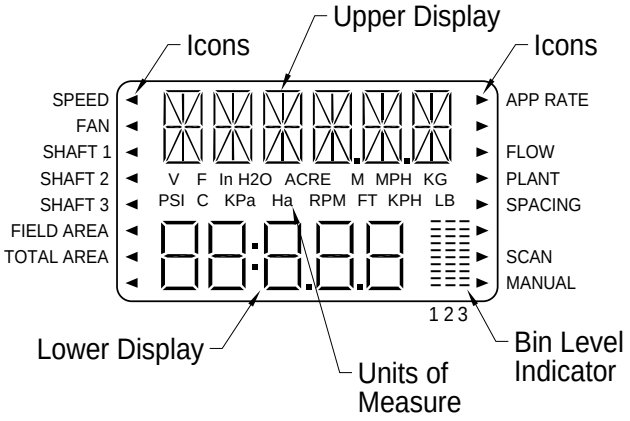

Preparing Monitor

- Locate monitor and clutch switch in a convenient location in cab.
- Connect the red wires to the positive (+) terminal of the battery.
- Connect the black wires to the negative (-) terminal of the battery.
- Route cable harness to seeding tool and air cart. Ensure cables clear any pinch points (i.e. tractor articulation point, hitch point, etc.)
- Program monitor as described in *System Installation* and *Monitor Programming* Sections.

Note: Locate monitor, power and ground wires away from radio and antenna if tractor is so equipped.

Note: Do not connect monitor directly to starter switch.

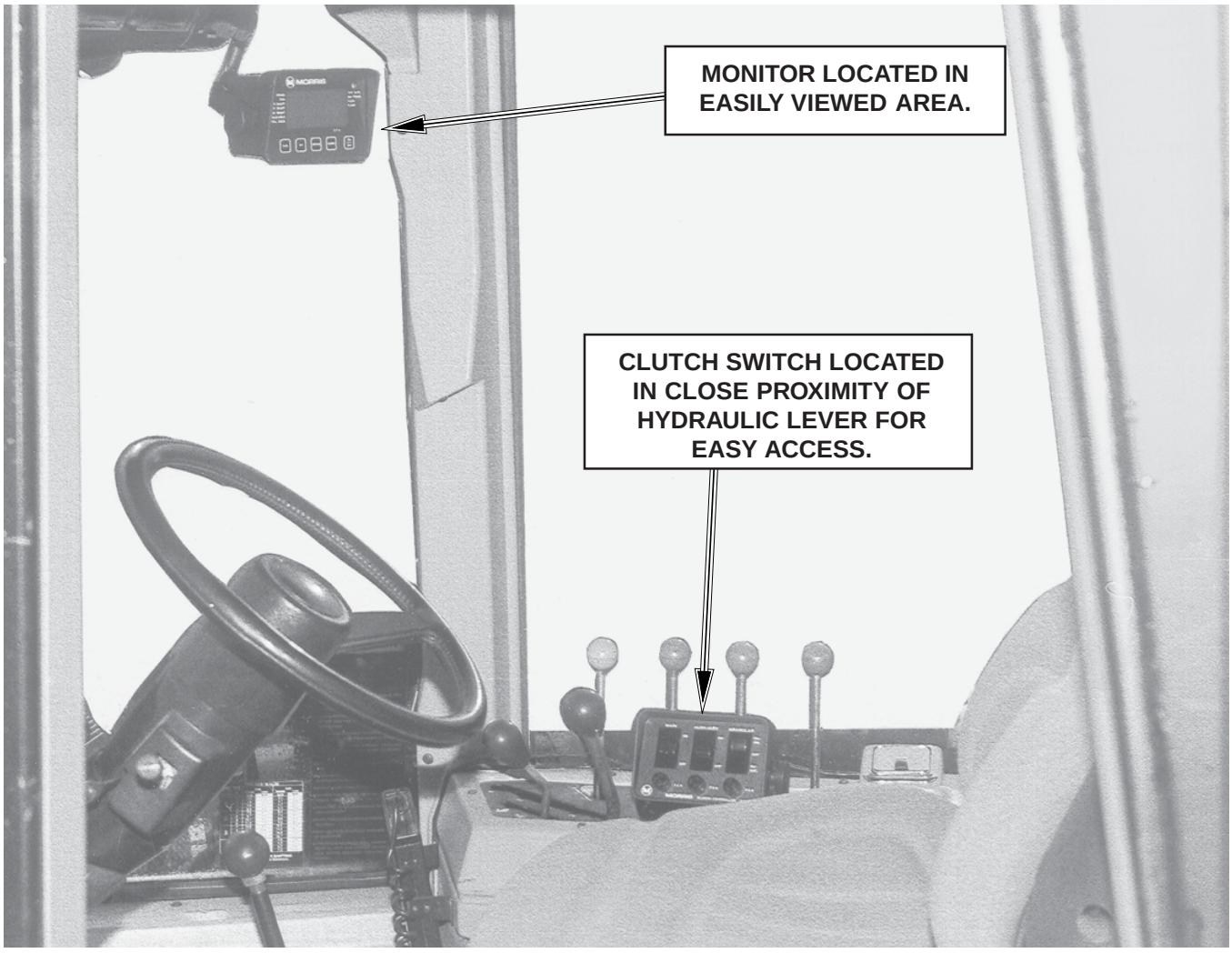

Start-up

Normal Start-up

Normally, when the unit is turned on, the following display sequence takes place:

- All of the display segments turn on one at a time, and then off one at a time.
- MORRIS is briefly displayed.
- The Version/Issue number of the monitor software is displayed. **This number should be included with any reports of faulty or unexpected system operation.**
- The sensor numbers of all previously learned sensors are displayed in sequence as initial communication with each sensor takes place.
- The normal operating display starts with the ground speed function active.
- Once normal operating starts the monitor will alarm specific sensors; in 10 seconds the tanks alarm and in 30 seconds the speed alarm. Press the **ACK** key for each alarm, this will cancel the alarms returning the monitor to ready mode.

It may occur that an error is detected on start-up. In that case the sequence is slightly modified as described in the section on Start-up Error Messages.

Monitor ID
Version Number

Special Start-up

There are two types of special actions that can be controlled when starting up the unit.

- **START SENSOR CONFIGURATION LEARN:** This allows a new sensor configuration to be learned, with the existing configuration cleared from memory.
- **RESET SETTING:** All stored settings, such as pulses per revolution values, alarm points, etc. are restored to their factory default values. All areas and seed counts are also zeroed.

The two actions can be selected independently or together by holding down certain key combinations when the unit is turned on, see chart.

Special Startup	
Button Combination	**What Occurs**
ACK and DOWN	FORCED LEARN of all sensors (other settings retained)
ACK and MODE	RESET SETTINGS (sensor configuration retained)
ACK and DOWN and MODE	BOTH FORCED LEARN and RESET SETTINGS

Start-up - Continued

Start-up Error Messages

In rare circumstances certain fault conditions may be detected at start-up. There are two distinct classes of such fault conditions and they are reported differently.

First Class

The **first class** is due to faults that occur while the unit was operating and which cause the unit to restart. In this case, the monitor will display the error message instead of the normally displayed MORRIS. It will then wait for a key press before proceeding with the start-up sequence. The possible error messages (whose individual meanings are technical and primarily of interest to the monitor supplier) are:

COPRST, UUORST, CLKMON, and **IMPRST**

Second Class

The **second class** includes various conditions that the monitor checks for after the Version Number is displayed. In most cases, when such conditions are detected the system is forced to do a complete factory reset (as if the monitor were turned on with the ACK, Down and Mode keys all held as described above). The possible displayed messages are:

VERCHG, SNSCHG, EEPCS1, EEPCS2, BDSERP, and **VERCHS**

Note: If any of the error messages appear more than twice, the monitor is probably faulty.

Startup Error Codes

Monitor Display	Display Meaning
VERCHG	Should only be true after installation of new software that changes the way nonvolatile memory (on chip EEPROM) is used. Forces a factory reset.
SNSCHG	Should only be true after installation of new software that changes the order or composition of the default list of connectable sensors. Forces a factory reset.
EEPCS1 EEPCS2	Some data in the microprocessor nonvolatile memory (EEPROM) is invalid. Data is stored in two banks. The message indicates which bank had the problem. If only the first bank is corrupt, then the good bank 2 copy will be used and there will not be a forced factory reset.
BDSERP	A test of the integrity of the additional nonvolatile memory chip (Serial EEPROM) has failed.
VERCHS	Should only be true after installation of new software that changes the way nonvolatile memory (Serial EEPROM) is used. Forces a factory reset.

System Installation

Sensor LEARN Mode

The installation procedure is required to configure the monitor to the sensors attached to it.

The operator may have to redo the installation if:

1) A granular applicator is added to the air cart.
2) Replacing faulty sensors.
3) Replacing faulty monitor with a new monitor.

Note: Each monitor is unique to the sensors installed. If monitor is moved to another air cart it has to be reprogrammed to match the sensors.

Installation Precautions

1) During installation the monitor has a predetermined order in which it wants the sensors attached. The installer must be sure that the proper function is plugged in.
   i.e. If during installation the installer plugs in the Front Shaft and Ground Speed sensors in the wrong order, the monitor would not know this. The monitor would interpret Front Shaft rpm from the Ground Speed shaft and vice versa.
2) There may be occasions when the operator will not have a full complement of sensors. These sensors can be programmed to be ignored in two ways:
   i) During initial installation when the monitor prompts for a sensor to be plugged in, the operator can press **ACK** to skip over the sensor. **The sensor will be assigned a disabled status.** A sensor disabled by this method can only be enabled by repeating the installation procedure.
   ii) During operation the operator can disable sensors by setting the pulses per revolution to zero. When pulses are set to zero alarms for that sensor and corresponding Tank Level sensor are ignored and no monitoring occurs.
3) Blockage modules attached to the harness are handled differently than the sensors attached to the harness. See Assembly Section *"Blockage Module".*
   i) **Pin Sensors** - the blockage module **does not have to be removed from the harness** during initial system installation.
   ii) **Optical Sensors** - the blockage module **must be removed from the harness** during initial system installation.

Sensor Installation Order
Speed (Ground)
Fan
Shaft 1
Shaft 2
Shaft 3
Tank 1
Tank 2
Tank 3
VarCon (Variable Rate) (Unit calls for installation only if var controller is installed)
Plant Sensors
Optical Blockage Modules

System Installation - Continued

Installation Procedure

- **Disconnect** all the sensors (3 pin connector) from the harness before turning monitor on.
- Hold down both buttons **ACK-DOWN** and turn on monitor. Continue holding the buttons until **KEYOFF** appears on the display.
- **RELOAD** will be displayed briefly on line 1 when the ACK-DOWN buttons are released. Each sensor must now be individually recognized by the monitor. The monitor will display the order in which the sensors must be plugged in.
- The display on line 1 will alternate between **MISSED** and **SPEED**, indicating that the ground speed sensor may now be connected.
- The monitor will give a double beep when it acknowledges the sensor.
- The display on line 1 will now alternate between **MISSED** and **FAN**, indicating that the fan sensor may now be connected. Connect the fan sensor.
- The process is the same for the rest of the sensors in the sequence.
- When the monitor requests a sensor that **will not be used** in the configuration, press the **ACK** key, and the monitor will skip the sensor and advance to the next one in the sequence.

Note: There are **"24" PLANT SENSORS**. To skip past the plant sensors press **ACK** and **MODE** buttons together. Same procedure can be used for the Optical Flow and Blockage Modules if not used.

- To complete the installation, the monitor **must be turned off**, then turned on again. Now, only the names of the learned (but not the skipped) sensors will quickly flash by on the display as the unit goes through its normal "wake up" sequence, after which it advances to its default operating mode, where the ground speed is displayed.

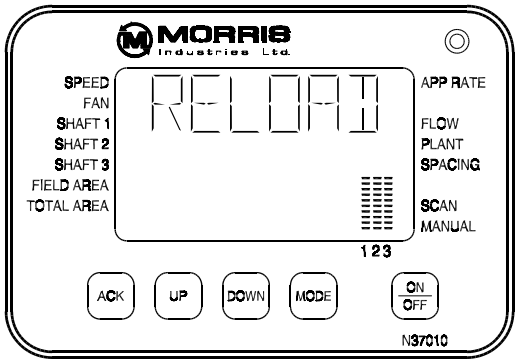

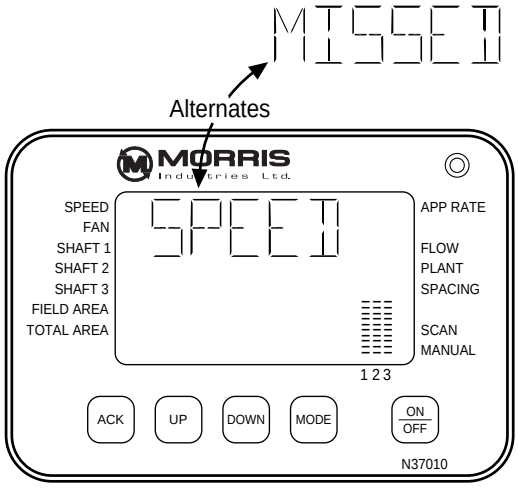

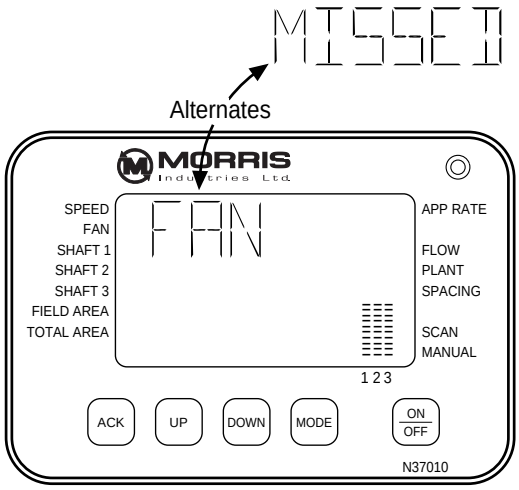

Monitor Programming

Most of the function positions have settings that may be changed. These include various configuration details, alarm trip points, and some convenient options such as whether imperial or metric units should be used for numeric display.

Procedure

The following explains the procedure for entering and exiting any of the Change Settings modes.

Saved settings are retained even after power has been removed from the monitor.

Entering Change Settings Mode

- Use the UP or DOWN button to move the triangle icon to desired function.
- Hold the MODE button until 4 short beeps and 1 long beep sounds. Release button after the long beep. This starts the change settings mode.
- Display line 1 will show a description of what the setting is.
- Display line 2 will indicate the present numeric value of the setting. An appropriate unit is also indicated.
- Now, each press of the MODE button will advance the display to the next settable item for that function, cycling back to the first one after reaching the end. The last display in the cycle is the save prompt, which allows the user to decide whether settings should be saved into memory.

Exiting from Change Settings Mode

- Press MODE button until the **SAVE** display appears on display line 1.
- If settings should be saved, press UP to choose yes (Y). Then hold down ACK button until 4 short beeps and 1 long beep sounds. Release button after the long beep.
- If settings should not be saved (but remain as they were before the mode started) press DOWN to choose no (N). Then press ACK button, which immediately exits Change Settings Mode.

Note: When the operator is in any of the *"change settings"* modes, the monitor will not generate normal monitor alarms (low fan speed, shaft speed and so on).

See charts on following pages for monitor program settings.

PP400				
Tire Size (Good-Year)	**Tire Style**	**Rating**	**Pressure**	**PP400**
23.1 x 26	TD8 Lug	10 ply	28 psi	310
	AWT	12 ply	24 psi	341
30.5 x 32	AWT	12 ply	20 psi	382
			24 psi	380
	Lug	14 ply	20 psi	386
			22 psi	381
800/65 R32	Lug	LI 172	15 psi	382
			20 psi	381
900/60 R32	Lug	176 A8	17 psi	356

Important

PP400 is affected by tire circumference. Determine tire circumference under actual field conditions. See "PP400 Calculation"

Note: To *"TURN OFF"* any shaft not in use set pulses to 0. This will eliminate any nuisance alarms caused by an inactive shaft.

Base Monitor Programing												
MONITOR FUNCTION	PRESS BUTTON	Display Upper	Display Lower	PRESS BUTTON	Display Upper	Display Lower	PRESS BUTTON	Display Upper	Display Lower	PRESS BUTTON	Display Upper	PRESS BUTTON
	Hold for five beeps (4 short and 1 long beep)		Set with UP/DOWN buttons			Set with UP/DOWN buttons			Set with UP/DOWN buttons		Set with UP/DOWN buttons	Hold for five beeps (4 short and 1 long beep)
SPEED	MODE	PP400	* See Chart PP400	MODE	PPR	4	MODE				SAVE Y	ACK
FAN	MODE	PULSES	2	MODE	LO FAN	3000	MODE	HI FAN	5000	MODE	SAVE Y	ACK
SHAFT 1	MODE	PULSES	4	MODE	LEVEL	20	MODE				SAVE Y	ACK
SHAFT 2	MODE	PULSES	4	MODE	LEVEL	20	MODE				SAVE Y	ACK
SHAFT 3	MODE	PULSES	4	MODE	LEVEL	20	MODE				SAVE Y	ACK
FIELD AREA or TOTAL AREA	MODE	WIDTH	Seed Tool Width	MODE	UNITS	0-Imperial or 1-Metric	MODE				SAVE Y	ACK
FLOW	MODE	BOXES	0	MODE	TYPE	0	MODE				SAVE Y	ACK
PLANT	MODE	SDTYPE	1	MODE	SEEDRT	15000	MODE	RSPACE	7.5	MODE	SAVE Y	ACK
SPACE	MODE	SELECT	0	MODE							SAVE Y	ACK

Canola Setting

Low application rates of Canola may cause the seed shaft to rotate less than 2 rpm.

The low shaft rpm will cause the monitor to give a false seed shaft alarm, since the shaft is rotating below the alarm threshold of 2 rpm.

To avoid this nuisance alarm change the seed shaft pulse setting from 4 to 1, the monitor will think the shaft rpm is 4 times what it actually is.

Example: Actual Seed Shaft rpm is 5.

Monitor set at **4 pulses** will read a seed shaft rpm of **5**.

Monitor set at **1 pulses** will read a seed shaft rpm of **20**.

Note: Change the pulse setting back to 4 when returning to higher application rates.

Monitor Programming - Continued

When an air cart is equipped with blockage modules, or plant counter the settings listed in the Monitor Options Programming chart must be used.

Note: To *"TURN OFF"* any shaft not in use set pulses to 0. This will eliminate any nuisance alarms caused by an inactive shaft.

Monitor Options Programing

MONITOR FUNCTION	PRESS BUTTON	Display Upper	Display Lower	PRESS BUTTON	Display Upper	Display Lower	PRESS BUTTON	Display Upper	Display Lower	PRESS BUTTON	Display Upper	PRESS BUTTON
	Hold for five beeps (4 short and 1 long beep)		Set with UP / DOWN buttons			Set with UP / DOWN buttons			Set with UP / DOWN buttons		Set with UP / DOWN buttons	Hold for five beeps (4 short and 1 long beep)
SHAFT 3	MODE	PULSES	4	MODE	LEVEL	20	MODE				SAVE Y	ACK
FLOW Pin	MODE	BOXES	Number of Blockage modes used	MODE	TYPE	0	MODE				SAVE Y	ACK
FLOW Optical	MODE	INSTAL	Y	MODE	M01R--	Set number of runs for module	MODE (Will run through all blockage Modules)	M02R-- to M12R--	Set number of runs for module	MODE	SAVE Y	ACK
PLANT	MODE	SDTYPE	1 - 9	MODE	SEEDRT	15000 - 35000	MODE	RSPACE	0.1 - 99.9	MODE	SAVE Y	ACK
SPACE	MODE	SELECT	0 - seeds/foot or seeds/meter 1- inches/seed or cm/seed							MODE	SAVE Y	ACK

Monitor Programming - Continued

PP400 Calculation

To determine PP400 value, first determine the tire circumference as outlined in *"Determining Tire Circumference"* under Operation Section.

Note: The PP400 can also be calculated more accurately with the use of the monitor pulse counting mode.

Formula for 26 inch rim . . . . . New Standard Drive - PP400 Value = $\left(\frac{109}{\text{New Tire Circumferenace}}\right)$ x 516

Formula for 32 inch rim . . . . . New Standard Drive - PP400 Value = $\left(\frac{80640}{\text{New Tire Circumferenace}}\right)$

PP400 Pulse Counting Mode

PP400 value can also be determined with the monitor, by placing it into Pulse Counting mode, in which the number of pulses associated with 400 feet of driving are determined.

To start the Pulse Counting Mode:

- Measure and mark out 400 feet (121.92 m).
- Select the SPEED position.
- Hold down the ACK key until after the long beep.
- Display line 1 will show START.
- To start the monitor counting the pulses, the MODE key must be pressed.
- Display line 1 will show COUNT and the bottom line will show "0".
- Drive distance and the monitor will count the number of pulses.
- When the 400 feet has been driven, the operator can press the MODE key once again to stop the pulse counting. This will bring up the SAVE screen.
- To save the count, select Y and then press and hold down ACK button until 4 short beeps and 1 long beep sounds. Release button after the long beep.

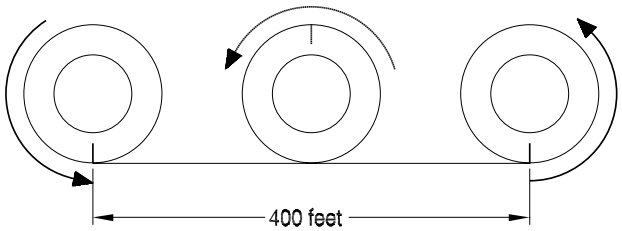

Note: The monitor can accept PP400 values from 50 to 1000. Therefore, if the new count is less than 50, the existing count is not replaced.

Normal Operation

The text on either side of the display shows the names of all display functions on the monitor. A particular installation, however, might not use them all (such as installations without the third shaft/tank, or which do not have the FLOW option).

The operator controls which function will be active using the UP and DOWN buttons. The triangular indicator will indicate which function is active. A name will also appear on Line 1.

The numeric value for the selected function is displayed on line 2 unless that function is disabled, in which case line 2 will display OFF.

The unit of measurement for the displayed number is indicated in the units area of the display.

Following is a summary of what is displayed on line 2 for each function. Some functions are discussed later in more detail.

Note: Monitor will not function if the system installation (Sensor Learn Mode) was not completed. *See Sensor Installation.*

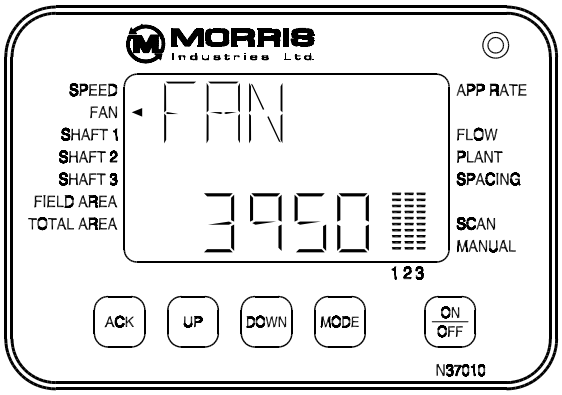

MONITOR FUNCTION	LINE 1 TEXT	WHAT APPEARS ON LINE 2
SPEED	SPEED	Ground speed in MPH or KPH
FAN	FAN	Fan speed in RPM
SHAFT 1	SHAFT 1	Shaft speed of the named metering shaft in RPM
SHAFT 2	SHAFT 2	
SHAFT 3	SHAFT 3	
FIELD AREA	F AREA	Area covered while seeding, in ACRES or HECTARES, since the last time the counter was zeroed. The FIELD counter can be cleared alone; clearing TOTAL clears FIELD also.
TOTAL AREA	T AREA	
APP RATE	APRATE	Determined application rate in pounds/acre or kg/hectare. Shows 0 after powerup until the procedure is done. More detail found in section on Application Rate.
FLOW	FLOW	OPEN if all runs are clear, or cycles through display of all blocked runs with format "MmmRrr", where mm=module address, rr=run number. More detail found in Flow section.
PLANT	AVG	Seed Rates or Seed Counts. In either case, for a single run, averaged over all runs, or for the run with the minimum or maximum rate or count. Operator chooses what is shown. More detail found in section on the planter option.
	RAT	
	MIN, MAX	
SPACE	AVG	Number of seeds planter per distance unit or distance between speeds planted for a single run, averaged over all the runs or for the run with the minimum or the maximum rate.
	S/M (IN/S)	
	MIN, MAX	

Alarms

Introduction

All configured sensors and various other operating conditions are continuously monitored. Alarms fall into one of the following three categories:

- **Sensor alarms** are alarms which are generated when information returned by a sensor exceeds the appropriate threshold.
- **Communication alarms** occur when a sensor repeatedly does not respond to attempts at communication.
- **System alarms** are for various other conditions that are found to be in fault.

When an alarm condition occurs the monitor will beep repeatedly, the indicator icon for the function will flash, and line 1 will indicate the fault condition.

The alarms persist until the alarm condition is removed or until the alarm is acknowledged by the operator. To acknowledge the alarm the ACK button must be pressed, which (if there are no other alarms pending) results in the silencing of the beeper and the return of the normal display. An exception to this is with low fan alarm, as explained later. After acknowledgement, the indicator icon (or the upper portion of the bar graph in the case of tank level alarms) will continue to flash for as long as the alarm condition is present.

Note: If the monitor is in the *"change settings"* mode, no alarms will be generated.

When the alarm condition is corrected, the alarm indicators are removed resuming normal operation.

If more than one alarm condition occurs at the same time, pushing the ACK button will acknowledge each alarm in order of priority. Line 1 will indicate the highest priority alarm that has yet to be acknowledged.

The order of alarm priority is: High Fan RPM, Low Fan RPM, Seed Shaft RPM, Fertilizer Shaft RPM, Auxiliary Shaft RPM, Grain Flow, Seed Bin Low, Fertilizer Bin Low, and Auxiliary Bin Low.

When multiple alarms have been acknowledged, the function indicators for the alarmed functions will continue to flash.

Note: To *"TURN OFF"* any shaft not in use set pulses to 0. This will eliminate any nuisance alarms caused by an inactive shaft.

Alarms - Continued

Sensor Alarm Chart

The following chart shows alarms which are generated when alarm thresholds are exceeded. Alarm points for some sensors are fixed, while others can be changed by the user.

Sensor Alarm Priority		
Monitor Display	**Display Meaning**	**Alarm Point**
FAN	Fan Speed Too Low or Fan Speed Too High	May be changed by Operator
SHAFT 1	Shaft 1 Rotation Too Slow	Fixed 2 RPM or less
SHAFT 2	Shaft 2 Rotation Too Slow	
SHAFT 3	Shaft 3 Rotation Too Slow	
FLOW	Loss of Seed Flow (Blockage Module Option)	Set by calibration process
TANK 1	TANK 1 Low Level	Fixed
TANK 2	TANK 2 Low Level	
TANK 3	TANK 3 Low Level	
SPEED	Ground Speed below 2 mph	Fixed
CLUTCH	Clutch not engaged	
	Low Seed Rate (Seed Counting Option)	Adjustable alarm point
	Auxiliary Bin Pressure	Fixed

When an alarm condition arises, the beeper will sound, the appropriate triangular indicator will flash, and Line 1 will indicate the fault condition.

To prevent nuisance alarms during setup, while the unit is in any of the special modes, none of the ordinary sensor type alarms will be generated. The special modes include Change Settings mode, Application Rate mode, Pulses Per Mile Count mode, Flow Test and Calibration modes and so on (basically, any mode of operation that is initiated by holding down a button for 5 beeps).

Tank Level Alarms

Tank level alarms use the bar graphs and so are an exception to the above. There is still a Line 1 message and beeping, but instead of a triangular indicator the bar itself indicates the alarm. The lower portion of the bar remains solid, while the upper portion will flash.

Alarms - Continued

Sensor Alarms - Continued

Low Fan Alarms

Low fan alarms are treated specially because a stopped fan can result in damage to the metering mechanics as unblown material accumulates. **Low fan alarms can not be acknowledged with the ACK button while the system is "in motion".** If a low fan alarm occurs while the system is not in motion, the normal rules apply, and the user will be able to silence the alarm with the ACK key. The "in motion" condition means that the monitor, based on ground speed and clutch state, considers that the system is supposed to be actively seeding. Thus, if a low fan alarm occurs during active seeding, the user will **not be able** to silence the alarm with the ACK key, but will need to stop the vehicle or disengage the clutch. When this happens, the monitor accepts it as an acknowledgement of the alarm, and an effective "automatic acknowledge" takes place, resulting in the beeper being silenced and the resumption of normal display.

Ground Drive "In Motion" Alarm

The monitor emits a double beep whenever the "In Motion" condition becomes true or false. This condition is defined as *speed greater than 2 mph* (3.2 kph) and *drive clutch engaged.*

If ground speed is less than 2 mph (3.2 kph) for more than 30 seconds the monitor will alarm and display SPEED on line 1.

If ground speed is greater than 2 mph (3.2 kph) for more than 30 seconds and clutch is not engaged the monitor will alarm and display CLUTCH on line 1.

Note: There is no visual display associated with this feature. It is only intended to inform the operator that the clutch is operating properly.

Alarms - Continued

Sensor Alarms - Continued

Flow (Blockage Module) Alarms

Regular Blockage Module Alarms - Pin Sensors

If a flow blockage occurs, a fault message 'FLOW' appears on line 1. (See Diagram 1) The operator must select the FLOW function to see the error.

There are two types of flow alarms. There can be seed flow alarms or communication error alarms.

The format for the seed flow alarms is 'MxxRyy'. (See Diagram 2) The 'M' indicates module and the 'xx' represents the blockage module number. The 'R' indicates run and the 'yy' is the seed run that has a blockage.

The format for the communication error alarms is **BLK ERR** will be displayed on line 1. (Diagram 3) The module number where the communication failure has occurred will be displayed on line 2. (Diagram 3) This fault is probably caused by an improper connection of the 3-wire system, or is a result of one or more modules having an incorrect address switch setting.

If communication errors are occurring and no blockage modules are connected, the monitor must be programmed to disable the flow monitoring function. This is done by setting the Blockage Module complement equal to zero.

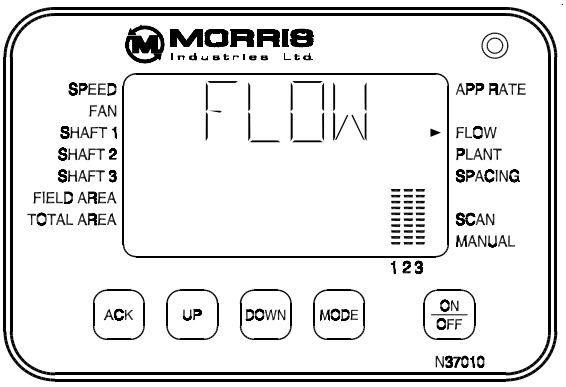

Diagram 1

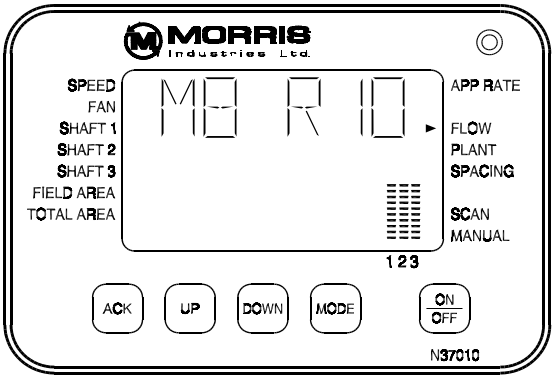

Diagram 2

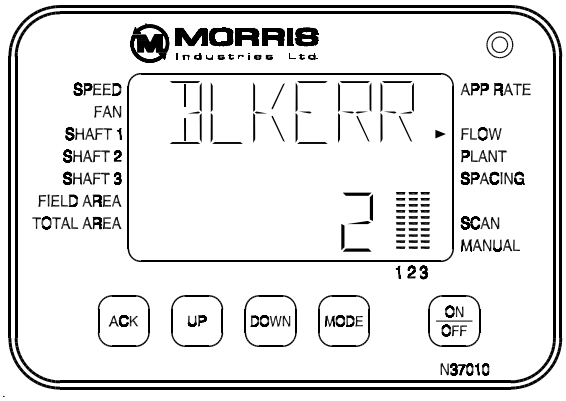

Diagram 3

Alarms - Continued

Sensor Alarms - Continued

Optical Blockage Module Alarms

If a run does not pass the self-test mode upon powering up, the blockage module will report that run is bad. Sometimes this will happen if there is too much light shining in the seed tube where the sensor is positioned. This alarm by itself does not mean that the sensor is not working correctly.

During planting, if the blockage monitor does not see any seeds from a run sensor, it will report to the monitor that the run is blocked.

If a run is reported to be bad and blocked at the same time, the monitor will alert the user by saying "*BLOCK". If the run is in this condition and the run is not blocked, and there are seeds flowing in that tube, that means the sensor is not working. It should then be replaced.

The alarms can be silenced with the ACK key.

Optical Blockage Alarms

Blockage module alarm		**Meaning**
Line 1	Line 2	
BAD	Run number (*)	Run failed self-test. May be due to too much light getting in the tube.
BLOCK	Run number (*)	The sensor has stopped seeing seeds. Clean out the blockage.
*BLOCK	Run number (*)	The sensor failed self-test and has stopped seeing seeds. If there is no blockage in the tube, the sensor may have stopped working properly.

(*) the numbering of the runs begins with module 1 and continues on through the last module.

Alarms - Continued

Sensor Alarms - Continued

Communication Alarms

Communication Alarms occur when a sensor does not respond to repeated attempts at communication by the monitor.

- The monitor display will alternate between COMERR and SENSOR NAME on line 1.
- The monitor will display the SENSOR ID NUMBER on line 2.

After acknowledgement, the operator is reminded of which sensor is in fault by the blinking of the associated triangular indicator (or in the case of tank level sensors, the associated bar graph).

The display is slightly different when the communication fault is with a Blockage Module, as described under Flow (Blockage Module) Alarms.

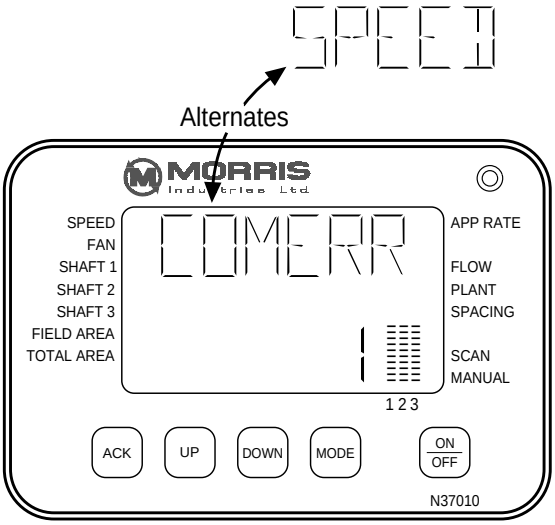

Note: If no blockage modules are connected, the number of modules "BOXES" should be set to zero. This will prevent nuisance communication alarms.

System Error Alarms

System errors are displayed with "SYSERR" on line 1, and an error code on line 2. The conditions that are monitored, along with their corresponding error codes are listed in the table.

Line shorts must be located and fixed before normal operation will resume.

System Error Codes	
Monitor Display	**Display Meaning**
100	Data Line is Shorted Low (Usually a short to ground)
101	Data Line is Shorted High (Usually a short to +12V)
102	Transmitted Byte Not Also Recieved

Area Display

There are two area counters, field area and total area. They are both accumulated whenever the system “in motion” condition is true, with one exception; when the system is in Application Rate mode, these area counters are not active. Area counts are stored in memory when the unit is turned off.

The counts are displayed by moving the triangle icon with the UP or DOWN button to the desired function. The FIELD AREA is displayed to the nearest tenth of an acre (or hectare) and the TOTAL AREA is displayed with no decimal. The appropriate unit icon (acres or hectares) is turned on.

Resetting the Field Acre Meter

- Use the UP or DOWN button to move the triangle icon to FIELD AREA.
- Hold the ACK button until 4 short beeps and 1 long beep sounds. Release button after the long beep.
- The field area will be reset to zero.

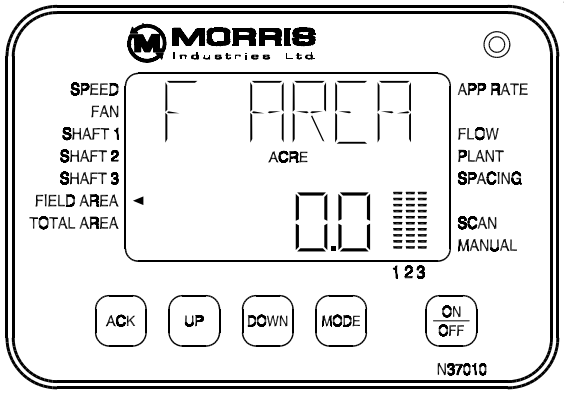

Resetting the Total Acre Meter

- Use the UP or DOWN button to move the triangle icon to TOTAL AREA.
- Hold the ACK button until 4 short beeps and 1 long beep sounds. Release button after the long beep.
- The total area will be reset to zero.

Note: Field area will also be reset to zero when total area is reset.

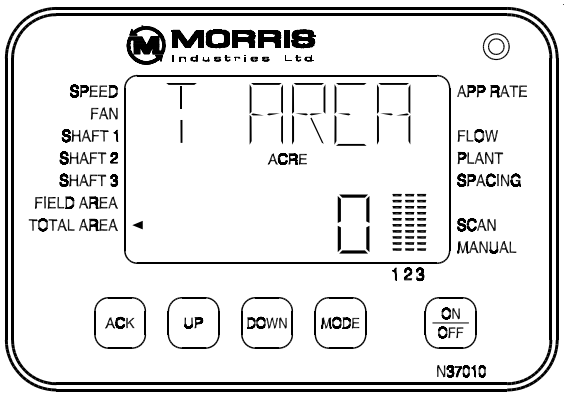

Application Rate Check

The application rate function allows the operator a simple method for performing application rate calculations. When in application rate mode, the operator must move the air cart over a distance, where the seeded material must be collected. The material is weighed. The weight is entered into the monitor and the monitor calculates the application rate.

- Remove the wing nuts on the collector bottom.
- Remove the bottom of the collector.
- Remove the metering chain from the transmission that is **not** being checked.
- Check that the desired rate change sprocket is installed in the transmission.
- Turn the crank until material begins to fall through the collector body.
- Slide rate check box on the collector body.
- Use the UP or DOWN button to move the triangle icon to **APP RAT** (See Diagram 1). Line 2 will display the last application rate calculated. ***This is just the last calculation, it may not be the current application rate.***
- Hold the mode button until 4 short beeps and 1 long beep sounds. Release button after the long beep.
- The word **AREA** will be displayed on line 1. (See Diagram 2)
- The actual area will be displayed on line 2. The display will show 0.00 on line 2 when the mode is first entered.

Note: Because this is a special mode, the normal Field and Total acre counters are not incremented at this time.

- Engage the electric clutch. ***Ensure the fan is not running.***
- Drive the tractor forward until the display reads at least 1/10 acre (0.1) on line 2. (See Diagram 3)

Note: Less than 1/10 acre maybe required to ensure higher application rate does not over fill sample collector. If sample plugs collector bottom, damage to metering wheels may occur. Plus the sample collected will be inaccurate.

- Disengage the electric clutch and stop the tractor.
- Remove sample collector.

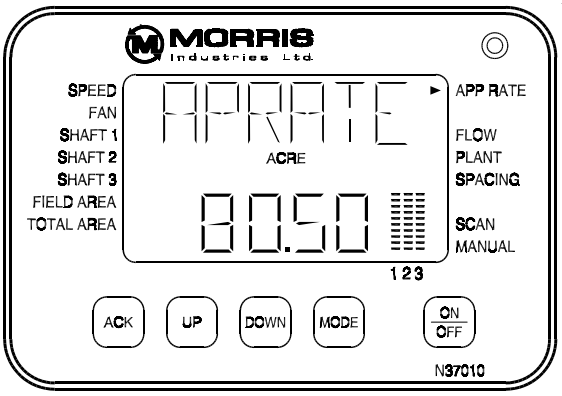

Diagram 1

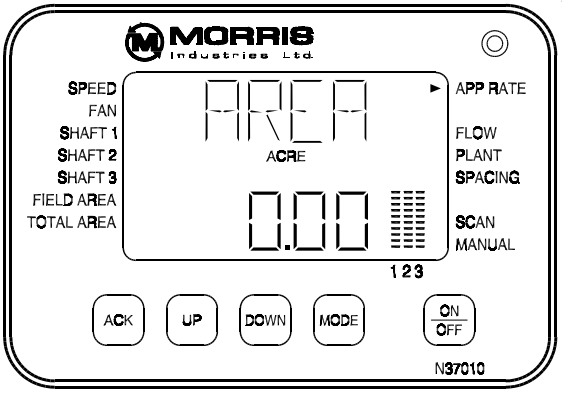

Diagram 2

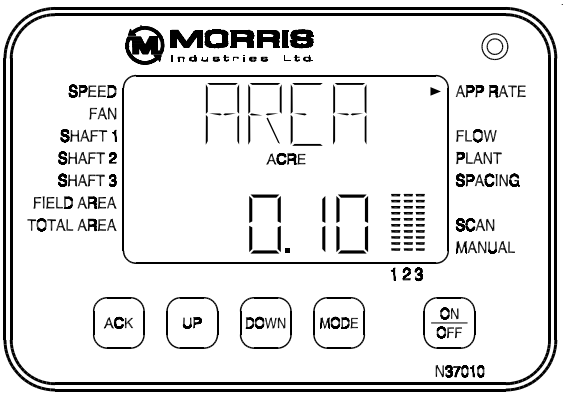

Diagram 3

Application Rate Check - Continued

- Weigh the sample by using tarp straps to hook rate check box to spring scale.

Note: Remember to subtract the weight of the rate check box from the total sample weight.

- Press the mode button.
- The word **WEIGHT** will be displayed on line 1. (See Diagram 4)
- Enter the weight of the collected material on line 2 using the UP or DOWN buttons.
- Press the mode button.
- The word **RATE** will be displayed on line 1. (See Diagram 5)
- The calculated application rate will be displayed on line 2.
- Check this rate against rate required. If a different rate is required then increase or decrease the size of the rate change sprocket. Increasing the sprocket size will increase the rate and vice versa.
- To exit the application rate mode, press the ACK button until 4 short beeps and 1 long beep sounds.
- Replace the bottom of the collector.
- Follow the above procedure to check the rate of the other tank.

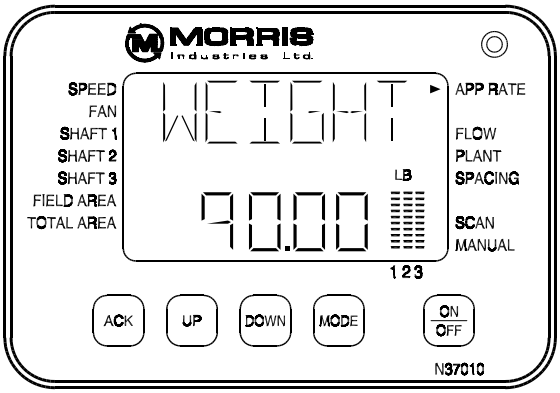

Diagram 4

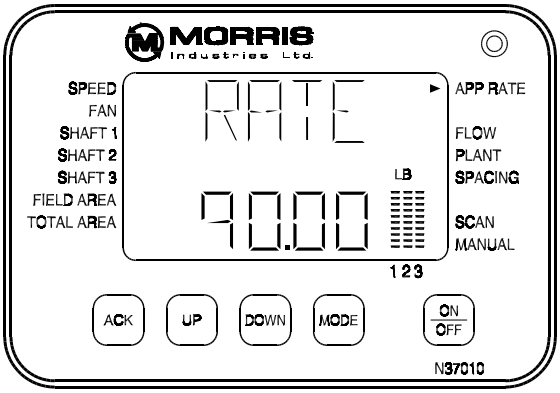

Diagram 5

Note: When in application rate mode, the field and total acres are not altered.

Flow - Pin Sensors

Introduction

There are three modes of operation for the grain flow monitoring system. These are Operate, Test, and Calibrate. Normally, the system is in Operate mode, in which all modules are being monitored for blockage, and blockages cause monitor alarms. Test and Calibrate are special modes which are performed after the first installation and also when the configuration, the normal seed rate, or the type of seed being used changes. The following sections describe each mode in the order that they would be used in a new installation.

Setting Flow Parameters

The number of blockage modules connected must be set at the monitor console in order for the system to operate correctly. This should only need to be done when the blockage modules are first installed, and afterwards only if the number of blockage modules is changed. Refer to monitor programming.

Test Mode

This mode of operation is used to verify a correct installation. It allows the user to see whether all installed blockage modules are in fact communicating with the monitor, and whether the number of runs set for each blockage module are correct.

Calibration Mode

Calibration mode is used to measure the typical seed flow rate as determined by seed type and the air cart settings (i.e. metering rate, fan rpm etc.). The blockage module determines a calibration value and uses it to determine when a run has blocked.

Operation Mode

This is the normal mode of flow monitoring. While the implement is in motion, the monitor will poll each blockage module for the status of its runs.

Note: This will occur regardless of which function on the monitor is presently displayed.

When the FLOW function is active, the display will show one of the following:

FLOW OFF	Indicates the system is set for zero blockage modules connected.
FLOW OPEN	Indicates that all runs are clear.
Mmm Rrr	Indicates which runs are blocked.
BLKERR	Monitor cannot communicate with one or more modules.

Important

***CALIBRATION* must be done each time the seeding rate or the seed type is changed.**

Flow - Pin Sensors - Continued

Test Mode

This mode of operation is used to verify correct installation. It allows the user to see whether all expected blockage modules are communicating with the monitor, and whether the number of runs set for each blockage module are correct.

- Use the UP or DOWN button to move the triangle icon to FLOW (Diagram 4).
- Hold the ACK button until 4 short beeps and 1 long beep sounds. Release button after the long beep.
- **TEST** or **PASSED** will be displayed on line 1.
- This action puts the system in test mode.

Note: Test mode can only be entered if the unit is stationary.

- The monitor will display on line 2 in cyclical fashion each module's number (*address*) and the number of sensors that module is set to monitor (Diagram 4).
- The operator may now verify that the number of sensors displayed for each module agrees with the individual sensors settings on each module (S1 SENSORS). This number may be different for each module on the system. (Maximum of 12 Sensors)
- Once the monitor has communicated with each module line 1 will display **PASSED** (Diagram 5).

If there are blockage modules that the monitor is unable to communicate with, then the number of sensors displayed for those modules will be blanked out. If this condition persists for numerous attempts by the monitor, an alarm will occur and **BLK ERR** will be displayed on line 1 (Diagram 6). **BLK ERR** being displayed indicates a blockage module communication failure. The module number where the communication failure has occurred will be displayed on line 2 (Diagram 6). This fault is probably caused by an improper connection of the 3-wire system, or is a result of one or more modules having an incorrect address switch setting. See Assembly Section "*Blockage Module".*

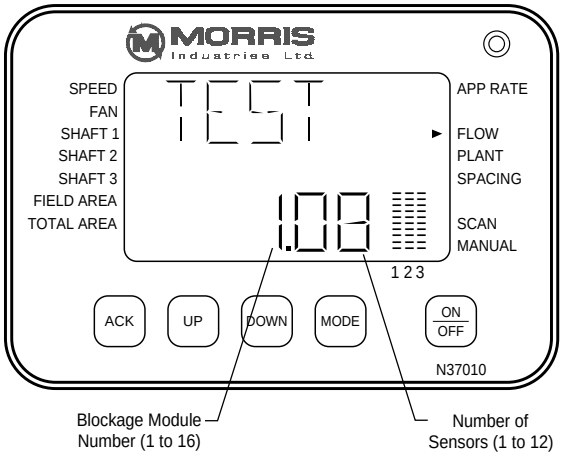

Diagram 4

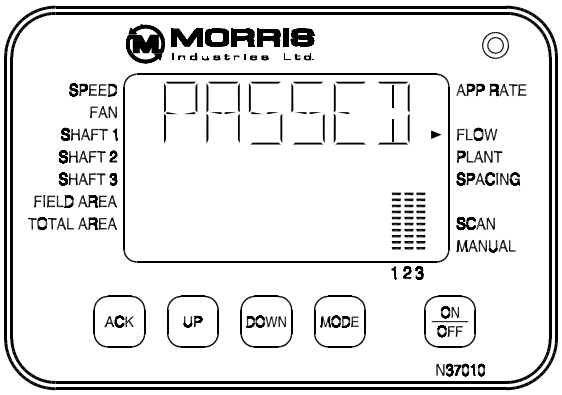

Diagram 5

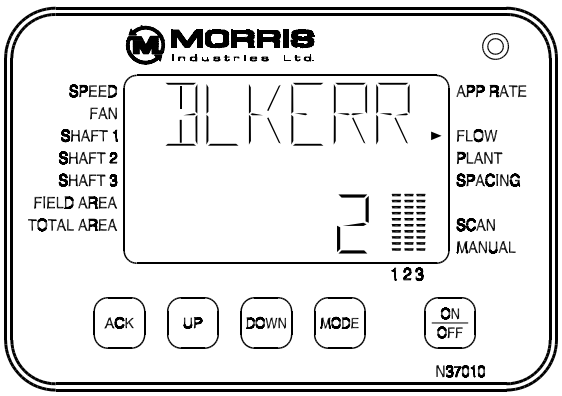

Diagram 6

Flow - Pin Sensors - Continued

Calibration Mode

Calibration mode is used to measure the typical seed flow rate as determined by seed type and the air cart settings (i.e. metering rate, fan rpm etc.). The blockage module determines a calibration value and uses it to determine when a run has blocked.

Note: Calibration must be done whenever the seeding rate or the seed type is changed

- Use the UP or DOWN button to move the triangle icon to FLOW (Diagram 4).
- Hold the ACK button until 4 short beeps and 1 long beep sounds. Release button after the long beep.
- **TEST** or **PASSED** will be displayed on line 1.
- Begin normal seeding. When the ground speed is greater than 2 mph (3.2 kph), calibration begins with **CAL** being displayed on line 1 (Diagram 7) accompanied by a double beep.

Note: There is a 30 second delay to prevent nuisance alarms occurring.

- Line 2 display will cycle through the blockage module numbers displaying which runs have **not yet calibrated** (Diagram 7).
- When all runs on a module have calibrated line 2 will display the blockage module number and **--** for the sensors (Diagram 8).
- When all modules have calibrated, the monitor will beep rapidly several times and display **CAL OK** on line 1 (Diagram 9).
- Exit calibration mode by depressing the ACK button.

Note: Do not exit calibration mode prematurely as any sensors that have not yet been calibrated will generate flow errors.

If it is desired to exit calibration mode prematurely and enter the operation mode, depress the ACK button, until 4 short beeps and 1 long beep sounds. Release button after the long beep.

Important

CALIBRATION **must be done each time the seeding rate or the seed type is changed.**

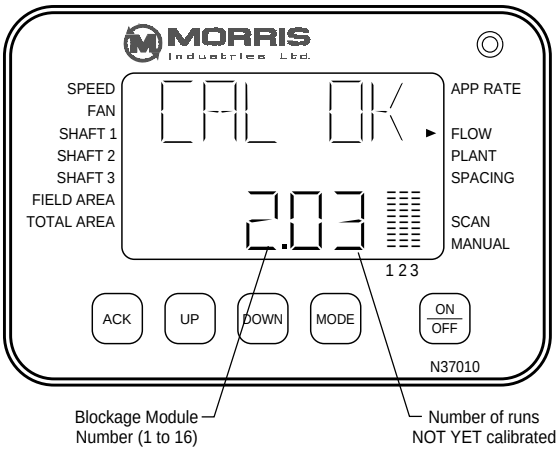

Diagram 7

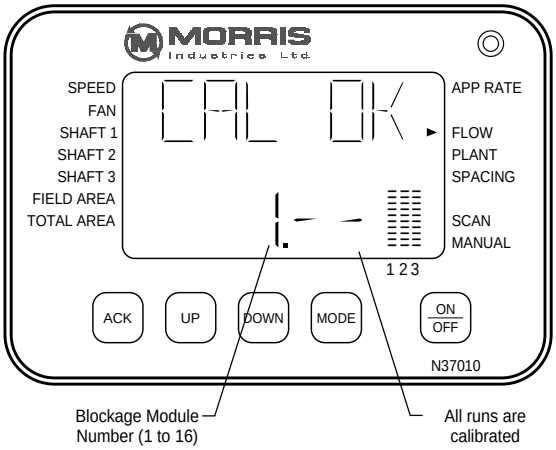

Diagram 8

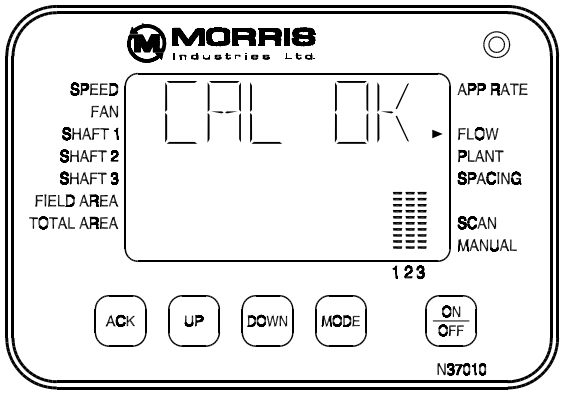

Diagram 9

Flow - Pin Sensors - Continued

Calibration Mode - Continued

Calibration should be completed in approximately two to three minutes of continuous seeding. Any runs that have not calibrated in this time may be blocked and should be cleared. Calibration is suspended when the ground speed is less than 2 mph (3.2 kph). This allows the air cart to be stopped to clear blocked runs. The calibration procedure will resume when ground speed goes above 2 mph (3.2 kph).

Runs that do not calibrate will give flow alarms when normal operation is started, except when all runs for a module do not calibrate. In this special case the module assumes that all of its runs have been intentionally disconnected, so no alarms are required. This feature is useful when an entire section of an air cart is not being used.

All calibration data is stored until the next calibration is done (even with power disconnected). This means that if the same conditions are used for seeding recalibration is not required.

Note: In double shoot system, sensors in the same module can be installed in seed and fertilizer lines and calibrated for different material flows at same time.

Note: If nuisance alarms occur change the sensitivity of the sensors by recalibrating.

Operation Mode

This is the normal mode of flow monitoring. While the implement is in motion, the monitor will poll each blockage module for the status of its runs.

Note: This will occur regardless of which function on the monitor is presently displayed.

When a blocked run is detected, an audible alarm will sound and an alarm message will be displayed. These will persist until either the alarm is acknowledged using the ACK button or the alarm condition is removed.

When the FLOW function is active, the display will be one of the following:

FLOW OFF Indicates the system is set for zero blockage modules connected.

FLOW OPEN Indicates that all runs are clear.

Mmm Rrr Indicates which runs are blocked. (See Alarms)

BLKERR Monitor cannot communicate with one or more modules. (See Alarms)

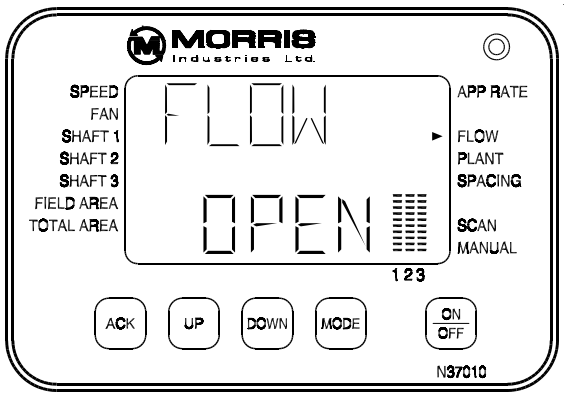

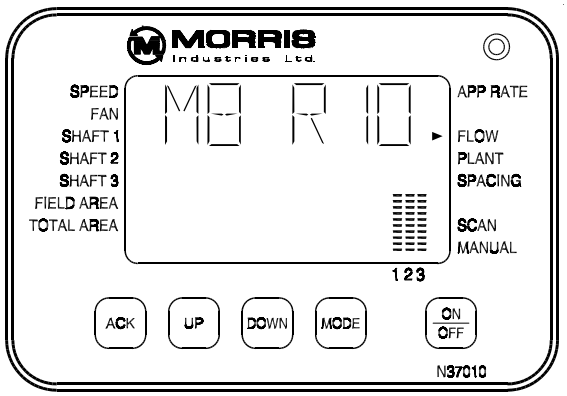

Flow - Optical Sensors

Introduction

The module should be mounted near the location of the sensors to minimize the length of cable between the sensors and the module.

The module should be bolted to a grounded metal surface. There should be a good ground path from the case of the module to the cultivator frame. Mounting the module on an air cart is not recommended. If the module must be mounted on an air cart, a ground wire should be run from the case of the module to the cultivator frame.

Optical Blockage Module Setup

The optical blockage module setup mode is different from the norm. The first screen allows the user to select which path to execute. The “Install Path” is selected by choosing “Y” by pressing the UP arrow and then pressing MODE to advance to the next screen. The “Setup Path” is selected by choosing “N” by pressing the DOWN arrow and then pressing MODE to advance to the next screen.

When the runs are connected to the optical blockage module, they must be connected in order - 1, 2, 3, ... Do not skip any runs. When an 8 is entered as the number of runs connected to the blockage module, run numbers 1 to 8 will be monitored.

Note: Once the module is mounted, it must be learned by the monitor. See the “System Installation”.

Important

***CALIBRATION* must be done each time the seeding rate or the seed type is changed.**

Note: It is highly recommended that the “Install Path” is programmed first and then the “Setup Path”.

Install			
Display 1	**Function**	**Limits**	**Comments**
MmmR--(*)	Number of runs connected to module number 1	0 to 16	Default number of runs is 16. MODE advances to the next module. If module is not connected, this number is not used in the monitor.

(*) mm is the module number. Its range is from 1 to 12.

Setup			
Display 1	**Function**	**Limits**	**Comments**
RUN	Enable/Disable individual runs in the system.	1 to the number of runs in the system.	UP/DOWN selects the RUN. The ACK key toggles between enabling and disabling an individual run. Mode advances to the SAVE screen. Default state of the runs: Enabled.

Flow - Optical Sensors - Continued

Flow Function

The FLOW function indicates the status of Flow Monitoring based on information from the Blockage Modules. Line 1 will display FLOW. Line 2 will indicate “OPEN” when all monitored runs are clear. When runs are blocked, it will display in cyclical fashion, all blocked runs. See also the section on flow alarms.

The FLOW function supports two special modes, TEST and CALIBRATE.

Flow Test

This test will inform the user as to how many “good” optical sensors are connected to each module.

At the end of the test, ACK may be pressed to return to normal mode, or the user may start planting and the calibration will automatically begin.

At any time during this test, ACK may be pressed and held until after the long beep to exit the Flow Test Mode.

Important

***CALIBRATION* must be done each time the seeding rate or the seed type is changed.**

Test		
Step	**Action**	**Desired Result (Actual)**
1	Stop the implement.	**Do not** move the implement, or run any seed, during the flow test.
2	On the FLOW screen, press and hold the ACK key for 5 seconds.	TEST should be shown on line 1. Line 2 will cycle through the module numbers.
3	Wait	This may take a few minutes, depending on configuration and application. Should hear 4 short beeps and the screen should display "TST OK" on line 1. The bottom line will cycle through the various modules connected and display, for that module, the number of **"good" sensors** connected to it. The format of this display is MMr:RR, where MM is the number of the module being reported and RR is the number of valid runs connected to this module. These numbers should correspond to the actual number of sensors connected to the modules.
4	Press ACK	Monitor should revert to FLOW OPEN.

Flow - Optical Sensors - Continued

Flow Function - Continued

Flow Calibration

In calibration mode, the module determines the normal seed flow rate for each run. This calibrated flow rate is used to determine the threshold for indicating that a run is blocked. The calibration mode must be started by command from the monitor as follows:

Calibration		
Step	**Action**	**Desired Result (Actual)**
1	Have the cart "in motion".	Should hear a double beep as the "in motion" boundary is crossed.
2	On the FLOW screen, press and hold the ACK key for 5 seconds.	CAL should be shown on line 1. Line 2 will cycle through the runs that haven't been calibrated yet.
3	Operate the cart in planting conditions.	As material flows through each tube all modules attempt to calibrate their sensors.
		Should hear 4 short beeps and the screen should display "CAL OK" on line 1 and "--" on line 2. This may take a few minutes, depending on configuration and application.
4	Press ACK	Monitor should revert to FLOW OPEN.

At any time during this test, ACK may be pressed and held until after the long beep to exit the Flow Test Mode.

Sensor Replacement

The monitor will alarm the operator if there is a faulty sensor in the system.

To replace the faulty sensor, the replacement sensor is plugged into the harness **prior to turning on the monitor**. When the power is turned on, the monitor will learn the new sensor in place of the faulty sensor.

Note: This procedure will work when there is only one faulty sensor in the system.

When there is **more than one faulty sensor** in the system the installation of the replacement sensors is handled differently.

The monitor is turned on with nothing connected at the faulty sensor locations. The monitor will tell the operator what sensor should be attached to the harness. When it is attached the monitor will recognize it and then ask for the next sensor to be attached. This continues until all the replacement sensors have been attached.

Sensor Gap Settings

Reed Switch Sensors

These sensors are used on slowly revolving shafts, in this case the meters and ground speed.

Check the gap between the sensor and actuator.

A gap of .030” (0.76 mm) is recommended.

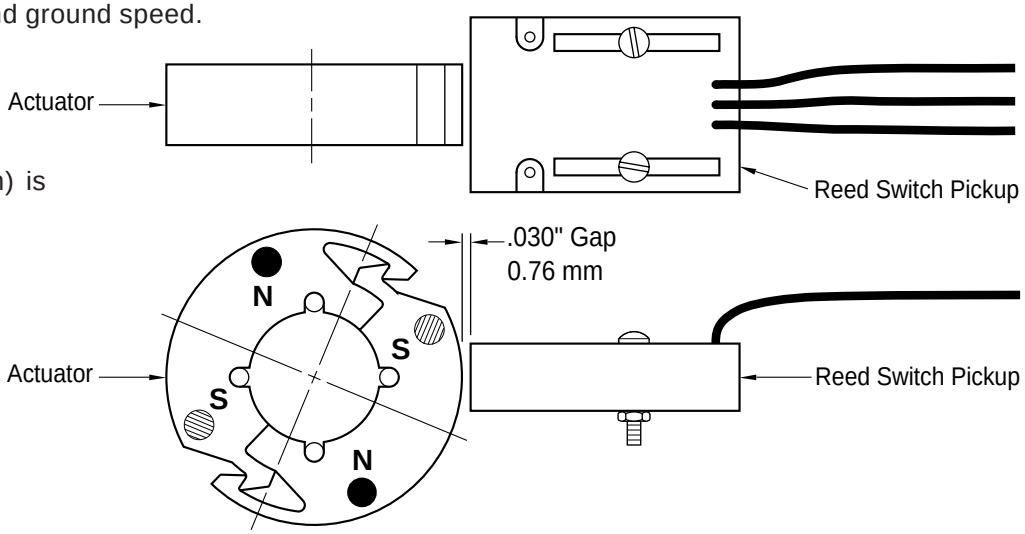

Variable Reluctance Sensors

These sensors are used on high speed shafts, in this case, the fan.

Target to sensor gap is critical with these sensors.

A gap of .030” (0.76 mm) is recommended.

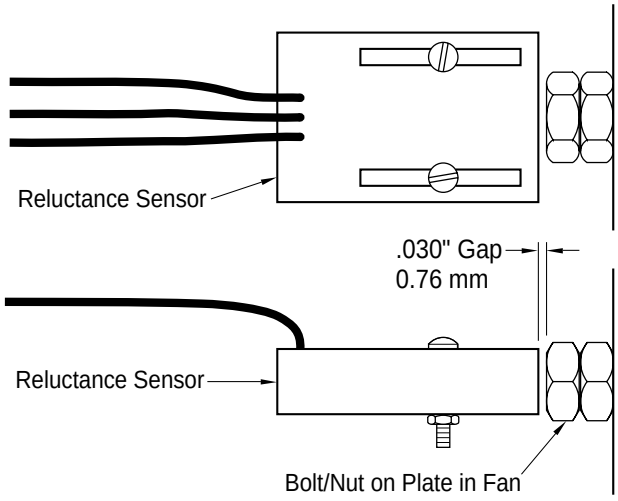

Trouble Shooting Guides

Most electronic problems are usually one of the following:

- Harness connections.
- Harness to sensor connections.
- Damaged harness wires.
- Loose terminal in harness plug.
- Sensor to Actuator clearance.
- Defective sensor.

The monitor will alert the operator of these problems as outlined under *"Communication Alarms"* and *"System Error Alarms".*

Checking Harness

First, check for the obvious things like broken connections, loose terminals, insulation rubbed off and so forth.

- Check continuity of wires with ohm meter.
- Take the connector shells off to see if any wires have worked loose.

Checking Sensors

The best approach to testing a sensor is to substitute a suspected sensor with a known good one. If the problem goes away, the sensor is faulty. If it does not go away, it is faulty wiring.

Note: On Tank Level Sensors ensure there is no foreign material covering the optical sensor. Remove material with a cloth as not to damage lens.

Checking Blockage Modules

The best approach to testing a sensor is to substitute a suspected sensor with a known good one. If the problem goes away, the sensor is faulty. If it does not go away, it is faulty wiring or Blockage Module.

Note: On Pin Sensor, seed or material dust on the sensor may prevent the sensor from accurately sensing seed hits. The sensor pin may be cleaned using a sharp knife and gently scraping away the caked on material.

On Optical Sensor, use a damp non-abrasive cloth as not to scratch sensor eye.

1.0 General Description

The Air Seeder Field Test Unit (FTU) is designed to be a tool for determining the functionality of various components used in the Air Seeder Monitor system. It will test shaft sensors, radar ground speed sensors, bin level sensors, and seed counting sensors. It will also act as a simulator, simulating the various sensors used on an air seeder system, allowing the monitor console to operate as though it were on an operating seeder.

The FTU has two modes of operation, sensor test mode, and console test mode. In sensor test mode, the FTU will test any type of sensor that is plugged into the MUXBUS connector. A coil on the side of the FTU allows excitation of rotations sensors (reed switch and magnetic pickups).

In console test mode, the FTU will simulate sensors connected to the MUXBUS. This allows the monitor console to be operated as though it were on an operating air seeder. On the FTU, the user can adjust the ground speed, shaft speed, bin level, and population. The user can also simulate conditions that might occur on an operating seeder, such as engaging and disengaging the clutch, stopping a shaft, high or low fan speed, low population rate, blocked run, or a failed sensor.

A sub-mode of the console test mode is the install mode. This mode is used to install virtual sensors to the monitor console connected to the FTU.

The unit is packaged in a black molded plastic case. Three cables are stored in the case, a power cable, a MUXBUS cable, and a radar cable.

2.0 Inputs and Outputs

2.1 Power Input Cable

12 Vdc nominal, 2 wire power cable. This cable can be connected to tractor power or a 12 Vdc power supply. This power input is used only when operating in sensor test mode. When the FTU is connected to a monitor console, the FTU takes its power from the MUXBUS cable of the monitor console.

2.2 MUXBUS Cable

The MUXBUS cable is terminated in both male and female 3-pin Packard WeatherPak connectors, allowing the FTU to connect to either a monitor console or a sensor.

2.3 Radar

The radar input is a 4 conductor cable terminated with both a male and female 4-pin AMP CPC connectors, allowing the radar cable to function either as a radar input or a simulated radar output. The simulated radar output is used to test the radar input of a monitor console in console test mode.

2.4 Sensor Test Output

The FTU contains an internal coil that generates a magnetic field at the side of the case for testing shaft, fan, and ground speed sensors. If one of these sensors are held at the side of the case where indicated, the alternating magnetic field generated by the coil will activate the sensor. This is used in sensor test mode only.

FTU - Field Test Unit

3.0 Operator Controls and Indicators

With the exception of the Up and Down keys, each key has two indicators associated with it. The lower indicator (OFF) usually indicates when a sensor has been turned off. The upper indicator usually indicates when a sensor has been selected for adjustment with the Up and Down keys.

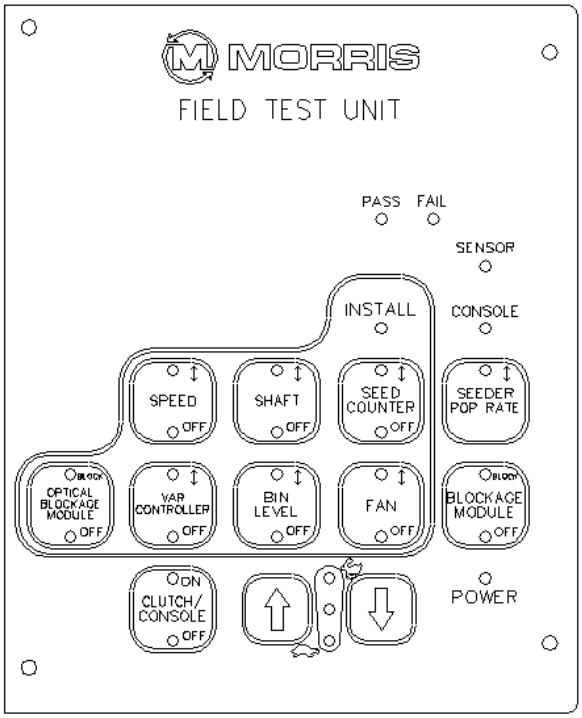

FIGURE 1. KEYS AND INDICATORS

3.1 SPEED key

The speed key is used in console test mode only. When installing sensors, pressing this key will install a ground speed shaft sensor (reed switch pickup) as the speed sensor for the system. When simulating, a short press selects the ground speed to be adjusted with the Up and Down keys and a long press will disconnect the ground speed shaft sensor.

3.2 SHAFT key

The Shaft key is used in console test mode only. When installing sensors, each press will install one shaft speed sensor (reed switch pickup). When simulating, a short press selects the first shaft sensor to be adjusted with the Up and Down keys and a long press will disconnect the first shaft sensor.

3.3 SEED COUNTER key

The Seed Counter key is used in console test mode only. When installing sensors, each press will install one seed counting sensor. When simulating, a short press selects the population rate of the first seed counter to be adjusted with the Up and Down keys and a long press will disconnect the first seed counter.

3.4 SEEDER POP RATE key

The Seeder Population Rate key is used in console test mode only. When simulating, it is used to select the population rate of all installed seed counting sensors to be adjusted with the Up and Down keys.

3.5 VAR CONTROLLER key

The VAR Controller (Variable Application Rate) key is used in console test mode only. In install mode, a short press of this key when the monitor console prompts for the speed sensor will install a Variable Application Rate controller and a long press will install a VAR Console when the monitor console prompts for one. When simulating, a short press of this key is used to select the application rate of the first shaft to be adjusted with the Up and Down keys and a long press will disconnect the VAR Controller.

3.6 BIN LEVEL key

The Bin Level key is used only in the console test mode. When installing sensors, a short press will install one single-level bin level sensor; a long press will install one 4-level bin sensor. When simulating, a short press of this key is used to select the level of the first bin sensor to be changed with the Up and Down keys and a long press disconnects the first bin level sensor.

3.7 FAN key

The Fan key is used on console test mode only. When installing sensors, each press will install one fan speed sensor (magnetic pickup). When simulating, a short press will select the speed of the first fan to be adjusted with the Up and Down keys and a long press will disconnect the first fan sensor.

3.8 BLOCKAGE MODULE key

The Blockage Module key is used in console test mode only. This key is used for simulating a pin sensor Blockage Module (not the Optical Blockage Module). When simulating, a short press will select the blockage state (blocked / unblocked) of the first run of the first blockage module to be changed with the Up and Down keys and a long press will disconnect the blockage module.

The current state (blocked or open) is indicated by the top indicator on this key.

3.9 OPTICAL BLOCKAGE MODULE key

The Optical Blockage Module key is used in console test mode only. This key is used for simulating an Optical Blockage Module (not the pin-sensor Blockage Module). When simulating, a short press will select the blockage state (blocked / unblocked) of the first run of the first blockage module to be changed with the Up and Down keys and a long press will disconnect the blockage module.

The current state (blocked or open) is indicated by the top indicator on this key.

3.10 CLUTCH / CONSOLE key

The Clutch / Console key is used in console test mode only. When simulating a non-VAR system (ground driven), a short press will enable and disable the ground drive clutch. When simulating a VAR system, a short press of this key has the function of the master shaft enable key on the Variable Rate Console; it will enable / disable all the master and all shafts on the system. A long press will disconnect the VAR Console.

The current state of the clutch (or enable) is indicated by the upper indicator on this key. The lower indicator indicates when the simulated VAR console has been turned off.

3.11 UP and DOWN keys

The Up and Down keys are used during simulation to adjust the selected setting.

3.12 High-Normal-Low indicators

The three yellow indicators between the Up and Down keys are used to indicate the relative value of the currently selected setting. The middle indicator will be on to indicate that the setting is currently at the nominal value. Nominal values for each setting are listed below.

3.13 Pass - Fail indicators

The Pass and Fail indicators are used only in sensor test mode. The Fail indicator will normally be on. When a sensor is connected to the MUXBUS connector and passes the test, the Pass indicator will come on.

3.14 SENSOR - CONSOLE - INSTALL indicators

These indicators show the current operating mode of the FTU. The Sensor indicator will be on when the FTU is in sensor test mode. The Console indicator will be on when the FTU is in console test mode. The Install indicator will be on to indicate that the FTU is in install mode.

4.0 Operational Description

The FTU has two basic modes of operation, sensor test mode and console test mode. The mode is automatically set at power up and is determined by whether the FTU sees a monitor console connected to the MUXBUS at power up. There are special modes for display of firmware version and downloading of new firmware into flash memory.

4.1 Sensor test mode

If the FTU does not see a monitor console connected to the MUXBUS at power up, it enters the sensor test mode. In this mode, several different types of sensors may be run through a basic test. When in the sensor test mode, the red Sensor indicator will be on to indicate the current mode.

When the sensor test mode is first entered, the red Fail indicator will be turned on. If a good sensor is connected and passes the test as described below, the Fail indicator will go off and the Pass indicator will come on.

4.1.1 Testing shaft and fan sensors

Shaft sensors (either ground speed shaft sensors or metering shaft sensors) and fan sensors may be tested as follows:

1. Connect the shaft sensor to the MUXBUS
2. Hold the sensor against the right side of the FTU case over the large metal screw head.
3. If the sensor is working, the green Pass indicator will come on and the beeper will sound, otherwise the red Fail indicator will stay on.
4. If it is desired to test a shaft sensor without removing it from the seeder, it can be tested by manually rotating the shaft to produce a few pulses. When only a few pulses are detected by the FTU, the pass light will blink and the beeper will sound. This test is only for shaft sensors, not fan sensors.
5. If a shaft sensor has one or more clutch inputs, these are tested by connecting each input first to +12V and then to ground. Each time any input changes state, the Pass indicator will blink. This allows all inputs to be checked.

4.1.2 Testing radar speed sensors

1. Connect the radar speed sensor to the radar connector.
2. Excite the sensor by moving your hand in front of the sensor or by moving the sensor with respect to the floor.
3. If the FTU sees the pulses from the radar sensor, the green Pass indicator will come on. If not, the red Fail indicator will remain on.

4.1.3 Testing bin level sensors

This test applies to both single-level (high/low) bin level sensors and 4-level bin sensors.

1. Connect the bin level sensor to the MUXBUS.
2. If the FTU is able to establish communication with the bin level sensor, the PASS indicator will come on.
3. Whenever the FTU detects a change in the state of the bin level sensor (from blocked to open or from open to blocked) the Pass indicator will blink. This allows each section of 4-level sensors to be checked individually.
4. a) If the single-level bin level sensor has one or more clutch inputs, these are tested by connecting each input first to +12V and then removing it.

b) If the multi-level bin level sensor has a pressure switch input, it is tested by connecting the white wire input first to Ground and then removing it (grounding the black wire will do nothing).

Each time any input changes state, the Pass indicator will blink. This allows all inputs to be checked.

4.1.4 Testing seed counting sensors

1. Connect the seed counting sensor to the MUXBUS.
2. Wait for 5 to 10 seconds for the sensor to calibrate.
3. If the sensor calibrates properly, the green Pass indicator will come on.
4. Drop a small object through the seed tube to trigger the sensor. Each time the sensor is activated, the Pass indicator will blink.
5. If the Pass indicator does not come on, or if it fails to blink when a small object is dropped through the seed tube, the sensor fails the test.

4.1.5 Testing variable rate console

1. Connect the Variable Rate Console to the MUXBUS.
2. If the FTU is able to communicate with the Variable Rate Console, the Pass indicator will come on.
3. Pressing Master Enable key or any Shaft Enable key on the VAR console will cause the indicator on the VAR console for that key to toggle between on and off. Pressing a boost key will cause the indicator for that shaft on the VAR console to blink rapidly. Pressing a cut key will cause the indicator for that shaft on the VAR console to blink slowly.

4.1.6 Testing variable rate controller

1. Connect the Variable Rate Controller to the MUXBUS.
2. If the FTU is able to communicate with the Variable Rate Controller, the Pass indicator will come on. This only tests that the FTU can communicate with the Variable Rate Controller. It does not test other functions of the controller.

4.2 Console test mode

If the FTU sees a monitor console connected to the MUXBUS when it is powered up, it will go into console test mode. In this mode the FTU can either learn the sensor configuration from the monitor console, or sensors can be manually installed using the keys on the FTU.

In order to enter the console test mode, the FTU must be powered from the monitor console. The power leads to the FTU must not be connected. If power is applied to the FTU before the monitor console is turned on, the FTU will enter the sensor test mode.

Newer monitor consoles (firmware version 1.6 or later) will output their current settings and configuration over the MUXBUS when they are turned on. The FTU will see this configuration data and automatically configure itself to simulate the sensors expected by the monitor console. In order for the FTU to see this configuration data, the FTU must be connected to the monitor console before the monitor console is turned on.

Older monitors will not output this configuration data when they are turned on. The FTU will still be able to determine what sensors the monitor console expects to see, and it will simulate these sensors. However, the FTU will not know the settings in the monitor console, for example, pulses per mile of the speed sensor or pulses per revolution of a shaft sensor. In this case, the

FTU will use default values for all settings. The monitor console settings should be changed to match the default settings of the FTU in order for the monitor console to display correct values.

If a newer monitor console is turned on before the FTU is connected, the FTU will miss the configuration data from the monitor. Newer monitor consoles should always be connected to the monitor console before the monitor console is turned on.

If the monitor console is put in the sensor learn mode, the FTU will see this and will go into the install mode. This allows virtual sensors to be installed into the monitor console using the keys on the FTU.

4.2.1 Installing sensors (Install Mode)

If it is desired to simulate using the sensor configuration already stored in the monitor, installing sensors is not necessary. In this case, proceed to section 4.2.2, Simulating sensors.

Installing sensors using this procedure allows a sensor configuration different from that currently stored in the monitor console to be used. The FTU will allow simulated sensors be installed into the monitor console, and this new sensor configuration will then be used for subsequent simulation.

After all sensors are installed, the FTU will stop communicating with the monitor console. The settings in the monitor console may have to be changed to match the internal default settings of the FTU for the monitor console to display correct values. The user should make any desired setting changes in the monitor before proceeding with simulation.

This new learned sensor configuration replaces the sensor configuration that was stored in the monitor console. If this monitor is placed back in service, the sensor learn procedure must be repeated.

Continued next page . . . . . .

4.2.1 Installing sensors (Install Mode) - Continued

Procedure for installing virtual sensors through the FTU:

1. Connect the monitor console to the MUXBUS connection of the FTU.
2. Connect power to the monitor console.
3. Turn on the monitor console, using a 2-key (ACK-DOWN)or 3-key (ACK-DOWN-MODE) power on combination to place the monitor in the sensor learn mode.
4. Wait until the monitor console prompts for a sensor to be installed. The FTU should go into install mode.
5. If a radar ground speed sensor is to be installed, connect the FTU radar cable to the radar cable of the monitor console. This will automatically install the radar sensor.
6. Sensors may now be installed one at a time using the FTU keys in response to the prompts on the monitor display.

Sensor Installing	
To install:	Press:
Ground speed shaft sensor	Speed key
Variable Rate Controller	VAR Controller key **[1]**
Fan sensor	Fan key
Shaft sensor	Shaft key
Single-level bin level sensor	Short press of Bin Level key
4-level bin level sensor	Long press of Bin Level key
Variable Rate Console	Long press of VAR Controller key
Seed counting sensor	Seed Counter key
Optical Blockage Module	Optical Blockage Module key

[1] The VAR controller must be installed when the monitor console prompts to install the speed sensor.

7. If a sensor is to be skipped, pressing the ACK key on the monitor console will cause the monitor console to skip this sensor.
8. When all sensors have been learned or skipped, the FTU stop communicating with the monitor console.
9. Change the settings on the monitor to the desired values, if necessary.
10. Turn off the monitor console.
11. Proceed to section 4.2.2, Simulating sensors.

Note that the install procedure is not used with the pin-sensor Blockage Modules. There is a setting in the monitor to tell it if pin-sensor Blockage Modules are used. Optical Blockage Modules are installed in the same manner as other sensors. Optical Blockage Modules and pin-sensor Blockage Modules cannot be used together in the same system.

4.2.2 Simulating sensors

In this procedure the FTU simulates sensors for the monitor console, so that the monitor console appears to be connected to an operating seeder.

When connected to a newer monitor console, the monitor console will output its current sensor configuration and settings when it is turned on. The FTU will read this configuration data and adjust its internal settings to match the settings in the monitor console. If the FTU is connected to an older monitor console that does not output its configuration data, the settings in the monitor console must be changed to match the FTU's internal default settings in order to obtain correct displayed values on the monitor console.

1. Connect the monitor console to the MUXBUS connector of the FTU.
2. Connect power to the monitor console.
3. Turn on the monitor console.
4. The monitor console will output the current sensor configuration and settings on the MUXBUS. These will be read by the FTU.
5. The FTU will begin simulating the sensors.

The table below lists the default values for the FTU. If using an older monitor that does not output its configuration data, the settings in the monitor must be changed to match these values to obtain correct displayed valued on the monitor during simulation.

Monitor Settings			
Sensor		Parameters	Nominal simulated value
Speed	Shaft	PPM = 3408; PPR = 4	5 MPH
	Radar	PPM = 212040	5 MPH
	VAR	PPM = 30171	5 MPH
Fan		PPR = 2	4000 RPM
1st shaft (Seed)		PPR = 4	10 RPM
2nd shaft (Fert)		PPR = 2	10 RPM
3rd shaft (Aux)		PPR = 2	10 RPM
Seed counters			20000 seeds/ac

4.2.3 Changing simulated sensor values

Once the FTU is simulating sensors, various sensor settings may be changed to simulate conditions that may occur in actual operation of a seeder.

First the setting to be changed is selected, then the Up and Down keys are used to adjust the setting. The relative value of the selected setting (high-normal-low) will be indicated on the three indicators between the Up and Down keys.

When a key is pressed to select a value to be changed, the top indicator on that key will come on to indicate which value is currently selected.

Simulated Sensor Values				
Setting to be changed	**Select with this key (short press)**	**Nominal value**	**Each Up or Down press changes by**	**Indicators**
Ground speed	SPEED	5 MPH	1 MPH	High-Normal-Low relative to nominal
Fan speed of first fan	FAN	4000 RPM	1000 RPM	High-Normal-Low relative to nominal
Bin level of first bin	BIN LEVEL	High	1-level: UP=high, DOWN=low 4-level: one level step	High-Low High-Med-Low-Off
Shaft RPM of first shaft	SHAFT	10 RPM	1 RPM	High-Normal-Low relative to nominal
Population rate of first seed counter	SEED COUNTER	Population rate of entire seeder (below)	1,000 seeds / ac	High-Normal-Low relative to nominal seeder population
Population rate of entire seeder	SEEDER POP RATE	20,000 seeds / ac	1,000 seeds / ac	High-Normal-Low relative to nominal
Blockage of first run of first module	BLOCKAGE MODULE	Open	Pressing the Blockage Module key will toggle the blocked condition.	Block indicator at top of key indicates blocked state.
Blockage of first run of first module	OPTICAL BLOCKAGE MODULE	Open	Pressing the Optical Blockage Module key will toggle the blocked condition.	Block indicator at top of key indicates blocked state.

4.2.4 Simulating a failed sensor

Simulating a failed sensor can be done by turning a sensor off.

Simulate Failed Sensor		
To turn off this sensor:	**A long press on this key:**	**Notes:**
Ground speed sensor (shaft sensor or Radar)	Speed	
VAR Controller	VAR Controller	
Fan sensor	FAN	Turns off first fan only
Bin level sensor	BIN LEVEL	Turns off first bin level sensor only
Shaft RPM sensor	Shaft	Turns off first shaft sensor only
VAR Console	Clutch / Enable	Only if VAR controller is installed
Seed counting sensor	Seed Counter	Turns off first seed counting sensor only.
Blockage Module	Blockage Module	Turns off first blockage module only.
Optical Blockage Module	Optical Blockage Module	Turns off first blockage module only.

When the sensor is turned off, the red OFF indicator for that key will be lit.

A second long press on the key will turn the sensor back on.

4.3 Version/Issue Mode

In order to enter this mode, apply power holding the Up and Down Arrow Keys and then release.

The FTU will then use the Pass and Fail LEDs to blink out the Ver/Iss. The Pass LED will blink out the Version number and when the Version number is done, the Fail LED will blink out the Issue number.

The FTU will continue blinking out these numbers until power is removed.

5.0 Electrical specifications

Nominal supply voltage	12 Vdc
Nominal current consumption	Less than 1 amp (estimated)
Supply voltage range:	9 to 16 VDC (as per ASAE EP455 5.10.1).
MUXBUS connection:	3-pin Packard WeatherPak connectorA - +12 VdcB - GNDC - Data
Radar connection:	4-pin AMP CPC connector1 - GND2 - Radar signal3 - +12 Vdc to Radar4 - Radar present signal
Power connection:	The unit is powered by a AGCO Air Seeder Monitor over the MUXBUS cable (console test mode) or from a separate power input (sensor test mode).
Overvoltage:	Can withstand over voltage of up to +25V for up to 5 minutes.
Reverse polarity:	Can withstand reverse polarity of -25V for up to 5 minutes.

6.0 Environmental specifications

Operating Temperature:	0 to +55 degrees Celsius
Storage Temperature:	-30 to +55 degrees Celsius

Dust exposure will not cause impaired function of the unit.

7.0 Physical specifications

The test unit is approximately a rectangular suitcase measuring 12 in x 9 in x 4 in.

The test unit case is black blow molded plastic.

The front panel overlay is polycarbonate over a metal plate.

The three wire AWG#18 jacketed MUXBUS cable is 24" long and ended with a WeatherPak tower connector (P/N JS-12015793). From this point the three wire cable, 8" long, is connected in parallel and ended with a WeatherPak shroud connector (P/N JS-12010717).

The four wire AWG#18 jacketed radar cable is 24" long and ended with a AMP CPC male connector (shell # JS-206429-1). From this point the four wire cable, 9" long, is connected in parallel and ended with a AMP CPC female connector (shell # JS-206430-2).

The power cable is 5 feet of SJTW 18 2. It is mounted with a circular strain relief.

An internal auto-resetable breaker (or polyswitch) is mounted on the circuit board. There are no user serviceable parts inside the unit.

The printed circuit boards are coated against humidity.

Fan & Auger Hydraulics
8300 & 8370 - Tow Behind Hydraulic Drive w/Auger

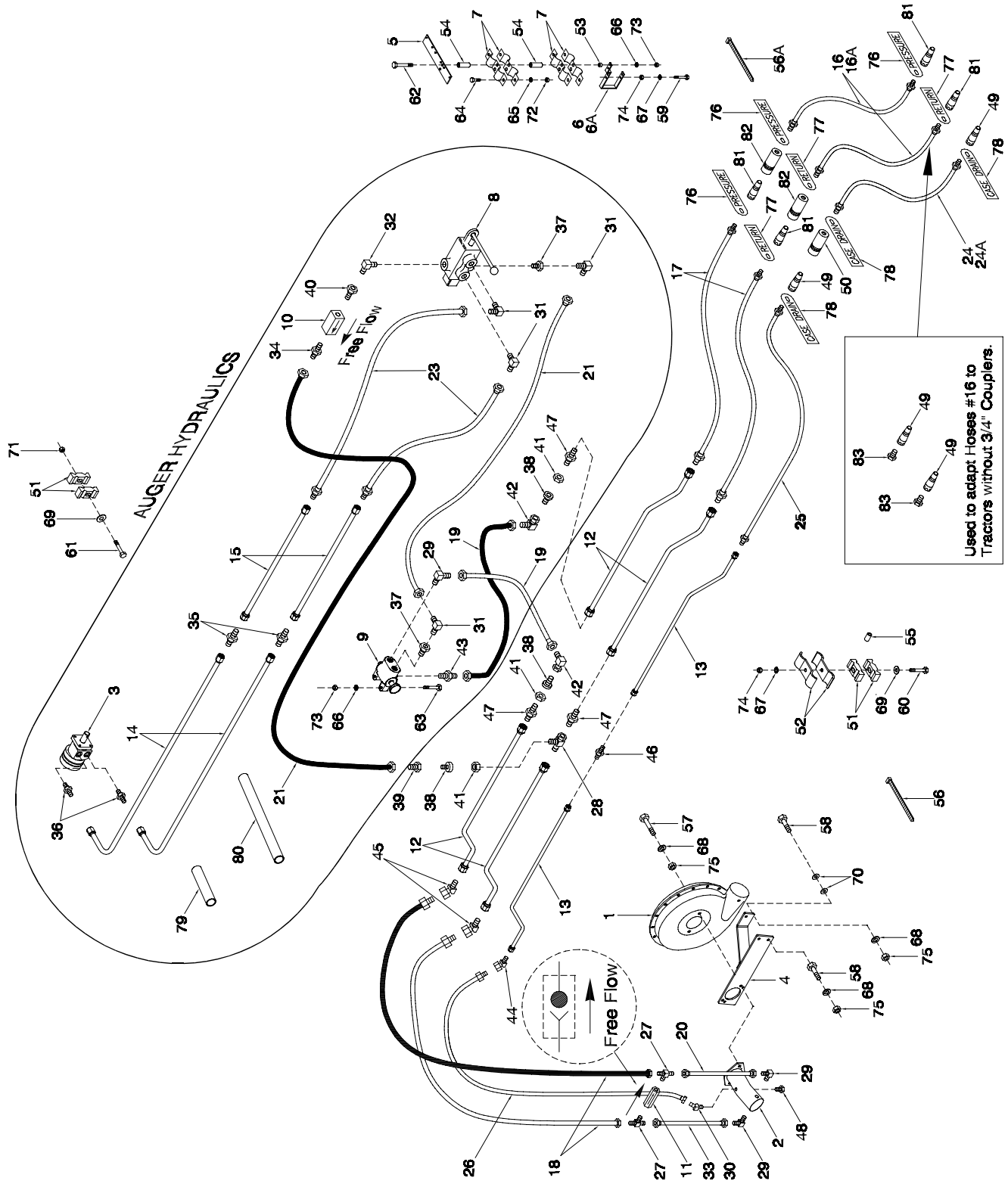

Fan & Auger Hydraulics - 8300 & 8370 Tow Behind Hydraulic Drive w/Auger

Item	Part No.	Description	Qty
1	* * * * *	Fan	1
2	* * * * *	Hydraulic Motor - Rexroth	1
	N25508	Seal Kit for Rexroth Motors	1
	N25507	Seal Only for Rexroth Motors	1
3	N36627	Orbit Motor	1
	N16731	Seal Kit for N36627	1
	N25319	Shaft for N36627	1
4	N19357	Fan Bracket - Tow Behind	1
5	N21690	Mount Bracket	1
6	N21691	Mount Bracket - 4	1
6A	N27589	Mount Bracket - 6	1
7	N16608	Coupler Clamp - Female Pioneer	4
8	N34495	Control Valve w/7/8-14 FORB x 1 1/16-12 FORB	1
	N31605	Seal Kit for N34495	1
	N24595	Handle for N34495	1
9	N34506	Selector Valve	1
	N31603	Seal Kit for N34506	1
	C26358	Knob for N34506	1
10	N34494	Check Valve w/3/4 - 16 FORB	1
11	N16399	Check Valve - 7 PSI - 1 1/16-12 ORB	1
12	N36833	Oil Line - 1 x 94 Lg w / 6 Offset Bend x 1 5/16-12 FJIC	4
13	N36444	Oil Line - 1/2 x 94 Lg w / 6 Offset Bend x 3/4-16 FJIC	2
14	N36498	Oil Line - 5/8 x 104 Lg w/90 Degree Bend x 7/8-14 FJIC	2
15	C-4363	Oil Line - 5/8 x 38 Lg w/ 7/8-14 FJIC	2
16	N37036	Hyd Hose - 3/4 x 396 Lg w/1 1/16-12 MORB	2
16A	N37035	Hyd Hose - 3/4 x 348 Lg w/1 1/16-12 MORB	2
17	N37037	Hyd Hose - 3/4 x 270 Lg w/1 5/16-12 MJIC x 1 1/16-12 MORB	2
18	N19434	Hyd Hose - 3/4 x 35 Lg w/1 5/16-12 MJIC x 1 1/16-12 FJIC	2
19	N25644	Hyd Hose - 3/4 x 35 Lg w/1 1/16-12 FJIC	2
20	N15991	Hyd Hose - 3/4 x 12 Lg w/1 1/16-12 FJIC	1
21	C26336	Hyd Hose - 1/2 x 198 w/ 7/8-14 FJIC	2
23	C-4387	Hyd Hose - 1/2 x 36 Lg w/7/8-14 MJIC x 7/8-14 FJIC	2
24	N36045	Hyd Hose - 3/8 x 396 Lg w/7/8-14 MORB	1
24A	N36043	Hyd Hose - 3/8 x 348 Lg w/7/8-14 MORB	1
25	N34510	Hyd Hose - 3/8 x 222 Lg w/3/4-16 MJIC x 7/8-14 MORB	1
26	N19475	Hyd Hose - 3/8 x 48 Lg w/9/16-18 FJIC x 3/4-16 MJIC	1
27	N16388	Tee - (2) 1 1/16-12 MJIC x (1) 1 1/16-12 MORB	2
28	N19336	Tee - Swivel - (1) 1 5/16-12 FJIC x (2) 1 5/16-12 MJIC	1
29	N16359	90 Elbow - 1 1/16-12 MJIC x 1 1/16-12 MORB	3
30	N19578	45 Elbow - 9/16-18 MJIC x 9/16-18 MORB	1
31	C15318	90 Elbow - 7/8-14 MJIC x 7/8-14 MORB	4
32	N34644	90 Elbow - 3/4-16 MJIC x 1/16-12 MORB	1
33	N37900	Hyd Hose - 3/4 x 18 Lg w/1 1/16-12 FJIC	1
34	C14840	Connector - 7/8-14 MJIC x 3/4-16 MORB	1
35	C-4469	Connector - 7/8-14 MJIC	2
36	N36489	Connector - 7/8-14 MJIC x 7/8-14 MORB	2
37	N34499	Connector - 1 1/16-12 MORB x 7/8-14 FORB	2
38	N19338	Connector - 1 1/16-12 MJIC	3
39	N19337	Connector - 7/8-14 MJIC x 1 1/16-12 FJIC	1
40	N34503	Connector - 3/4-16 MORB x 3/4-16 FJIC	1
41	N19432	Nut - 1 5/16-12 FJIC	3
42	N21189	90 Elbow - Swivel - 1 1/16-12 FJIC x 1 1/16-12 MJIC	2
43	N15990	Connector 1-1/16-12 MJIC x 1-1/16-12 MORB	1
44	N36380	45 Elbow - Swivel - 3/4-16 FJIC x 3/4-16 MJIC	1

Fan & Auger Hydraulics - 8300 & 8370 Tow Behind Hydraulic Drive w/Auger

Item	Part No.	Description	Qty
45	N36382	45 Elbow - Swivel - 1 5/16-12 FJIC x 1 5/16-12 MJIC	2
46	N25754	Connector - 3/4-16 MJIC	1
47	N16346	Connector - 1 5/16-12 MJIC	3
48	N16621	Plug - 9/16-18 MORB	1
49	N34498	Male Pioneer Tip - 7/8-14 FORB	2
50	N34488	Pioneer Coupler - 7/8-14 FORB	1
51	C-4698	Nylon Oil Line Clamp	14
52	D-4808	Oil Line Clamp	8
53	N13901	Bushing - 5/8 OD x 3/8 ID x 3/8 Lg	2
54	N19458	Spacer	4
55	N21632	Oil Line Spacer	4
56	D-4838	Nylon Tie Strap - 14 1/2 Lg	16
56A	D-4951	Nylon Tie Strap - 7 3/8 Lg	9
57	S-1189	Hex Bolt - 1/2 x 1 3/4 Lg	2
58	S-776	Hex Bolt - 1/2 x 1 1/2 Lg	4
59	C-3918	Hex Bolt - 3/8 x 5 Lg	1
60	D-5249	Hex Bolt - 3/8 x 3 1/4 Lg	4
61	W-479	Hex Bolt - 3/8 x 2 1/4 Lg	3
62	S13337	Hex Bolt - 5/16 x 6 Lg	2
63	S-1303	Hex Bolt - 5/16 x 2 Lg	2
64	W-469	Hex Bolt - 1/4 x 3/4 Lg	4
65	W-521	Lockwasher - 1/4	4
66	W-522	Lockwasher - 5/16	4
67	W-523	Lockwasher - 3/8	5
68	W-525	Lockwasher - 1/2	6
69	W-538	Flatwasher - 3/8	7
70	S-751	Flatwasher - 1/2	2
71	D-5279	Serrated Locknut - 3/8	3
72	W-512	Hex Nut - 1/4	4
73	W-513	Hex Nut - 5/16	4
74	W-514	Hex Nut - 3/8	5
75	W-516	Hex Nut - 1/2	6
76	N34576	Tag - Hose ID - Air Tank - Fan/Auger - PRESSURE	3
77	N34577	Tag - Hose ID - Air Tank - Fan/Auger - RETURN	3
78	N34578	Tag - Hose ID - Air Tank - Fan/Auger - CASE DRAIN	3
79	N42083	Rubber Hose Cover - 2 ID x 36 Lg	1
80	N37401	Rubber Hose Cover - 2 ID x 12 Lg	1
81	N37914	3/4 Male Tip - 1 1/16-12 FORB	2
82	N37915	3/4 Female Coupler - 1 1/16-12 FORB	2
83	N37039	Reducer - 1 1/16-12 FORB x 7/8-14 MORB	2
	N19023	Decal - Danger “HOT” (Not Shown)	1
	N36263	Decal - Warning “BURN HAZARD” (Not Shown)	1
	N36443	Decal - “LEVER POSITION” (Not Shown)	1
	N36453	Decal - “AUGER / FAN” (Not Shown)	1

Fan & Auger Drives
8435, 8630 & 8650 - Tow Behind Hydraulic Drive w/Auger

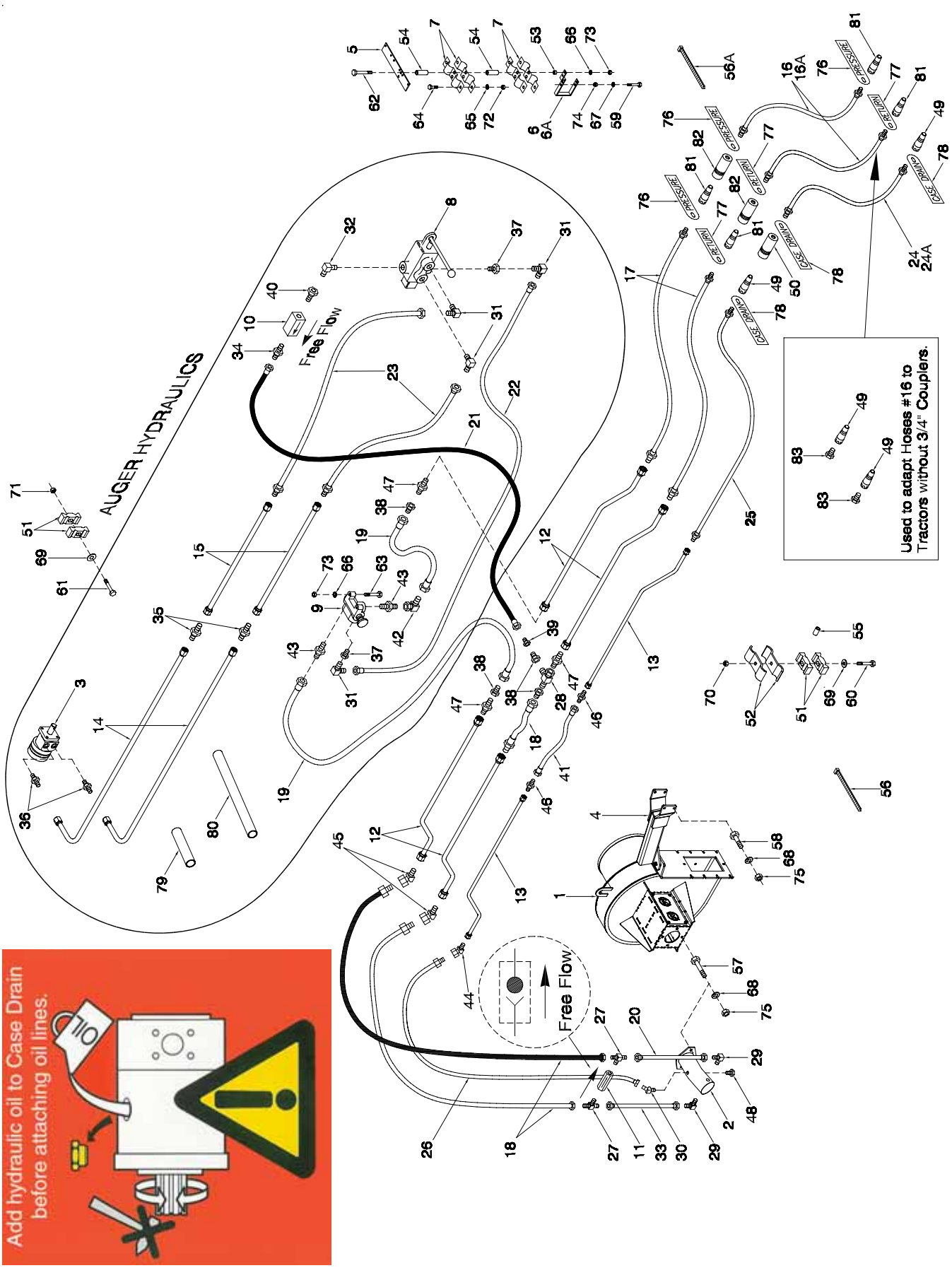

Fan & Auger Drives - 8435, 8630 & 8650 Tow Behind Hydraulic Drive w/Auger

Item	Part No.	Description	Qty
1	N37826	Fan (See Section 7)	1
2	N37742	Hydraulic Motor - 16cc - Rexroth (See Section 7)	1
	N25508	Seal Kit for Rexroth Motors	1
	N25507	Seal Only for Rexroth Motors	1
3	N37047	Orbit Motor	1
	N16731	Seal Kit for N37047	1
	N44278	Shaft for N37047	1
4	N44568	Fan Bracket - Tow Behind (See Section 7)	1
5	N21690	Mount Bracket	1
6	N21691	Mount Bracket - 4	1
6A	N27589	Mount Bracket - 6	1
7	N16608	Coupler Clamp - Female Pioneer	4
8	N34495	Control Valve w/7/8-14 FORB x 1 1/16-12 FORB	1
	N31605	Seal Kit for N34495	1
	N24595	Handle for N34495	1
9	N37514	Selector Valve	1
	N31603	Seal Kit for N34506	1
	C26358	Knob for N34506	1
10	N34494	Check Valve w/3/4 - 16 FORB	1
11	N16399	Check Valve - 7 PSI - 1 1/16-12 ORB	1
12	N36833	Oil Line - 1 x 94 Lg w / 6 Offset Bend x 1 5/16-12 FJIC	4
13	N36444	Oil Line - 1/2 x 94 Lg w / 6 Offset Bend x 3/4-16 FJIC	2
14	N36498	Oil Line - 5/8 x 104 Lg w/90 Degree Bend x 7/8-14 FJIC	2
15	C-4364	Oil Line - 5/8 x 53 Lg w/ 7/8-14 FJIC	2
16	N37036	Hyd Hose - 3/4 x 396 Lg w/1 1/16-12 MORB	2
16A	N37035	Hyd Hose - 3/4 x 348 Lg w/1 1/16-12 MORB	2
16B	N44955	Hyd Hose - 3/4 x 456 Lg w/1 1/16-12 MORB (5-Frame Contour Air Drill)	2
17	N37037	Hyd Hose - 3/4 x 270 Lg w/1 5/16-12 MJIC x 1 1/16-12 MORB	2
18	N19434	Hyd Hose - 3/4 x 35 Lg w/1 5/16-12 MJIC x 1 1/16-12 FJIC	3
19	N25644	Hyd Hose - 3/4 x 35 Lg w/1 1/16-12 FJIC	2
20	N15991	Hyd Hose - 3/4 x 12 Lg w/1 1/16-12 FJIC	1
21	C26336	Hyd Hose - 1/2 x 198 w/ 7/8-14 FJIC	1
22	S29841	Hyd Hose - 1/2 x 222w/ 7/8-14 FJIC	1
23	N42543	Hyd Hose - 1/2 x 39 Lg w/7/8-14 MJIC x 7/8-14 FJIC	2
24	N36045	Hyd Hose - 3/8 x 396 Lg w/7/8-14 MORB	1
24A	N36043	Hyd Hose - 3/8 x 348 Lg w/7/8-14 MORB	1
24B	N44956	Hyd Hose - 3/8 x 456 Lg w/7/8-14 MORB (5-Frame Contour Air Drill)	1
25	N37180	Hyd Hose - 3/8 x 270 Lg w/3/4-16 MJIC x 7/8-14 MORB	1
26	N19475	Hyd Hose - 3/8 x 48 Lg w/9/16-18 FJIC x 3/4-16 MJIC	1
27	N16388	Tee - (2) 1 1/16-12 MJIC x (1) 1 1/16-12 MORB	2
28	N19336	Tee - Swivel - (1) 1 5/16-12 FJIC x (2) 1 5/16-12 MJIC	1
29	N16359	90 Elbow - 1 1/16-12 MJIC x 1 1/16-12 MORB	2
30	N19578	45 Elbow - 9/16-18 MJIC x 9/16-18 MORB	1
31	C15318	90 Elbow - 7/8-14 MJIC x 7/8-14 MORB	4
32	N34644	90 Elbow - 3/4-16 MJIC x 1/16-12 MORB	1
33	N37900	Hyd Hose - 3/4 x 18 Lg w/1 1/16-12 FJIC	1
34	C14840	Connector - 7/8-14 MJIC x 3/4-16 MORB	1
35	C-4469	Connector - 7/8-14 MJIC	2
36	N36489	Connector - 7/8-14 MJIC x 7/8-14 MORB	2
37	N34499	Connector - 1 1/16-12 MORB x 7/8-14 FORB	2
38	N19338	Connector - 1 1/16-12 MJIC	3
39	N19337	Connector - 7/8-14 MJIC x 1 1/16-12 FJIC	1
40	N34503	Connector - 3/4-16 MORB x 3/4-16 FJIC	1
41	D10821	Hyd Hose - 3/8 x 38 Lg w/3/4-16 FJIC	1
42	N21189	90 Elbow - Swivel - 1 1/16-12 FJIC x 1 1/16-12 MJIC	1

Fan & Auger Drives - 8435, 8630 & 8650 Tow Behind Hydraulic Drive w/Auger

Item	Part No.	Description	Qty
43	N15990	Connector 1 1/16-12 MJIC x 1 1/16-12 MORB	2
44	N36380	45 Elbow - Swivel - 3/4-16 FJIC x 3/4-16 MJIC	1
45	N36382	45 Elbow - Swivel - 1 5/16-12 FJIC x 1 5/16-12 MJIC	2
46	N25754	Connector - 3/4-16 MJIC	2
47	N16346	Connector - 1 5/16-12 MJIC	2
48	N16621	Plug - 9/16-18 MORB	1
49	N34498	Male Pioneer Tip - 7/8-14 FORB	2
50	N34488	Pioneer Coupler - 7/8-14 FORB	1
51	C-4698	Nylon Oil Line Clamp	14
52	D-4808	Oil Line Clamp	8
53	N13901	Bushing - 5/8 OD x 3/8 ID x 3/8 Lg	2
54	N19458	Spacer	4
55	N21632	Oil Line Spacer	4
56	D-4838	Nylon Tie Strap - 14 1/2 Lg	22
56A	D-4951	Nylon Tie Strap - 7 3/8 Lg	9
57	S-1189	Hex Bolt - 1/2 x 1 3/4 Lg	2
58	S-776	Hex Bolt - 1/2 x 1 1/2 Lg	4
59	C-3918	Hex Bolt - 3/8 x 5 Lg	1
60	D-5249	Hex Bolt - 3/8 x 3 1/4 Lg	4
61	W-479	Hex Bolt - 3/8 x 2 1/4 Lg	3
62	S13337	Hex Bolt - 5/16 x 6 Lg	2
63	S-1303	Hex Bolt - 5/16 x 2 Lg	2
64	W-469	Hex Bolt - 1/4 x 3/4 Lg	4
65	W-521	Lockwasher - 1/4	4
66	W-522	Lockwasher - 5/16	4
67	W-523	Lockwasher - 3/8	1
68	W-525	Lockwasher - 1/2	6
69	W-538	Flatwasher - 3/8	7
70	M-3388	Locknut - 3/8	4
71	D-5279	Serrated Locknut - 3/8	3
72	W-512	Hex Nut - 1/4	4
73	W-513	Hex Nut - 5/16	4
74	W-514	Hex Nut - 3/8	1
75	W-516	Hex Nut - 1/2	6
76	N34576	Tag - Hose ID - Air Tank - Fan/Auger - PRESSURE	3
77	N34577	Tag - Hose ID - Air Tank - Fan/Auger - RETURN	3
78	N34578	Tag - Hose ID - Air Tank - Fan/Auger - CASE DRAIN	3
79	N37401	Rubber Hose Cover - 2 ID x 12 Lg	1
80	N42083	Rubber Hose Cover - 2 ID x 36 Lg	1
81	N37914	3/4 Male Tip - 1 1/16-12 FORB	2
82	N37915	3/4 Female Coupler - 1 1/16-12 FORB	2
83	N37039	Reducer - 1 1/16-12 FORB x 7/8-14 MORB	2
	N19023	Decal - Danger “HOT” (Not Shown)	1
	N36263	Decal - Warning “BURN HAZARD” (Not Shown)	1
	N36443	Decal - “LEVER POSITION” (Not Shown)	1
	N36453	Decal - “AUGER / FAN” (Not Shown)	1

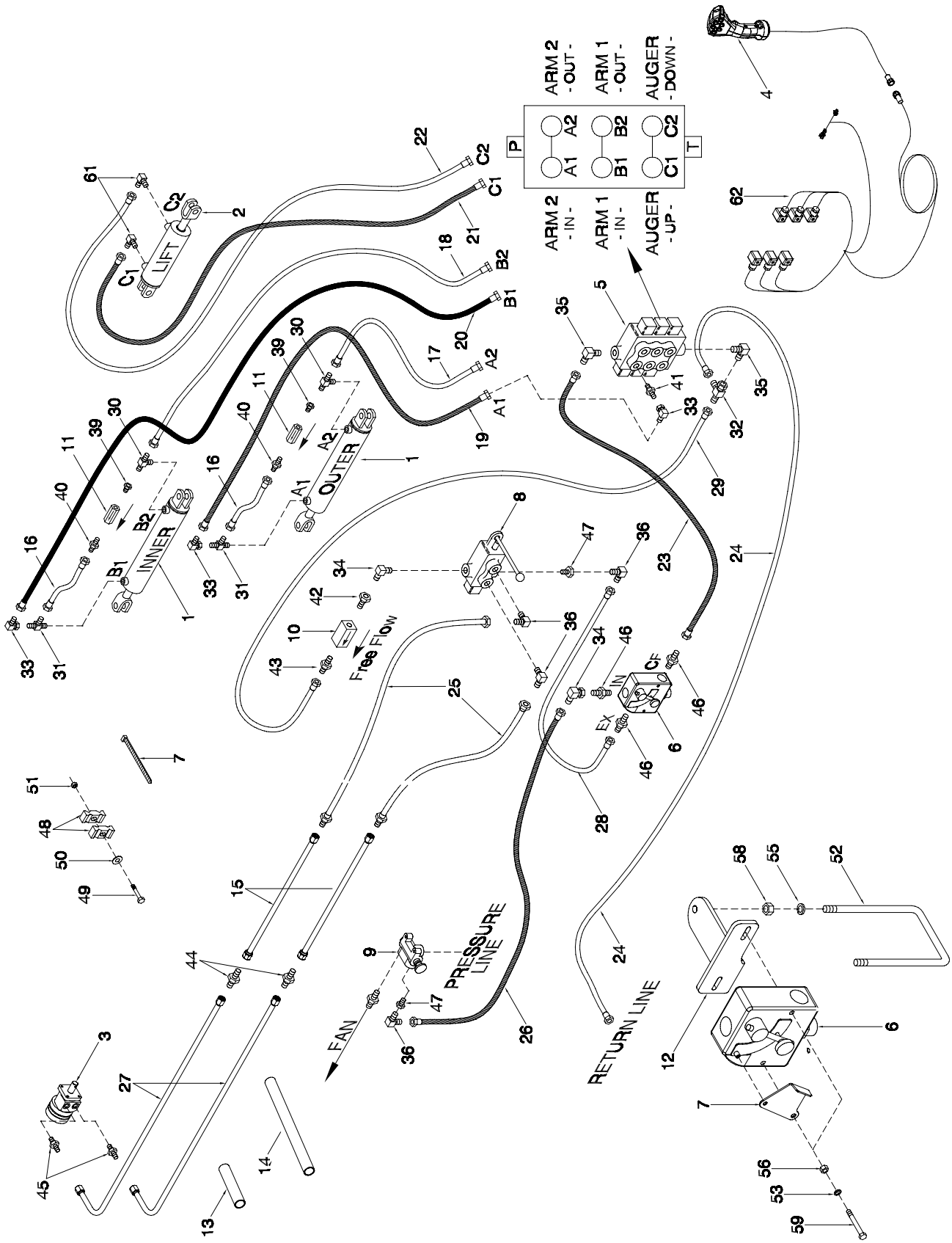
ARM 2 - OUT -
ARM 1 - OUT -
AUGER - DOWN -
ARM 2 - IN -
ARM 1 - IN -
AUGER - UP -
P
T
A1 A2
B1 B2
C1 C2
LIFT
OUTER
INNER
Free Flow
IN
EX
CF
FAN
PRESSURE LINE
RETURN LINE

Fan & Auger Drives - Auger with Hydraulic Assist Tow Behind

Item	Part No.	Description	Qty
1	C47188	Cylinder - Swing Arm	2
2	C47335	Cylinder - Lift Auger	1
3	N37047	Orbit Motor	1
		(Seal Kit # N16731 for motor serial numbers ending with -008 or -009 or -010)	
		(Seal Kit # N48041 for motor serial numbers ending with -012)	1
4	N47785	Joy Stick Controller - Solenoid Valve	1
5	N45370	Valve - Solenoid - Hydraulic Assist Auger	1
6	N47901	Valve - Flow Control	1
7	N47918	Adjustment Stop	1
8	N34495	Control Valve w/7/8-14 FORB x 1 1/16-12 FORB	1
9	N37514	Selector Valve (Located in FAN Hydraulic System)	1
10	N34494	Check Valve w/3/4 - 16 FORB	1
11	H18263	Check Valve - w/3/8-FNPT x 3/8-FNPT	2
12	N47324	Bracket - Flow Control Valve	1
13	N37401	Rubber Hose Cover - 2 ID x 12 Lg	1
14	N42083	Rubber Hose Cover - 2 ID x 36 Lg	1
15	C-4370	Oil Line - 5/8 x 128 Lg w/ 7/8-14 FJIC	2
16	C-4552	Hyd Hose - 1/4 x 24 Lg w/9/16-18 FJIC	2
17	C15349	Hyd Hose - 1/4 x 48 Lg w/9/16-18 FJIC	1
18	S39506	Hyd Hose - 1/4 x 66 Lg w/9/16-18 FJIC	1
19	S22406	Hyd Hose - 1/4 x 72 Lg w/9/16-18 FJIC	1
20	H18266	Hyd Hose - 1/4 x 80 Lg w/9/16-18 FJIC	1
21	F14658	Hyd Hose - 1/4 x 150 Lg w/9/16-18 FJIC	1
22	D17585	Hyd Hose - 1/4 x 176 Lg w/9/16-18 FJIC	1
23	N34366	Hyd Hose - 1/2 x 12 Lg w/7/8-14 FJIC	1
24	C-4468	Hyd Hose - 1/2 x 24 Lg w/7/8-14 FJIC	1
25	N42543	Hyd Hose - 1/2 x 39 Lg w/7/8-14 MJIC x 7/8-14 FJIC	2
26	C26344	Hyd Hose - 1/2 x 42 Lg w/7/8-14 FJIC	1
27	N36498	Oil Line - 5/8 x 104 Lg w/90 Degree Bend x 7/8-14 FJIC	2
28	C26336	Hyd Hose - 1/2 x 198 Lg w/7/8-14 FJIC	1
29	S29841	Hyd Hose - 1/2 x 222 Lg w/7/8-14 FJIC x 7/8-14 FJIC	1
30	N31908	Tee - (2) 9/16-18 MJIC x (1) 9/16-18 MORB	2
31	N47902	Tee - (1) 9/16-18 MORB x (2) 9/16-18 MJIC	2
32	H18746	Tee - Swivel - (2) 7/8-14 MJIC x (1) 7/8-14 FJIC	1
33	S29967	90 Elbow - Swivel - 9/16-18 FJIC x 9/16-18 MJIC	8
34	K-5806	90 Elbow - Swivel - 7/8-14 MJIC x 7/8-14 FJIC	1
35	C24585	90 Elbow - 7/8-14 MJIC x 3/4-16 MORB	2
36	C15318	90 Elbow - 7/8-14 MJIC x 7/8-14 MORB	4
37	N34644	90 Elbow - 3/4-16 MJIC x 1/16-12 MORB	1
38	D-4838	Nylon Tie Strap - 14 1/2 Lg	4
	S13336	Nylon Tie Strap - 24 Lg	3
39	N47798	Connector - 9/16-18 FJIC x 3/8 MNPT	2
40	C-4405	Connector - 9/16-18 MJIC x 3/8 MNPT	3
41	C15348	Connector - 9/16-18 MJIC x 3/4-16 MORB	4
42	N34503	Connector - 3/4-16 MORB x 3/4-16 FJIC	1
43	C14840	Connector - 7/8-14 MJIC x 3/4-16 MORB	1
44	C-4469	Connector - 7/8-14 MJIC	2
45	N36489	Connector - 7/8-14 MJIC x 7/8-14 MORB	2
46	N47903	Connector - 7/8-14 MJIC x 1 1/16-12 MORB	3
47	N34499	Connector - 1 1/16-12 MORB x 7/8-14 FORB	2
48	C-4698	Nylon Oil Line Clamp	8
49	W-479	Hex Bolt - 3/8 x 2 1/4 Lg	3
50	W-538	Flatwasher - 3/8	7
51	D-5279	Serrated Locknut - 3/8	3
52	N19723	U-Bolt - 3/8 x 4 1/16 x 6 15/16	1
53	W-521	Lockwasher - 1/4	4
54	W-522	Lockwasher - 5/16	3
55	W-523	Lockwasher - 3/8	5
56	W-512	Hex Nut - 1/4	4
57	W-513	Hex Nut - 5/16	3
58	W-514	Hex Nut - 3/8	5
59	C15319	Hex Bolt - 1/4 x 2 1/2 Lg	2
60	S-1302	Hex Bolt - 5/16 x 2 1/2 Lg	3
61	N16143	90 Elbow - 9/16-18 MJIC x 9/16-18 MORB	2
62	N47762	Auger Control Harness	1

Fan & Auger Drives
Conveyor with Hydraulic Assist Tow Behind - Prior to 2011

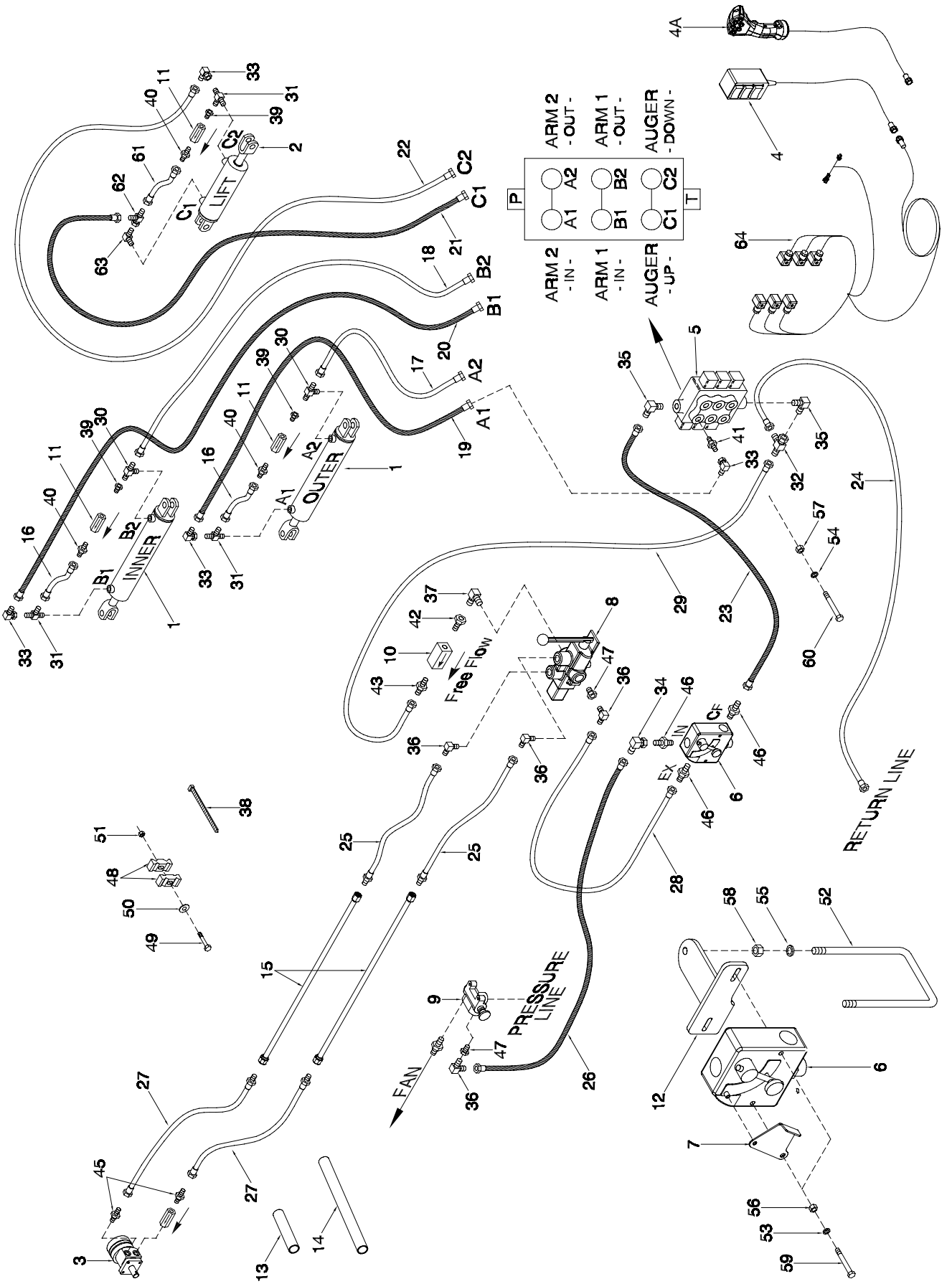

Fan & Auger Drives - Conveyor with Hydraulic Assist Tow Behind - Prior to 2011

Item	Part No.	Description	Qty
1	C47188	Cylinder - Swing Arm	2
2	C44745	Cylinder - Lift Conveyor	1
3	* * * * *	Orbit Motor	1
4	N45369	Box Controller - Solenoid Valve (Option A)	1
4A	N47785	Joy Stick Controller - Solenoid Valve (Option B)	1
5	N45370	Valve - Solenoid - Hydraulic Assist Auger	1
6	N47901	Valve - Flow Control	1
7	N47918	Adjustment Stop	1
8	N34495	Control Valve w/7/8-14 FORB x 1 1/16-12 FORB	1
9	N37514	Selector Valve (Located in FAN Hydraulic System)	1
10	N34494	Check Valve w/3/4 - 16 FORB	1
11	H18263	Check Valve - w/3/8-FNPT x 3/8-FNPT	3
12	N47324	Bracket - Flow Control Valve	1
13	N37401	Rubber Hose Cover - 2 ID x 12 Lg	1
14	N42083	Rubber Hose Cover - 2 ID x 36 Lg	1
15	C-4370	Oil Line - 5/8 x 128 Lg w/ 7/8-14 FJIC	2
16	C-4552	Hyd Hose - 1/4 x 24 Lg w/9/16-18 FJIC	2
17	C15349	Hyd Hose - 1/4 x 48 Lg w/9/16-18 FJIC	1
18	S39506	Hyd Hose - 1/4 x 66 Lg w/9/16-18 FJIC	1
19	S22406	Hyd Hose - 1/4 x 72 Lg w/9/16-18 FJIC	1
20	H18266	Hyd Hose - 1/4 x 80 Lg w/9/16-18 FJIC	1
21	F14658	Hyd Hose - 1/4 x 150 Lg w/9/16-18 FJIC	1
22	D17585	Hyd Hose - 1/4 x 176 Lg w/9/16-18 FJIC	1
23	N34366	Hyd Hose - 1/2 x 12 Lg w/7/8-14 FJIC	1
24	C-4468	Hyd Hose - 1/2 x 24 Lg w/7/8-14 FJIC	1
25	C-4385	Hyd Hose - 1/2 x 24 Lg w/7/8-14 MJIC x 7/8-14 FJIC	2
26	C26344	Hyd Hose - 1/2 x 42 Lg w/7/8-14 FJIC	1
27	C-4389	Hyd Hose - 1/2 x 60 Lg w/7/8-14 MJIC x 7/8-14 FJIC	2
28	C26336	Hyd Hose - 1/2 x 198 Lg w/7/8-14 FJIC	1
29	S29841	Hyd Hose - 1/2 x 222 Lg w/7/8-14 FJIC x 7/8-14 FJIC	1
30	N31908	Tee - (2) 9/16-18 MJIC x (1) 9/16-18 MORB	2
31	N47902	Tee - (1) 9/16-18 MORB x (2) 9/16-18 MJIC	4
32	H18746	Tee - Swivel - (2) 7/8-14 MJIC x (1) 7/8-14 FJIC	1
33	S29967	90 Elbow - Swivel - 9/16-18 FJIC x 9/16-18 MJIC	10
34	K-5806	90 Elbow - Swivel - 7/8-14 MJIC x 7/8-14 FJIC	1
35	C24585	90 Elbow - 7/8-14 MJIC x 3/4-16 MORB	2
36	C15318	90 Elbow - 7/8-14 MJIC x 7/8-14 MORB	4
37	N34644	90 Elbow - 3/4-16 MJIC x 1/16-12 MORB	1
38	D-4838	Nylon Tie Strap - 14 1/2 Lg	4
	S13336	Nylon Tie Strap - 24 Lg	3
39	N47798	Connector - 9/16-18 FJIC x 3/8 MNPT	3
40	C-4405	Connector - 9/16-18 MJIC x 3/8 MNPT	3
41	C15348	Connector - 9/16-18 MJIC x 3/4-16 MORB	4
42	N34503	Connector - 3/4-16 MORB x 3/4-16 FJIC	1
43	C14840	Connector - 7/8-14 MJIC x 3/4-16 MORB	1
44	* * * * *		
45	C-4399	Connector - 7/8-14 MJIC x 1/2 MNPT	2
46	N47903	Connector - 7/8-14 MJIC x 1 1/16-12 MORB	3
47	N34499	Connector - 1 1/16-12 MORB x 7/8-14 FORB	2
48	C-4698	Nylon Oil Line Clamp	8
49	W-479	Hex Bolt - 3/8 x 2 1/4 Lg	3
50	W-538	Flatwasher - 3/8	7
51	D-5279	Serrated Locknut - 3/8	3
52	N19723	U-Bolt - 3/8 x 4 1/16 x 6 15/16	1
53	W-521	Lockwasher - 1/4	4
54	W-522	Lockwasher - 5/16	3
55	W-523	Lockwasher - 3/8	5
56	W-512	Hex Nut - 1/4	4
57	W-513	Hex Nut - 5/16	3
58	W-514	Hex Nut - 3/8	5
59	C15319	Hex Bolt - 1/4 x 2 1/2 Lg	2
60	S-1302	Hex Bolt - 5/16 x 2 1/2 Lg	3
61	C-4467	Hyd Hose - 1/4 x 16 Lg w/9/16-18 FJIC	1
62	C-4403	Tee- (1) 9/16-18 FJIC x (2) 9/16-18 MJIC	1
63	N16143	90 Elbow - 9/16-18 MORB x 9/16-18 MJIC	1
64	N47762	Auger Control Harness	1

Fan & Auger Drives
Conveyor with Hydraulic Assist Tow Behind - 2011 to 2012

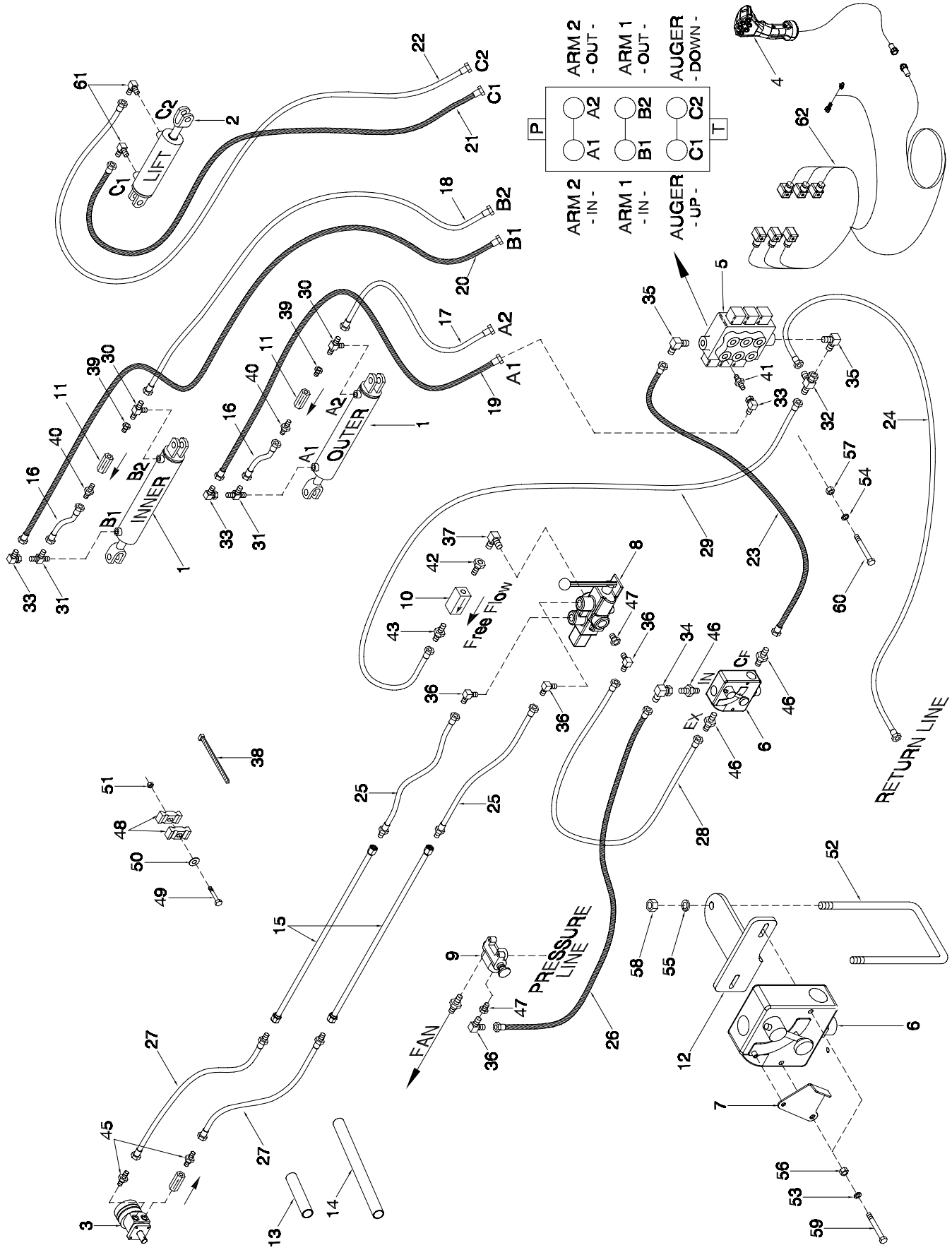

Fan & Auger Drives - Conveyor with Hydraulic Assist Tow Behind - 2011 to 2012

Item	Part No.	Description	Qty
1	C47188	Cylinder - Swing Arm	2
2	C44745	Cylinder - Lift Conveyor	1
3	* * * * *	Orbit Motor	1
4	N45369	Box Controller - Solenoid Valve (Option A)	1
4A	N47785	Joy Stick Controller - Solenoid Valve (Option B)	1
5	N45370	Valve - Solenoid - Hydraulic Assist Auger	1
6	N47901	Valve - Flow Control	1
7	N47918	Adjustment Stop	1
8	N34495	Control Valve w/7/8-14 FORB x 1 1/16-12 FORB	1
9	N37514	Selector Valve (Located in FAN Hydraulic System)	1
10	N34494	Check Valve w/3/4 - 16 FORB	1
11	H18263	Check Valve - w/3/8-FNPT x 3/8-FNPT	2
12	N47324	Bracket - Flow Control Valve	1
13	N37401	Rubber Hose Cover - 2 ID x 12 Lg	1
14	N42083	Rubber Hose Cover - 2 ID x 36 Lg	1
15	C-4370	Oil Line - 5/8 x 128 Lg w/ 7/8-14 FJIC	2
16	C-4552	Hyd Hose - 1/4 x 24 Lg w/9/16-18 FJIC	2
17	C15349	Hyd Hose - 1/4 x 48 Lg w/9/16-18 FJIC	1
18	S39506	Hyd Hose - 1/4 x 66 Lg w/9/16-18 FJIC	1
19	S22406	Hyd Hose - 1/4 x 72 Lg w/9/16-18 FJIC	1
20	H18266	Hyd Hose - 1/4 x 80 Lg w/9/16-18 FJIC	1
21	F14658	Hyd Hose - 1/4 x 150 Lg w/9/16-18 FJIC	1
22	D17585	Hyd Hose - 1/4 x 176 Lg w/9/16-18 FJIC	1
23	N34366	Hyd Hose - 1/2 x 12 Lg w/7/8-14 FJIC	1
24	C-4468	Hyd Hose - 1/2 x 24 Lg w/7/8-14 FJIC	1
25	C-4385	Hyd Hose - 1/2 x 24 Lg w/7/8-14 MJIC x 7/8-14 FJIC	2
26	C26344	Hyd Hose - 1/2 x 42 Lg w/7/8-14 FJIC	1
27	C15310	Hyd Hose - 1/2 x 72 Lg w/7/8-14 MJIC x 7/8-14 FJIC	2
28	C26336	Hyd Hose - 1/2 x 198 Lg w/7/8-14 FJIC	1
29	S29841	Hyd Hose - 1/2 x 222 Lg w/7/8-14 FJIC x 7/8-14 FJIC	1
30	N31908	Tee - (2) 9/16-18 MJIC x (1) 9/16-18 MORB	2
31	N47902	Tee - (1) 9/16-18 MORB x (2) 9/16-18 MJIC	2
32	H18746	Tee - Swivel - (2) 7/8-14 MJIC x (1) 7/8-14 FJIC	1
33	S29967	90 Elbow - Swivel - 9/16-18 FJIC x 9/16-18 MJIC	8
34	K-5806	90 Elbow - Swivel - 7/8-14 MJIC x 7/8-14 FJIC	1
35	C24585	90 Elbow - 7/8-14 MJIC x 3/4-16 MORB	2
36	C15318	90 Elbow - 7/8-14 MJIC x 7/8-14 MORB	4
37	N34644	90 Elbow - 3/4-16 MJIC x 1/16-12 MORB	1
38	D-4838	Nylon Tie Strap - 14 1/2 Lg	4
	S13336	Nylon Tie Strap - 24 Lg	3
39	N47798	Connector - 9/16-18 FJIC x 3/8 MNPT	2
40	C-4405	Connector - 9/16-18 MJIC x 3/8 MNPT	2
41	C15348	Connector - 9/16-18 MJIC x 3/4-16 MORB	6
42	N34503	Connector - 3/4-16 MORB x 3/4-16 FJIC	1
43	C14840	Connector - 7/8-14 MJIC x 3/4-16 MORB	1
44	* * * * *		
45	C-4399	Connector - 7/8-14 MJIC x 1/2 MNPT	2
46	N47903	Connector - 7/8-14 MJIC x 1 1/16-12 MORB	3
47	N34499	Connector - 1 1/16-12 MORB x 7/8-14 FORB	2
48	C-4698	Nylon Oil Line Clamp	8
49	W-479	Hex Bolt - 3/8 x 2 1/4 Lg	3
50	W-538	Flatwasher - 3/8	7
51	D-5279	Serrated Locknut - 3/8	3
52	N19723	U-Bolt - 3/8 x 4 1/16 x 6 15/16	1
53	W-521	Lockwasher - 1/4	4
54	W-522	Lockwasher - 5/16	3
55	W-523	Lockwasher - 3/8	5
56	W-512	Hex Nut - 1/4	4
57	W-513	Hex Nut - 5/16	3
58	W-514	Hex Nut - 3/8	5
59	C15319	Hex Bolt - 1/4 x 2 1/2 Lg	2
60	S-1302	Hex Bolt - 5/16 x 2 1/2 Lg	3
61	N16143	90 Elbow - 9/16-18 MJIC x 9/16-18 MORB	2
62	N47762	Auger Control Harness	1

Fan & Auger Hyrdaulics
Tow Between Hydraulic Drive w/Auger

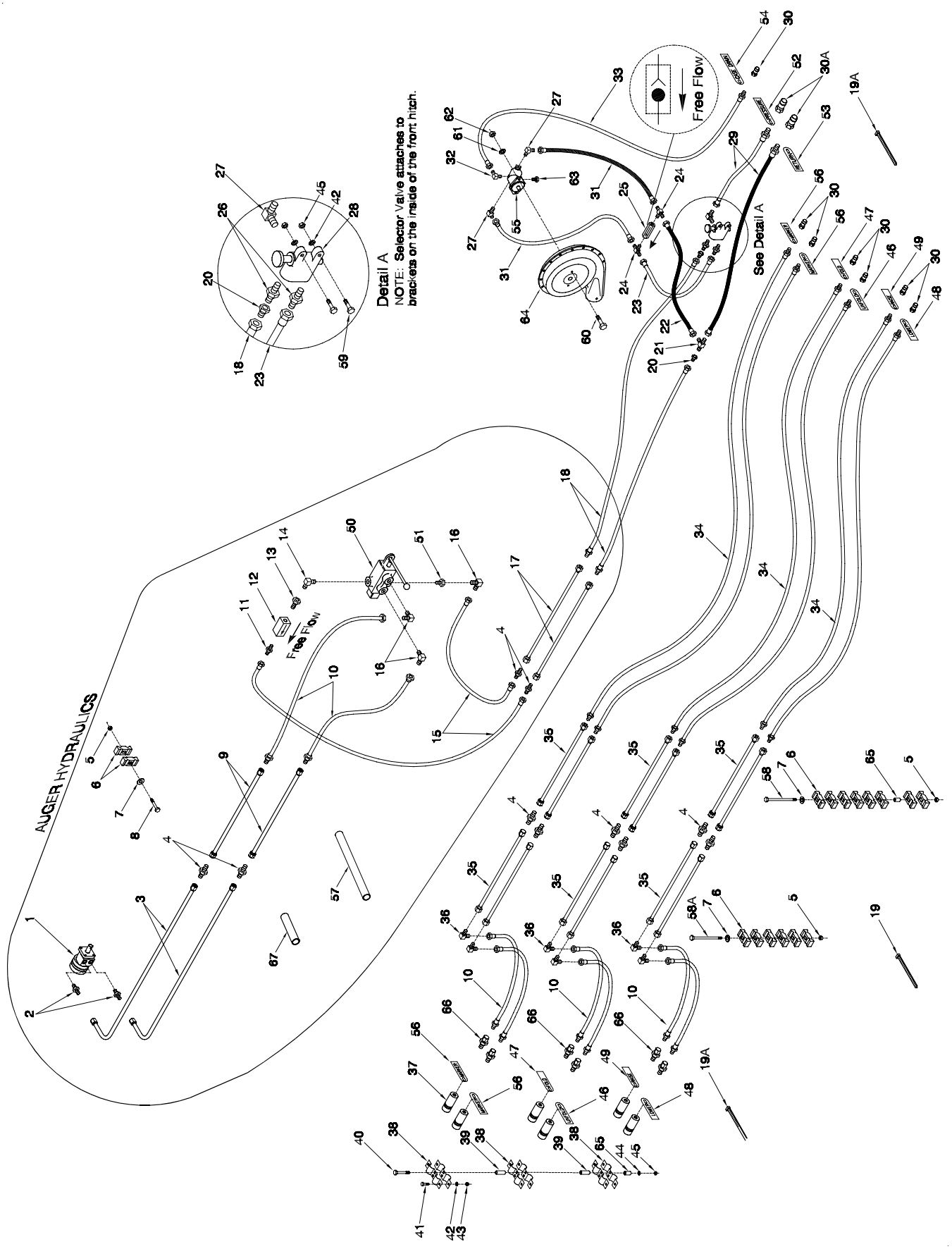

Fan & Auger Hyrdaulics - Tow Between Hydraulic Drive w/Auger

Item	Part No.	Description	Qty
1	N36627	Orbit Motor	1
	N16731	Seal Kit for N36627	1
	N25319	Shaft for N36627	1
2	N36489	Connector - 7/8-14 MJIC x 7/8-14 MORB	2
3	N36498	Oil Line - 5/8 x 104 Lg w/90 Degree Bend x 7/8-14 FJIC	2
4	C-4469	Connector - 7/8-14 MJIC	10
5	S27987	Flange Locknut - 3/8 w/Center Lock	7
6	C-4698	Nylon Clamp - Oil Line	34
7	W-538	Washer - 3/8	7
8	W-479	Hex Bolt - 3/8 x 2 1/4 Lg	3
9	C-4363	Oil Line - 5/8 x 38 Lg w/ 7/8-14 FJIC	2
10	C-4387	Hyd Hose - 1/2 x 36 Lg w/7/8-14 MJIC x 7/8-14 FJIC	8
11	C14840	Connector - 7/8-14 MJIC x 3/4-16 MORB	1
12	N34494	Check Valve w/3/4 - 16 FORB	1
13	N34503	Connector - 3/4-16 MORB x 3/4-16 FJIC	1
14	N34644	90 Elbow - 3/4-16 MJIC x 1 1/16-12 MORB	1
15	C26336	Hyd Hose - 1/2 x 198 w/ 7/8-14 FJIC	2
16	C15318	90 Elbow - 7/8-14 MJIC x 7/8-14 MORB	3
17	C-4366	Oil Line - 5/8 x 74 Lg w/ 7/8-14 FJIC	2
18	F-5679	Hyd Hose - 1/2 x 96 Lg w/7/8-14 FJIC x 7/8-14 FJIC	2
19	D-4838	Nylon Tie Strap -14 1/2 Lg	15
19A	D-4951	Nylon Tie Strap -7 3/8 Lg	15
20	N19337	Connector - 7/8-14 MJIC x 1 1/16-12 FJIC	2
21	N19549	Tee - (3) 1 1/16-12 MJIC	1
22	N16916	Hyd Hose - 3/4 x 22 w/1 1/16-12 FJIC	1
23	N25644	Hyd Hose - 3/4 x 35 w/1 1/16-12 FJIC	1
24	N16388	Tee - (2) 1 1/16-12 MJIC x (1) 1 1/16-12 MORB	2
25	N16399	Check Valve - 7 PSI - 1 1/16-12 FORB	1
26	N15990	Connector 1-1/16-12 MJIC x 1-1/16-12 MORB	2
27	N16359	90 Elbow - 1 1/16-12 MJIC x 1 1/16-12 MORB	3
28	N34506	Selector Valve w/1 1/16-12 FORB	1
29	N37038	Hyd Hose - 3/4 x 84 Lg w/ 1 1/16-12 MORB x 1 1/16-12 FJIC	2
30	N34498	Male Pioneer Tip - 7/8-14 FORB	7
30A	N37914	3/4 Male Tip - 1 1/16-12 FORB	2
31	N15991	Hyd Hose - 3/4 x 12 Lg w/1 1/16-12 FJIC	2
32	N19578	45 Elbow - 9/16-18 MJIC x 9/16-18 MORB	1
33	N37404	Hyd Hose - 3/8 x 152 w/ 7/8-14 MORB X 9/16-18 FJIC	1
34	N37403	Hyd Hose - 1/2 x 192 Lg - 7/8-14 MJIC x 7/8-14 MORB	6
35	N37348	Oil Line - 5/8 x 84 Lg w/ 7/8-14 FJIC	12
36	H24393	90 Elbow - 7/8-14 MJIC	6
37	N34488	Pioneer Coupler - 7/8-14 FORB	6
38	N16608	Coupler Clamp - Female Pioneer	6
39	N19458	Spacer Bushing - 0.540 OD x 2	6
40	S13337	Hex Bolt - 5/16 x 6 Lg	2
41	W-469	Hex Bolt - 1/4 x 3/4 Lg	12
42	W-521	Lockwasher - 1/4	6
43	W-512	Hex Nut - 1/4 x 3/4	6
44	W-522	Lockwasher - 5/16	4
45	W-513	Hex Nut - 5/16	4
46	S37661	Tag - Hose ID - Wing Lift - UNFOLD	2
47	S37662	Tag - Hose ID - Wing Lift - FOLD	2
48	S37663	Tag - Hose ID - Depth Control - LOWER	2
49	S37664	Tag - Hose ID - Depth Control - RAISE	2

Fan & Auger Hyrdaulics - Tow Between Hydraulic Drive w/Auger

Item	Part No.	Description	Qty
50	N34495	Control Valve w/7/8-14 FORB x 1 1/16-12 FORB	1
	N31605	Seal Kit for N34495	1
	N24595	Handle for N34495	1
51	N34499	Connector - 1 1/16-12 MORB x 7/8-14 FORB	1
52	N34576	Tag - Hose ID - Tank - Fan/Auger - PRESSURE	1
53	N34577	Tag - Hose ID - Tank - Fan/Auger - RETURN	1
54	N34578	Tag - Hose ID - Tank Fan/Auger - CASE DRAIN	1
55	* * * * *	Hydraulic Motor - Rexroth - (See Section 7)	1
56	N34364	Tag - Hose ID - Wheel Marker	4
57	N42083	Rubber Cover Hose - 2 ID x 36	1
58	N19678	Hex Bolt - 3/8 x 7 Lg	2
58A	C-3918	Hex Bolt - 3/8 x 5 Lg	2
59	S-1303	Hex Bolt - 5/16 x 2 Lg	2
60	S-1189	Hex Bolt - 1/2 x 1 3/4 Lg	2
61	W-525	Lockwasher - 1/2	2
62	W-516	Hex Nut - 1/2	2
63	N16621	Plug - 9/16-18 MORB	1
64	* * * * *	Fan - (See Section 7)	1
65	N15559	Spacer Bushing - 0.385 ID x 5/8 OD x 1 Lg	4
66	N34620	Connector - Swivel - 7/8-14 MORB	6
67	N37401	Rubber Cover Hose - 2 ID x 12	1
	N19023	Decal - Danger “HOT” (Not Shown)	1
	N36263	Decal - Warning “BURN HAZARD” (Not Shown)	1
	N36443	Decal - “LEVER POSITION” (Not Shown)	1
	N19031	Decal - “AUGER / FAN” (Not Shown)	1

Fan & Auger Drives
8435XL, 8630XL & 8650XL Tow Between Hydraulic Drive w/Auger

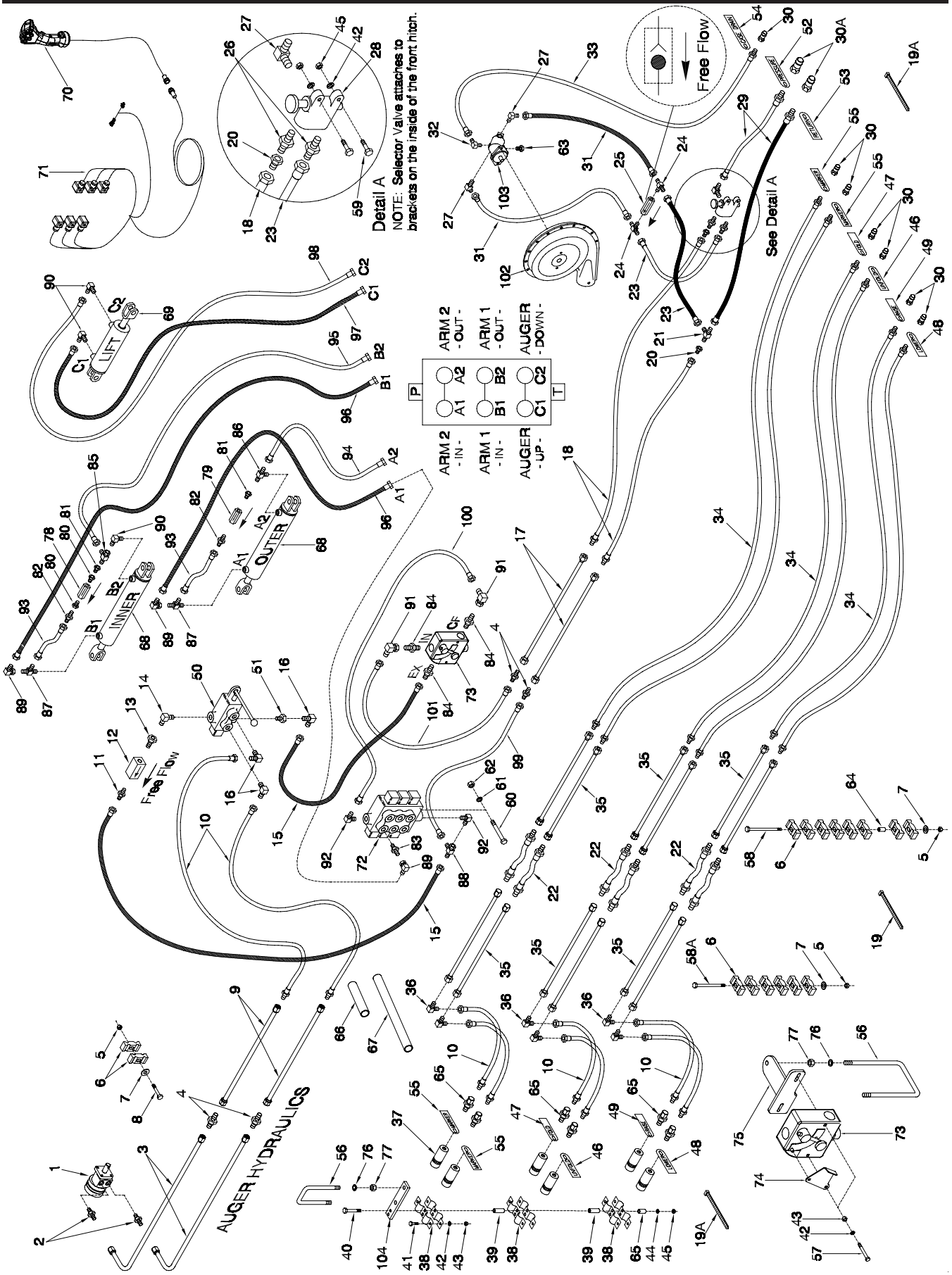

Fan & Auger Drives - 8435XL, 8630XL & 8650XL Tow Between

Item	Part No.	Description	Qty
1	N37047	Orbit Motor (Seal Kit # N48041)	1
2	N36489	Connector - 7/8-14 MJIC x 7/8-14 MORB	2
3	N36498	Oil Line - 5/8 x 104 Lg w/90 Degree Bend x 7/8-14 FJIC	2
4	C-4469	Connector - 7/8-14 MJIC	10
5	S27987	Flange Locknut - 3/8 w/Center Lock	7
6	C-4698	Nylon Clamp - Oil Line	34
7	W-538	Washer - 3/8	7
8	W-479	Hex Bolt - 3/8 x 2 1/4 Lg	3
9	C-4363	Oil Line - 5/8 x 38 Lg w/ 7/8-14 FJIC	2
10	C-4387	Hyd Hose - 1/2 x 36 Lg w/7/8-14 MJIC x 7/8-14 FJIC	8
11	C14840	Connector - 7/8-14 MJIC x 3/4-16 MORB	1
12	N34494	Check Valve w/3/4 - 16 FORB	1
13	N34503	Connector - 3/4-16 MORB x 3/4-16 FJIC	1
14	N34644	90 Elbow - 3/4-16 MJIC x 1 1/16-12 MORB	1
15	S39538	Hyd Hose - 1/2 x 258 w/ 7/8-14 FJIC	2
16	C15318	90 Elbow - 7/8-14 MJIC x 7/8-14 MORB	3
17	C-4366	Oil Line - 5/8 x 74 Lg w/ 7/8-14 FJIC	2
18	F-5679	Hyd Hose - 1/2 x 96 Lg w/7/8-14 FJIC x 7/8-14 FJIC	2
19	D-4838	Nylon Tie Strap -14 1/2 Lg	18
19A	D-4951	Nylon Tie Strap -7 3/8 Lg	15
	S13336	Nylon Tie Strap - 24 Lg	3
20	N19337	Connector - 7/8-14 MJIC x 1 1/16-12 FJIC	2
21	N19549	Tee - (3) 1 1/16-12 MJIC	1
22	C-4386	Hyd Hose - 1/2 x 36 Lg w/7/8-14 MJIC x 7/8-14 FJIC	6
23	N25644	Hyd Hose - 3/4 x 35 w/1 1/16-12 FJIC	1
24	N16388	Tee - (2) 1 1/16-12 MJIC x (1) 1 1/16-12 MORB	2
25	N16399	Check Valve - 7 PSI - 1 1/16-12 FORB	1
26	N15990	Connector - 1 1/16-12 MJIC x 1 1/16-12 MORB	2
27	N16359	90 Elbow - 1 1/16-12 MJIC x 1 1/16-12 MORB	3
28	N34506	Selector Valve w/1 1/16-12 FORB	1
29	N37038	Hyd Hose - 3/4 x 84 Lg w/ 1 1/16-12 MORB x 1 1/16-12 FJIC	2
30	N34498	Male Pioneer Tip - 7/8-14 FORB	7
30A	N37914	3/4 Male Tip - 1 1/16-12 FORB	2
31	N37900	Hyd Hose - 3/4 x 18 Lg w/1 1/16-12 FJIC	2
32	N19578	45 Elbow - 9/16-18 MJIC x 9/16-18 MORB	1
33	N37404	Hyd Hose - 3/8 x 152 w/ 7/8-14 MORB X 9/16-18 FJIC	1
34	N37403	Hyd Hose - 1/2 x 192 Lg - 7/8-14 MJIC x 7/8-14 MORB	6
35	N37348	Oil Line - 5/8 x 84 Lg w/ 7/8-14 FJIC	12
36	H24393	90 Elbow - 7/8-14 MJIC	6
37	N34488	Pioneer Coupler - 7/8-14 FORB	6
38	N16608	Coupler Clamp - Female Pioneer	6
39	N19458	Spacer Bushing - 0.540 OD x 2	6
39A	N19155	Spacer Bushing - 0.540 OD x 1/2	2
40	S13337	Hex Bolt - 5/16 x 6 Lg	2
41	W-469	Hex Bolt - 1/4 x 3/4 Lg	12
42	W-521	Lockwasher - 1/4	8
43	W-512	Hex Nut - 1/4	8
44	W-522	Lockwasher - 5/16	4
45	W-513	Hex Nut - 5/16	4
46	S37661	Tag - Hose ID - Wing Lift - UNFOLD	2
47	S37662	Tag - Hose ID - Wing Lift - FOLD	2
48	S37663	Tag - Hose ID - Depth Control - LOWER	2
49	S37664	Tag - Hose ID - Depth Control - RAISE	2
50	N34495	Control Valve w/7/8-14 FORB x 1 1/16-12 FORB	1
	N31605	Seal Kit for N34495	1
	N24595	Handle for N34495	1
51	N34499	Connector - 1 1/16-12 MORB x 7/8-14 FORB	1
52	N34576	Tag - Hose ID - Tank - Fan/Auger - PRESSURE	1
53	N34577	Tag - Hose ID - Tank - Fan/Auger - RETURN	1
54	N34578	Tag - Hose ID - Tank Fan/Auger - CASE DRAIN	1

Fan & Auger Drives - 8435XL, 8630XL & 8650XL Tow Between

Item	Part No.	Description	Qty
56	N19723	U-Bolt - 3/8 x 4 1/16 x 6 15/16	2
57	H-4696	Hex Bolt - 1/4 x 3 Lg	2
58	N21658	Hex Bolt - 3/8 x 8 Lg	2
58A	C-3918	Hex Bolt - 3/8 x 5 Lg	2
59	S-1303	Hex Bolt - 5/16 x 2 Lg	2
60	S-1302	Hex Bolt - 5/16 x 2 1/2 Lg	3
61	W-522	Lockwasher - 5/16	3
62	W-513	Hex Nut - 5/16	3
63	N16621	Plug - 9/16-18 MORB	1
64	N15559	Spacer Bushing - 0.385 ID x 5/8 OD x 1 Lg	4
65	N34620	Connector - Swivel - 7/8-14 MORB	6
66	N37401	Rubber Cover Hose - 2 ID x 12	1
67	N42083	Rubber Cover Hose - 2 ID x 36	1
68	C47188	Cylinder - Swing Arm	2
69	C47335	Cylinder - Lift Auger	1
70	N47785	Joy Stick Controller - Solenoid Valve	1
71	N47762	Auger Control Harness	1
72	N45370	Valve - Solenoid - Hydraulic Assist Auger	1
73	N47901	Valve - Flow Control	1
74	N47918	Adjustment Stop	1
75	N47324	Bracket - Flow Control Valve	1
76	W-523	Lockwasher - 3/8	7
77	W-514	Hex Nut - 3/8	7
78	H-5545	Check Valve - w/Connector - 1/2 FNPT x 1/2 FNPT	1
79	H18263	Check Valve - w/3/8-FNPT x 3/8-FNPT	1
80	C-719	Connector - 1/2 MNPT x 3/8 FNPT	2
81	N47798	Connector - 9/16-18 FJIC x 3/8 MNPT	2
82	C-4405	Connector - 9/16-18 MJIC x 3/8 MNPT	3
83	C15348	Connector - 9/16-18 MJIC x 3/4-16 MORB	6
84	N47903	Connector - 7/8-14 MJIC x 1 1/16-12 MORB	3
85	C-4403	Tee - (2) 9/16-18 MJIC x (1) 9/16-18 FJIC	1
86	N31908	Tee - (2) 9/16-18 MJIC x (1) 9/16-18 MORB	1
87	N47902	Tee - (1) 9/16-18 MORB x (2) 9/16-18 MJIC	2
88	H18746	Tee - Swivel - (2) 7/8-14 MJIC x (1) 7/8-14 FJIC	1
89	S29967	90 Elbow - Swivel - 9/16-18 FJIC x 9/16-18 MJIC	8
90	N16143	90 Elbow - 9/16-18 MJIC x 9/16-18 MORB	3
91	K-5806	90 Elbow - Swivel - 7/8-14 MJIC x 7/8-14 FJIC	2
92	C24585	90 Elbow - 7/8-14 MJIC x 3/4-16 MORB	2
93	C-4552	Hyd Hose - 1/4 x 24 Lg w/9/16-18 FJIC	2
94	C16652	Hyd Hose - 1/4 x 60 Lg w/9/16-18 FJIC	1
95	S39506	Hyd Hose - 1/4 x 66 Lg w/9/16-18 FJIC	1
96	H18266	Hyd Hose - 1/4 x 80 Lg w/9/16-18 FJIC	2
97	D17845	Hyd Hose - 1/4 x 198 Lg w/9/16-18 FJIC	1
98	C26347	Hyd Hose - 1/4 x 216 Lg w/9/16-18 FJIC	1
99	C-4468	Hyd Hose - 1/2 x 24 Lg w/7/8-14 FJIC	1
100	C-4404	Hyd Hose - 1/2 x 36 Lg w/7/8-14 FJIC	1
101	C26344	Hyd Hose - 1/2 x 42 Lg w/7/8-14 FJIC	1
102	* * * * *	Fan - (See Section 7)	1
103	* * * * *	Hydraulic Motor - Rexroth - (See Section 7)	1
104	N49676	Mounting Plate	1
	N19023	Decal - Danger “HOT” (Not Shown)	1
	N36263	Decal - Warning “BURN HAZARD” (Not Shown)	1
	N36443	Decal - “LEVER POSITION” (Not Shown)	1
	N19031	Decal - “AUGER / FAN” (Not Shown)	1

Fan & Conveyor Drives
8435XL, 8630XL & 8650XL Tow Between Hydraulic Drive w/Conveyor

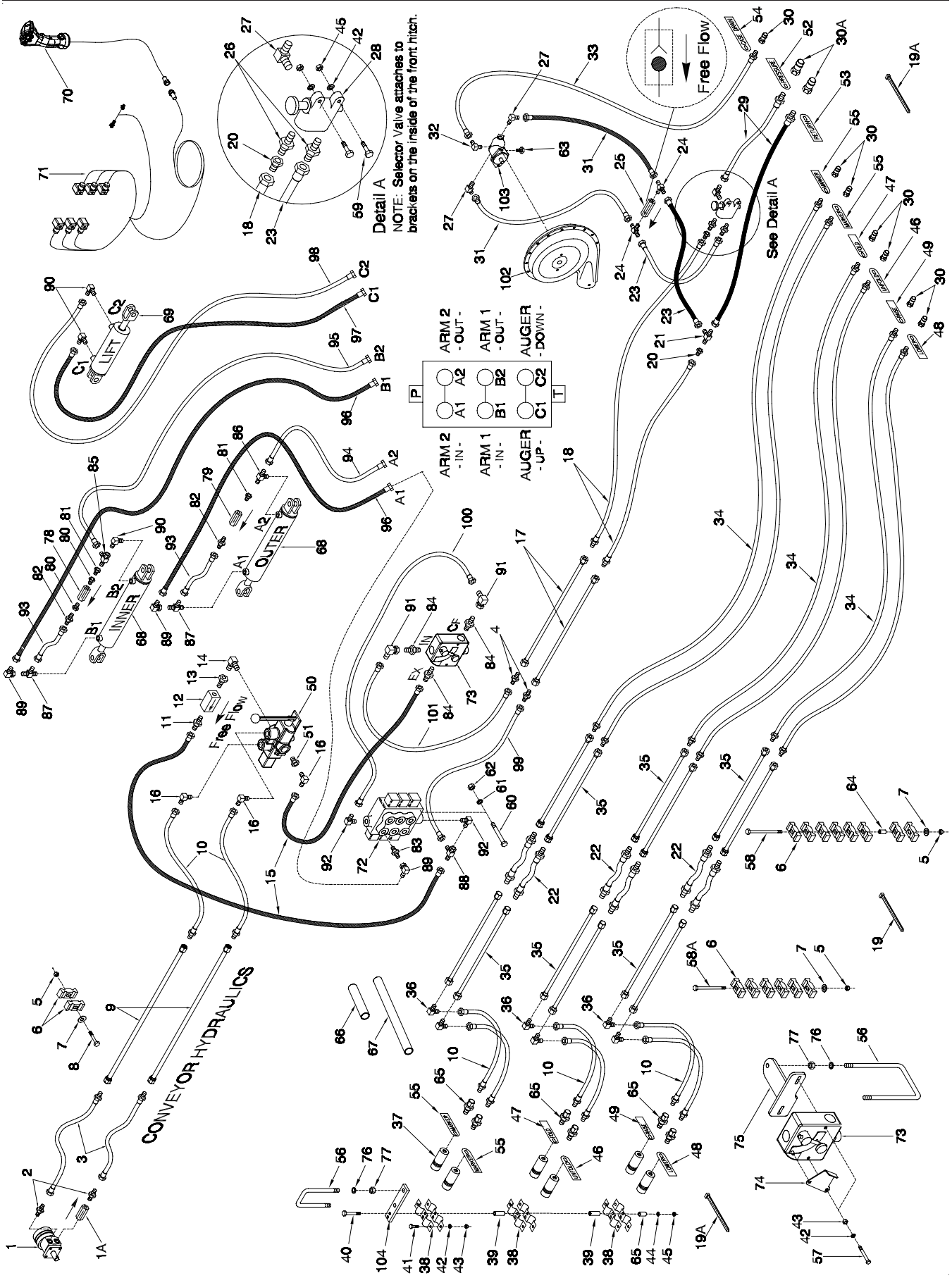

Fan & Conveyor Drives - 8435XL, 8630XL & 8650XL Tow Between

Item	Part No.	Description	Qty
1	N49490	Orbit Motor	1
1A	N49489	Check Valve	1
2	C-4399	Connector - 7/8-14 MJIC x 1/2 MNPT	2
3	C15310	Hyd Hose - 1/2 x 72 Lg w/7/8-14 MJIC x 7/8-14 FJIC	2
4	C-4469	Connector - 7/8-14 MJIC	2
5	S27987	Flange Locknut - 3/8 w/Center Lock	7
6	C-4698	Nylon Clamp - Oil Line	34
7	W-538	Washer - 3/8	7
8	W-479	Hex Bolt - 3/8 x 2 1/4 Lg	3
9	C-4370	Oil Line - 5/8 x 128 Lg w/ 7/8-14 FJIC	2
10	C-4385	Hyd Hose - 1/2 x 24 Lg w/7/8-14 MJIC x 7/8-14 FJIC	2
11	C14840	Connector - 7/8-14 MJIC x 3/4-16 MORB	1
12	N34494	Check Valve w/3/4 - 16 FORB	1
13	N34503	Connector - 3/4-16 MORB x 3/4-16 FJIC	1
14	N34644	90 Elbow - 3/4-16 MJIC x 1 1/16-12 MORB	1
15	S39538	Hyd Hose - 1/2 x 258 w/ 7/8-14 FJIC	2
16	C15318	90 Elbow - 7/8-14 MJIC x 7/8-14 MORB	3
17	C-4366	Oil Line - 5/8 x 74 Lg w/ 7/8-14 FJIC	2
18	F-5679	Hyd Hose - 1/2 x 96 Lg w/7/8-14 FJIC x 7/8-14 FJIC	2
19	D-4838	Nylon Tie Strap -14 1/2 Lg	18
19A	D-4951	Nylon Tie Strap -7 3/8 Lg	15
	S13336	Nylon Tie Strap - 24 Lg	3
20	N19337	Connector - 7/8-14 MJIC x 1 1/16-12 FJIC	2
21	N19549	Tee - (3) 1 1/16-12 MJIC	1
22	C-4386	Hyd Hose - 1/2 x 36 Lg w/7/8-14 MJIC x 7/8-14 FJIC	6
23	N25644	Hyd Hose - 3/4 x 35 w/1 1/16-12 FJIC	1
24	N16388	Tee - (2) 1 1/16-12 MJIC x (1) 1 1/16-12 MORB	2
25	N16399	Check Valve - 7 PSI - 1 1/16-12 FORB	1
26	N15990	Connector - 1 1/16-12 MJIC x 1 1/16-12 MORB	2
27	N16359	90 Elbow - 1 1/16-12 MJIC x 1 1/16-12 MORB	3
28	N34506	Selector Valve w/1 1/16-12 FORB	1
29	N37038	Hyd Hose - 3/4 x 84 Lg w/ 1 1/16-12 MORB x 1 1/16-12 FJIC	2
30	N34498	Male Pioneer Tip - 7/8-14 FORB	7
30A	N37914	3/4 Male Tip - 1 1/16-12 FORB	2
31	N37900	Hyd Hose - 3/4 x 18 Lg w/1 1/16-12 FJIC	2
32	N19578	45 Elbow - 9/16-18 MJIC x 9/16-18 MORB	1
33	N37404	Hyd Hose - 3/8 x 152 w/ 7/8-14 MORB X 9/16-18 FJIC	1
34	N37403	Hyd Hose - 1/2 x 192 Lg - 7/8-14 MJIC x 7/8-14 MORB	6
35	N37348	Oil Line - 5/8 x 84 Lg w/ 7/8-14 FJIC	12
36	H24393	90 Elbow - 7/8-14 MJIC	6
37	N34488	Pioneer Coupler - 7/8-14 FORB	6
38	N16608	Coupler Clamp - Female Pioneer	6
39	N19458	Spacer Bushing - 0.540 OD x 2	6
40	S13337	Hex Bolt - 5/16 x 6 Lg	2
41	W-469	Hex Bolt - 1/4 x 3/4 Lg	12
42	W-521	Lockwasher - 1/4	8
43	W-512	Hex Nut - 1/4	8
44	W-522	Lockwasher - 5/16	4
45	W-513	Hex Nut - 5/16	4
46	S37661	Tag - Hose ID - Wing Lift - UNFOLD	2
47	S37662	Tag - Hose ID - Wing Lift - FOLD	2
48	S37663	Tag - Hose ID - Depth Control - LOWER	2
49	S37664	Tag - Hose ID - Depth Control - RAISE	2
50	N34495	Control Valve w/7/8-14 FORB x 1 1/16-12 FORB (Seal Kit N31605) (Handle N24595)	1
51	N34499	Connector - 1 1/16-12 MORB x 7/8-14 FORB	1
52	N34576	Tag - Hose ID - Tank - Fan/Auger - PRESSURE	1
53	N34577	Tag - Hose ID - Tank - Fan/Auger - RETURN	1
54	N34578	Tag - Hose ID - Tank Fan/Auger - CASE DRAIN	1
55	N34364	Tag - Hose ID - Wheel Marker	4

Fan & Conveyor Drives - 8435XL, 8630XL & 8650XL Tow Between

Item	Part No.	Description	Qty
56	N19723	U-Bolt - 3/8 x 4 1/16 x 6 15/16	2
57	H-4696	Hex Bolt - 1/4 x 3 Lg	2
58	N21658	Hex Bolt - 3/8 x 8 Lg	2
58A	C-3918	Hex Bolt - 3/8 x 5 Lg	2
59	S-1303	Hex Bolt - 5/16 x 2 Lg	2
60	S-1302	Hex Bolt - 5/16 x 2 1/2 Lg	3
61	W-522	Lockwasher - 5/16	3
62	W-513	Hex Nut - 5/16	3
63	N16621	Plug - 9/16-18 MORB	1
64	N15559	Spacer Bushing - 0.385 ID x 5/8 OD x 1 Lg	4
65	N34620	Connector - Swivel - 7/8-14 MORB	6
66	N37401	Rubber Cover Hose - 2 ID x 12	1
67	N42083	Rubber Cover Hose - 2 ID x 36	1
68	C47188	Cylinder - Swing Arm	2
69	C47335	Cylinder - Lift Auger	1
70	N47785	Joy Stick Controller - Solenoid Valve	1
71	N47762	Auger Control Harness	1
72	N45370	Valve - Solenoid - Hydraulic Assist Auger	1
73	N47901	Valve - Flow Control	1
74	N47918	Adjustment Stop	1
75	N47324	Bracket - Flow Control Valve	1
76	W-523	Lockwasher - 3/8	7
77	W-514	Hex Nut - 3/8	7
78	H-5545	Check Valve - w/Connector - 1/2 FNPT x 1/2 FNPT	1
79	H18263	Check Valve - w/3/8-FNPT x 3/8-FNPT	1
80	C-719	Connector - 1/2 MNPT x 3/8 FNPT	2
81	N47798	Connector - 9/16-18 FJIC x 3/8 MNPT	2
82	C-4405	Connector - 9/16-18 MJIC x 3/8 MNPT	3
83	C15348	Connector - 9/16-18 MJIC x 3/4-16 MORB	6
84	N47903	Connector - 7/8-14 MJIC x 1 1/16-12 MORB	3
85	C-4403	Tee - (2) 9/16-18 MJIC x (1) 9/16-18 FJIC	1
86	N31908	Tee - (2) 9/16-18 MJIC x (1) 9/16-18 MORB	1
87	N47902	Tee - (1) 9/16-18 MORB x (2) 9/16-18 MJIC	2
88	H18746	Tee - Swivel - (2) 7/8-14 MJIC x (1) 7/8-14 FJIC	1
89	S29967	90 Elbow - Swivel - 9/16-18 FJIC x 9/16-18 MJIC	8
90	N16143	90 Elbow - 9/16-18 MJIC x 9/16-18 MORB	3
91	K-5806	90 Elbow - Swivel - 7/8-14 MJIC x 7/8-14 FJIC	2
92	C24585	90 Elbow - 7/8-14 MJIC x 3/4-16 MORB	2
93	C-4552	Hyd Hose - 1/4 x 24 Lg w/9/16-18 FJIC	2
94	C16652	Hyd Hose - 1/4 x 60 Lg w/9/16-18 FJIC	1
95	S39506	Hyd Hose - 1/4 x 66 Lg w/9/16-18 FJIC	1
96	H18266	Hyd Hose - 1/4 x 80 Lg w/9/16-18 FJIC	2
97	D17845	Hyd Hose - 1/4 x 198 Lg w/9/16-18 FJIC	1
98	C26347	Hyd Hose - 1/4 x 216 Lg w/9/16-18 FJIC	1
99	C-4468	Hyd Hose - 1/2 x 24 Lg w/7/8-14 FJIC	1
100	C-4404	Hyd Hose - 1/2 x 36 Lg w/7/8-14 FJIC	1
101	C26344	Hyd Hose - 1/2 x 42 Lg w/7/8-14 FJIC	1
102	* * * * *	Fan - (See Section 7)	1
103	* * * * *	Hydraulic Motor - Rexroth - (See Section 7)	1
104	N49676	Mounting Plate	1
	N19023	Decal - Danger “HOT” (Not Shown)	1
	N36263	Decal - Warning “BURN HAZARD” (Not Shown)	1
	N36443	Decal - “LEVER POSITION” (Not Shown)	1
	N19031	Decal - “AUGER / FAN” (Not Shown)	1

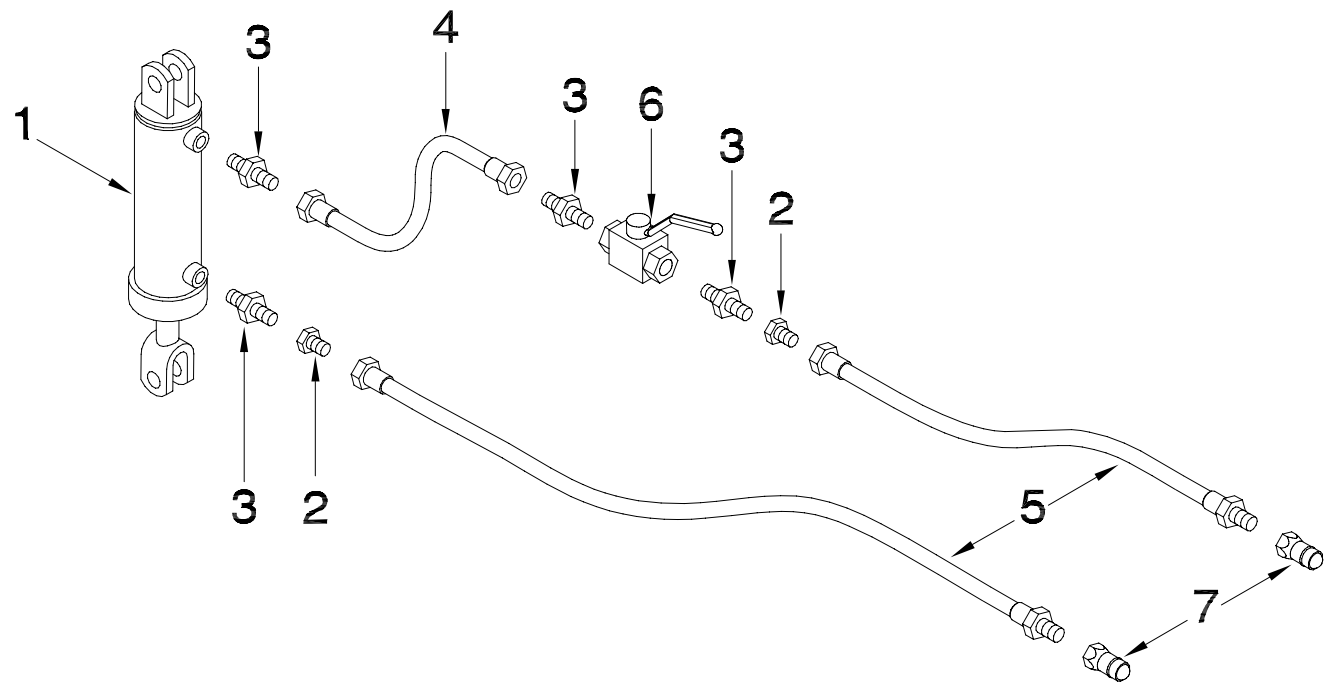

Item	Part No.	Description	Qty
1	C39175	Cylinder - 3 1/2 x 12	1
2	F10384	Connector - 9/16-18 MJIC x 7/8-14 FJIC	2
3	C14840	Connector - 7/8-14 MJIC x 3/4-16 MORB	4
4	N34366	Hyd Hose - 1/2 x 12 Lg w/7/8-14 FJIC	1
5	N37404	Hyd Hose - 3/8 x 152 Lg w/ 7/8-14 MORB X 9/16-18 FJIC	2
6	N42880	Valve - 2 Way Ball	1
6A	N42881	Handle - Valve	1
7	N34498	Male Pioneer Tip - 7/8-14 FORB	2

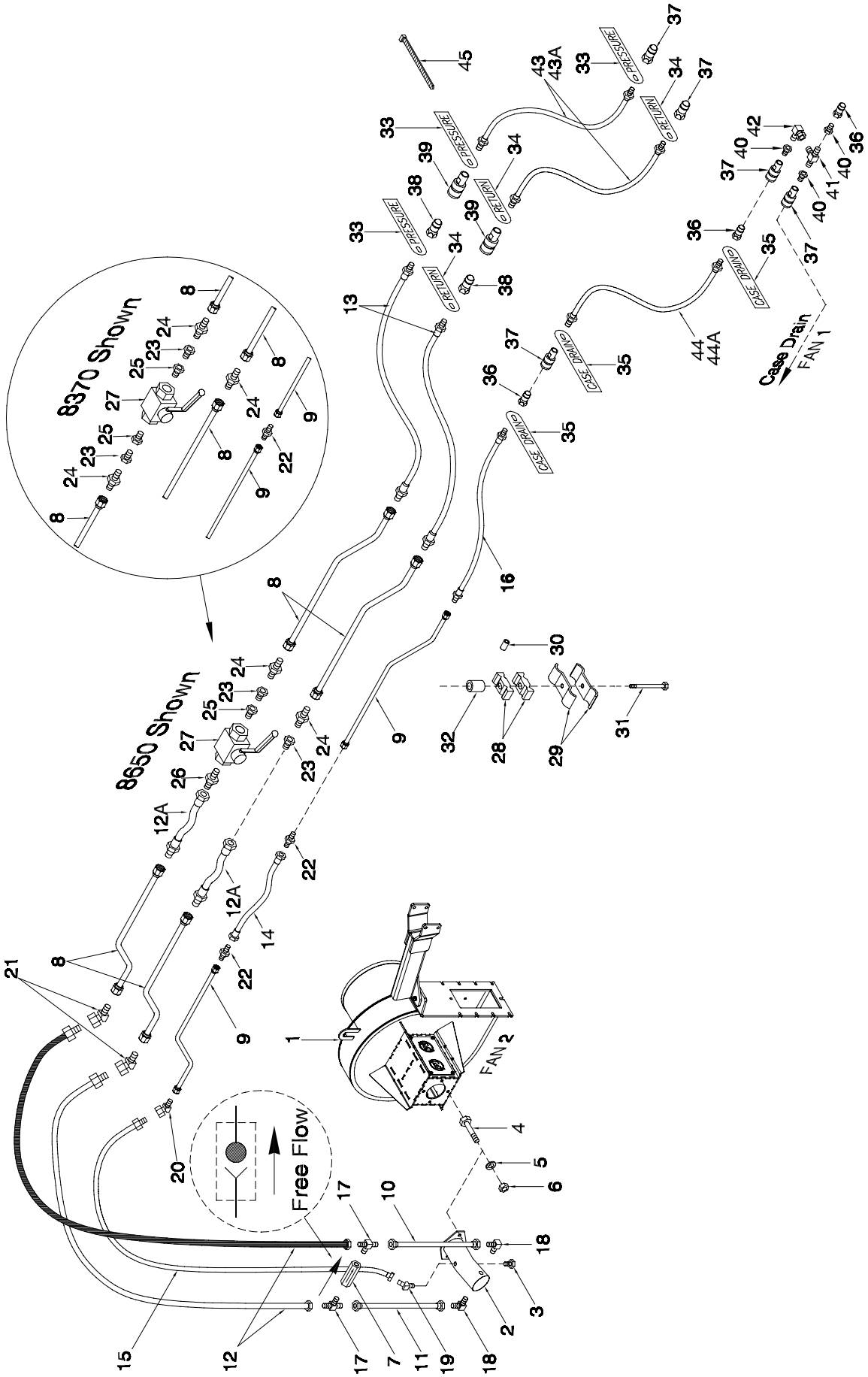
8370 Shown
8650 Shown
PRESSURE
RETURN
CASE DRAIN
Free Flow
Case Drain
FAN 1
FAN 2

Dual Fan - Tow Behind

Item	Part No.	Description	Qty
1	N37826	Fan (See Section 7)	1
2	N37742	Hydraulic Motor - 16cc - Rexroth (See Section 7)	1
3	N16621	Plug - 9/16-18 MORB	1
4	S-1189	Hex Bolt - 1/2 x 1 3/4 Lg	2
5	W-525	Lockwasher - 1/2	6
6	W-516	Hex Nut - 1/2	6
7	N16399	Check Valve - 7 PSI - 1 1/16-12 ORB	1
8	N36833	Oil Line - 1 x 94 Lg w / 6 Offset Bend x 1 5/16-12 FJIC	4
9	N36444	Oil Line - 1/2 x 94 Lg w / 6 Offset Bend x 3/4-16 FJIC	2
10	N15991	Hyd Hose - 3/4 x 12 Lg w/1 1/16-12 FJIC	1
11	N37900	Hyd Hose - 3/4 x 18 Lg w/1 1/16-12 FJIC	1
12	N19434	Hyd Hose - 3/4 x 35 Lg w/1 5/16-12 MJIC x 1 1/16-12 FJIC	2
12A	N19434	Hyd Hose - 3/4 x 35 Lg w/1 5/16-12 MJIC x 1 1/16-12 FJIC - (8435 to 8650)	2
13	N37037	Hyd Hose - 3/4 x 270 Lg w/1 5/16-12 MJIC x 1 1/16-12 MORB	2
14	D10821	Hyd Hose - 3/8 x 38 Lg w/3/4-16 FJIC - (8435 to 8650)	1
15	N19475	Hyd Hose - 3/8 x 48 Lg w/9/16-18 FJIC x 3/4-16 MJIC	1
16	N37180	Hyd Hose - 3/8 x 270 Lg w/3/4-16 MJIC x 7/8-14 MORB	1
17	N16388	Tee - (2) 1 1/16-12 MJIC x (1) 1 1/16-12 MORB	2
18	N16359	90 Elbow - 1 1/16-12 MJIC x 1 1/16-12 MORB	2
19	N19578	45 Elbow - 9/16-18 MJIC x 9/16-18 MORB	1
20	N36380	45 Elbow - Swivel - 3/4-16 FJIC x 3/4-16 MJIC	1
21	N36382	45 Elbow - Swivel - 1 5/16-12 FJIC x 1 5/16-12 MJIC	2
22	N25754	Connector - 3/4-16 MJIC	2
23	N19338	Connector - 1 5/16-12 FJIC x 1 1/16-12 MJIC - (8435 to 8650)	2
24	N16346	Connector - 1 5/16-12 MJIC	3
25	N37849	Adapter - 1 1/16-12 MORB x 1 1/16-12 FJIC	1
26	N15990	Connector - 1 1/16-12 MJIC x 1 1/16-12 MORB - (8435 to 8650)	1
27	N37845	Ball Valve - 1 1/16-12 MORB	1
28	C-4698	Nylon Oil Line Clamp	14
29	D-4808	Oil Line Clamp	8
30	N21632	Oil Line Spacer	4
31	N40761	Hex Bolt - 3/8 x 7 1/2 Lg	4
32	N15559	Spacer - 0.385 ID x 5/8 OD x 1 Lg	4
33	N34576	Tag - Hose ID - Air Tank - Fan/Auger - PRESSURE	3
34	N34577	Tag - Hose ID - Air Tank - Fan/Auger - RETURN	3
35	N34578	Tag - Hose ID - Air Tank - Fan/Auger - CASE DRAIN	3
36	N34498	Male Pioneer Tip - 7/8-14 FORB	3
37	N34488	Pioneer Coupler - 7/8-14 FORB	2
38	N37914	3/4 Male Tip - 1 1/16-12 FORB	2
39	N37915	3/4 Female Coupler - 1 1/16-12 FORB	2
40	N34620	Connector - Swivel - 7/8-14 MORB x 7/8-14 FJIC	3
41	C-4394	Tee - (3) 7/8-14 MJIC	1
42	K-5806	90 Elbow - Swivel - 7/8-14 MJIC x 7/8-14 FJIC	1
43	N37036	Hyd Hose - 3/4 x 396 Lg w/1 1/16-12 MORB	2
43A	N37035	Hyd Hose - 3/4 x 348 Lg w/1 1/16-12 MORB	2
43B	N44955	Hyd Hose - 3/4 x 456 Lg w/1 1/16-12 MORB (5-Frame Contour Air Drill)	2
44	N36045	Hyd Hose - 3/8 x 396 Lg w/7/8-14 MORB	1
44A	N36043	Hyd Hose - 3/8 x 348 Lg w/7/8-14 MORB	1
44B	N44956	Hyd Hose - 3/8 x 456 Lg w/7/8-14 MORB (5-Frame Contour Air Drill)	1
45	D-4951	Nylon Tie Strap - 7 3/8 Lg	12

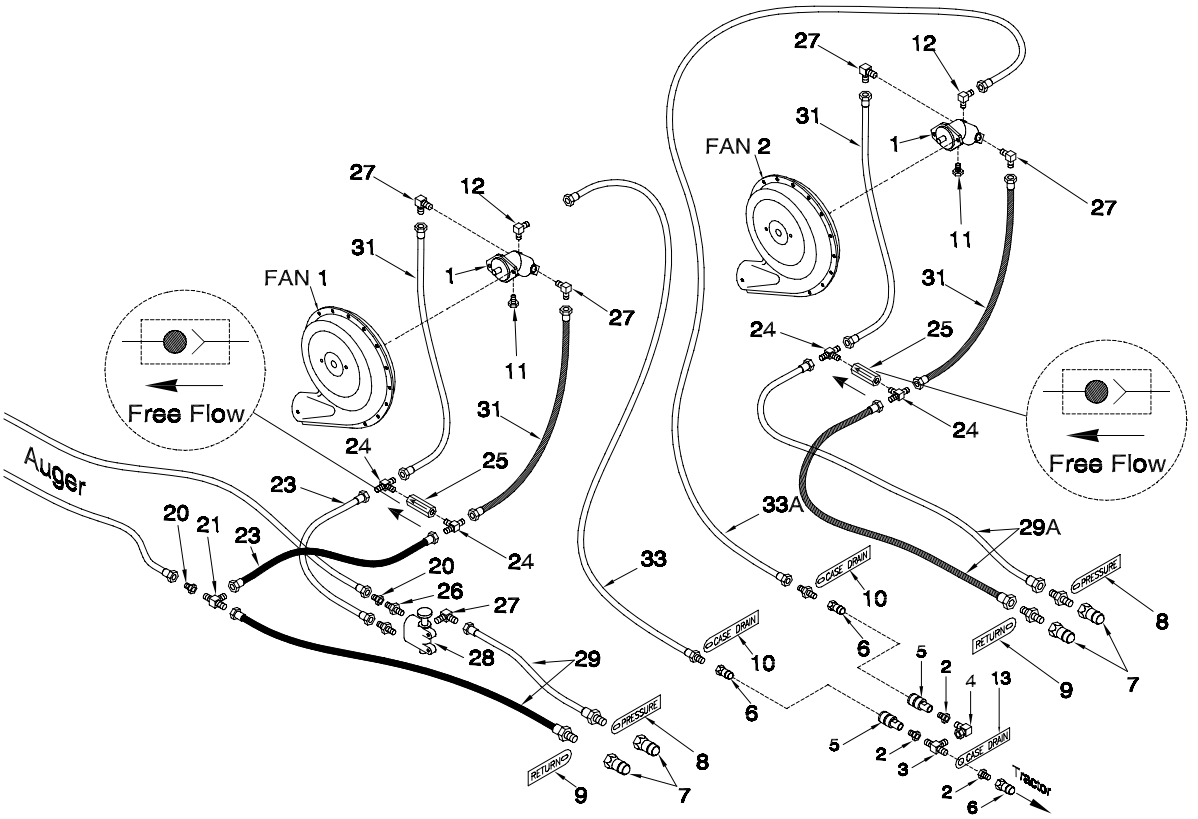

Item	Part No.	Description	Qty
1	* * * * *	Hydraulic Motor - Rexroth - (See Section 7)	1
2	N34620	Connector - Swivel - 7/8-14 MORB x 7/8-14 FJIC	2
3	C-4394	Tee - (3) 7/8-14 MJIC	1
4	K-5806	90 Elbow - Swivel - 7/8-14 MJIC x 7/8-14 FJIC	1
5	N34488	Pioneer Coupler - 7/8-14 FORB	1
6	N34498	Male Pioneer Tip - 7/8-14 FORB	7
7	N37914	3/4 Male Tip - 1 1/16-12 FORB	2
8	N34576	Tag - Hose ID - Tank - Fan/Auger - PRESSURE	1
9	N34577	Tag - Hose ID - Tank - Fan/Auger - RETURN	1
10	N34578	Tag - Hose ID - Tank Fan/Auger - CASE DRAIN	1
11	N16621	Plug - 9/16-18 MORB	1
12	N19578	45 Elbow - 9/16-18 MJIC x 9/16-18 MORB	1
20	N19337	Connector - 7/8-14 MJIC x 1 1/16-12 FJIC	2
21	N19549	Tee - (3) 1 1/16-12 MJIC	1
23	N25644	Hyd Hose - 3/4 x 35 w/1 1/16-12 FJIC	1
24	N16388	Tee - (2) 1 1/16-12 MJIC x (1) 1 1/16-12 MORB	2
25	N16399	Check Valve - 7 PSI - 1 1/16-12 FORB	1
26	N15990	Connector - 1 1/16-12 MJIC x 1 1/16-12 MORB	2
27	N16359	90 Elbow - 1 1/16-12 MJIC x 1 1/16-12 MORB	3
28	N34506	Selector Valve w/1 1/16-12 FORB	1
29	N37038	Hyd Hose - 3/4 x 84 Lg w/ 1 1/16-12 MORB x 1 1/16-12 FJIC	2
30	N50084	Hyd Hose - 3/4 x 132 Lg w/ 7/8-14 FJIC x 1 1/16-12 FJIC	2
31	N37900	Hyd Hose - 3/4 x 18 Lg w/1 1/16-12 FJIC	2
32	N37404	Hyd Hose - 3/8 x 152 Lg w/ 7/8-14 MORB X 9/16-18 FJIC	1
33A	N50088	Hyd Hose - 3/8 x 396 Lg w/ 7/8-14 FJIC	1
	D-4951	Nylon Tie Strap -7 3/8 Lg	15

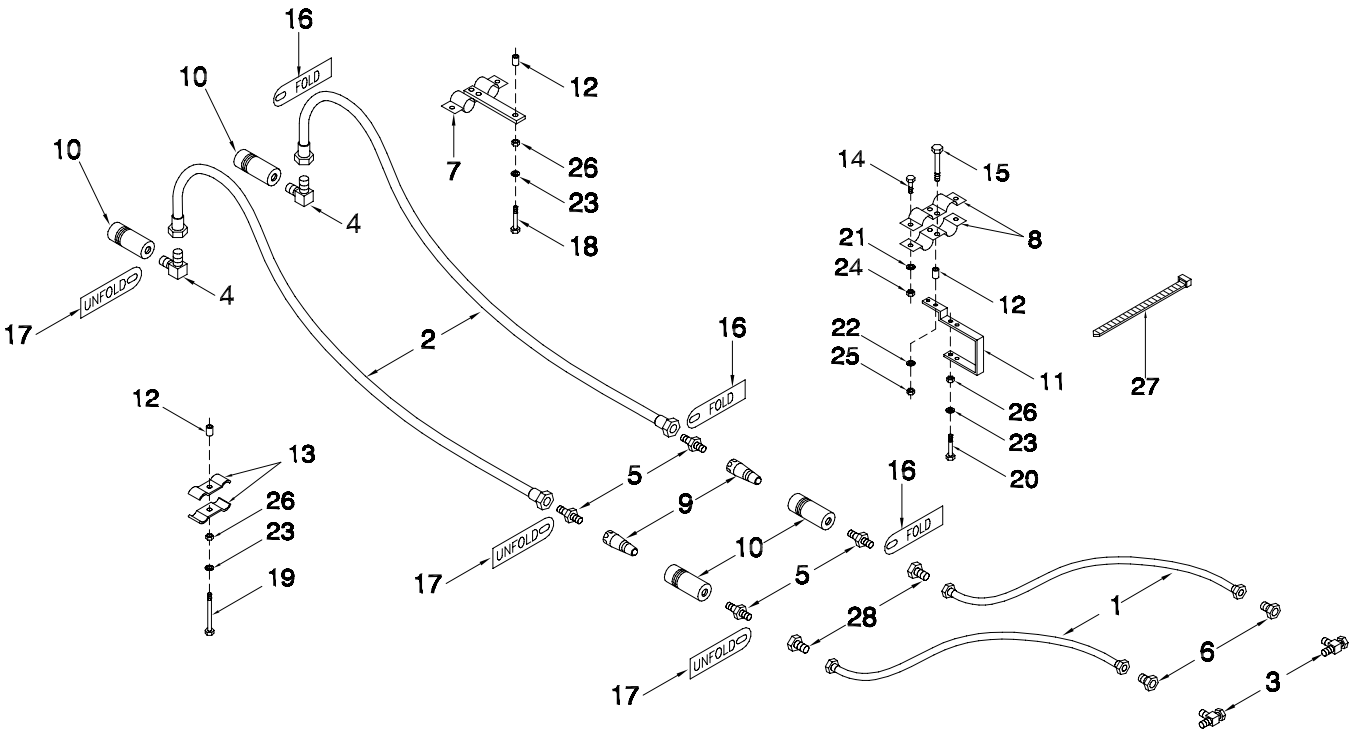

Item	Part No.	Description	Qty
1	S39503	Hyd Hose - 1/4 x 132 Lg W/9/16-18 FJIC	2
2	C31369	Hyd Hose - 1/2 x 468 W7/8 - 14 FJIC	2
3	C-4403	Tee - (2) 9/16-18 MJIC x (1) 9/16-18 FJIC	2
4	C15318	90 Elbow - 7/8-14 MJIC x 7/8-14 MORB	2
5	N34620	Connector - Swivel - 7/8-14 MORB x 7/8-14 FJIC	4
6	N37876	Reducer - 3/4-16 MJIC x 9/16-18 FJIC	2
7	S-1379	Pioneer Coupler Assembly	1
8	N16608	Coupler Clamp - Female Pioneer	2
9	N34498	Male Pioneer Tip - 7/8-14 FORB	2
10	N34488	Pioneer Coupler - 7/8-14 FORB	4
11	N21691	Mounting Bracket	1
12	N16257	Spacer	3
13	D-4808	Oil Line Clamp	2
14	W-469	Hex Bolt - 1/4 x 3/4	2
15	W-473	Hex Bolt - 5/16 x 1 1/2	2
16	S29960	Tag - Hose ID - Wing Lift - FOLD	3
17	S29961	Tag - Hose ID - Wing Lift - UNFOLD	3
18	D-5249	Hex Bolt - 3/8 x 3 1/4	1
19	S-1299	Hex Bolt - 3/8 x 4 1/2	1
20	C-3918	Hex Bolt - 3/8 x 5	1
21	W-521	Lockwasher - 1/4	2
22	W-522	Lockwasher - 5/16	2
23	W-523	Lockwasher - 3/8	3
24	W-512	Hex Nut - 1/4	2
25	W-513	Hex Nut - 5/16	2
26	W-514	Hex Nut - 3/8	3
27	D-4838	Tie Strap	10
28	C-4392	Reducer - 7/8-14 FJIC x 9/16-18 MJIC	1
	H38276	Kit - Hydraulic Extension (Includes All Items above) (ORDER THROUGH WHOLEGOODS)	

Meter Shutoff Hydraulics

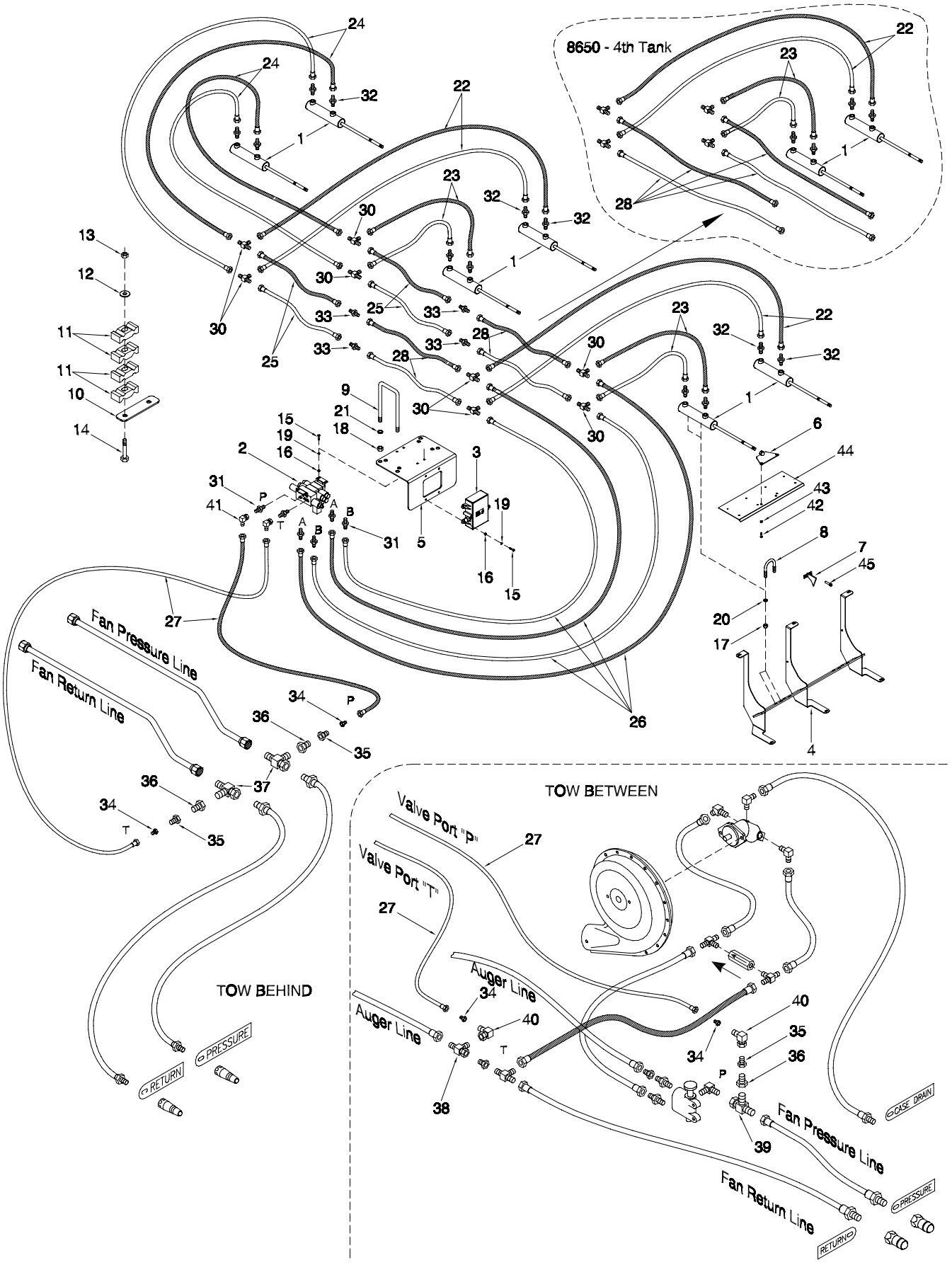

Meter Shutoff Hydraulics

Item	Part No.	Description	No. Used 2Tank	3Tank	4Tank
1	N47298	Cylinder - 1 1/2 x 5	4	6	8
2	N47008	Valve Block	1	1	1
3	N47004	Controller	1	1	1
4	N45825	Mount - Hydraulic Cylinder	2	3	4
5	N47007	Mount - Valve Block	1	1	1
6	N47005	Gate Connector	4	6	8
7	N47177	Divider - Meter Body	2	3	4
8	F-5791	U-Bolt - 1/2 x 1 7/8 x 3 Lg	8	12	16
9	C14758	U-Bolt - 5/8 x 4 x 11 1/2 Lg	2	2	2
	N45418	U-Bolt - 5/8 x 3 x 4 Lg	2	2	2
10	N48111	Mounting Plate	1	1	1
11	C-4698	Nylon Clamp - Oil Line	8	12	16
12	W-538	Washer - 3/8	2	3	4
13	M-3388	Lock Nut - 3/8	2	3	4
14	W-481	Hex Bolt - 3/8 x 3 1/2 Lg	2	3	4
15	W-469	Hex Bolt - 1/4 x 3/4 Lg	8	8	8
16	W-512	Hex Nut - 1/4	8	8	8
17	W-516	Hex Nut - 1/2	16	24	32
18	W-517	Hex Nut - 5/8	4	4	4
19	W-521	Lockwasher - 1/4	8	8	8
20	W-525	Lockwasher - 1/2	16	24	32
21	W-526	Lockwasher - 5/8	4	4	4
22	C-4552	Hyd Hose - 1/4 x 24 Lg w/9/16-18 FJIC	2	4	6
23	C14835	Hyd Hose - 1/4 x 36 Lg w/9/16-18 FJIC	2	4	6
24	W21962	Hyd Hose - 1/4 x 108 Lg w/9/16-18 FJIC	4	4	4
25	C16652	Hyd Hose - 1/4 x 60 Lg w/9/16-18 FJIC	4	4	4
	S44353	Hyd Hose - 3/8 x 48 Lg w/9/16-18 FJIC - 8630 & 8650	-	4	4
26	S22406	Hyd Hose - 1/4 x 72 Lg w/9/16-18 FJIC - 8370, 8425	4	4	-
	S39503	Hyd Hose - 1/4 x 132 Lg w/9/16-18 FJIC - 8370 Tow Between	4	4	-
	S13317	Hyd Hose - 1/4 x 180 Lg w/9/16-18 FJIC - 8435	4	4	-
	N48126	Hyd Hose - 3/8 x 72 Lg w/9/16-18 FJIC x 9/16 90 Deg FJIC - 8630 & 8650	-	4	4
27	S42969	Hyd Hose - 3/8 x 36 Lg w/9/16-18 FJIC - Tow Behind	2	2	2
	N48126	Hyd Hose - 3/8 x 76 Lg w/9/16-18 FJIC - Tow Between	2	2	-
28	S42969	Hyd Hose - 3/8 x 36 Lg w/9/16-18 FJIC - 8630 & 8650	-	4	4
29	N48120	Electrical Harness (Not shown)	1	1	1
30	C-4393	Tee - (3) 9/16-18 MJIC	4	8	12
31	N29358	Connector - 9/16-18 MJIC x 9/16-18 MORB	6	6	6
32	S34115	Connector - 9/16-18 JIC x 7/16-20 MORB	8	12	16
33	H18269	Connector - 9/16-18 MJIC - 8630	-	4	-
34	F10384	Connector - 9/16-18 MJIC x 7/8-14 FJIC	2	2	2
35	N19337	Connector - 7/8-14 MJIC x 1 1/16-12 FJIC	2	2	2
36	N19338	Connector - 1 1/16-12 MJIC x 1 5/16 FJIC	2	2	2
37	N19336	Tee - Swivel - (1) 1 5/16-12 FJIC x (2) 1 5/16-12 MJIC	2	2	2
38	H18746	Tee - Swivel - (2) 7/8-14 MJIC x (1) 7/8-14 FJIC - Tow Between	1	1	1
39	N29356	Tee - Swivel - (1) 1 1/16-12 FJIC x (2) 1 1/16-12 MJIC - Tow Between	1	1	1
40	K-5806	90 Elbow - Swivel - 7/8-14 MJIC x 7/8-14 FJIC - Tow Between	2	2	2
41	S29967	90 Elbow - Swivel - 9/16-18 MJIC x 9/16-18 FJIC	1	1	1
42	N36597	Hex Bolt - 1/4 x 3/4 Lg - Stainless Steel	4	6	8
43	D-5277	Locknut - 1/4 Serrated	4	6	8
44	N36985	Shutoff Plate - Long	2	3	4
44A	N36995	Shutoff Plate - Short	2	3	4
45	N37339	Socket Head Capscrew - 1/4 x 1/2 Lg	4	6	8

Meter Shutoff Electrical

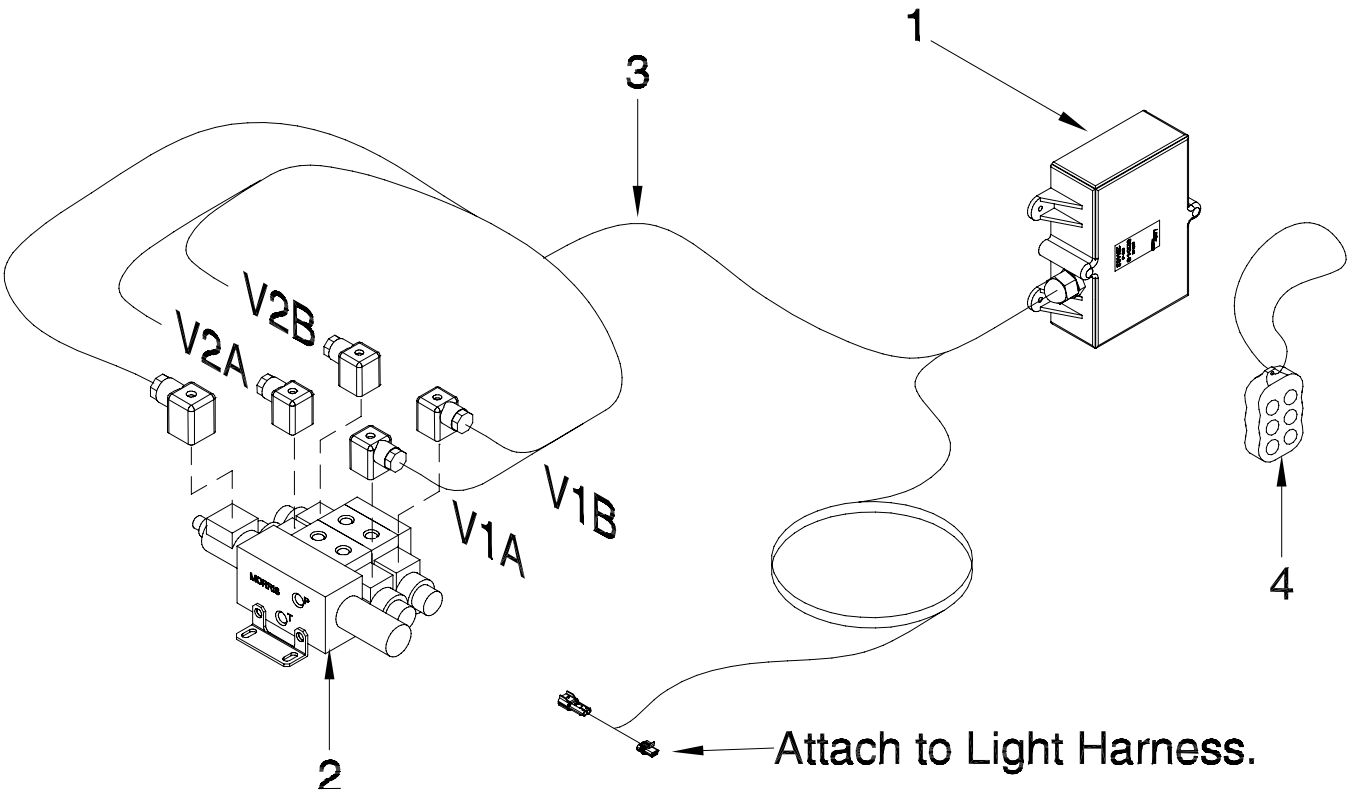

Item	Part No.	Description	Qty
1	N47004	Controller (Includes Item 4)	1
2	N47008	Valve Block	1
3	N48120	Electrical Harness	1
4	N48467	Wireless Transmitter	1

Meter Shut-Off

Operating Guidelines

- Familiarize yourself with the remote functions.
- On initial startup of the system the remote needs to learn the transmitter signal of the solenoid by:
  1. Power up solenoid
  2. Press and hold the remote ON button for 10 seconds.

Note: The remote will need to learn the transmitter signal each season of use and when batteries are replaced.

- To close a meter shut-off section press and hold the remote CLOSE button for approximately 30 seconds. The fan rpm will drop slightly while the cylinders are closing and will resume full rpm once cylinders are closed.
- To open a meter shut-off section press and hold the remote OPEN button for approximately 30 seconds. The fan rpm will drop slightly while the cylinders are opening and will resume full rpm once cylinders are opened.
- Ensure solenoid is correctly wired to match remote. (i.e. Left buttons controlling left shut off)
- Check all wire harness connections for corrosion and use a dielectric spray to clean.
- Periodically throughout the day typically at each fill of the air cart, visually check shut-offs to ensure they are functioning correctly.

Important: It is strongly recommended to have the seeding unit equipped with a blockage monitor system to ensure product flow.

Note: Acres are tabulated using total implement width and does not account for meter shut-off usage.

Important

Metering Wheels require purging once meter shut-offs are opened. A half revolution of the metering wheel is required before product begins to meter. Coarse seeds and fertilizer will require forward travel of the seeding tool of 10 feet (3.5 m) minimum. Fine seeds require forward travel of the seeding tool of 110 feet (34 m) minimum.
Products and rates may vary forward travel distance. Operator must familiarize oneself with distance required for products being used.



Meter Shut-Off Remote Control



Meter Shut-Off Cylinders

Hydraulic Assit Conveyor/Auger

Arm Speed Control Adjustment

The operating speed of the arms will require setting to the preference of the operator. The hydraulic flow rate of the tractor directly affects the setting.

- Adjust the operating speed of the arms with the flow control valve to provide smooth controllable comfortable operation.

Note: The valve has a restrictor plate to prevent excessively quick movement of the arms. DO NOT REMOVE restrictor plate.



Flow Control Valve

Controller Storage

- Place joy stick controller in holder on outer arm.
- Slide cover over joy stick.

Note: The controller is water resistent. But should be placed inside when the air cart is not being used for extended periods or during prolonged rain.



Joy Stick Holder



Joy Stick Cover

Hydraulic Assit Conveyor/Auger - Continued

Hydraulic Assist Operation

- Ensure selector valve is in correct position for conveyor operation and engage tractor hydraulics.
- Unlatch front lock and raise upper cradle pad with cradle handle.
- Keep head and upper body clear of pad and cradle handle movement.
- Unlatch central arm lock.

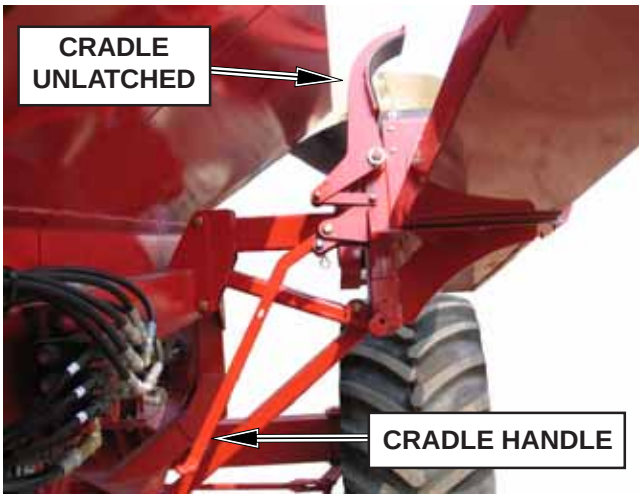

Front Lock



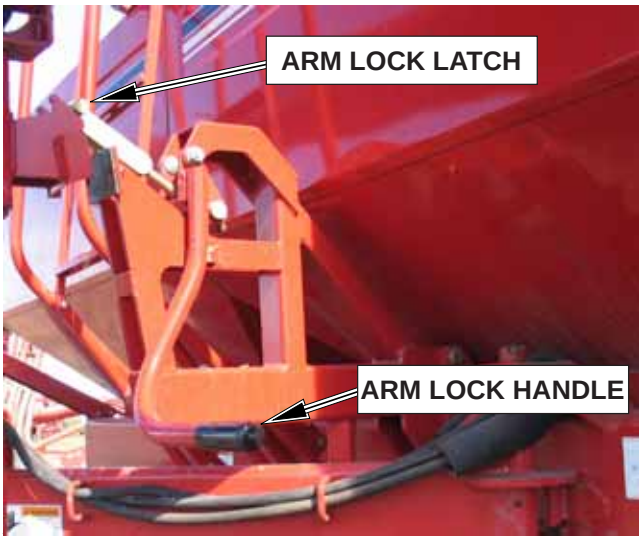

Arm Lock

Hydraulic Assit Conveyor/Auger - Continued

Hydraulic Assist Operation - Continued

- Refer to indicator decal for required inner arm positions.
- Swing out the conveyor using controller to extend/ retract cylinders as required.
- Adjust the speed which the arms move at with the flow control valve to provide smooth operation. See “Arm Speed Control Adjustment”.

Note: The valve has a restrictor plate to prevent excessively quick movement of the arms. DO NOT REMOVE restrictor plate.

- Whether filling or dumping tanks, start by positioning inner arm as indicated. Move outer arm as required.
- All three tanks can be filled from a central hopper location as shown in diagrams on next page. Keeping hopper anchored move both arms in small increments from one tank to the next as per indicator decal.

Note: To move from dumping front and 4th tanks to middle tank or vise versa, conveyor must be completely swung out and around to the opposite side of the inner arm.

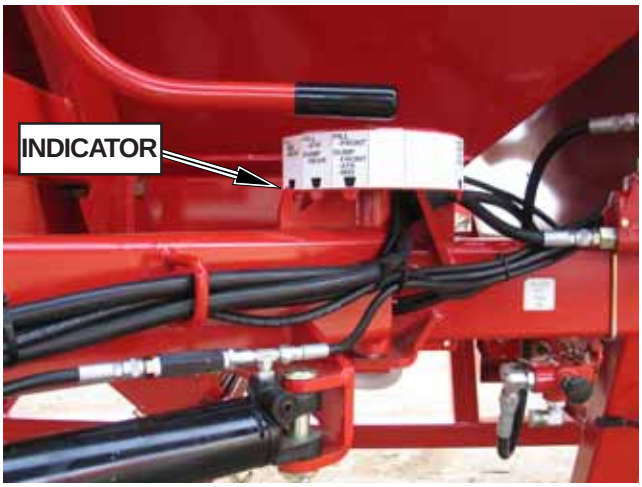

Arm Position Indicator



Danger

Keep all shields in place. Keep hands, feet and clothing away from auger intake, failure to do so will result in serious injury or death.

Hydraulic Assit Conveyor/Auger - Continued

Hydraulic Assist Transport

- Swing conveyor into transport position using controller to extend/retract cylinders as required.
- With lift cylinder, lower conveyor body onto lower cradle pad.
- Lock upper cradle pad in place with cradle handle.
- Secure controller in holder or remove if desired.
- Lock arm lock.



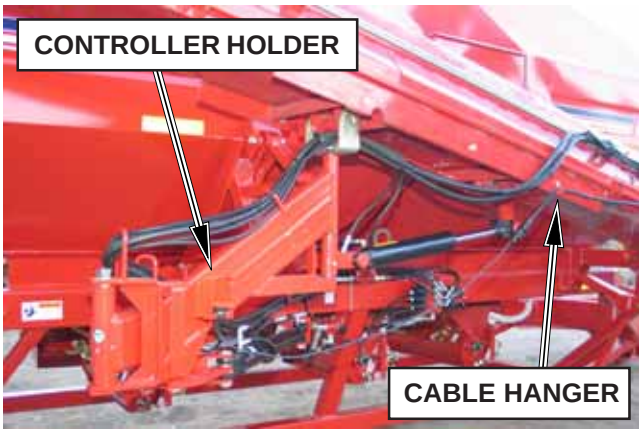



Conveyor

Operation

- One person must be in a position to monitor the operation of the conveyor at ALL times. That person should visually inspect the conveyor before and during operation and be alert to any un usual vibrations, noises, and loosening of any fasteners.
- For smoother startups, keep the conveyor from starting totally full. This will also ensure efficient operation.
- In cold weather, run empty conveyor for five minutes to warm up belt. Otherwise, do not operate the conveyor empty for long periods of time.
- You must “break-in” the conveyor when it is new and at the beginning of each season. Refer to step 2 for instructions..
- Make sure the drive end is empty before shutting down the conveyor.
  Be certain to close ALL clean-out and inspection doors in the main conveyor hopper before operating.
  The operator should not add power before viewing the entire work area and checking that ALL personnel are clear of the designated work area.
  The operator should be alert to any unusual vibrations or noises that might indicate the need for service or repair during the initial startup and break-in period.
  The operator should regulate the grain flow to the main conveyor by controlling the amount of grain fed into the hopper. Avoid plugging the main conveyor by overfeeding the hopper.
  Be certain that all safety shields and devices remain in place during operation.
  Ensure that hands, feet, and clothing are kept away from moving parts.
  Stop the engine and lockout the power source whenever the equipment must be serviced or adjusted.

Startup and Break-In

A. Any conveyor that is new or has set idle for a season needs to go through a “break-in” period.

B. Engage the Conveyor at a slow RPM to minimize shock loads.

C. Do not allow the conveyor belt to “load up” at a low speed. If this occurs, high torque must be used to turn the belt and this can damage the conveyor.

D. Run the conveyor at partial capacity until several hundred bushels of grain have been conveyed and the belt and tube are polished.

E. Retighten belt to restore original belt tension.

F. When the belt and tube are polished and smooth, slowly work up to the recommended speed and run the conveyor at full speed.

⚠ Warning

NEVER perform maintenance on the conveyor unless all safety shields are in place.
Replace any that are damaged or lost. Do not clean, adjust, or lubricate any part of the machine.

Conveyor - Continued

Squaring One End of Belt

Lay a framing square along a straight edge of the belt to make a cut line on the back side of the belt. Cut belt along this line using a utility knife. If the belt has uneven edges, create an average centerline, and square off of this line. **A clean, straight, square cut is required for the belt to run true on the pulleys.**

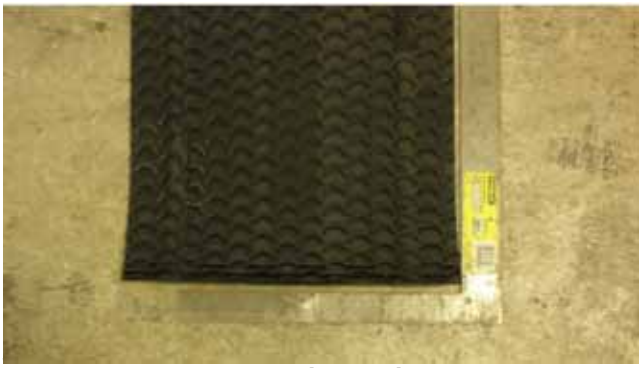

Squaring Belt

Installing Belt Splice

1. Center and press the fastener strip on the belt.
2. Press the Application Tool on the center of fastener strip with the cam lever in the “up” position.
3. Lower cam lever. Strike staple driver on each staple until staple clinches on Application Tool anvil.
4. Raise cam lever and move tool to outer edge of belt.
5. Clinch staples. Repeat until all staples are complete.

Continued on next page . . .



Centering strip on belt

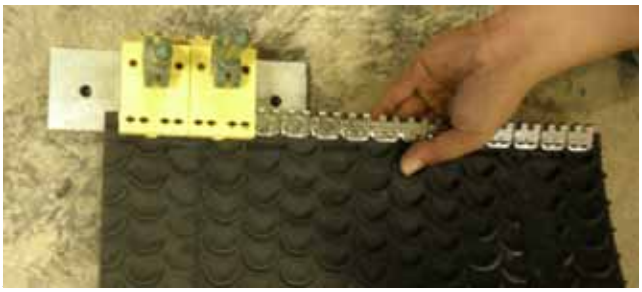

Cam lever up



Cam lever down and strike staple

Conveyor - Continued

Installing Belt Splice - Continued

6. Place the splice over a piece of flat steel and clinch each staple with a hammer. Turn belt over and peen staple ends flush with surface of fastener strip.
7. Bend fastener strips until they break apart.
8. Follow the procedure above for installing the second belt splice.
9. Insert the hinge pin. Crimp the pin washers on the ends of the pin using pliers.
10. Tighten the belt tensioning bolts to 20-23 FT-LBS. so that each side is adjusted equally.
11. Re-assemble the tail end Door Assembly.



Clinch staples



Bend fastener strips



Insert hinge pin



Crimp pin washers.

Conveyor - Continued

Installing Belt into the Conveyor

1. Remove the Tail End Door Assembly.
2. Slide a fish tape from the discharge end to the tail end of the conveyor. Pull a rope with a belt splice back through the conveyor. Fasten the conveyor belt to the rope splice, and pull the belt into the top of the con-veyor with the rope.
3. Using the fish tape, pull the bottom side of the belt through the conveyor. **Make sure the belt is free of extra twists before pulling it in.**
4. Check to see that the idler is all the way forward (toward the drive end).
5. Pull the belt up tight at the discharge end and cut off the excess length so that there is 1/2" of overlap after the end is squared.

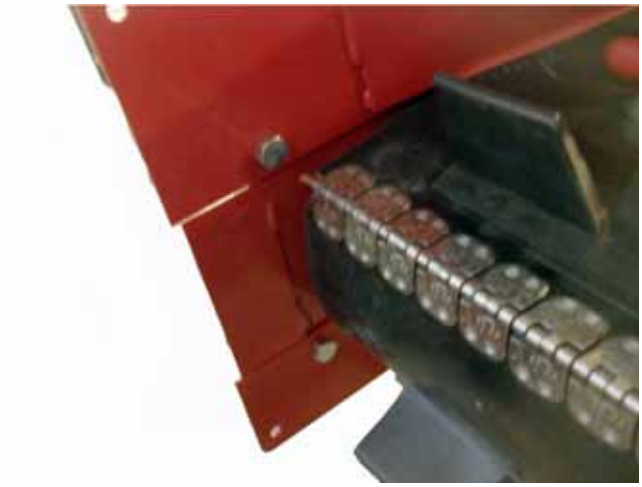

Remove tail



Idler forward

Conveyor - Continued

Tracking the Belt

1. Basic rule: ***the belt moves toward the end of the roller that it contacts first.***
2. Rollers must be square with the housing and parallel to each other.
3. Belt tension must be great enough to prevent slippage. Tension to 20-23 ft-lbs. on adjustment bolts

CAUTION: Make sure everyone is clear of machine before running.

4. Run the conveyor. Check to see that the belt runs centered on the drive roller. Turn off the machine. Adjust drive roller if necessary.

WARNING: Do not run the machine while adjusting. Failure to heed may result in personal injury or death.

5. To adjust drive roller, loosen the four nuts on the bearing holder plate, and the jam nut on the threaded adjuster. Retighten after adjusting is complete.

CAUTION: Make sure everyone is clear of machine before running.

6. Run the machine for two minutes. Make sure belt runs centered on drive pulley.
7. Open the Tail End Door to view the idler.
8. Run the machine. Check to see that the belt is running centered on the idler roller. Turn the machine off.

WARNING: Do not run the machine while adjusting. Failure to heed may result in personal injury or death.

9. If adjustment is necessary, adjust the tensioning bolts on the idler housing to 20-23 ft-lbs torque.
10. Check adjustment by running the machine. Make sure belt runs centered on idler pulley. The clearance between the belt and the housing should be the same on both sides.
11. Close the Tail End Door when complete.



Open tail and center belt on rollers



Left tensioning bolt



Right tensioning bolt

Conveyor - Continued

Conveyor Belt Adjustment

Belt tension and tracking will need periodic adjustment. Follow the guidelines under “Tracking the Belt” to make adjustments.



Important

Belt Alignment and Belt Tension shold be checked periodically.
Belt damage will occur if alignment or tension has not been maintained.
Belt tension should be 23 ft. lbs. of torque on adjustment bolts.
Belt should be tracked to be centere on the idle and drive roller.

Bearings

All drive shafts are supported by self-aligning, sealed ball bearings which have been packed at the factory and require no further lubrication. There is no adjustment to be made to the bearings, but check that the retainers are firmly fastened to the bearing stand. Also check that the setscrews in the lock collars are tight against the drive shaft.

Conveyor Belt Care

It is recommended that the conveyor belt be washed off and the tail end be cleaned out at the end of the season. This will help prevent material residue from building up and causing damage to the belt.

Conveyor - Continued

Conveyor Assembly - Parts

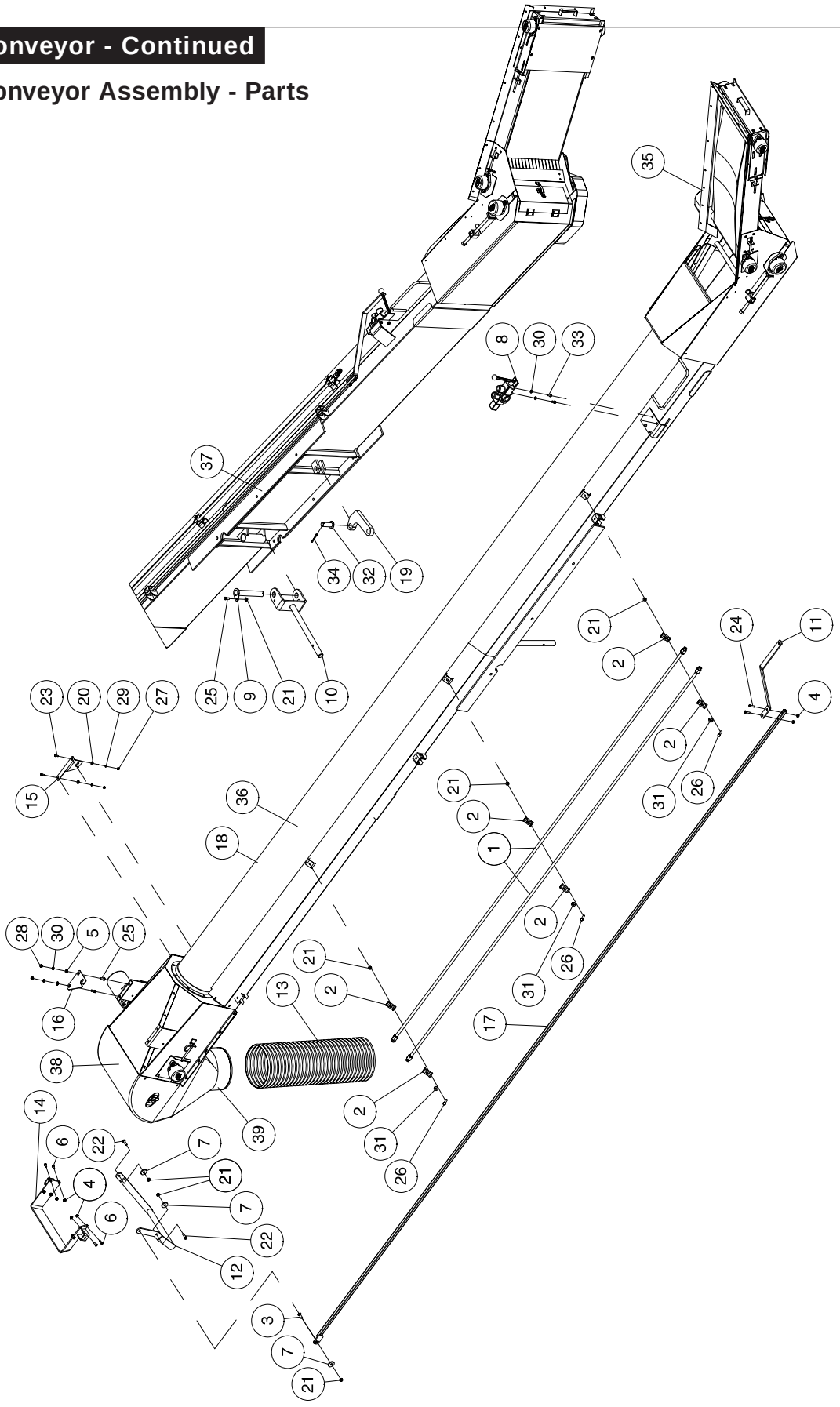

Conveyor - Continued

Conveyor Assembly - Continued

Item	Part No.	Description	Qty
1	C-4370	Hydraulic Tube	2
2	C-4698	Oil Line Clamp	6
3	D-5260	Carriage Bolt - 3/8 x 1 1/2 Lg	1
4	D-5278	Flange Lock Nut - 5/16	10
5	D-5489	Washer - 13/32 ID x 13/16 OD x 16 Ga	2
6	F-1767	Hex Bolt - 5/16 x 3/4 Lg	8
7	N21266	Wear Washer - 1/4	3
8	N34495	Hyd Control Valve - ORB	1
9	N36830	Auger Pivot Pin	1
10	N44744	Clevis Pin	1
11	N47032	Link Strap	1
12	N47037	Conveyor Control Handle	1
13	N47343	Conveyor Spout - 10" Black Flex Hose	1
14	N47706	Control Mounting Bracket	1
15	N47940	Conveyor Light Bracket Tank	1
16	N47941	Conveyor Light Bracket Hopper	1
17	N48298	Link - Conveyor Control	1
18	N48300	Conveyor - 22’	1
19	N48325	Floating Lug	1
20	S-1198	Washer - 5/16 ID x 3/4 OD x .065	2
21	S27987	Flange Lock Nut - 3/8 W/Center Lock	7
22	W-187	Hex Bolt - 3/8 x 1 1/4 Lg	2
23	W-469	Hex Head - 1/4 x 3/4 Lg	2
24	W-472	Hex Bolt - 5/16 x 1 1/4 Lg	2
25	W-475	Hex Bolt - 3/8 x 1 Lg	3
26	W-479	Hex Bolt - 3/8 x 2 1/4 Lg	3
27	W-512	Hex Nut - 1/4	2
28	W-514	Hex Nut - 3/8	2
29	W-521	Lockwasher - 1/4	2
30	W-523	Lockwasher - 3/8	6
31	W-538	Washer - 7/16 ID x 1 OD x 14 Ga	3
32	W-558	Pin - 1 Dia x 2 1/4 UL	1
33	W-867	Hex Bolt - 3/8 x 3/4 Lg	4
34	W-4181	Cotter Pin - 1/4 x 2 Lg	1
35	28302-00	End Group, Lower	1
36	45404-00	Tube Assembly - 21’ conveyor	1
	45430-00	Tube Assembly - 22’ conveyor	1
37	45422-00	Frame, Arm Mount	1
38	46110-03	End Group, Upper - 21’ conveyor	1
	46110-13	End Group, Upper - 22’ conveyor	1
39	85074-01	Spout, Molded (10”)	1
	45423-03	Rear Hopper	1
	N49475	Right Side Hopper - 45423-04	1
	N49474	Left Side Hopper - 45423-05	1
	N49472	Belt, Rubber Cleated - 21’ conveyor - 24550-21	1
	N49473	Belt, Rubber Cleated - 22’ conveyor - 24550-22	1
	24121-75	Pin, STN STL Covered	16”
	24121-73	Retainer, Pin	2
	24121-72	Belt Lacing	32”

Conveyor - Continued

Lower End Group - Parts

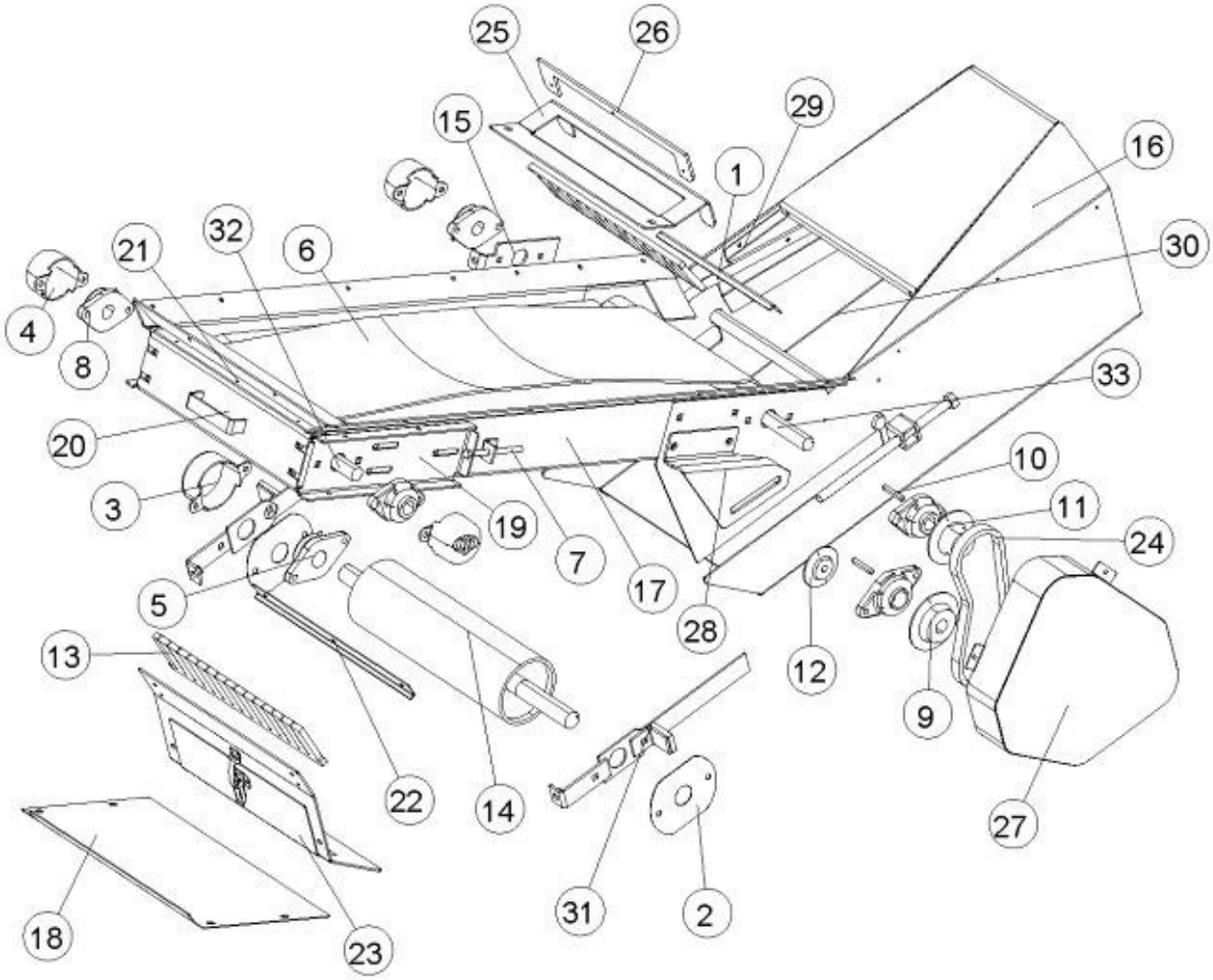

Conveyor - Continued

Lower End Group - Continued

Item	Part No.	Description	Qty
1	20038-05	Brush Holder	1
2	20048-01	Bearing Plate	2
3	23150-02	Cover - 1 1/4” Bearing	1
4	23150-04	Cover - 1” Bearing	3
5	24112-01	Bearing - Flange - 1 1/4”	2
6	N49471	Belt, Crescent - 24121-14	1
7	24208-01	Tap Bolt - 3/8 x 5 Lg	3
8	N49486	Bearing - Flange - 1” - 24336-01	4
9	N49485	Sprocket - 50/20 - 24343-01	1
10	24356-01	Key - 1” Shaft	2
11	N49484	Sprocket, Drive - 50/16 - 24395-01	1
12	N49483	Sprocket, Idler - 50/15 - 24396-01	1
13	N49482	Brush - 16” - 24418-01	2
14	24440-01	Drum Assembly - 5”	1
15	28007-01	Bracket, Bearing	1
16	28303-00	Transition Assembly - Lower	1
17	28306-00	Frame Assembly	1
18	28335-01	Shield, Lower Ground	1
19	28344-00	Bracket, Lower Bearing	2
20	28345-02	Lower Bracket w/Handle	1
21	N49480	Tail Flap - Lower - 28351-01	1
22	45038-05	Clamp, Brush	1
23	45414-00	Door Assembly	1
24	45416-01	Roller Chain - 50	1
25	45418-01	Flowguard	1
26	N49481	Flap - Flowguard - Cleated Belt - 45419-01	1
27	45420-00	Drive Guard	1
28	45421-01	Bracket - Idler Sprocket	1
29	45425-01	Bracket - Flap	1
30	45425-02	Bracket - Flap	1
31	46007-00	Bracket Assembly - Lower Bearing	2
32	47514-00	Drum Assembly - 3” Idler	1
33	47523-00	Drum Assembly - 3” Lagged	1
	24115-01	Tensioning Screw (Not Shown)	2
	47612-81	Flap Hold Down (Not Shown)	2
	N49469	Belt Splice Kit - 16" - 24387-16 (Not Shown)	
	N49479	Belt Seal - Side - 28252-01 (Not Shown)	
	N49478	Belt Seal - Right Tail - 46105-02 (Not Shown)	
	N49477	Belt Seal - Left Tail - 46105-01 (Not Shown)	

Conveyor - Continued

Upper End Group - Parts

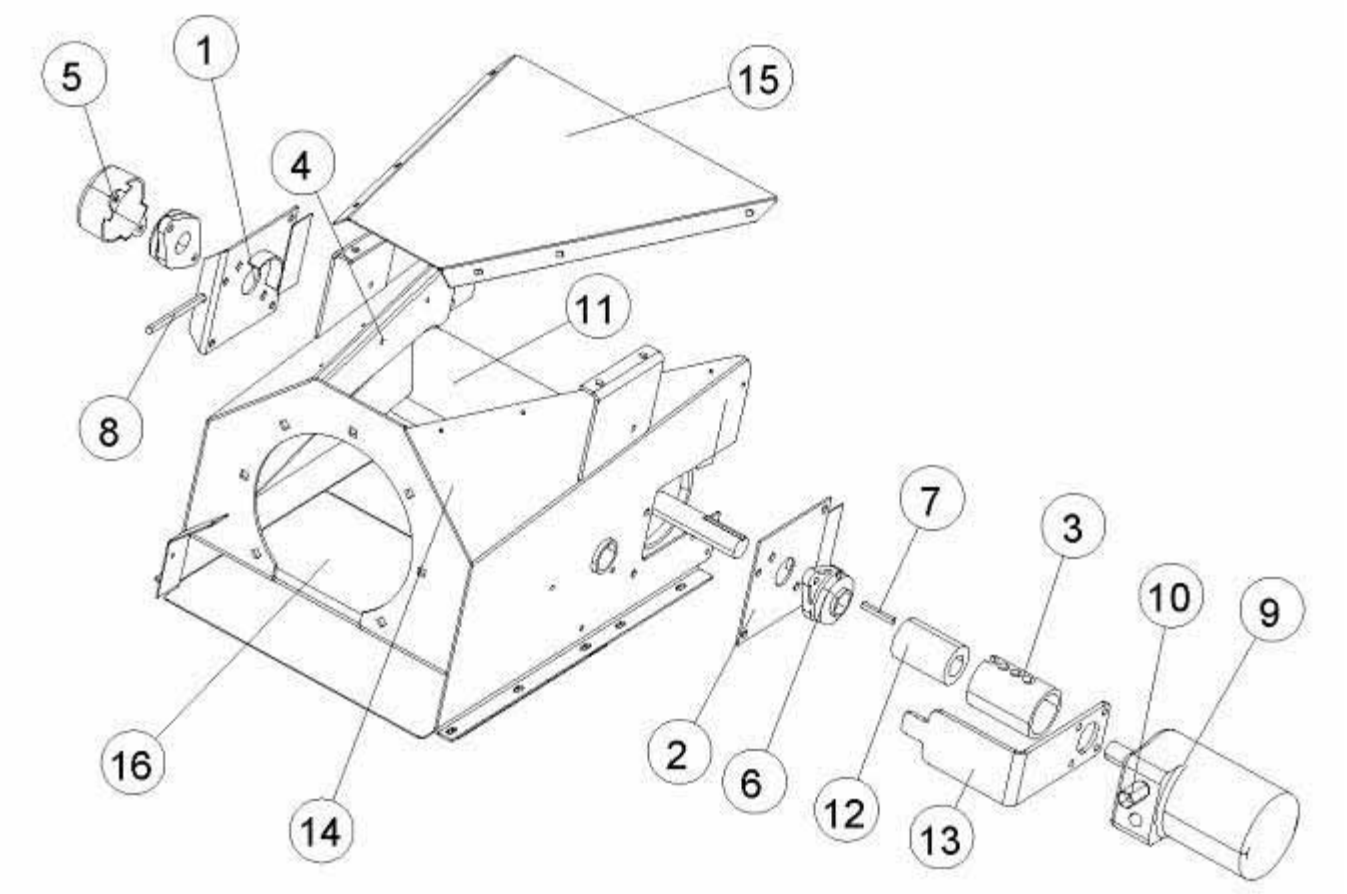

Item	Part No.	Description	Qty
1	20012-00	Plate Assembly - Bearing - Left	1
2	20013-00	Plate Assembly - Bearing - Right	1
3	20077-03	Tube - Shaft Guard	1
4	N49487	Flap - 22110-01	2
5	23150-02	Bearing Cover - 1 1/4” Bearing	1
6	N49488	Bearing - Flange - 1 1/4” - 24112-01	2
7	24177-01	Key - 1 1/4” Shaft	1
8	24208-01	Tap Bolt - 3/8 x 5	1
9	N49490	Hydraulic Motor - 7.6 cu. in. - 24349-01	1
10	N49489	Check Valve - 24369-01	1
11	24440-01	Drum Assembly - 5”	1
12	24473-03	Coupler	1
13	45076-01	Motor Mount - Hydraulic	1
14	46011-00	Upper Housing	1
15	46014-01	Cover - Top	1
16	46034-01	Cover - Lower	1

Trouble Shooting

Problem	Cause	Correction
General		
Delivery hoses plugged	Insufficient air flow.	Clean fan impeller blades. Clean fan intake screen. Increase fan rpm.
	Unbalanced air flow (Double Shoot)	Readjust the plenum damper.
	High Humidity.	Use moisture resistant fertilizer.
	Hose sag.	Shorten hoses or add additional supports.
	Seed boots plugged with dirt.	Clean seed boots. See *"Seed Boot Plugging"* below.
	Hose obstruction.	Remove obstruction from hose.
	Air delivery hose partly off manifold.	Reinstall hose properly on manifold.
	Kinked hoses.	Straighten hoses and properly secure them to framework.
	Obstruction in divider head.	Remove access door and clear obstruction from appropriate outlets - be sure to use appropriate screens when filling.
	Exceeding machine's delivery capabilities.	Reduce ground speed and speed up fan.
	Poorly mounted hoses.	Reroute hoses.
Hydraulic fan will not turn	Selector valve in wrong position.	Switch the selector to fan position.
	Hydraulic hoses not connected properly to tractor.	Reverse hydraulic hoses.
	Insufficient oil flow.	Perform flow test.
Fan turning too slow	Flow to hydraulic motor.	Increase flow control setting.
	Low hydraulic pressure.	Check hydraulic pressure minimum 2100 psi.
Material flowing thru system when unit is stationary and the fan running	Damaged metering wheel.	Replace metering wheel.
	Incorrect Seed Plate installed.	Adjust as required. See *"Seed Plate Settings".*

Trouble Shooting

Problem	Cause	Correction
Material not being divided in distribution head	Head partially blocked.	Remove blockage and reinstall hose.
	Kinked hose running to shank.	Straighten or replace hose.
	Damaged distribution section on head.	Replace head with new one.
	Bent or damaged diffuser pipe.	Straighten or replace diffuser pipe.
	Secondary hose length.	See “Secondary Hose” in Operation Section.
	Tanks not pressurized.	Inspect lid seals. Clean pressurization hoses.
Clutch slipping	Low power supply.	Ensure good connections at the power supply. Battery voltage must be 12V. See Maintenance Section.
	Metering drive torque load too high.	Clean and inspect clutch.
	Corroded, rusty, dirty clutch.	Replace clutch.
	Faulty clutch.	
Material not being metered out	Metering clutch not engaged.	Engage switch in tractor cab. See *“Clutch Slipping”* above.
	Metering Clutch slipping.	Install drive chain properly on Drive Sprocket.
	Main drive chain not installed.	Install new chain.
	Drive chain or chains broken.	Ensure connecting link is installed correctly. Curved part of spring clip should face the direction of chain travel.
	Massive air leak in tank, resulting in material being blown up out of the metering cup.	Repair the air leak. See “Air Leaks” in Maintenance Section. See “Tank Lid Adjustment” in Maintenance Section.
	Material caked up in tank.	Remove material and completely clean out the tank.
	Excessively wet material in tank.	Remove wet material and use reasonably dry material.
	Coupler bolt sheared.	Replace with Grade 8 bolt.

Trouble Shooting

Problem	Cause	Correction
Material not being accurately metered out of the metering body	Air delivery hoses loose, cracked or pulled off.	Tighten the hoses, replace cracked hoses or install hoses pulled off their respective locations.
	Metering Clutch slipping.	See *"Clutch Slipping"* on previous page.
	Inlet screen to fan blocked off.	Clean off material that is blocking the fan screen.
	Incorrect Seed Plate installed.	Install correct Seed Plate
	Seed Plate lock not adjusted correctly.	Adjust Seed Plate lock - See Maintenance Section.
	Material caked up above one or more of the metering cups.	Clean out caked up material.
	Excessively damp material in tank.	Use reasonably dry, fresh material only.
	Foreign obstruction in tank above metering wheels.	Remove obstruction, and always fill tanks through the screen.
	Caked up metering wheels on some or all of the metering cups.	Clean out the metering cups and wheels.
	Damaged metering wheels.	Replace broken metering wheels.
	Metering wheels mismatched to secondary outlet.	Install correct wheels to head. 1 3/4" wide wheel for 7 outlet head. 2" wide wheel for 8 outlet head. 2 1/4" wide wheel for 9 outlet head. 2 1/2" wide wheel for 10 outlet head.
	Incorrect spacing sprocket.	Be sure appropriate spacers are also used.
	Crank rotated wrong way when taking sample.	Install correct sprocket on back of transmission. See Maintenance Section.
	Collector Valves set incorrectly on Double Shoot machines.	Crank must be rotated counter clockwise. See Operation Section.
	Air Leak in System.	Adjust lids and doors as necessary. Replace damaged seals. See Maintenance Section.
	Meterbody pressurization hose disconnected.	Reconnect hose to meterbody/plenum.

Trouble Shooting		
Problem	**Cause**	**Correction**
Plugged seed boots	Backing up with openers near or in the ground.	Lift machine all the way up before backing up.
	Turning very sharp with openers near or in the ground.	Lift machine all the way up when making sharp turns.
	Lowering machine without any forward motion.	Always have forward motion when lowering machine.
	Worn openers or sweeps.	Replace openers.
	Severely bent or damaged boots.	Straighten or replace as required.
	Excessively wet conditions.	Change openers, operate when drier.
	Opener Adjustment.	See *"Opener Adjustment"* in Operation Section.

Trouble Shooting

Problem	Cause	Correction
Monitor		
Monitor lights up but does not seem to work	Faulty monitor	Replace monitor.
	Completely disconnected harness.	Connect harness.
No fan display	Incorrect gap between sensor and target.	Gap should be 0.030” (0.76 mm).
	Faulty sensor.	Replace sensor.
	Broken or shorted wire.	Replace or repair harness.
No ground speed display	Sensor to magnet gap too large.	Gap should be 0.030” (0.76 mm).
	Faulty sensor.	Replace sensor.
	Broken or shorted wire.	Replace or repair harness.
No meter speed display	Sensor to magnet gap too large.	Gap should be 0.030” (0.76 mm).
	Faulty sensor.	Replace sensor.
	Broken or shorted wire.	Replace or repair harness.
No display, no back light	Switched off	Switch unit on.
	Poor power connections at the battery.	Ensure good connections.
	Battery below 8 volts.	Check battery voltage.
	Temperature below -10C or above +40C.	Operate between -10C and +40C.

Trouble Shooting		
Problem	**Cause**	**Correction**
Bin indicates always empty	Broken wire.	Repair wire.
	Faulty sensor.	Replace sensor.
	Wires not hooked to sensor.	Hook up correctly.
Bin indicates always full	Blocked light beam on photoelectric sensor.	Remove object blocking the beam.
	Wire shorted to ground	Repair or replace wire.
	Faulty sensor.	Replace Sensor.

No	323
Date	October 28, 2008
Machine	8XL Series Air Cart

Technical Bulletins
Reference: Blank Off

The stainless steel Blank Off (N36145) has been replaced by a plastic Blank Off (N42540).

The new Blank Off does not require the seal strip when installed.

Either Blank Off will work in the same application and use the same Hex Head Capscrew (N37339).

Please notify your Parts personal of the change.

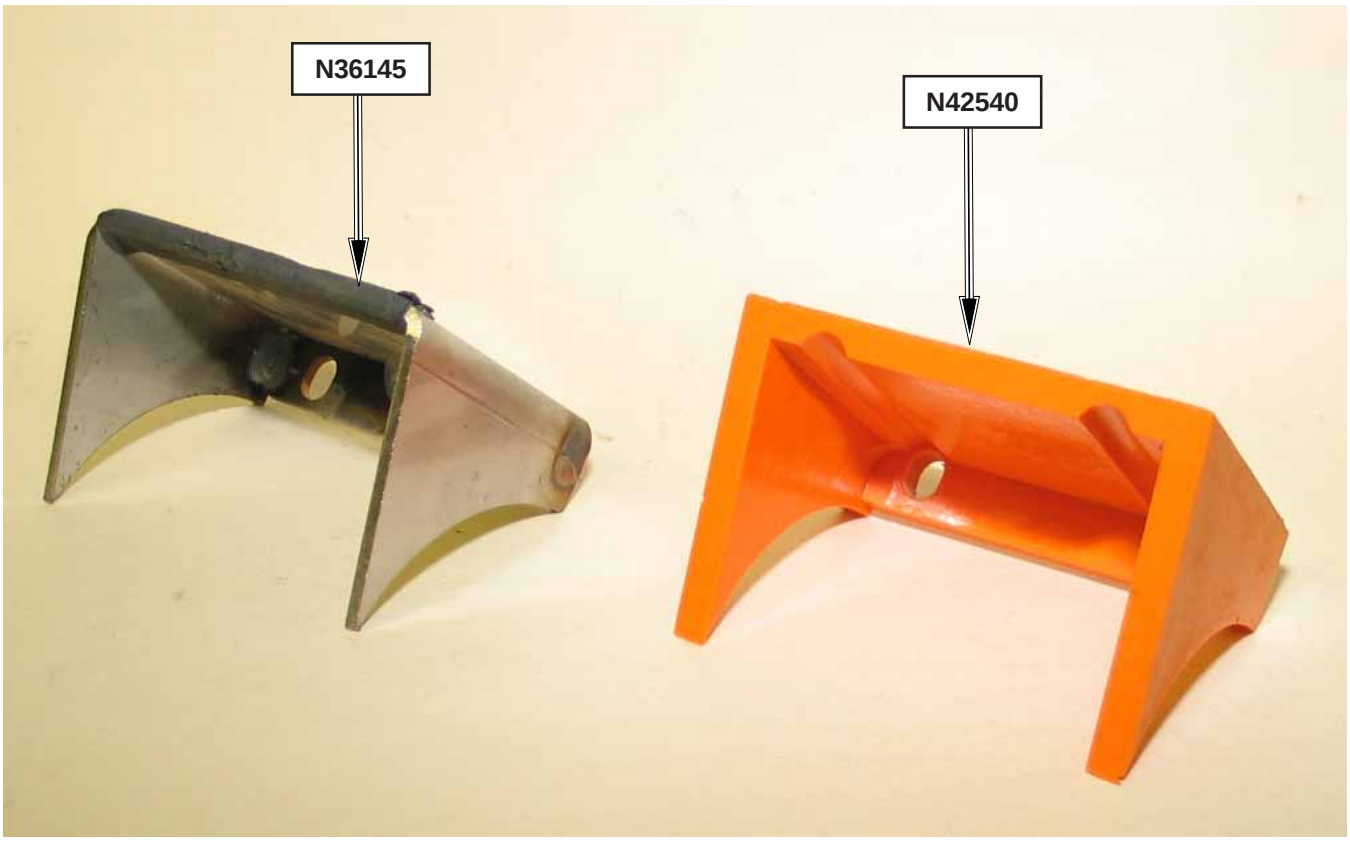

Reference: Liquid Tank Capacities

Liquid Tanks mounted onto the two tank models of the EIGHT XL Series Air Carts must meet the following criteria:

1. The total weight of the liquid tank and all mounting/drive hardware plus the liquid fertilizer weight must not exceed the values for the cart as listed below.
2. The center of the tank can not exceed dimension “X” in front of Air Cart tanks. If this dimension is larger the total mass of the liquid tank is greatly reduced.
3. Tow Between models using the HD Clevis requires a tractor drawbar with an 11,000 lbs (5,000 kg) vertical load capacity.
4. Air Carts must be equipped with the larger 32 inch tire option.

Model	Liquid Tank Mass (Includes all Hardware)	Tank Location (X)
Tow Between		
8240XL	**7,000 lbs (3,182 kg) maximum**	**30 inches (76 cm)**
8240XL/HD Clevis	**12,000 lbs (5,454 kg) maximum**	**30 inches (76 cm)**
8300XL	**7,000 lbs (3,182 kg) maximum**	**30 inches (76 cm)**
8300XL/HD Clevis	**10,500 lbs (4,773 kg) maximum**	**30 inches (76 cm)**
8370XL/HD Clevis	**7,000 lbs (3,182 kg) maximum**	**25 inches (63 cm)**
Tow Behind		
8240XL	**13,500 lbs (6,136 kg) maximum**	**30 inches (76 cm)**
8300XL	**12,000 lbs (5,454 kg) maximum**	**30 inches (76 cm)**
8370XL	**9,000 lbs (4,090 kg) maximum**	**25 inches (63 cm)**
Note: Above capacities are based on 32 inch tires.		
8435XL	**17,000 lbs (7,711 kg) maximum**	**30 inches (76 cm)**

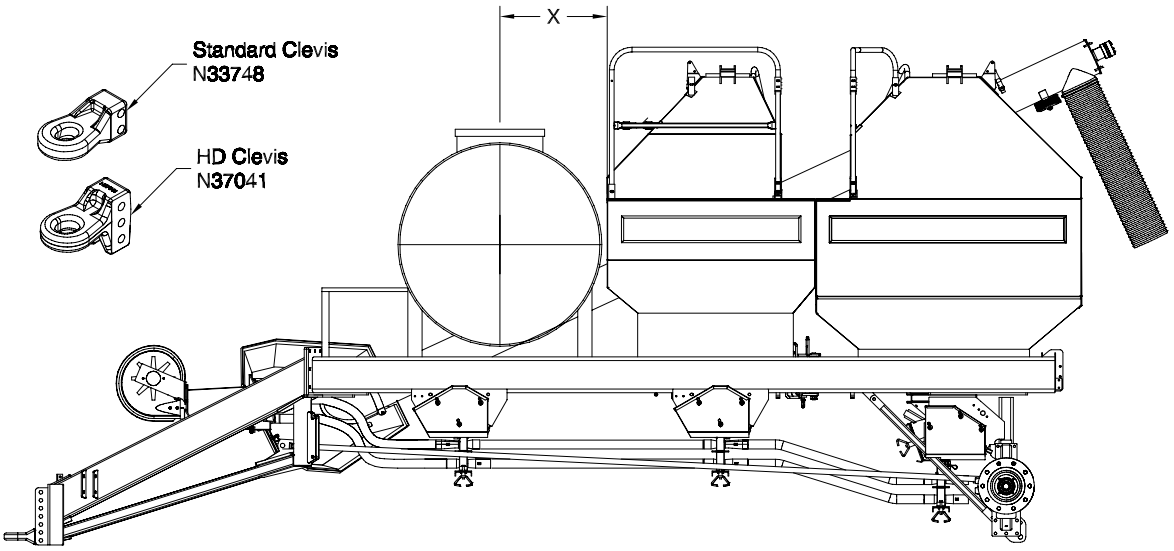

Reference: Optical Blockage Module

The optical blockage module N37011 has been replaced with optical blockage module N34989. Blockage module N34989 also requires a different mounting bracket N44013 to attach it to the frame of the seeding unit.

Note: Optical blockage module N34989 is interchangeable with optical blockage module N37011.



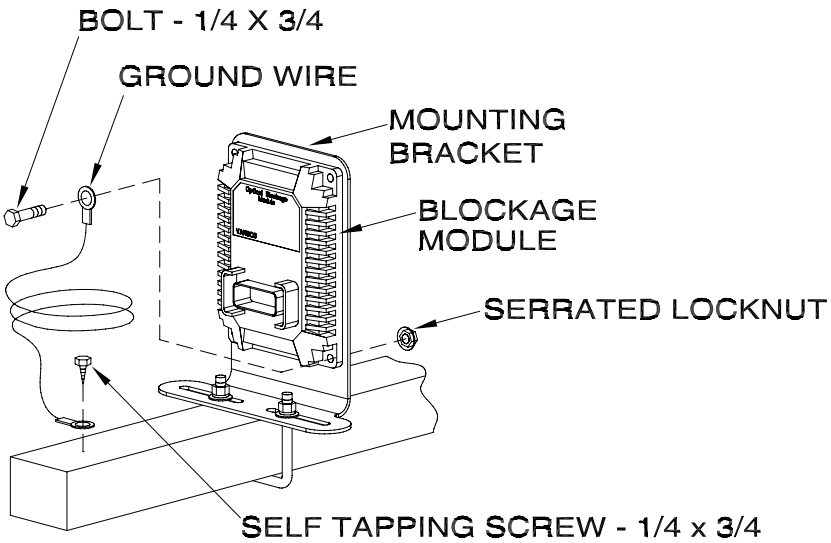

Reference: Meter Shaft Assembly

It has come to Morris' attention that some meter shafts are being incorrectly assembled causing excessive torque to turn metering shaft once assemblied.

1. Use equal size and number of shims on both ends to keep meter wheels centered in cups.

Note: If too many shims are used on the shaft ends the wheels could be compressed (ballooned) causing shaft assembly to be tight in metering body requiring excessive torque to turn.

2. Check meter shaft for ease of rotation. The wheels should turn easily when rotated by hand. **Maximum torque on assembled meter shaft is 50 inch pounds (4 ft. lb.).** If too tight then back off bolts (2) 3/8" x 1" lg on the Meter shaft end plate and install N37210 shims as required. Retighten bolts and check ease of rotation.

   If they are difficult to turn after shims have been added, alignment of the backing plates is required. With meter wheels assembled in the body, loosen the 1/4" x 1/2" Lg hex bolts securing the backing plates to the meter body. Rotate meter wheels in direction of rotation (3 to 4 turns) until backing plates align with the wheels. Secure 1/4" x 1/2" Lg bolts starting from right, and alternate from bottom to top bolt.

Note: Torque 1/4" bolts to 5 ft. lb.

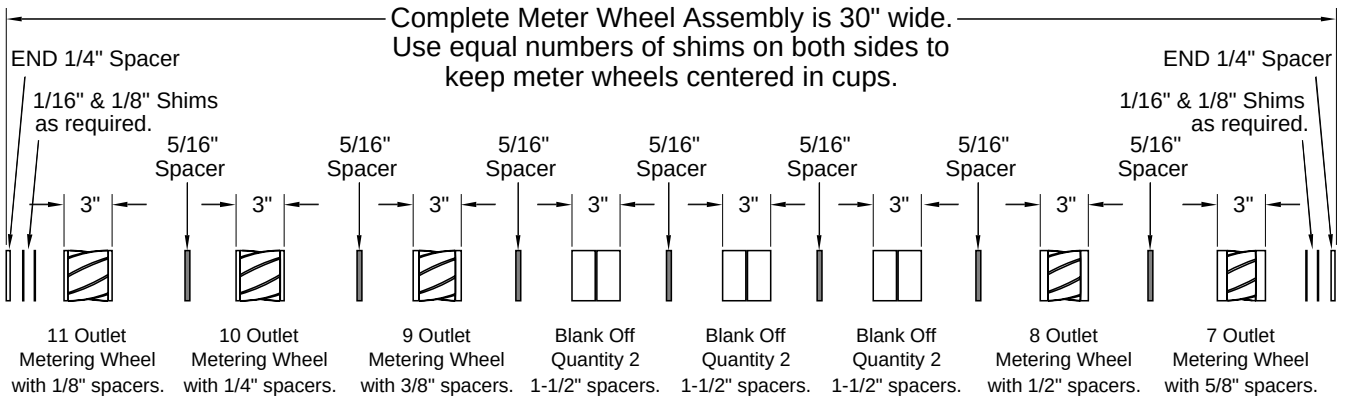

Reference: VRT Valve

Morris has integrated a new valve body into the VRT system. The solenoid valves used in the new valve body are not interchangeable with the previously used valve body. The parts break down for these new valve bodies can be found in the 8XL Parts Manual part number N42302 revision-4 dated March 2009.

The valve bodies can be identified by the pattern of the end plugs and by the solenoids. The solenoids on the old style valve have an aluminum spacer collar and the solenoids on the new style valve does not.

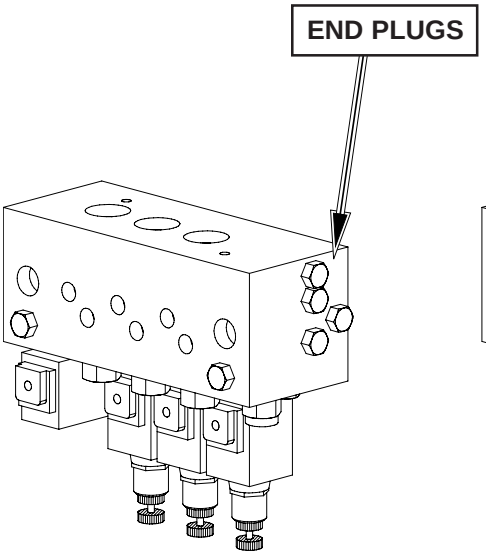

Old Valve

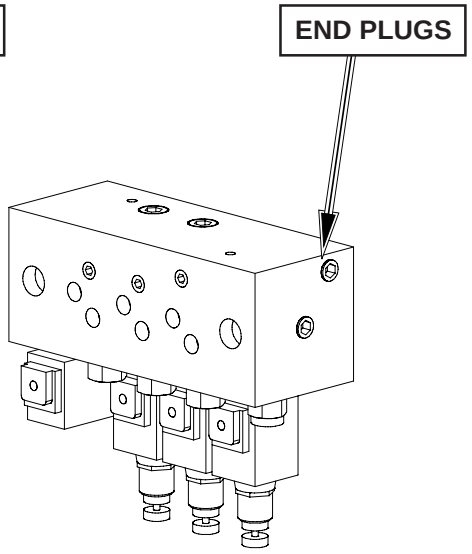

New Valve

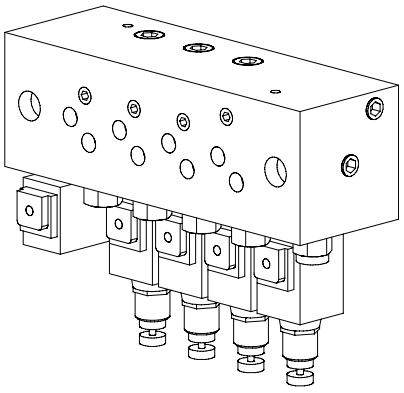
New 4 bank Valve



Solenoid for old valve


Solenoid for new valve

Reference: Auger Hopper

It has come to Morris' attention that some hoppers on the 8XL Series are difficult to turn the on auger tube. To correct this remove hopper retaining washer and slot the hole a 1/4" on top side.



Reference: VRT Hydraulic Valve

Morris has introduced a new solenoid valve N47440 for the VRT 3-valve manifold N45505 and 4-valve manifold N45195. This new solenoid valve provides a greater range of performance for the metering system to meet the needs of producers.

Upon initial setup the preload of the valves must be set to match the tractor hydraulics.

Note: Tanks must be empty.

Zero the shaft hydraulic motors by using the following procedure:

- Ensure there is no product in any tanks.
- Warm up hydraulic system by running fan system for 5-10 minutes. Hydraulic hoses at fan motor should be warm to touch.
- **Turn OFF** Monitor, VRT Console and Controller.
- Start with ***all*** adjusting screws ***turned out fully***.
- Adjust each valve individually by following the procedure below:
  - Start with rear tank first adjusting screw '3' for three valve bank or screw '4' for four valve bank.
  - Remove cap nut and then loosen jam nut.
  - Turn adjusting screw IN until motor starts to turn.
  - Allow motor to turn for 1-2 minutes to allow for motor to reach optimal operating temperature.
  - Then turn adjusting screw OUT until motor stops turning.
  - Turn adjusting screw OUT an additional 1/2 turn.
  - Tighten jam nut to secure adjusting screw in place. Replace cap nut.
- Repeat the above procedure for the other valves.

Note: It is recommended to check the zero of the valves at the start of each season or if a different tractor is used on the system.



New Solenoid Valve N47440



Remove Cap Nut



Loosen Jam Nut



Adjusting Screw

Reference: Fan Orbit Motor

Before running the fan for the first time, the housing of the orbit motor must be filled with hydraulic oil through the case drain connection. Failure to follow this procedure could result in motor failure.

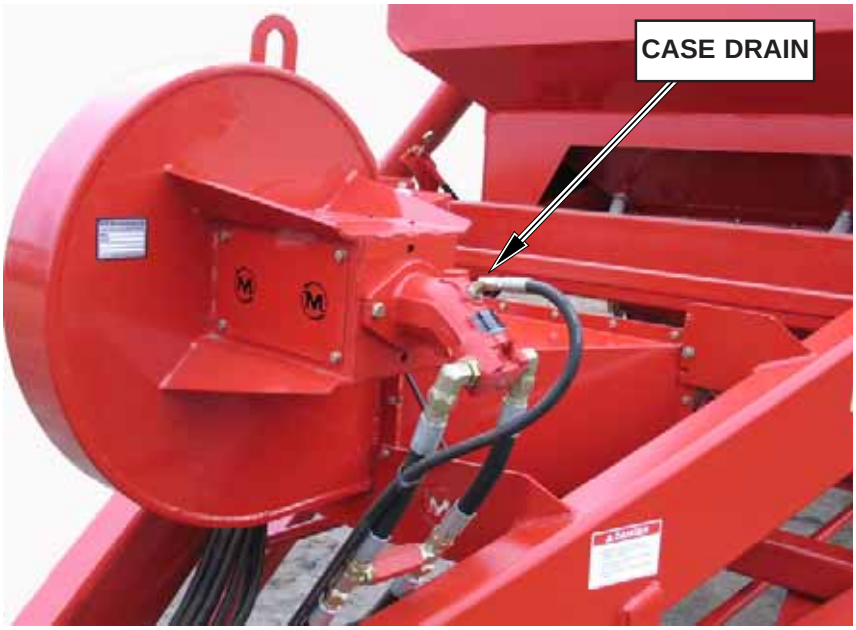



Reference: Auger Motor Bolt

The bolt retaining the auger flighting to the motor is 3/8 x 3 1/4 long and is secured with a spacer bushing and locknut. This is to ensure the auger flighting is fully retained by the shoulder of the bolt and not by the threads.

Item	Part No.	Description	Qty
1	N47419	Hex Bolt - 3/8 x 3 1/4 Lg	1
2	N19155	Spacer - 0.385 ID x 0.625 OD x 1/2 Lg	1
3	W21476	Two Way Locknut - 3/8	1

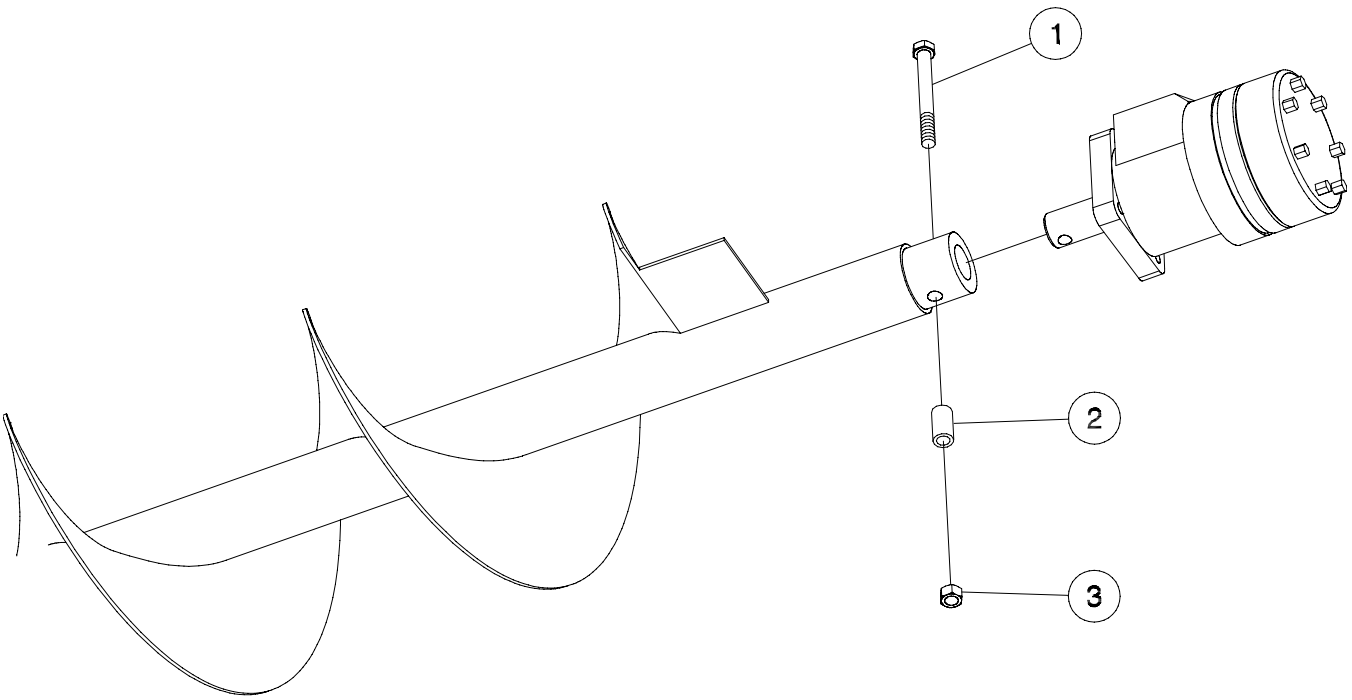

Reference: VRT Motor Seal Kits

It has come to Morris' attention that the two versions of the Danfoss hydraulic orbit motor being used on the VRT meter drives require different seal kits.

The newer Series 1 motors use N48071 seal kit and the Series 0 motors continue to use the N32517 seal kit.

The motor series can be determined by the flange mount as illustrated below.

Note: It is possible to have both series motors on the same Air Cart, so check each motor to determine which seal kits are required.



SERIES 0 HAS REMOVABLE SPIGOT FLANGE.



SERIES 1 IS THE LATEST MODEL WITH COMMON BODY AND MOUNT.

Reference: Main Clutch Assembly

The main clutch used on Morris' 8XL series Air Carts has a new angled connector for attaching the power cable. This angle does not allow enough clearance to attach the power cable once the clutch is installed with the locking bracket attached as shown in photo 1.

In order to attach the power cable when installing/replacing a new clutch the locking bracket must be attached to the clutch plate side as shown in photo 2. Note additional care must be taken to ensure stop bracket does not contact clutch plate.



Photo 1



Photo 2

Reference: VRT Hydraulic Valve

Upon initial setup the preload of the solenoid valves on the VRT manifold must be set to match the tractor hydraulics. This process is called zeroing the meter shafts hydraulic motor drives.

Currently in the "Zeroing" process the instructions state to *"turn the adjusting screw OUT an additional 1/2 turn*" once the motor stops turning. With the square shaped solenoid valves the additional "1/2 turn out" may cause the motors to slowly turn backwards when stationary.

To eliminate this problem adjust the screw OUT until the motor stops turning and secure jam nut in place.

Note: Tanks must be empty during this process.

It is recommended to check the zero of the valves at the start of each season or if a different tractor is used on the system.

To zero the shaft of the hydraulic motors use the following procedure:

- Ensure there is no product in any tanks.
- Warm up hydraulic system by running fan system for 5-10 minutes. Hydraulic hoses at fan motor should be warm to touch.
- Turn OFF Monitor, VRT Console and Controller.
- Start with all adjusting screws turned out fully.
- Adjust each valve individually by following the procedure below:
- Start with rear tank first adjusting screw '3' for three valve bank or screw '4' for four valve bank.
- Remove cap nut and then loosen jam nut.
- Turn adjusting screw IN until motor starts to turn.
- Allow motor to turn for 1-2 minutes to allow for motor to reach optimal operating temperature.
- Then turn adjusting screw OUT until motor stops turning.
- Tighten jam nut to secure adjusting screw in place. Replace cap nut.
- Repeat the above procedure for the other valves.



Remove Cap Nut and Loosen Jam Nut



Adjusting Screw

Metric

Rate Calibration - Metric

- Ensure tires are at correct pressure.
- Determine Tire Circumference (Tc) as follows:
  - Check under normal field conditions with tanks half full.
  - Mark tire and starting point.
  - Drive air cart 10 revolutions of tire in a straight line.
  - Mark ending point.
  - Measure distance from starting point to ending point and divide by 10 to get the rolling circumference of the tire (Tc).

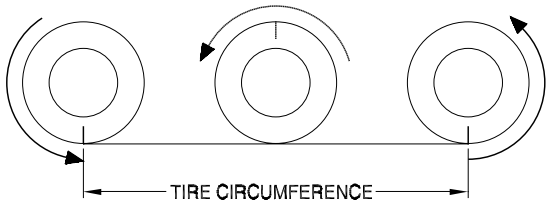

- Calculate the number of rotations (R) of the calibration crank for 1/10 Hectare. Record value below for future reference.
- Calculate required tire sprocket size (Ts) and to ensure correct sprockets are installed on the Air Cart. Record value below for future reference.

Note: Due to ratios the value may not be a whole number and should be rounded to nearest value.

- Calculate the monitor PP400 setting. Record value below for future reference. Change monitor to new PP400 value as outlined under *"Changing Monitor Settings"* under Monitor Section.

Example:

For a 8370 with 800/65 R32 Tires and a 51ft (15.54 m) wide seeding tool (W) with:

The measured Tire Circumference (Tc) was 5.375 meters.

For 32" Rim

Crank Rotations (R) = (1574/W)/Tc
= (1574/15.54)/5.375
= 18.84

Monitor PP400 = 2048.256/Tc
= 2048.256/5.375
= 381

Tire Specifications

Tire	Style	Rating	Pressure			
			8240 8300 BH 8336 BH	8300 BT 8336 BT 8370 8425	BH 8435 8630 8650	BT 8435 8630 8650
21.5 x 16.1	Soft Trac	10 ply	193.1 kPa	-	-	-
21.5 x 16.1	Lug	12 ply	165.5 kPa	-	-	-
560/65 D24	Soft Trac	LI 140	131 kPa	165.5 kPa	-	-
500/70 R24	Lug	LI 157	137.9 kPa	172.4 kPa	-	-
23.1 x 26	AWT	12 ply	165.5 kPa	-	-	-
23.1 x 26	Rice	10 ply	193.1 kPa	-	-	-
28LR26	Lug	165 A8	-	-	124.1 kPa	-
480/70R30 Quad Steer	Lug	LI 152	179.3 kPa	179.3 kPa	-	-
30.5 x 32	AWT	12 ply	137.9 kPa	165.5 kPa	-	-
800/65 R32	Lug	LI 172	103.4 kPa	137.9 kPa	-	-
800/65 R32 Dual Wheels	Lug	LI 172	-	-	-	137.9 kPa
900/60 R32	Lug	176 A8	117.2 kPa	117.2 kPa	179.3 kPa	-
520/85 R38 Dual Wheels	Lug	155 A8	-	-	137.9 kPa	-

*BH - Tow Behind only *BT - Tow Between only

Calculation Formulas - Metric

Rotations of Crank for 1/10 Hectare:

For 26" Rim = (1200/W)/Tc

For 32" Rim = (1575/W)/Tc

For 38" Rim = (1575/W)/Tc **R** = _____

Tire Sprocket Size:

For 26" Rim = 110.744/Tc

For 32" Rim = 152.196/Tc

For 38" Rim = 152.196/Tc **Ts** = _____

Monitor PP400 Setting:

For 26" Rim = 1428.5976/Tc

For 32" Rim = 2048.256/Tc

For 38" Rim = 2048.256/Tc **PP400 =** _____

Tc = Tire Circumference measured in meters

W = Working Width measured in meters

Metric Rate Calibration Chart

8240 Tow Between and Tow Behind - Standard Tires
8300 & 8336 Tow Behind - Standard Tires

Calibration table based on 1/10 of an Hectare
W = machine width (m)
F = Optional Hectare Tally Factor = 56/R
R = Crank Rotations # turns
for 1/10 Hectare = 262.4/W for 23.1 x 26 AWT Tires at 193 kPa
for 1/10 Hectare = 238.6/W for 23.1 x 26 Rice Tires at 165 kPa

D = Distance required for 1/10 Hectare (metres) = 1000/W

Important

The table below lists Nominal values. For more accurate results follow the procedure under "Rate Calibration" in the Operation Section.

$$\text{New Crank Rotations} = \left(\frac{D}{\text{Tire Circumference (m)}} \right) \times \frac{48}{15} \times \frac{18}{48} = \underline{\qquad\qquad}$$

EIGHT Series XL Air Cart

METRIC CRANK CALIBRATION TABLE

Width [W]		Air Cart Model: 8240 Tow Between, 8240, 8300 & 8336 Tow Behind				Distance [D]	Width [W]		Air Cart Model: 8240 Tow Between, 8240, 8300 & 8336 Tow Behind				Distance [D]
		AWT Tire 23.1 x 26 12 ply at 193 kPa		RICE Tire 23.1 x 26 10 ply at 165 kPa					AWT Tire 23.1 x 26 12 ply at 193 kPa		RICE Tire 23.1 x 26 10 ply at 165 kPa		
(ft)	(m)	[R]	[F]	[R]	[F]	(m)	(ft)	(m)	[R]	[F]	[R]	[F]	(m)
21	6.405	40.97	1.37	37.25	1.50	156.13	51	15.56	16.87	3.32	15.34	3.65	64.29
22	6.71	39.11	1.43	35.56	1.57	149.03	52	15.86	16.54	3.38	15.04	3.72	63.05
23	7.02	37.41	1.50	34.01	1.65	142.55	53	16.17	16.23	3.45	14.76	3.79	61.86
24	7.32	35.85	1.56	32.60	1.72	136.61	54	16.47	15.93	3.51	14.49	3.87	60.72
25	7.63	34.41	1.63	31.29	1.79	131.15	55	16.78	15.64	3.58	14.22	3.94	59.61
26	7.93	33.09	1.69	30.09	1.86	126.10	56	17.08	15.36	3.65	13.97	4.01	58.55
27	8.24	31.86	1.76	28.97	1.93	121.43	57	17.39	15.09	3.71	13.72	4.08	57.52
28	8.54	30.73	1.82	27.94	2.00	117.10	58	17.69	14.83	3.78	13.49	4.15	56.53
29	8.85	29.67	1.89	26.98	2.08	113.06	59	18.00	14.58	3.84	13.26	4.22	55.57
30	9.15	28.68	1.95	26.08	2.15	109.29	60	18.30	14.34	3.91	13.04	4.30	54.64
31	9.46	27.75	2.02	25.24	2.22	105.76	61	18.61	14.10	3.97	12.82	4.37	53.75
32	9.76	26.89	2.08	24.45	2.29	102.46	62	18.91	13.88	4.04	12.62	4.44	52.88
33	10.07	26.07	2.15	23.71	2.36	99.35	63	19.22	13.66	4.10	12.42	4.51	52.04
34	10.37	25.30	2.21	23.01	2.43	96.43	64	19.52	13.44	4.17	12.22	4.58	51.23
35	10.68	24.58	2.28	22.35	2.51	93.68	65	19.83	13.24	4.23	12.04	4.65	50.44
36	10.98	23.90	2.34	21.73	2.58	91.07	66	20.13	13.04	4.30	11.85	4.72	49.68
37	11.29	23.25	2.41	21.14	2.65	88.61	67	20.44	12.84	4.36	11.68	4.80	48.94
38	11.59	22.64	2.47	20.59	2.72	86.28	68	20.74	12.65	4.43	11.50	4.87	48.22
39	11.90	22.06	2.54	20.06	2.79	84.07	69	21.05	12.47	4.49	11.34	4.94	47.52
40	12.20	21.51	2.60	19.56	2.86	81.97	70	21.35	12.29	4.56	11.18	5.01	46.84
41	12.51	20.98	2.67	19.08	2.93	79.97	71	21.66	12.12	4.62	11.02	5.08	46.18
42	12.81	20.48	2.73	18.63	3.01	78.06	72	21.96	11.95	4.69	10.87	5.15	45.54
43	13.12	20.01	2.80	18.19	3.08	76.25	73	22.27	11.79	4.75	10.72	5.23	44.91
44	13.42	19.55	2.86	17.78	3.15	74.52	74	22.57	11.63	4.82	10.57	5.30	44.31
45	13.73	19.12	2.93	17.38	3.22	72.86	75	22.88	11.47	4.88	10.43	5.37	43.72
46	14.03	18.70	2.99	17.01	3.29	71.28	76	23.18	11.32	4.95	10.29	5.44	43.14
47	14.34	18.30	3.06	16.64	3.36	69.76	77	23.49	11.17	5.01	10.16	5.51	42.58
48	14.64	17.92	3.12	16.30	3.44	68.31	78	23.79	11.03	5.08	10.03	5.58	42.03
49	14.95	17.56	3.19	15.97	3.51	66.91	79	24.10	10.89	5.14	9.90	5.66	41.50
50	15.25	17.21	3.25	15.65	3.58	65.57	80	24.40	10.75	5.21	9.78	5.73	40.98

Metric Rate Calibration Chart

8240 Tow Between and Tow Behind - Optional Tires
8300 & 8336 Tow Behind - Optional Tires

Calibration table based on 1/10 of an Hectare
W = machine width (m)
F = Optional Hectare Tally Factor = 56/R
R = Crank Rotations # turns
for 1/10 Hectare = 293.24/W for 30.5 x 32 12 ply AWT Tires at 138 kPa
for 1/10 Hectare = 296.72/W for 30.5 x 32 14 ply Lug Tires at 138 kPa
for 1/10 Hectare = 294.01/W for 800/65 R32 L1 172 Lug Tire at 103 kPa

D = Distance required for 1/10 Hectare (metres) = 1000/W

$$\text{New Crank Rotations} = \left(\frac{D}{\text{Tire Circumference(m)}} \right) \times \frac{63}{15} \times \frac{18}{48} = \_\_\_\_\_$$

Important

The table below lists Nominal values. For more accurate results follow the procedure under "Rate Calibration" in the Operation Section.

EIGHT Series XL Air Cart
METRIC CRANK CALIBRATION TABLE

Width		Air Cart Model						Distance	Width		Air Cart Model						Distance
		8240 Tow Between									8240 Tow Between						
		8240, 8300 & 8336 Tow Behind									8240, 8300 & 8336 Tow Behind						
[W]		AWT Tire 30.5 x 32 12 ply at 138 kPa		LUG Tire 30.5 x 32 14 ply at 138 kPa		LUG Tire 800/65 R32 L1 172 at 103 kPa		[D]	[W]		AWT Tire 30.5 x 32 12 ply at 138 kPa		LUG Tire 30.5 x 32 14 ply at 138 kPa		LUG Tire 800/65 R32 L1 172 at 103 kPa		[D]
(ft)	(m)	[R]	[F]	[R]	[F]	[R]	[F]	(m)	(ft)	(m)	[R]	[F]	[R]	[F]	[R]	[F]	(m)
21	6.41	45.78	1.22	46.33	1.21	45.90	1.22	156.13	54	16.47	17.80	3.15	18.02	3.11	17.85	3.14	60.72
22	6.71	43.70	1.28	44.22	1.27	43.82	1.28	149.03	55	16.78	17.48	3.20	17.69	3.17	17.53	3.20	59.61
23	7.02	41.80	1.34	42.30	1.32	41.91	1.34	142.55	56	17.08	17.17	3.26	17.37	3.22	17.21	3.25	58.55
24	7.32	40.06	1.40	40.54	1.38	40.17	1.39	136.61	57	17.39	16.87	3.32	17.07	3.28	16.91	3.31	57.52
25	7.63	38.46	1.46	38.91	1.44	38.56	1.45	131.15	58	17.69	16.58	3.38	16.77	3.34	16.62	3.37	56.53
26	7.93	36.98	1.51	37.42	1.50	37.08	1.51	126.10	59	18.00	16.30	3.44	16.49	3.40	16.34	3.43	55.57
27	8.24	35.61	1.57	36.03	1.55	35.70	1.57	121.43	60	18.30	16.02	3.49	16.21	3.45	16.07	3.49	54.64
28	8.54	34.34	1.63	34.74	1.61	34.43	1.63	117.10	61	18.61	15.76	3.55	15.95	3.51	15.80	3.54	53.75
29	8.85	33.15	1.69	33.55	1.67	33.24	1.68	113.06	62	18.91	15.51	3.61	15.69	3.57	15.55	3.60	52.88
30	9.15	32.05	1.75	32.43	1.73	32.13	1.74	109.29	63	19.22	15.26	3.67	15.44	3.63	15.30	3.66	52.04
31	9.46	31.01	1.81	31.38	1.78	31.10	1.80	105.76	64	19.52	15.02	3.73	15.20	3.68	15.06	3.72	51.23
32	9.76	30.05	1.86	30.40	1.84	30.12	1.86	102.46	65	19.83	14.79	3.79	14.97	3.74	14.83	3.78	50.44
33	10.07	29.13	1.92	29.48	1.90	29.21	1.92	99.35	66	20.13	14.57	3.84	14.74	3.80	14.61	3.83	49.68
34	10.37	28.28	1.98	28.61	1.96	28.35	1.98	96.43	67	20.44	14.35	3.90	14.52	3.86	14.39	3.89	48.94
35	10.68	27.47	2.04	27.80	2.01	27.54	2.03	93.68	68	20.74	14.14	3.96	14.31	3.91	14.18	3.95	48.22
36	10.98	26.71	2.10	27.02	2.07	26.78	2.09	91.07	69	21.05	13.93	4.02	14.10	3.97	13.97	4.01	47.52
37	11.29	25.98	2.16	26.29	2.13	26.05	2.15	88.61	70	21.35	13.73	4.08	13.90	4.03	13.77	4.07	46.84
38	11.59	25.30	2.21	25.60	2.19	25.37	2.21	86.28	71	21.66	13.54	4.14	13.70	4.09	13.58	4.12	46.18
39	11.90	24.65	2.27	24.94	2.24	24.72	2.27	84.07	72	21.96	13.35	4.19	13.51	4.14	13.39	4.18	45.54
40	12.20	24.04	2.33	24.32	2.30	24.10	2.32	81.97	73	22.27	13.17	4.25	13.33	4.20	13.21	4.24	44.91
41	12.51	23.45	2.39	23.73	2.36	23.51	2.38	79.97	74	22.57	12.99	4.31	13.15	4.26	13.03	4.30	44.31
42	12.81	22.89	2.45	23.16	2.42	22.95	2.44	78.06	75	22.88	12.82	4.37	12.97	4.32	12.85	4.36	43.72
43	13.12	22.36	2.50	22.62	2.48	22.42	2.50	76.25	76	23.18	12.65	4.43	12.80	4.37	12.68	4.42	43.14
44	13.42	21.85	2.56	22.11	2.53	21.91	2.56	74.52	77	23.49	12.49	4.48	12.63	4.43	12.52	4.47	42.58
45	13.73	21.37	2.62	21.62	2.59	21.42	2.61	72.86	78	23.79	12.33	4.54	12.47	4.49	12.36	4.53	42.03
46	14.03	20.90	2.68	21.15	2.65	20.96	2.67	71.28	79	24.10	12.17	4.60	12.31	4.55	12.20	4.59	41.50
47	14.34	20.46	2.74	20.70	2.71	20.51	2.73	69.76	80	24.40	12.02	4.66	12.16	4.61	12.05	4.65	40.98
48	14.64	20.03	2.80	20.27	2.76	20.08	2.79	68.31	81	24.71	11.87	4.72	12.01	4.66	11.90	4.71	40.48
49	14.95	19.62	2.85	19.85	2.82	19.67	2.85	66.91	82	25.01	11.72	4.78	11.86	4.72	11.76	4.76	39.98
50	15.25	19.23	2.91	19.46	2.88	19.28	2.90	65.57	83	25.32	11.58	4.83	11.72	4.78	11.61	4.82	39.50
51	15.56	18.85	2.97	19.08	2.94	18.90	2.96	64.29	84	25.62	11.45	4.89	11.58	4.84	11.48	4.88	39.03
52	15.86	18.49	3.03	18.71	2.99	18.54	3.02	63.05	85	25.93	11.31	4.95	11.45	4.89	11.34	4.94	38.57
53	16.17	18.14	3.09	18.36	3.05	18.19	3.08	61.86	86	26.23	11.18	5.01	11.31	4.95	11.21	5.00	38.12

Metric Rate Calibration Chart

8300, 8336, 8370 & 8425 Tow Between
8370 & 8425 Tow Behind

Calibration table based on 1/10 of an Hectare
W = machine width (m)
F = Optional Hectare Tally Factor = 56/R
R = Crank Rotations # turns
for 1/10 Hectare = 292.425/W for 30.5 x 32 12 ply AWT Tires at 165 kPa
for 1/10 Hectare = 292.751/W for 30.5 x 32 14 ply Lug Tires at 152 kPa
for 1/10 Hectare = 293.187/W for 800/65 R32 L1 172 Lug Tire at 138 kPa

D = Distance required for 1/10 Hectare (metres) = 1000/W

$$\text{New Crank Rotations} = \left(\frac{D}{\text{Tire Circumference(m)}} \right) \times \frac{63}{15} \times \frac{18}{48} = \underline{\qquad\qquad}$$

Important

The table below lists Nominal values. For more accurate results follow the procedure under "Rate Calibration" in the Operation Section.

EIGHT Series XL Air Cart
METRIC CRANK CALIBRATION TABLE

Width [W]		Air Cart Model: 8300, 8336, 8370 & 8425 Tow Between / 8370 & 8425 Tow Behind						Distance [D]	Width [W]		Air Cart Model: 8300, 8336, 8370 & 8425 Tow Between / 8370 & 8425 Tow Behind						Distance [D]
		AWT Tire 30.5 x 32 12 ply at 165 kPa		LUG Tire 30.5 x 32 14 ply at 152 kPa		LUG Tire 800/65 R32 L1 172 at 138 kPa					AWT Tire 30.5 x 32 12 ply at 165 kPa		LUG Tire 30.5 x 32 14 ply at 152 kPa		LUG Tire 800/65 R32 L1 172 at 138 kPa		
(ft)	(m)	[R]	[F]	[R]	[F]	[R]	[F]	(m)	(ft)	(m)	[R]	[F]	[R]	[F]	[R]	[F]	(m)
21	6.41	45.66	1.23	45.71	1.23	45.77	1.22	156.13	54	16.47	17.76	3.15	17.77	3.15	17.80	3.15	60.72
22	6.71	43.58	1.28	43.63	1.28	43.69	1.28	149.03	55	16.78	17.43	3.21	17.45	3.21	17.48	3.20	59.61
23	7.02	41.69	1.34	41.73	1.34	41.79	1.34	142.55	56	17.08	17.12	3.27	17.14	3.27	17.17	3.26	58.55
24	7.32	39.95	1.40	39.99	1.40	40.05	1.40	136.61	57	17.39	16.82	3.33	16.84	3.33	16.86	3.32	57.52
25	7.63	38.35	1.46	38.39	1.46	38.45	1.46	131.15	58	17.69	16.53	3.39	16.55	3.38	16.57	3.38	56.53
26	7.93	36.88	1.52	36.92	1.52	36.97	1.51	126.10	59	18.00	16.25	3.45	16.27	3.44	16.29	3.44	55.57
27	8.24	35.51	1.58	35.55	1.58	35.60	1.57	121.43	60	18.30	15.98	3.50	16.00	3.50	16.02	3.50	54.64
28	8.54	34.24	1.64	34.28	1.63	34.33	1.63	117.10	61	18.61	15.72	3.56	15.74	3.56	15.76	3.55	53.75
29	8.85	33.06	1.69	33.10	1.69	33.15	1.69	113.06	62	18.91	15.46	3.62	15.48	3.62	15.50	3.61	52.88
30	9.15	31.96	1.75	31.99	1.75	32.04	1.75	109.29	63	19.22	15.22	3.68	15.24	3.68	15.26	3.67	52.04
31	9.46	30.93	1.81	30.96	1.81	31.01	1.81	105.76	64	19.52	14.98	3.74	15.00	3.73	15.02	3.73	51.23
32	9.76	29.96	1.87	29.99	1.87	30.04	1.86	102.46	65	19.83	14.75	3.80	14.77	3.79	14.79	3.79	50.44
33	10.07	29.05	1.93	29.09	1.93	29.13	1.92	99.35	66	20.13	14.53	3.85	14.54	3.85	14.56	3.84	49.68
34	10.37	28.20	1.99	28.23	1.98	28.27	1.98	96.43	67	20.44	14.31	3.91	14.33	3.91	14.35	3.90	48.94
35	10.68	27.39	2.04	27.42	2.04	27.46	2.04	93.68	68	20.74	14.10	3.97	14.12	3.97	14.14	3.96	48.22
36	10.98	26.63	2.10	26.66	2.10	26.70	2.10	91.07	69	21.05	13.90	4.03	13.91	4.03	13.93	4.02	47.52
37	11.29	25.91	2.16	25.94	2.16	25.98	2.16	88.61	70	21.35	13.70	4.09	13.71	4.08	13.73	4.08	46.84
38	11.59	25.23	2.22	25.26	2.22	25.30	2.21	86.28	71	21.66	13.50	4.15	13.52	4.14	13.54	4.14	46.18
39	11.90	24.58	2.28	24.61	2.28	24.65	2.27	84.07	72	21.96	13.32	4.21	13.33	4.20	13.35	4.19	45.54
40	12.20	23.97	2.34	24.00	2.33	24.03	2.33	81.97	73	22.27	13.13	4.26	13.15	4.26	13.17	4.25	44.91
41	12.51	23.38	2.39	23.41	2.39	23.45	2.39	79.97	74	22.57	12.96	4.32	12.97	4.32	12.99	4.31	44.31
42	12.81	22.83	2.45	22.85	2.45	22.89	2.45	78.06	75	22.88	12.78	4.38	12.80	4.38	12.82	4.37	43.72
43	13.12	22.30	2.51	22.32	2.51	22.36	2.51	76.25	76	23.18	12.62	4.44	12.63	4.43	12.65	4.43	43.14
44	13.42	21.79	2.57	21.81	2.57	21.85	2.56	74.52	77	23.49	12.45	4.50	12.47	4.49	12.48	4.49	42.58
45	13.73	21.31	2.63	21.33	2.63	21.36	2.62	72.86	78	23.79	12.29	4.56	12.31	4.55	12.32	4.54	42.03
46	14.03	20.84	2.69	20.87	2.68	20.90	2.68	71.28	79	24.10	12.14	4.61	12.15	4.61	12.17	4.60	41.50
47	14.34	20.40	2.75	20.42	2.74	20.45	2.74	69.76	80	24.40	11.98	4.67	12.00	4.67	12.02	4.66	40.98
48	14.64	19.97	2.80	20.00	2.80	20.03	2.80	68.31	81	24.71	11.84	4.73	11.85	4.73	11.87	4.72	40.48
49	14.95	19.57	2.86	19.59	2.86	19.62	2.85	66.91	82	25.01	11.69	4.79	11.71	4.78	11.72	4.78	39.98
50	15.25	19.18	2.92	19.20	2.92	19.23	2.91	65.57	83	25.32	11.55	4.85	11.56	4.84	11.58	4.84	39.50
51	15.56	18.80	2.98	18.82	2.98	18.85	2.97	64.29	84	25.62	11.41	4.91	11.43	4.90	11.44	4.89	39.03
52	15.86	18.44	3.04	18.46	3.03	18.49	3.03	63.05	85	25.93	11.28	4.96	11.29	4.96	11.31	4.95	38.57
53	16.17	18.09	3.10	18.11	3.09	18.14	3.09	61.86	86	26.23	11.15	5.02	11.16	5.02	11.18	5.01	38.12

Metric Rate Calibration Chart

8435, 8630 and 8650 - Standard Tire
All Other Models - Optional Tire

Calibration table based on 1/10 of an Hectare
W = machine width (m)
F = Optional Hectare Tally Factor = 56/R
R = Crank Rotations # turns
for 1/10 Hectare = 274.13/W for 900/60 R32 176 A8 Tires @ 117 kPa

D = Distance required for 1/10 Hectare (metres) = 1000/W

$$\text{New Crank Rotations} = \left(\frac{D}{\text{Tire Circumference}} \right) \times \frac{63}{15} \times \frac{18}{48} = \underline{\qquad}$$

Important

The table below lists Nominal values. For more accurate results follow the procedure under "Rate Calibration" in the Operation Section.

EIGHT Series XL Air Cart

METRIC CRANK CALIBRATION TABLE

Width [W]		Air Cart Model All Models LUG Tire 900/60 R32 176 A8 at 117 kPa		Distance [D]	Width [W]		Air Cart Model All Models LUG Tire 900/60 R32 176 A8 at 117 kPa		Distance [D]
(ft)	(m)	[R]	[F]	(m)	(ft)	(m)	[R]	[F]	(m)
21	6.41	42.80	1.31	156.13	54	16.47	16.64	3.36	60.72
22	6.71	40.85	1.37	149.03	55	16.78	16.34	3.43	59.61
23	7.02	39.08	1.43	142.55	56	17.08	16.05	3.49	58.55
24	7.32	37.45	1.50	136.61	57	17.39	15.77	3.55	57.52
25	7.63	35.95	1.56	131.15	58	17.69	15.50	3.61	56.53
26	7.93	34.57	1.62	126.10	59	18.00	15.23	3.68	55.57
27	8.24	33.29	1.68	121.43	60	18.30	14.98	3.74	54.64
28	8.54	32.10	1.74	117.10	61	18.61	14.73	3.80	53.75
29	8.85	30.99	1.81	113.06	62	18.91	14.50	3.86	52.88
30	9.15	29.96	1.87	109.29	63	19.22	14.27	3.93	52.04
31	9.46	28.99	1.93	105.76	64	19.52	14.04	3.99	51.23
32	9.76	28.09	1.99	102.46	65	19.83	13.83	4.05	50.44
33	10.07	27.24	2.06	99.35	66	20.13	13.62	4.11	49.68
34	10.37	26.43	2.12	96.43	67	20.44	13.41	4.17	48.94
35	10.68	25.68	2.18	93.68	68	20.74	13.22	4.24	48.22
36	10.98	24.97	2.24	91.07	69	21.05	13.03	4.30	47.52
37	11.29	24.29	2.31	88.61	70	21.35	12.84	4.36	46.84
38	11.59	23.65	2.37	86.28	71	21.66	12.66	4.42	46.18
39	11.90	23.05	2.43	84.07	72	21.96	12.48	4.49	45.54
40	12.20	22.47	2.49	81.97	73	22.27	12.31	4.55	44.91
41	12.51	21.92	2.55	79.97	74	22.57	12.15	4.61	44.31
42	12.81	21.40	2.62	78.06	75	22.88	11.98	4.67	43.72
43	13.12	20.90	2.68	76.25	76	23.18	11.83	4.74	43.14
44	13.42	20.43	2.74	74.52	77	23.49	11.67	4.80	42.58
45	13.73	19.97	2.80	72.86	78	23.79	11.52	4.86	42.03
46	14.03	19.54	2.87	71.28	79	24.10	11.38	4.92	41.50
47	14.34	19.12	2.93	69.76	80	24.40	11.23	4.98	40.98
48	14.64	18.72	2.99	68.31	81	24.71	11.10	5.05	40.48
49	14.95	18.34	3.05	66.91	82	25.01	10.96	5.11	39.98
50	15.25	17.98	3.12	65.57	83	25.32	10.83	5.17	39.50
51	15.56	17.62	3.18	64.29	84	25.62	10.70	5.23	39.03
52	15.86	17.28	3.24	63.05	85	25.93	10.57	5.30	38.57
53	16.17	16.96	3.30	61.86	86	26.23	10.45	5.36	38.12

Metric Rate Calibration Chart

8435, 8630 and 8650 - Optional Dual Tires

Calibration table based on 1/10 of an Hectare
W = machine width (m)
F = Optional Hectare Tally Factor = 56/R
R = Crank Rotations # turns
for 1/10 Hectare = 290.03/W for 520/85R38 155 A8 Tires @ 138 kPa

D = Distance required for 1/10 Hectare (metres) = 1000/W

$$\text{New Crank Rotations} = \left(\frac{D}{\text{Tire Circumference}} \right) \times \frac{63}{15} \times \frac{18}{48} = \_\_\_\_\_$$

Important

The table below lists Nominal values. For more accurate results follow the procedure under "Rate Calibration" in the Operation Section.

EIGHT Series XL Air Cart
METRIC CRANK CALIBRATION TABLE

Width [W]		Air Cart Model 8435, 8630 & 8650 LUG Tire - DUALS 520/85R38 155 A8 at 138 kPa		Distance [D]	Width [W]		Air Cart Model 8435, 8630 & 8650 LUG Tire - DUALS 520/85R38 155 A8 at 138 kPa		Distance [D]
(ft)	(m)	[R]	[F]	(m)	(ft)	(m)	[R]	[F]	(m)
21	6.41	45.28	1.24	156.13	54	16.47	17.61	3.18	60.72
22	6.71	43.22	1.30	149.03	55	16.78	17.29	3.24	59.61
23	7.02	41.34	1.35	142.55	56	17.08	16.98	3.30	58.55
24	7.32	39.62	1.41	136.61	57	17.39	16.68	3.36	57.52
25	7.63	38.04	1.47	131.15	58	17.69	16.40	3.42	56.53
26	7.93	36.57	1.53	126.10	59	18.00	16.12	3.47	55.57
27	8.24	35.22	1.59	121.43	60	18.30	15.85	3.53	54.64
28	8.54	33.96	1.65	117.10	61	18.61	15.59	3.59	53.75
29	8.85	32.79	1.71	113.06	62	18.91	15.34	3.65	52.88
30	9.15	31.70	1.77	109.29	63	19.22	15.09	3.71	52.04
31	9.46	30.67	1.83	105.76	64	19.52	14.86	3.77	51.23
32	9.76	29.72	1.88	102.46	65	19.83	14.63	3.83	50.44
33	10.07	28.82	1.94	99.35	66	20.13	14.41	3.89	49.68
34	10.37	27.97	2.00	96.43	67	20.44	14.19	3.95	48.94
35	10.68	27.17	2.06	93.68	68	20.74	13.98	4.00	48.22
36	10.98	26.41	2.12	91.07	69	21.05	13.78	4.06	47.52
37	11.29	25.70	2.18	88.61	70	21.35	13.58	4.12	46.84
38	11.59	25.02	2.24	86.28	71	21.66	13.39	4.18	46.18
39	11.90	24.38	2.30	84.07	72	21.96	13.21	4.24	45.54
40	12.20	23.77	2.36	81.97	73	22.27	13.03	4.30	44.91
41	12.51	23.19	2.41	79.97	74	22.57	12.85	4.36	44.31
42	12.81	22.64	2.47	78.06	75	22.88	12.68	4.42	43.72
43	13.12	22.11	2.53	76.25	76	23.18	12.51	4.48	43.14
44	13.42	21.61	2.59	74.52	77	23.49	12.35	4.53	42.58
45	13.73	21.13	2.65	72.86	78	23.79	12.19	4.59	42.03
46	14.03	20.67	2.71	71.28	79	24.10	12.04	4.65	41.50
47	14.34	20.23	2.77	69.76	80	24.40	11.89	4.71	40.98
48	14.64	19.81	2.83	68.31	81	24.71	11.74	4.77	40.48
49	14.95	19.41	2.89	66.91	82	25.01	11.60	4.83	39.98
50	15.25	19.02	2.94	65.57	83	25.32	11.46	4.89	39.50
51	15.56	18.65	3.00	64.29	84	25.62	11.32	4.95	39.03
52	15.86	18.29	3.06	63.05	85	25.93	11.19	5.01	38.57
53	16.17	17.94	3.12	61.86	86	26.23	11.06	5.06	38.12

Eight XL Air Cart
Suggested Parts Order List

Item	Part No.	Description	Qty
1	N13954	BEARING CONE	1
2	N13955	BEARING CONE	1
3	N25507	SEAL	1
4	N25508	SEAL KIT	1
5	N27411	FLANGETTE BEARING	1
6	N33549	INNER CONE	1
7	N33550	OUTER CONE	1
8	N33552	SEAL	1
9	N36017	CHAIN-#40-356 LINK W/CONN-	1
10	N36106	SPACER-METERWHL-1.5" THICK	2
11	N36110	SPACER-METERWHEEL-.063" TH	1
12	N36114	VALVE-COLLECTOR-8000 A/C	2
13	N36130	SEAL STRIP -.375 X 10.75"/	10
14	N36142	BOLT-NYLON HEX-.25 X .875"	2
15	N36143	NUT-NYLON-HEX FLANGE-.25"	2
16	N36145	COVER-BLANK OFF	1
17	N36146	RETAINER-DISTRIBUTION PIPE	1
18	N36225	BUSHING-CASTOR FORK	1
19	N36226	BUSHING	1
20	N36228	SEAL-DUST-4.5" AXLE #44913	1
21	N36266	CUP-FALSE BOTTOM-COLLECTOR	2
22	N36267	CUP-FALSE BOTTOM-COLLECTOR	1
23	N36274	HANDLE-FLAPPER-ASSY -DOUBL	2
24	N36357	PIN-PIVOT-LATCH(.75"DX2.62	1
25	N36447	CLAMP-HOSE-10.75"D(#HCASB-	1
26	N36455	SPACER(.875"ODX.635"IDX.28	1
27	N36456	PIN-PIVOT-LATCH(0.63"D X1.	1
28	N36486	PIN-LOCK-AUGER(.625"DIA X4	1
29	N36489	ADAPTER-STRAIGHT-MALE(7/8-	1
30	N36508	CONNECTOR-DRIVE-COLLECTOR	2
31	N36556	BOLT - .25 X .5" HEX UNC S	2
32	N36597	BOLT-.25 X .75" HEX UNC SS	2
33	N36718	METERWHEEL - 8 OUTLET	2
34	N36719	METERWHEEL - 9 OUTLET	2
35	N36731	SPACER-METERWHEEL-.125" TH	2
36	N36732	SPACER-METERWHEEL-.25" THI	2
37	N36738	CAP SCREW-FLAT HEX-.25 X 1	2
38	N36744	WASHER-.109"X1.875"ODX1.01	1
39	N36748	O-RING-2-236/V1476 (3.234"	2
40	N36766	SEAL-0.5" SHAFT(.875"BORE	2
41	N36813	RING-RETAINING (1" DIA)	2
42	N36900	BUSHING - SPACER (1.5" LG)	2
43	N36985	SHUTOFF PLATE - LONG	1
44	N36995	SHUTOFF PLATE - SHORT	1
45	N37065	WEAR WASHER	1
46	N37074	BUSHING-SPACER-UPPER	1
47	N37075	BUSHING-SPACER-LOWER	1
48	N37076	PIN-AUGER ARM PIVOT	1
49	N37077	SEAL-DUST #14821	1

Eight XL Air Cart Suggested Parts Order List			
Item	**Part No.**	**Description**	**Qty**
50	N37115	CLIP-RETAINER-METERBODY SH	2
51	N37811	HUB-COUPLER - 17" FAN ONLY	1
52	N37813	INSERT-COUPLER - 17" FAN ONLY	1
53	N37816	HUB-COUPLER - 17" FAN ONLY	1
54	R480034	HOSE .929 ID X 1.169 OD/FT.	75
55	R480055	HOSE-2.5 ID/FT.	100

TOPCON

Monitor Installation

1. Install A464 wire harness on tractor. Connect directly to the tractor battery. For the X20 connect A2400 Power Harness directly to the tractor battery.

Important: Battery leads from the Harness must be connected directly to the battery.

Do not connect directly to starter switch.

2. Mount monitor in tractor cab in an easily visible position.
3. For the EAGLE install A1779 Adapter Harness to monitor and attach to harness A464.

   For the X20 install A1258 Seed Rate Interface in cab in an accessable location to attach cables and harness to it. Connect cable A1734 to COMS 1 on X20 monitor and Console Connect Interface on Seed Rate Interface. Attach A2400 Power Harness to X20 monitor as shown.
4. If using a tow behind cart, route A467 extension harness over the tillage unit.

Important

Some tractors have a 24 volt starting system. Neither the monitor nor the VRT control will operate if they are connected to a 24 volt system. If in doubt, always connect to one battery only.



X20 Monitor - Shown

Important

Ensure harness extensions, when routed over the seeding tool and air cart, are clear of moving parts and protruding objects that may cut wires.



X20 Monitor

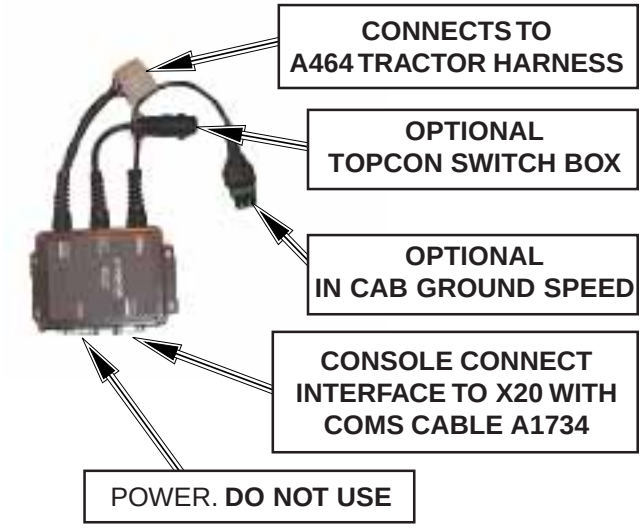

X20 Monitor - A1258 Seed Rate Interface

TOPCON - Continued

Monitor Harness

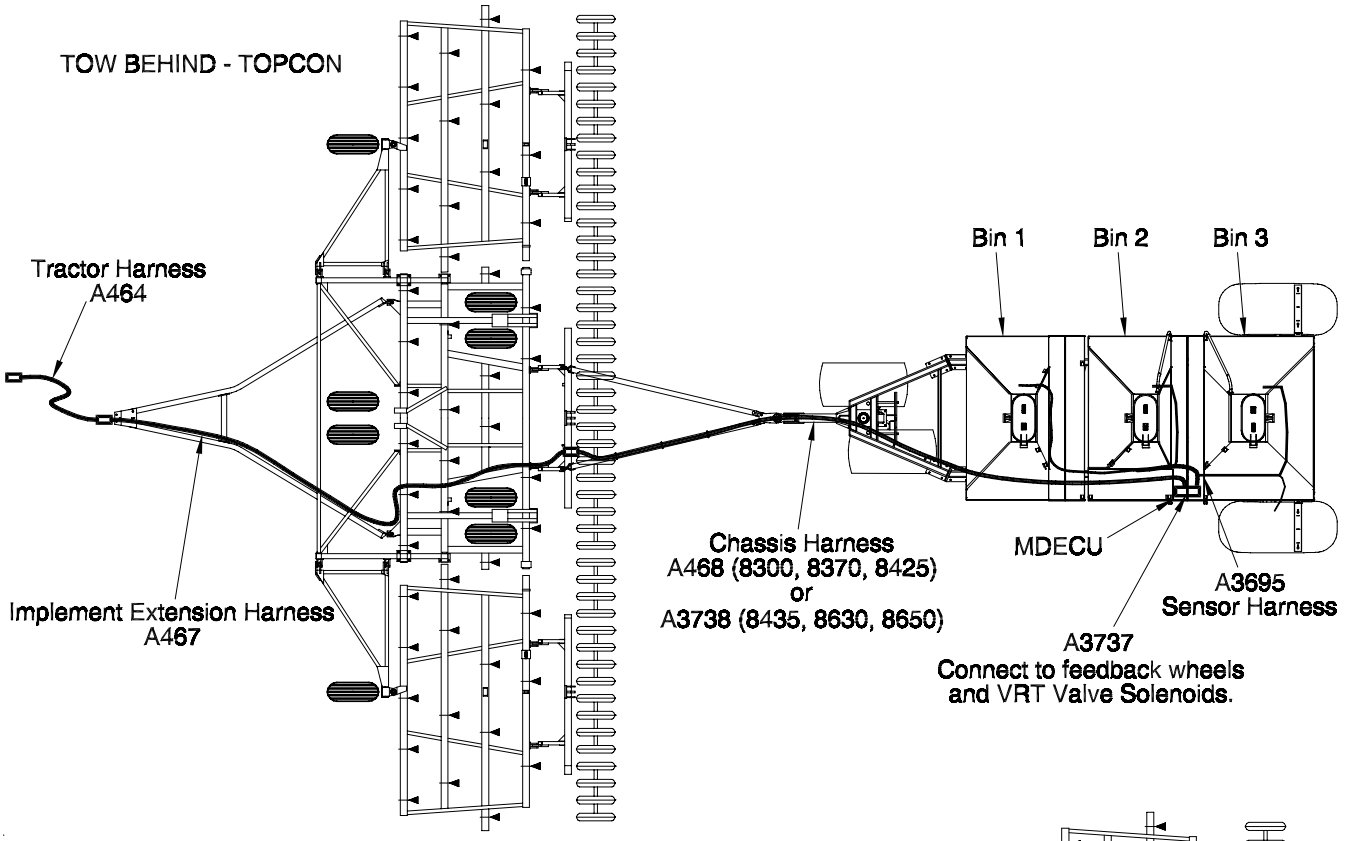

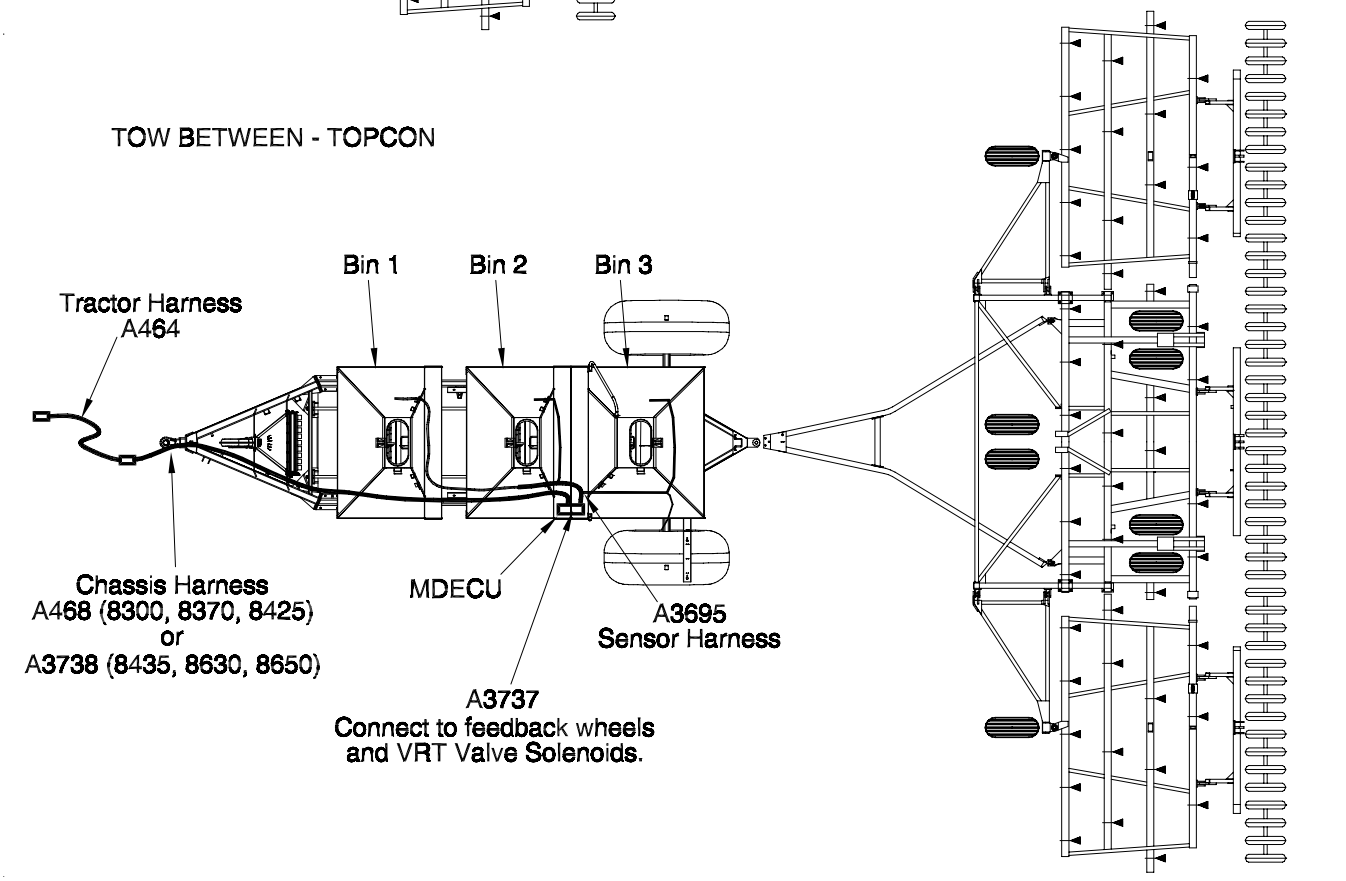

TOPCON - Continued

Monitor Harness - Blockage

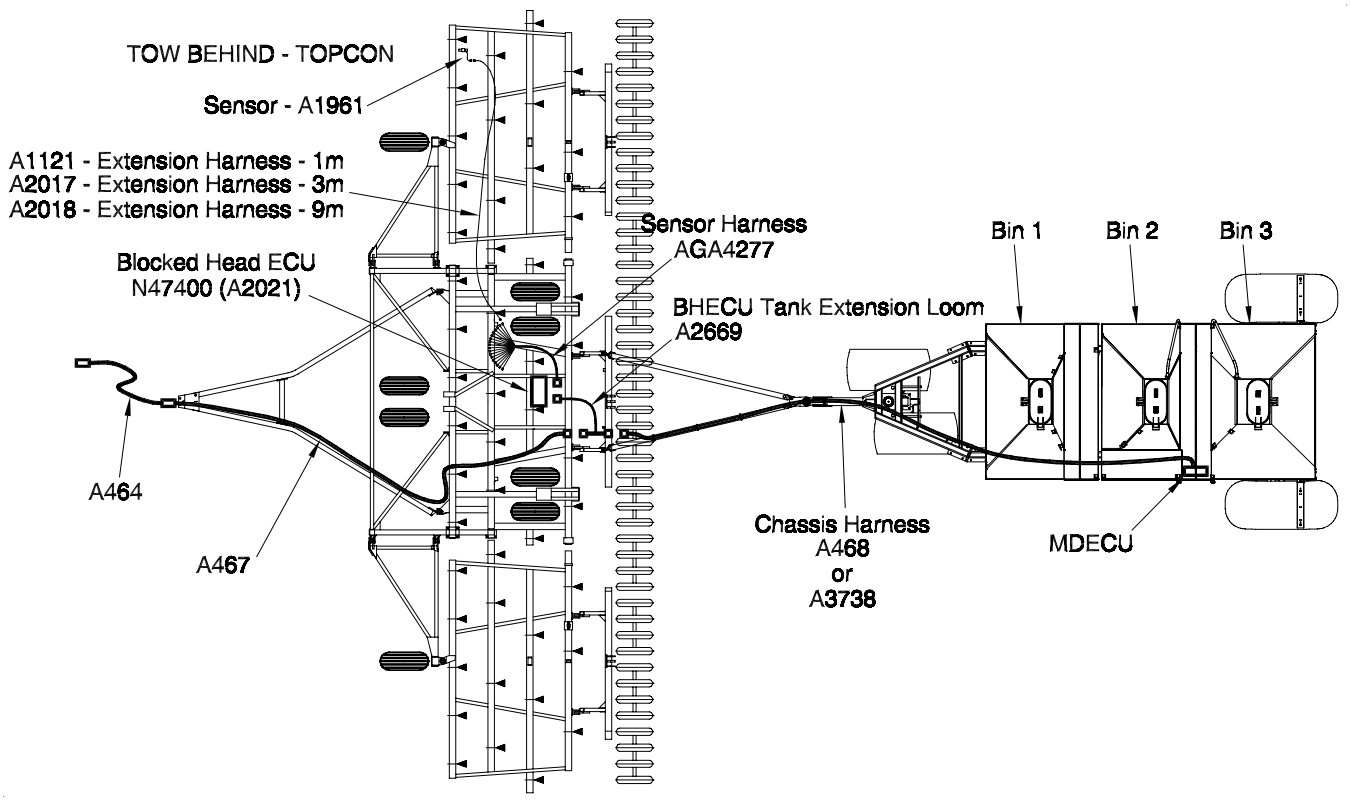

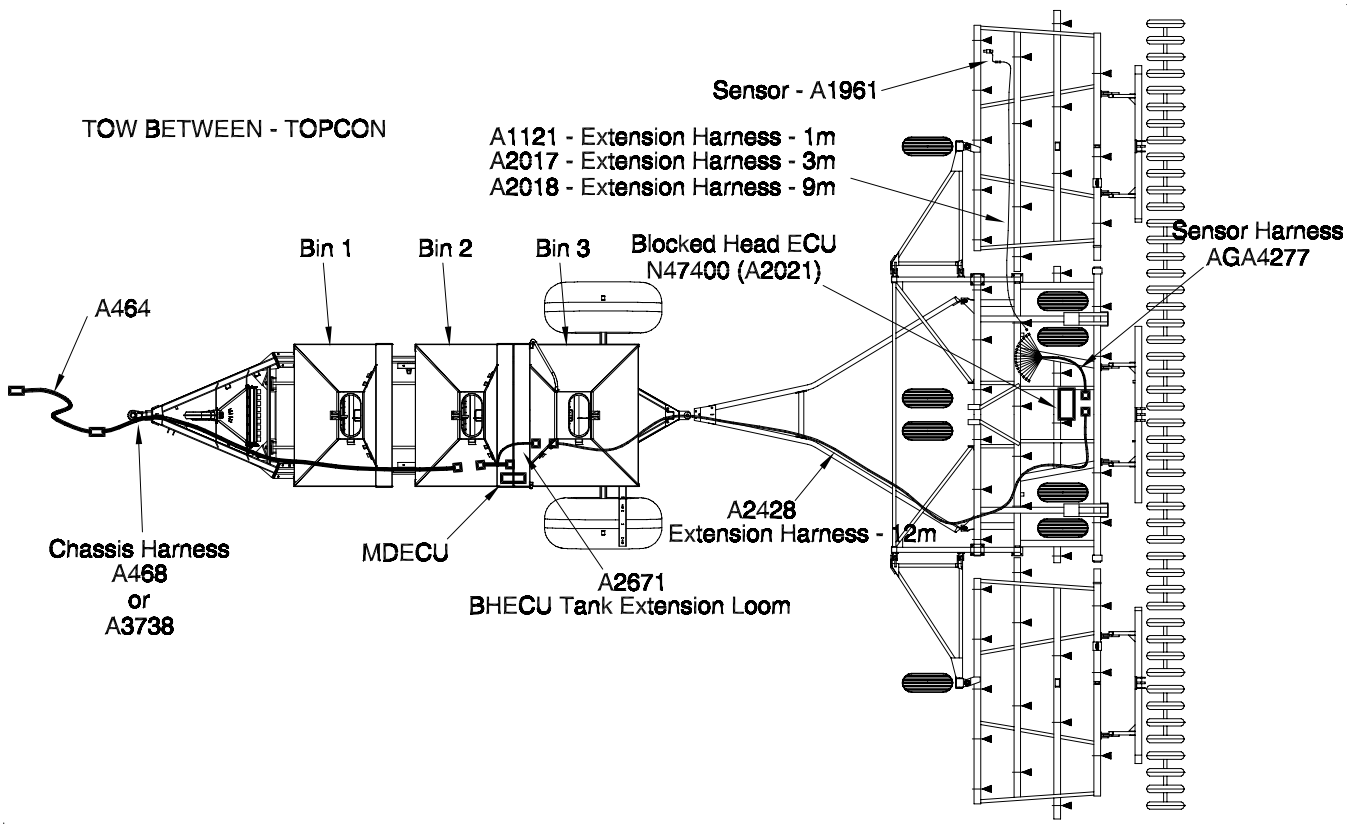

TOPCON - Continued

Tillage Switch

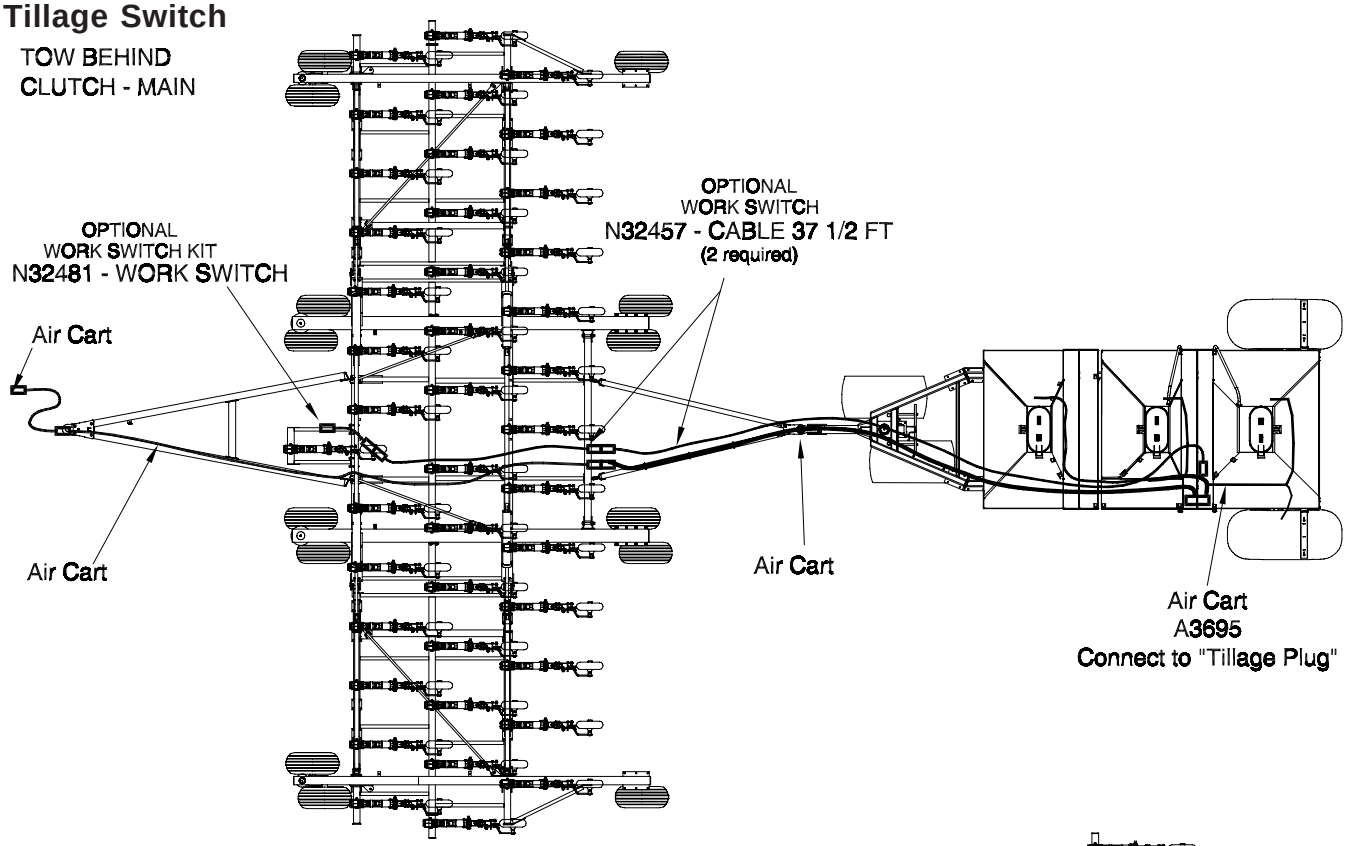

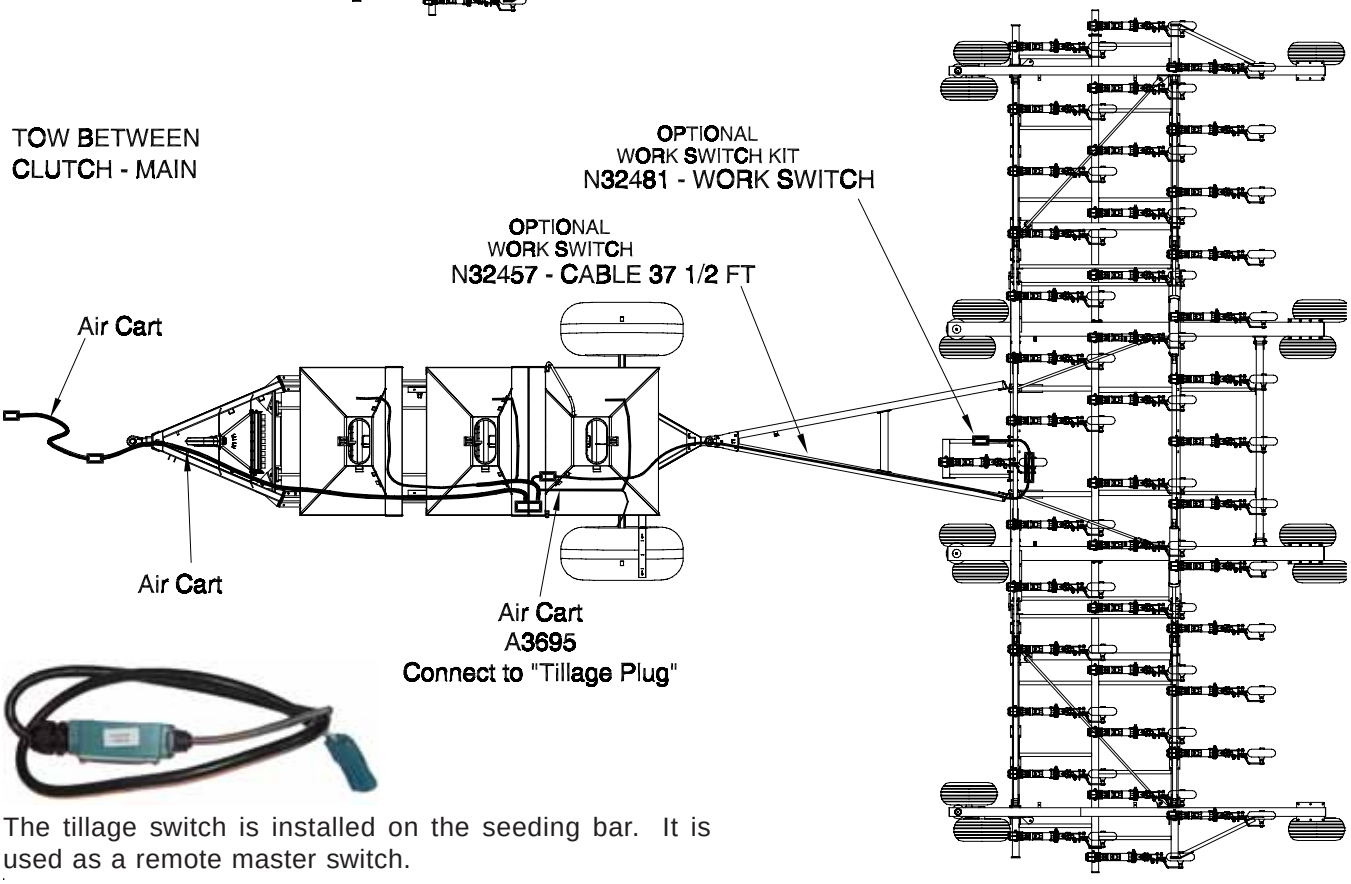

The tillage switch is installed on the seeding bar. It is used as a remote master switch.

Connects to **"Tillage Plug"** on A3695 Sensors Harness.

TopCon
EAGLE - System



1 - A3815 Eagle Console



2 - MDECU



3 - A1771 Run-Reset Box
33 - Mount Bracket
34 - Screw #10



4 - A1779 Adapter Harness



5 - A464 Tractor Harness



6 - A467 Implement Extension



7 - A468 Chassis Extension Harness
7A - A3738 Chassis Extension Harness



10 - A3695 Sensor Harness



11 - A3737 4 Bin Drive Harness

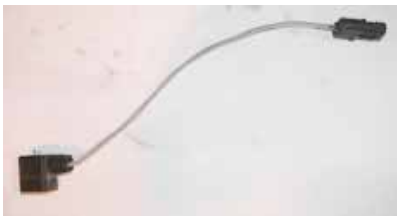

12 - A3739 Limp Home Harness

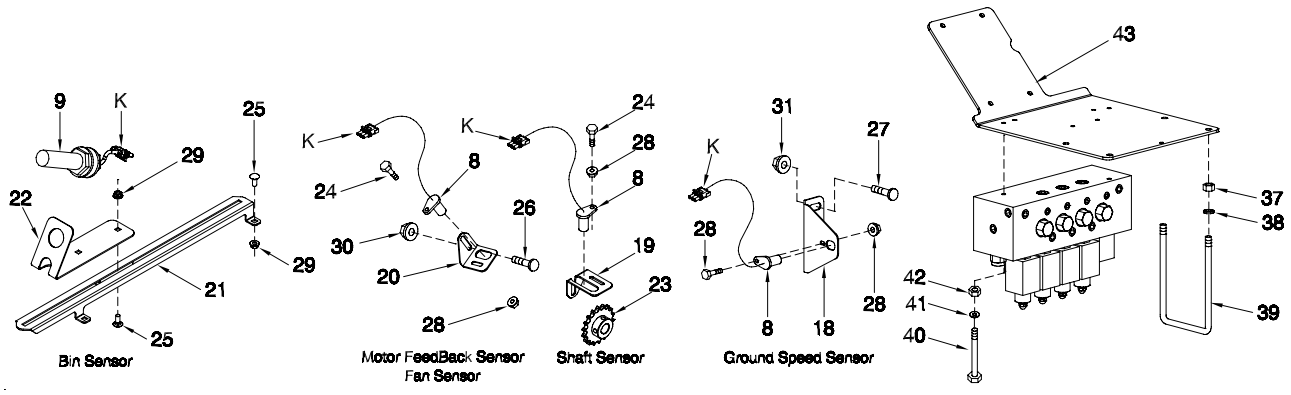

EAGLE - TopCon System

Item	Part No.	Description	No: Used 2Tank	3Tank	4Tank
1	N49188	Monitor Head - TOPCON EAGLE - A3815	1	1	1
2	A1526	Multidrive Electronic Control Unit (MDECU) 4 Channel	1	1	1
3	A1771	Run / Stop / Reset Switch Box	1	1	1
4	N49189	Adapter Harness - TOPCON EAGLE - A1779	1	1	1
5	A464	Actuator/Hydraulic Tractor Harness Suit Zynx And Seedrate Controller	1	1	1
6	A467	Actuator/Hydraulic Implement Extension Harness 12.5M (41Ft) With Lights	1	1	1
7	A468	Actuator/Hydraulic Chassis Extension Harness 10M (32.5Ft) With Lights (8240, 8300, 8336, 8370 & 8425)	1	1	-
7A	A3738	Actuator/Hydraulic Chassis Extension Harness 12M (39.5Ft) With Lights (8435, 8630 & 8650)	1	1	1
8	A3680	Shaft Sensor	3	4	5
9	A3681	Bin Level Sensor - No Bracket	2	3	4
10	A3695	Morris 8000 Series 4 Bin Sensor Harness	1	1	1
11	A3737	Morris Canada 4 Bin Drive Harness	1	1	1
12	A3739	Morris Canada Limp Home Adaptor Harness	1	1	1
18	N37330	Bracket - Sensor - Used with 32 Dia Rims	1	1	1
19	N45199	Bracket - Shaft Sensor - Metershaft	2	3	4
20	N29296	Bracket - Sensor	3	4	5
21	N42149	Adjustment Plate - Cart tanks 8240, 8300, 8336, 8370 & 8425	2	3	-
	N40899	Adjustment Plate - 3rd tank option on 8240, 8300 & 8370 and Cart tanks for 8435, 8630 & 8650	2	3	4
	N44649	Adjustment Plate - 4th tank option on 8650	-	-	1
22	N34799	Bracket - Bin Level Sensor	2	3	4
23	N45198	Sprocket - 40B18 - 3/4 Diameter Bore	2	3	4
24	W-469	Hex Bolt - 1/4 x 3/4	10	12	14
25	D-5259	Carriage Bolt - 5/16 x 3/4 Lg	4	6	8
26	D-5260	Carriage Bolt - 3/8 x 1 1/4 Lg	3	4	5
27	D-5265	Carriage Bolt - 1/2 x 1 Lg	2	3	4
28	D-5277	Locknut - 1/4 - Serrated	10	12	14
29	D-5278	Locknut - 5/16 - Serrated	4	6	8
30	D-5279	Locknut - 3/8 - Serrated	3	4	5
31	D14565	Locknut - 1/2 - Serrated	2	2	2
32	N45530	Shaft -Slow Speed - TOPCON VRT - 72 Tooth Feedback Wheel	2	3	4
33	N48009	Mounting Bracket - Run-Reset Box	1	1	1
34	N29696	Screw - #10 X 3/4 HEX SELF TAP - for Run-Reset Box	4	4	4
35	S27987	Locknut - 3/8 -16 Flange Centre Lock	2	2	2
36	W-475	Hex Bolt - 3/8 X 1 Lg	2	2	2
37	W-514	Hex Nut - 3/8	4	4	4
38	W-523	Lockwasher - 3/8	4	4	4
39	N36019	U-Bolt - 3/8 x 4 x 10 15/16 - 8240, 8300, 8336, 8370 & 8425	2	2	2
	N19723	U-Bolt - 3/8 x 4 x 6 15/16 - 8435, 8630 & 8650	2	2	2
40	W-1847	Hex Bolt - 1/4 x 5 Lg	2	2	2
41	W-521	Lockwasher - 1/4	2	2	2
42	W-512	Hex Nut - 1/4	2	2	2
43	N45193	Mounting Plate - Manifold	1	1	1
		Blockage Module Kits and Replacement Parts on Next Page			
	N49185	Extension Harness - TOPCON EAGLE - A2667			
	N49186	Extension Harness (29.5 ft) - TOPCON EAGLE (9M) - A2018			
	N49187	Extension Harness (16 ft) - TOPCON EAGLE (5M) - A768			
	N49168	Blocked Head Kit - EAGLE (Includes N49185, N49186, N49187)			
	N49169	Blocked Head Sensor - EAGLE - Small Hose - AGA4553			

TopCon
X20 - System



1 - A3745 Morris X20 Console



2- A1258 Seed Rate Interface



3 - MDECU



4 - A1771 Run-Reset Box
33 - Mount Bracket
34 - Screw #10



5 - A1734 Comms Cable



6 - A2400 X20 Power Harness



7 - A2615 X20 Ram Mount Angle Kit



10 - A3695 Sensor Harness



11 - A3737 4 Bin Drive Harness



13 - A3739 Limp Home Harness



15 - A464 Tractor Harness



16 - A467 Implement Extension



17- A468 Chassis Extension Harness
17A - A3738 Chassis Extension Harness

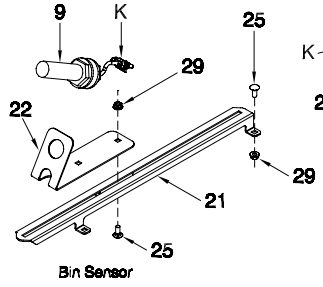

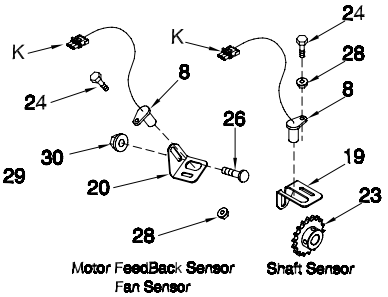

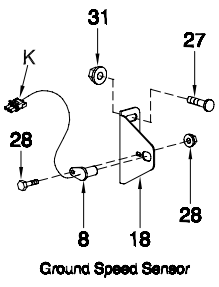

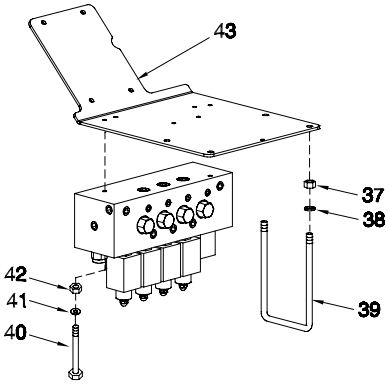

X20 - TopCon System

Item	Part No.	Description	No: Used 2Tank	3Tank	4Tank
1	A3745	Morris X20 Console	1	1	1
	A2678	X20 Seed Rate Operation Manual			
2	A1258	Zynx Seedrate / Spreader Interface	1	1	1
3	A1526	Multidrive Electronic Control Unit (MDECU) 4 Channel	1	1	1
4	A1771	Run / Stop / Reset Switch Box	1	1	1
5	A1734	Comms Cable Shielded 5M (16Ft) 9 Wire Male “D” To 9 Wire Female “D”	1	1	1
6	A2400	X20 Power Harness	1	1	1
7	A2615	X20 Ram Mount Angle Kit	1	1	1
8	A3680	Shaft Sensor	3	4	5
9	A3681	Bin Level Sensor - No Bracket	2	3	4
10	A3695	Morris 8000 Series 4 Bin Sensor Harness	1	1	1
11	A3737	Morris Canada 4 Bin Drive Harness	1	1	1
12	A1901	Serial GPS / VRC Comms Harness 0.3M (1Ft)	1	1	1
13	A3739	Morris Canada Limp Home Adaptor Harness	1	1	1
15	A464	Actuator/Hydraulic Tractor Harness Suit Zynx And Seedrate Controller	1	1	1
16	A467	Actuator/Hydraulic Implement Extension Harness 12.5M (41Ft) With Lights	1	1	1
17	A468	Actuator/Hydraulic Chassis Extension Harness 10M (32.5Ft) With Lights (8240, 8300, 8336, 8370 & 8425)	1	1	-
17A	A3738	Actuator/Hydraulic Chassis Extension Harness 12M (39.5Ft) With Lights (8435, 8630 & 8650)	1	1	1
18	N37330	Bracket - Sensor - Used with 32 Dia Rims	1	1	1
19	N45199	Bracket - Shaft Sensor - Metershaft	2	3	4
20	N29296	Bracket - Sensor	3	4	5
21	N42149	Adjustment Plate - Cart tanks 8240, 8300, 8336, 8370 & 8425	2	3	-
	N40899	Adjustment Plate - 3rd tank option on 8240, 8300 & 8370 and Cart tanks for 8435, 8630 & 8650	2	3	4
	N44649	Adjustment Plate - 4th tank option on 8650	-	-	1
22	N34799	Bracket - Bin Level Sensor	2	3	4
23	N45198	Sprocket - 40B18 - 3/4 Diameter Bore	2	3	4
24	W-469	Hex Bolt - 1/4 x 3/4	10	12	14
25	D-5259	Carriage Bolt - 5/16 x 3/4 Lg	4	6	8
26	D-5260	Carriage Bolt - 3/8 x 1 1/4 Lg	3	4	5
27	D-5265	Carriage Bolt - 1/2 x 1 Lg	2	3	4
28	D-5277	Locknut - 1/4 - Serrated	10	12	14
29	D-5278	Locknut - 5/16 - Serrated	4	6	8
30	D-5279	Locknut - 3/8 - Serrated	3	4	5
31	D14565	Locknut - 1/2 - Serrated	2	2	2
32	N45530	Shaft -Slow Speed - TOPCON VRT - 72 Tooth Feedback Wheel	2	3	4
33	N48009	Mounting Bracket - Run-Reset Box	1	1	1
34	N29696	Screw - #10 X 3/4 HEX SELF TAP	4	4	4
35	S27987	Locknut - 3/8 -16 Flange Centre Lock	2	2	2
36	W-475	Hex Bolt - 3/8 X 1 Lg	2	2	2
37	W-514	Hex Nut - 3/8	4	4	4
38	W-523	Lockwasher - 3/8	4	4	4
39	N36019	U-Bolt - 3/8 x 4 x 10 15/16 - 8240, 8300, 8336, 8370 & 8425	2	2	2
	N19723	U-Bolt - 3/8 x 4 x 6 15/16 - 8435, 8630 & 8650	2	2	2
40	W-1847	Hex Bolt - 1/4 x 5 Lg	2	2	2
41	W-521	Lockwasher - 1/4	2	2	2
42	W-512	Hex Nut - 1/4	2	2	2
43	N45193	Mounting Plate - Manifold	1	1	1
44	N48044	Switch Box - X20 Monitor Override (Not Shown)			
	A1705	Stylus (Not Shown)			
H	N29384	Packard Connector - BLACK - 2 Pin Plug			
I	N29385	Packard Connector - BLACK - 2 Pin Socket			
J	N27613	Packard Connector - BLACK - 3 Pin Plug			
K	N27614	Packard Connector - BLACK - 3 Pin Socket			
L	N29152	Packard Connector - BLACK - 4 Pin Socket			
M	N29153	Seal Connector - Black - BLACK - 4 Pin			

Blockage Module Kits and Replacement Parts on Next Page

X20 - TopCon System

Item	Part No.	Description	No: Used 2Tank	3Tank	4Tank
	N47400	Blocked Head ECU - A2021 - TOPCON (Not Shown)			
		A3540 Blocked Head Monitor Operators Manual			
	N47423	Blocked Head Sensor - A1961 - TOPCON (Not Shown)			
	N47424	Fan Pressure Sensor - A267 - TOPCON (Not Shown)			
	N47425	Seeder Interface Switch Box - A1267 - TOPCON (Not Shown)			
	N47426	Harness - 5th Tank Mini ECU - 0.5M - A2251 - TOPCON (Not Shown)			
	N47427	Harness - Mini ECU - A2189 - TOPCON (Not Shown)			
	N47428	Liquid System Loom - A1978 - TOPCON (Not Shown)			
	N47429	Extension Harness - 17.5M - A1839 - TOPCON (Not Shown)			
	N47430	Adapter Harness - NH3 ZYNX - A1833 - TOPCON (Not Shown)			
	N47431	Adapter Harness - NH3 Dicky John - A2327 - TOPCON (Not Shown)			
	N47432	Adapter Harness - NH3 Micro Trak - A2032 - TOPCON (Not Shown)			
	N47433	Adapter Harness - Liquid Fertilizer - A1581 - TOPCON (Not Shown)			
	N47434	Extension Harness - 1M - A1121 - TOPCON (Not Shown)			
	N47435	Extension Harness - 3M - A2017 - TOPCON (Not Shown)			
	N47436	Extension Harness - 9M - A2018 - TOPCON (Not Shown)			
	N47437	Kit:5th Tank UNI LIQUID - A3757 - TOPCON (Not Shown)			
	N47438	30S Sprayer ECU - AGA4059 - TOPCON (Not Shown)			
	N47439	Extension Harness - 13M - AGA4055 - TOPCON (Not Shown)			
	N47442	Adapter Harness - 1.5M - AGA4057 - TOPCON (Not Shown)			
	N47443	Tool Kit - AGA4054 - TOPCON (Not Shown)			
	N47444	Crimp Tool - U087 - TOPCON (Not Shown)			
	N47445	Kit:Sectional Liquid Control - AGA4056 - TOPCON (Not Shown)			
	N47446	AMP CPC Extraction Tool - U005 - TOPCON (Not Shown)			
	N47447	9 Pin AMP Plug Pack - A1475 - TOPCON (Not Shown)			
	N47448	16 Pin AMP Plug Pack -A1477 - TOPCON (Not Shown)			
	N47449	Extension Harness - 7.5M - A2671 - TOPCON (Not Shown)			
	N47451	Extension Harness - 12M - A2428 - TOPCON (Not Shown)			
	N47452	Extension Harness - 1M - 18 sensors - AGA4277 - TOPCON (Not Shown)			
	N47453	Extension Harness - 7.5M - A2669 - TOPCON (Not Shown)			
	N47438	Control - Sectional ECU - AGA4059 - TOPCON (Not Shown)			
	N48000	X20 AGCAM Interface Kit - AGA4076 (Not Shown)			
		A3275 AGCAM Operations/Installation Manual			
	N48001	X20 AGCAM Interface - A3358 (Not Shown)			
	N48002	X20 AGCAM Power Harness - A3360 (Not Shown)			
	N48003	X20 AGCAM USB Cable - A3366 (Not Shown)			
	N48004	X20 Power Adapter Harness - A1953 (Not Shown)			
	N48005	X20 AGCAM Camera - DMAC-RC-PAL (Not Shown)			
	N48006	X20 AGCAM Cable 20' - DMAC-EC20 (Not Shown)			
	N48007	X20 AGCAM Cable 60' - DMAC-EC60 (Not Shown)			
	N48008	X20 AGCAM Cable 6' - DMAC-ACA6 (Not Shown)			
	N48010	X20 AGCAM Camera w/Cable - DNCA-C1-PAL (Not Shown)			
	N48011	Adapter Harness - X20 Speaker Audio Harness - H1173 (Not Shown)			
	N48012	External Speaker - X20 - A1229 (Not Shown)			
	N48013	Mini USB Keyboard - X20 - A2665 (Not Shown)			
	N48014	Ram Mount Adapter - RAM-233 (Shown in item 7)			
	N48016	Ram Mount Base - RAM-202U (Shown in item 7)			
	K45686	Ram Mounting Arm - RAM-201U (Shown in item 7)			

TOPCON - Continued

Installation of MDECU on Air Cart

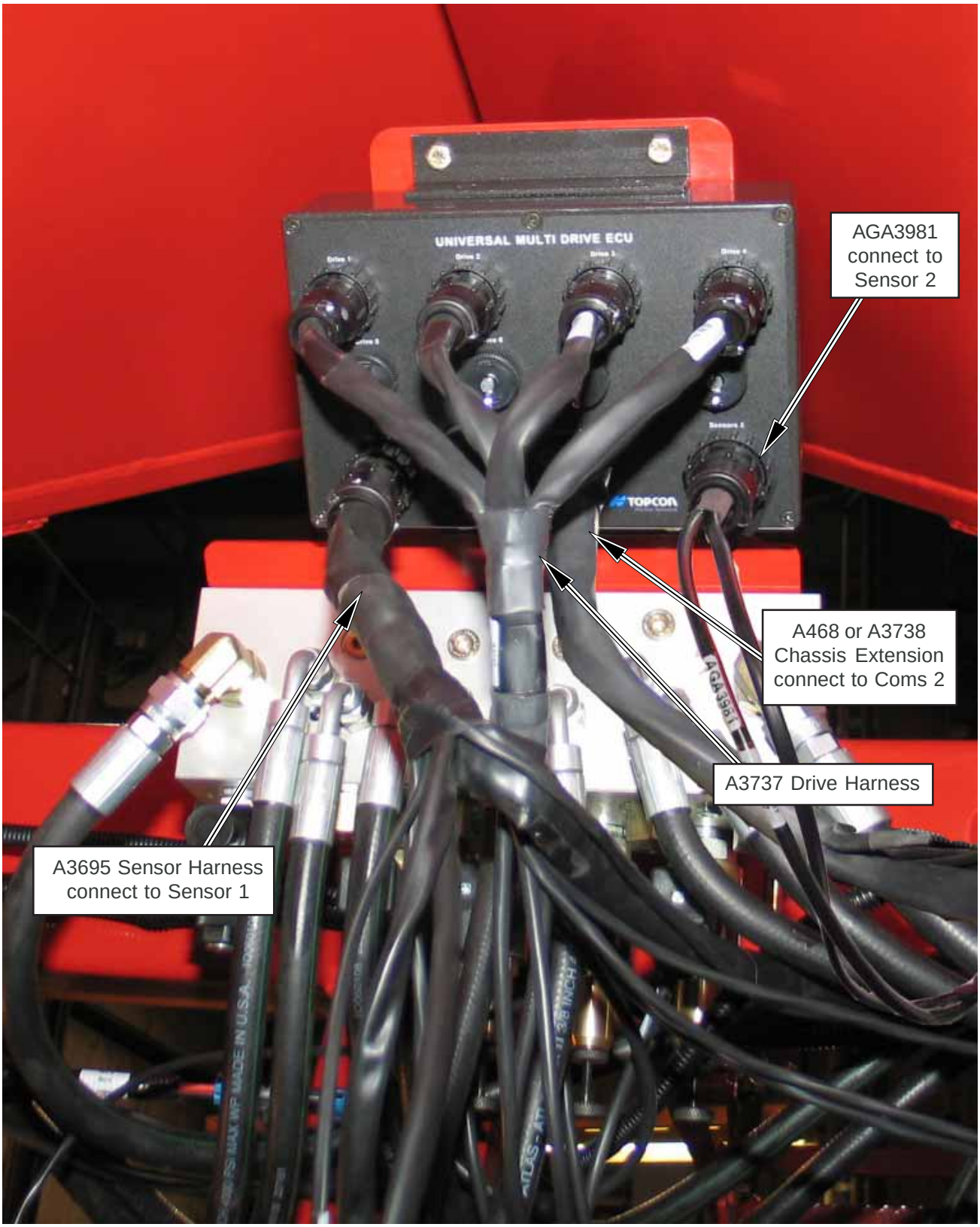

TOPCON - Continued

Installation of Sensors on Air Cart

1. Install A3680 shaft sensors and N45198 18 tooth sprocket on the right side end of the metering shafts. Set sensor to magnet gap to .030 inch.
2. N45530 feedback sprockets (72tooth) must be installed on the motors to complete the drive train assembly. Install A3680 shaft sensors at each feedback sprocket. Set sensor to feedback sprocket gap to .030 inch.
3. Mount A3681 bin level sensors in N34799 brackets and mount to adjustable slide inside each tank. Ensure the supplied grommet is used where the wires pass through the tank wall. Refer to the supplied wiring diagram to properly install each weather-pack connector after wires are run through the tank wall.
4. Attach AGA3981 cable to "**Sensor 2**" on MDECU box. Attach A1771 Run-Rest Box to AGA3981 cable.







Mount to Ladder



TOPCON - Continued

Installation of Sensors on Air Cart

4. Mount A3680 fan sensor in N29296 adapter plate and bolt to the fan sensor bracket. Install the sensor assembly and bracket onto the fan housing. Adjust the components so the fan sensor reads off of the two bolts in the fan rotor hub. Set sensor to bolt gap to .030 inch. Use locktight on sensor threads and ensure all bolts are tightened once properly adjusted.
5. Install a A3680 hall effect sensor on N37330 groundspeed sensor bracket and install on the back left wheel.

For all VRT Systems the Ground Speed Sensor bracket must be mounted as shown below:

32 inch rims - Bracket mounted to outside of axle lug.

Adjust sensor in mounting bracket to align with sprocket.

Set sensor to sprocket gap to .030 inch.



Fan Sensor



32 inch rims

TOPCON - Continued

Installation of Sensors on Air Cart

Manual Overide

The limp home harness connects from the "**AUX connection**" on the A468 chassis harness. It then connects to the Master solenoid on the Morris Air Cart. This harness is used in emergencies to finish off field

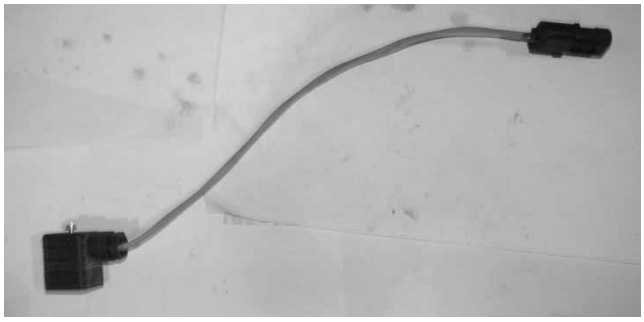

Limp home harness supplied in Topcon Kit.

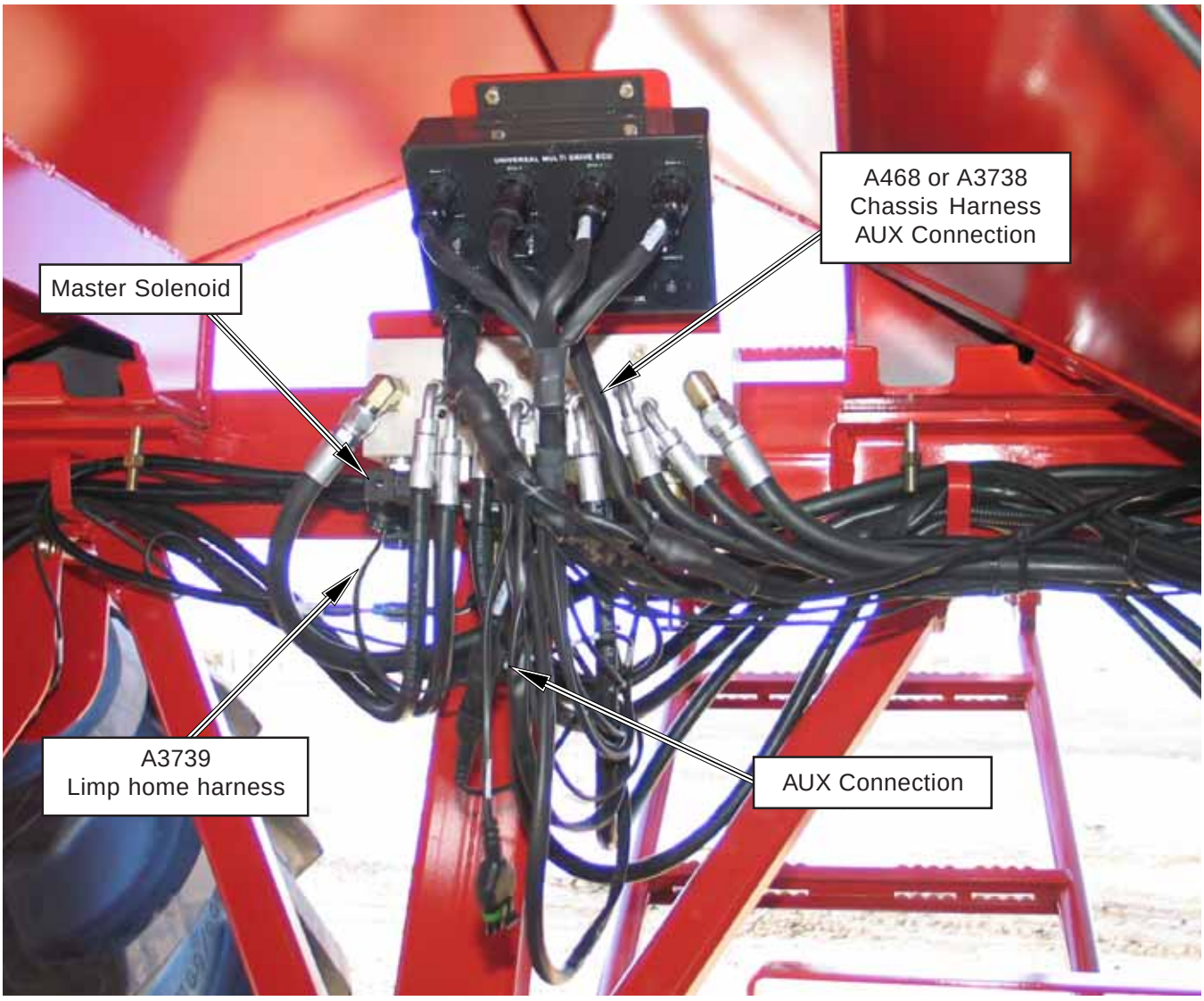

Limp home harness installed on Air Cart.

TOPCON - Continued

Installation of Sensors on Air Cart

Manual Override - Continued

Operating

- Connect Manual Override switch to AUX connection on A464 Wire Harness on tractor.
- Refill tanks or open the tank shut-offs.
- Ensure Manual Override switch is in the OFF position, this will shut off the shaft motors.
- Start Fan.
- Move forward with seeding tool at desired speed.

Note: It is important to maintain a constant ground speed since product application rate will not adjust to any changes in ground speed.

- Engage metering system by turning ON the Manual Override switch.
- Lower seeding tool into ground.
- Turning at headland:
  - Disengage metering system by turning OFF the Manual Override switch, immediately raise seeding tool fully rephasing hydraulics (see seeding tool manual).
  - Once turned engage metering system by turning ON the Manual Override switch, and lower seeding tool into ground.

Note: Re-zero shaft hydraulic motors once normal operation of system is resumed.

Important

Manual Override switch is not connected during normal operation.



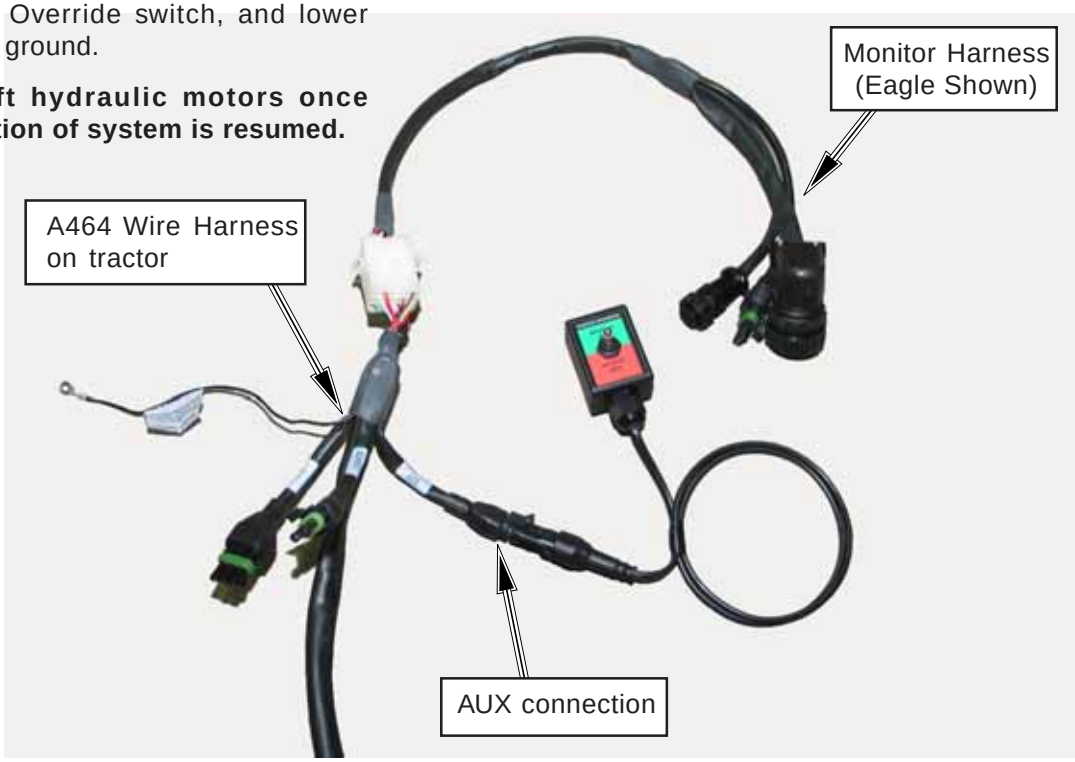

TOPCON - Continued

Installation of Sensors on Air Cart

Topcon Switch Box - Optional (A1267)

The switch box is supplied to customers who do not wish to touch the screen on the X20. It turns the tanks or master switch on/off. It provides a remote interface to turn the tanks and master switch on/off. It also has toggle switches to increase and decrease the rate of each tank separately. This is an option on the Morris Carts.



Topcon Switchbox.

Fan Pressure Sensor - Optional (A267)

The Fan Pressure Sensor senses the pressure at the fan as it enters the primary air delivery tubes



Fan Pressure Sensor

TOPCON - Continued
Calibration - VRT

Rate Calibration

The practice of doing a rate calibration is strongly recommended, as it will confirm the **actual** amounts of product dispensed per motor revolution **(Weight/Rev)**.

Weight/Rev (Calibration Factor) is used by the monitor to determine the shaft motor rpm required to deliver the correct application rate.

The following procedure should be followed for every change of product.

- Engage hydraulic lever to run air cart.
- **Turn off fan** by switching selector valve (located in the fan supply line) to calibration position.
- Remove the wing nuts on the collector bottom.
- Remove the bottom of the collector.
- Set Flapper Valves to **"Calibration"**as per the decal located on the front of the Collector.

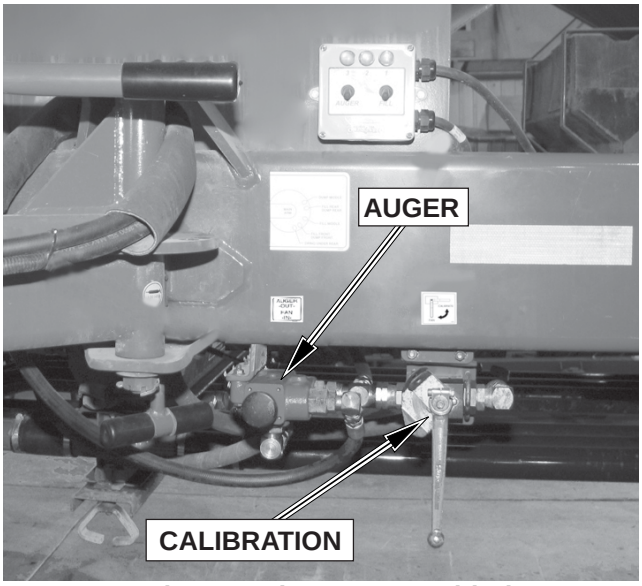

Selector Valves - Tow Behind



Selector Valves - Tow Between

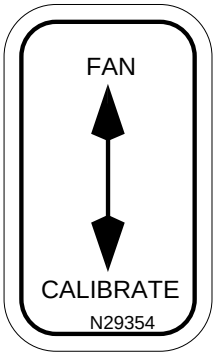

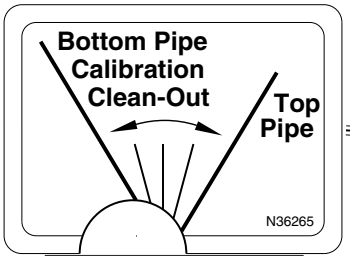

Decal on Collector

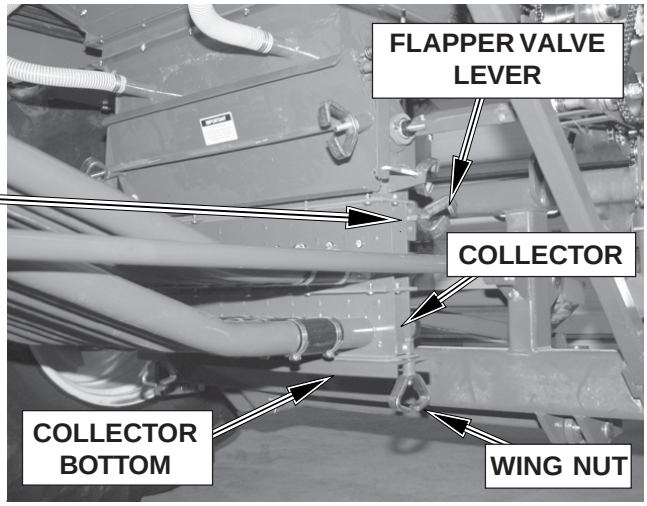

Double Shoot Shown

TOPCON - Continued

Rate Calibration - Continued

- Hook the Rate Calibration Insert on collector bottom and rotate up into postion. Secure in place with slide lock.
- Slide the rate check box onto the collector body.
- **Prime metering wheels first** by using the run switch on the Run-Reset Box to start and stop the meter drive. Allow the drive to run until material begins to fall through the collector body. Press the rest button for 5 seconds to zero monitor count before collecting sample.

Note: The Topcon monitor must be turned ON in order for the primer switch to work.

Note: *Ensure the fan is not running.*

- Empty material from rate check box and reinstall it on the same collector.

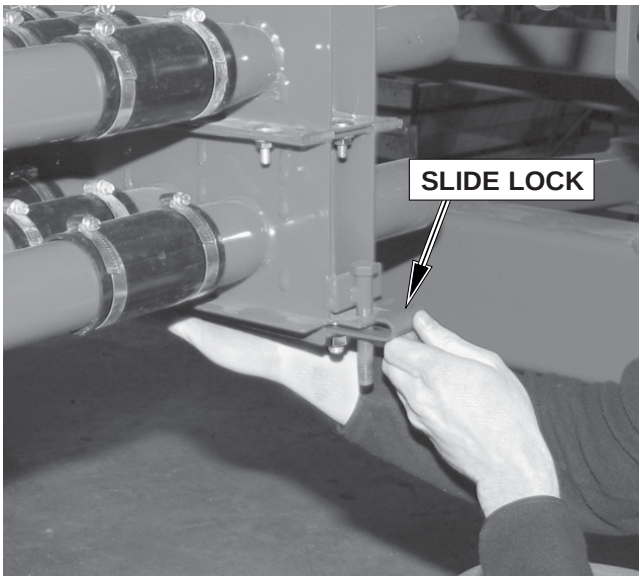



Tow Between - Calibration Insert

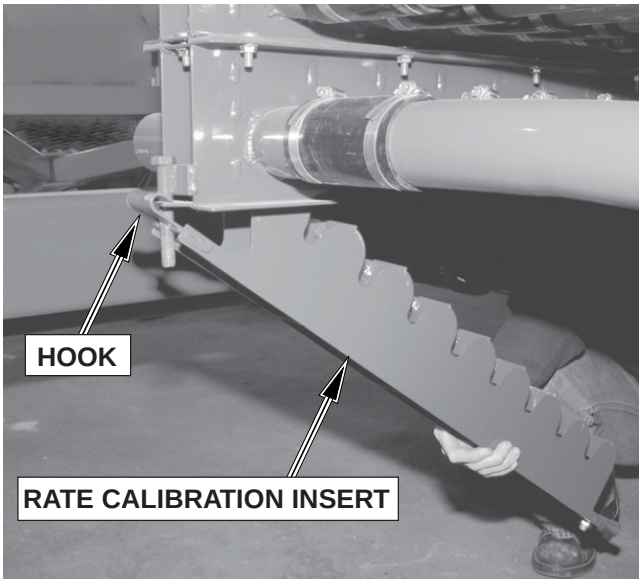

Tow Behind - Calibration Insert



Mount to Ladder

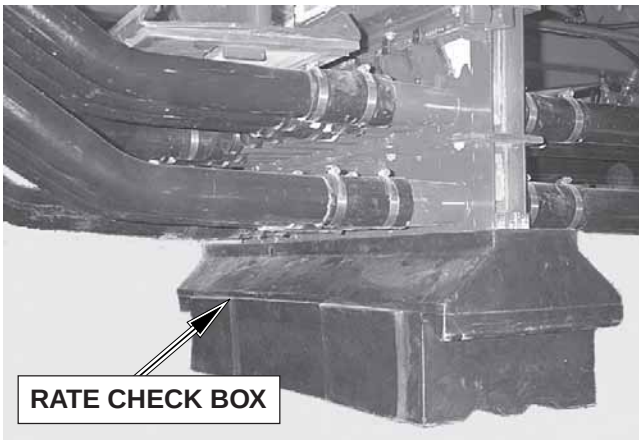

TOPCON - Continued

Rate Calibration - Continued

- Perform calibration as outlined in the Topcon manual.
- Remove the rate check box from the collector body.

  Weigh the sample by using tarp straps to hook rate check box to spring scale.

Note: Remember to subtract the weight of the rate check box from the total sample weight.

- Enter “Weight” of product collected as outlined in the Topcon manual.

Note: The Calibration Factor (Weight/Rev) is automatically calculated for the value being entered.

- Replace the bottom of the collector. Place rate check box into storage bracket.

Follow the above procedure to check the rate of the other tanks.

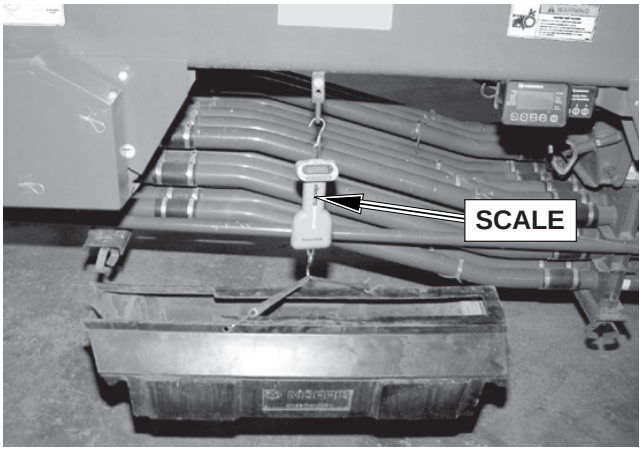

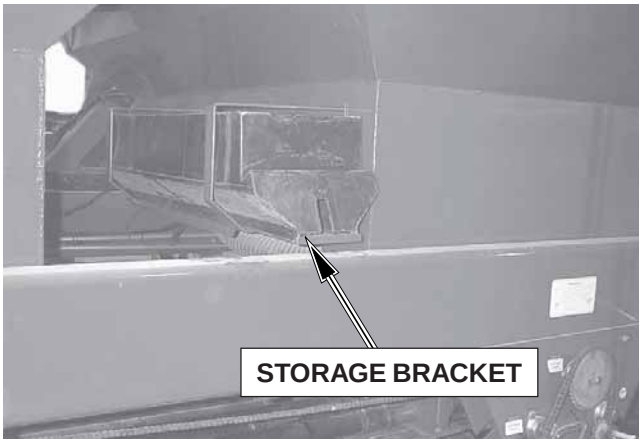

Important

Proper measurement of sample weight is critical for application rate accuracy.
Prime metering wheels before taking actual sample.
Remember to subtract the weight of the rate check box from the total sample weight.

Metering Rate Adjustment

The metering rate adjustment for all tanks is done in the same manner. A new rate is achieved by changing the APPLICATION RATE and or the Calibration Factor as outlined in the Topcon manual.

Note: It is recommended to set “Calibration Factor” by doing a “Rate Calibration”.

TOPCON - Continued

Manual Override

If the variable rate control system fails, the independent manual override system can be used to maintain seeder operation.

The manual override system provides the ability to run the hydraulic motors at a fixed rate **(not proportional to ground speed)** and to turn the manual system ON and OFF from the tractor cab.

Rate Setting

To set the manual override system use the following procedure:

- Turn Monitor OFF.
- Empty product from tanks or close tank shut-offs.
- Refer to the appropriate *"Ground Speed Chart"* on the following pages or use the calculations below to determine the meter shaft RPM for the desired product.
- Adjust meter shaft RPM using following procedure:
  - Place hand held tachometer onto meter shaft.
  - Remove cap nut and then loosen jam nut.
  - Turn adjusting screw IN (Clockwise) until meter shaft turns desired RPM.
  - Tighten jam nut to secure adjusting screw in place. Replace cap nut.
- Repeat the above procedure for the other meter shafts.

Note: Re-zero shaft hydraulic motors once normal operation of system is resumed.



Remove Cap Nut and Loosen Jam Nut



Adjusting Screw

Calculating Meter Shaft RPM

If it is desired to calculate the exact rpm for a more specific ground speed use the following:

Know parameters:

Working Width	The operating width of seeding tool. (feet)
Working Speed	Operating ground speed. (mph)
Application Rate	Weight of product. (lbs/acre)
Product WT/REV	Known from calibration mode or can determine from Calibration Chart. (lbs/rev)

TOPCON - Continued

Manual Override - Continued

Calculating Meter Shaft RPM

Determine in the following order:

1) Travel Distance (feet per acre) = 43560 ft^2 / Working Width (ft)
2) Travel Speed (feet per minute) = Working Speed (mph) x 5280 ft/mile / 60 min/hr
3) Travel Time (minutes per acre) = Travel Distance ft/acre / Travel Speed (ft/min)
4) Motor revs per acre = Application rate (lbs/acre) / WT/REV (lbs/rev)
5) Motor RPM = Motor Revs (revs/acre) / Travel Time (min/acre)
6) **Meter Shaft RPM**

   Direct Drive = Motor RPM / 2

   Slow Speed Drive = Motor RPM / 16

Operating in Manual Override

- Connect Manual Override switch to AUX connection on monitor harness.
- Refill tanks or open the tank shut-offs.
- Ensure Manual Override switch is in the OFF position, this will shut off the shaft motors.
- Start Fan.
- Move forward with seeding tool at desired speed.

Note: It is important to maintain a constant ground speed since product application rate will not adjust to any changes in ground speed.

- Engage metering system by turning ON the Manual Override switch.
- Lower seeding tool into ground.
- Turning at headland:
  - Disengage metering system by turning OFF the Manual Override switch, immediately raise seeding tool fully rephasing hydraulics (see seeding tool manual).
  - Once turned engage metering system by turning ON the Manual Override switch, and lower seeding tool into ground.

Note: Re-zero shaft hydraulic motors once normal operation of system is resumed.



TOPCON - Continued

Manual Override - Continued

6 mph Ground Speed Chart - Direct Drive

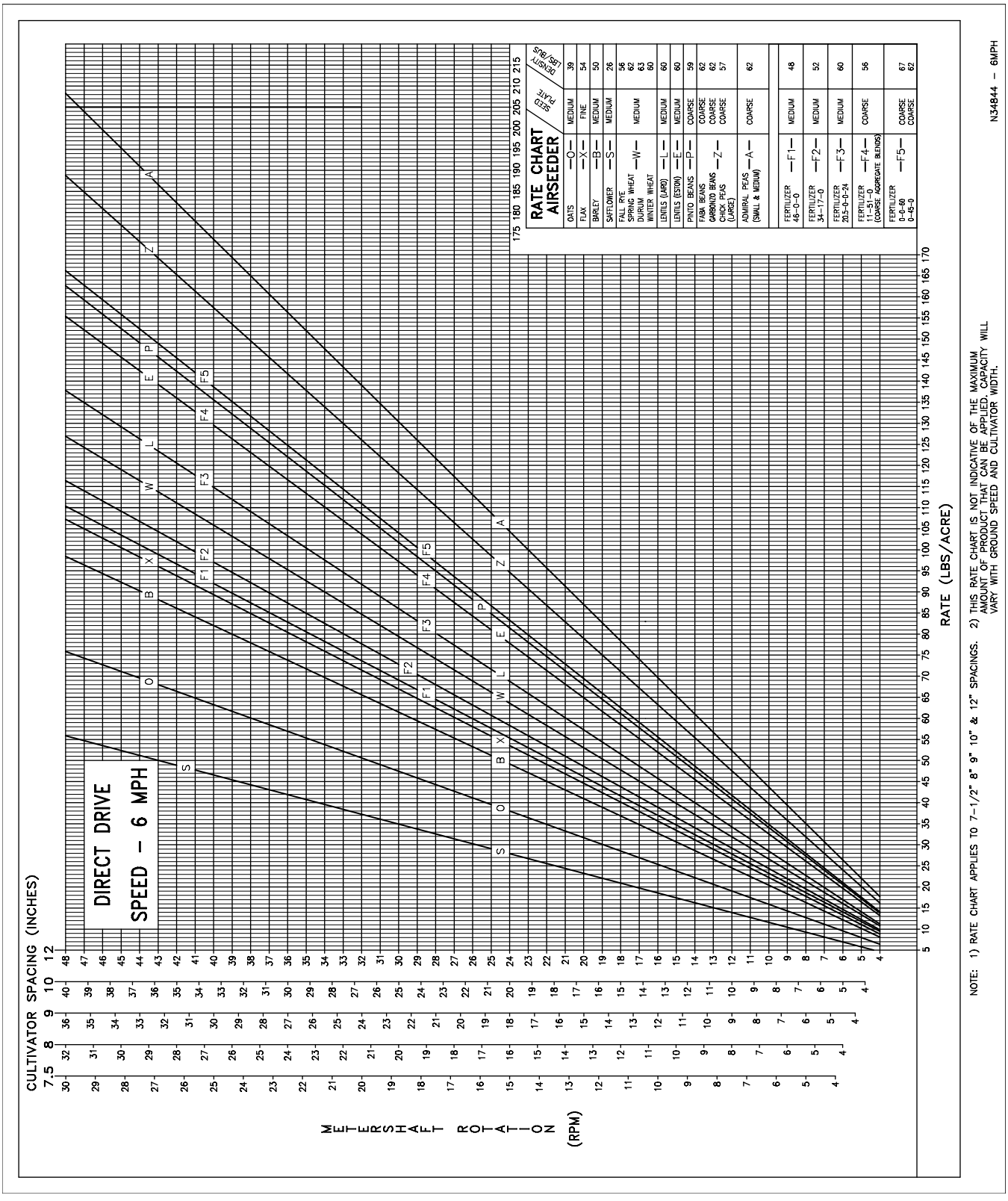

Manual Override - Continued

5 mph Ground Speed Chart - Direct Drive

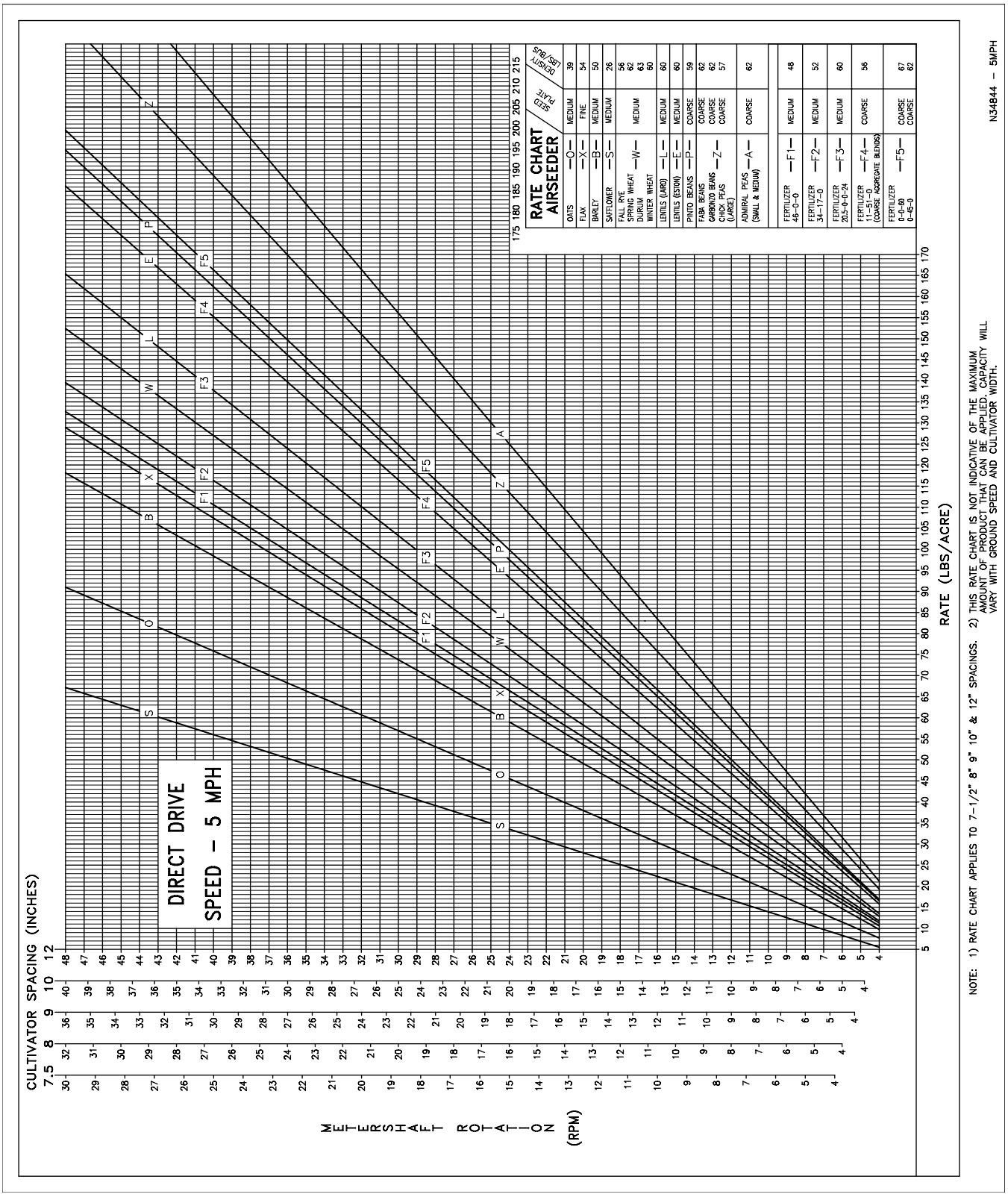

TOPCON - Continued

Manual Override - Continued

4 mph Ground Speed Chart - Direct Drive

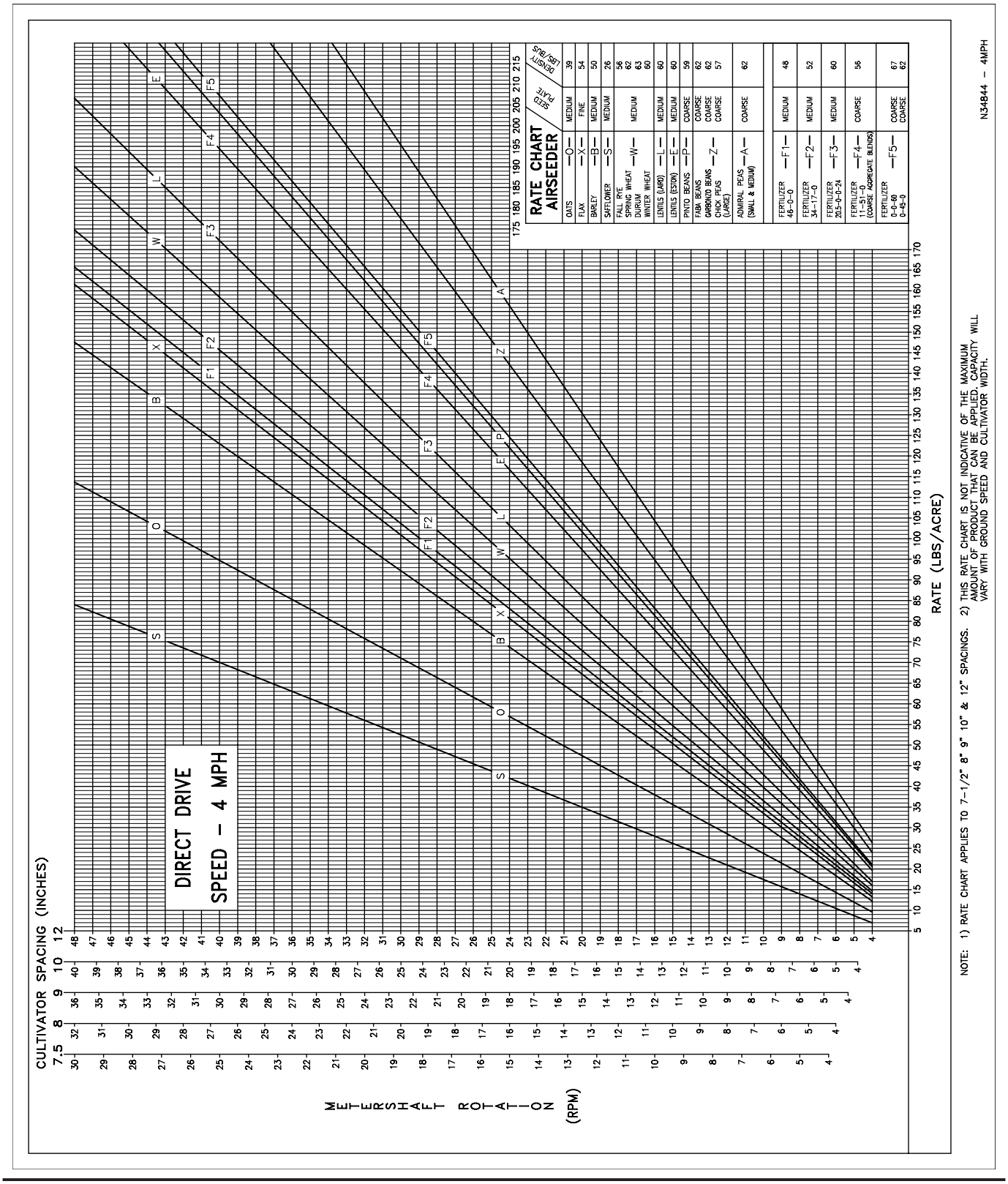

Manual Override - Continued

6 mph Ground Speed Chart - Slow Speed

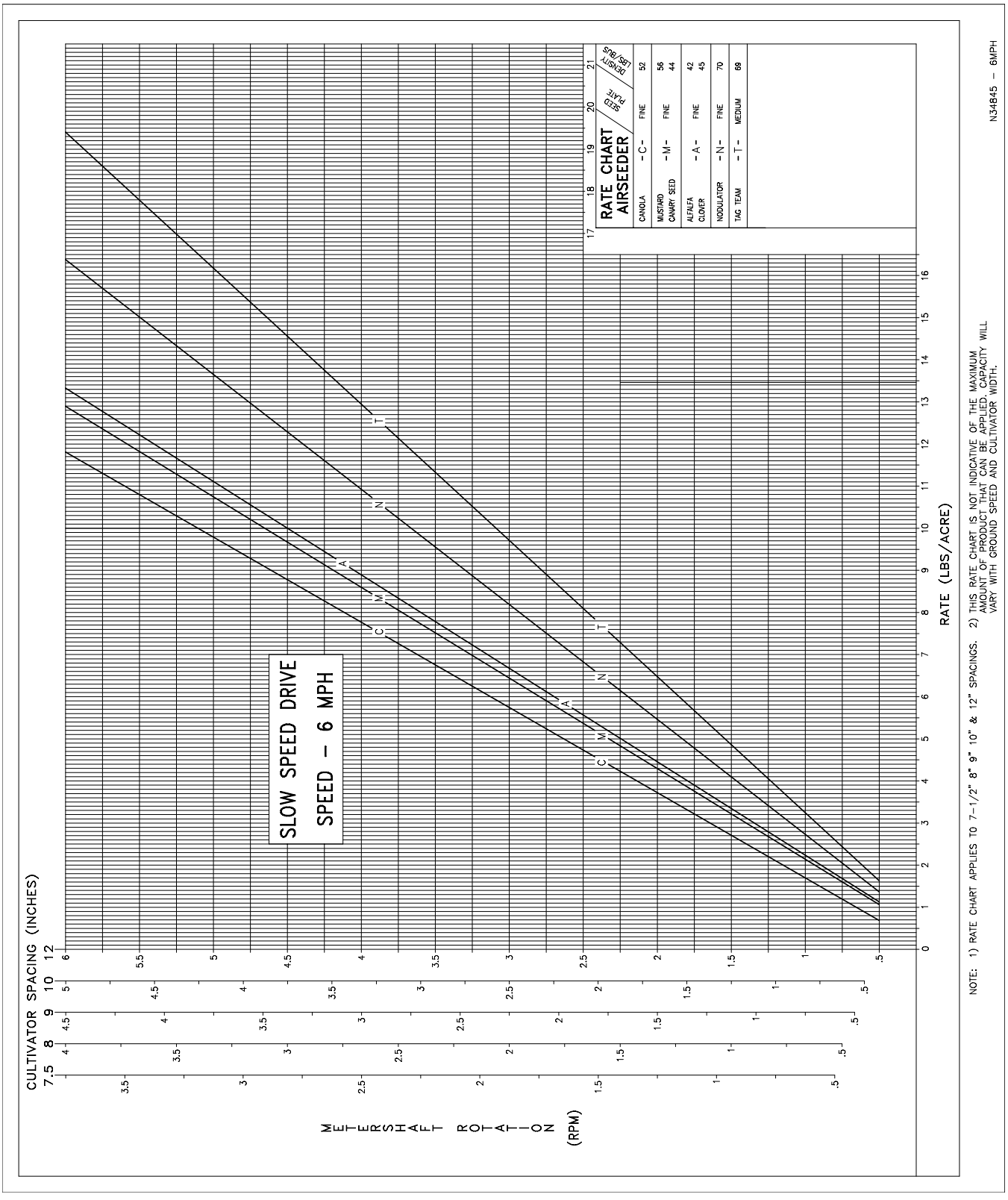

TOPCON - Continued

Manual Override - Continued

5 mph Ground Speed Chart - Slow Speed

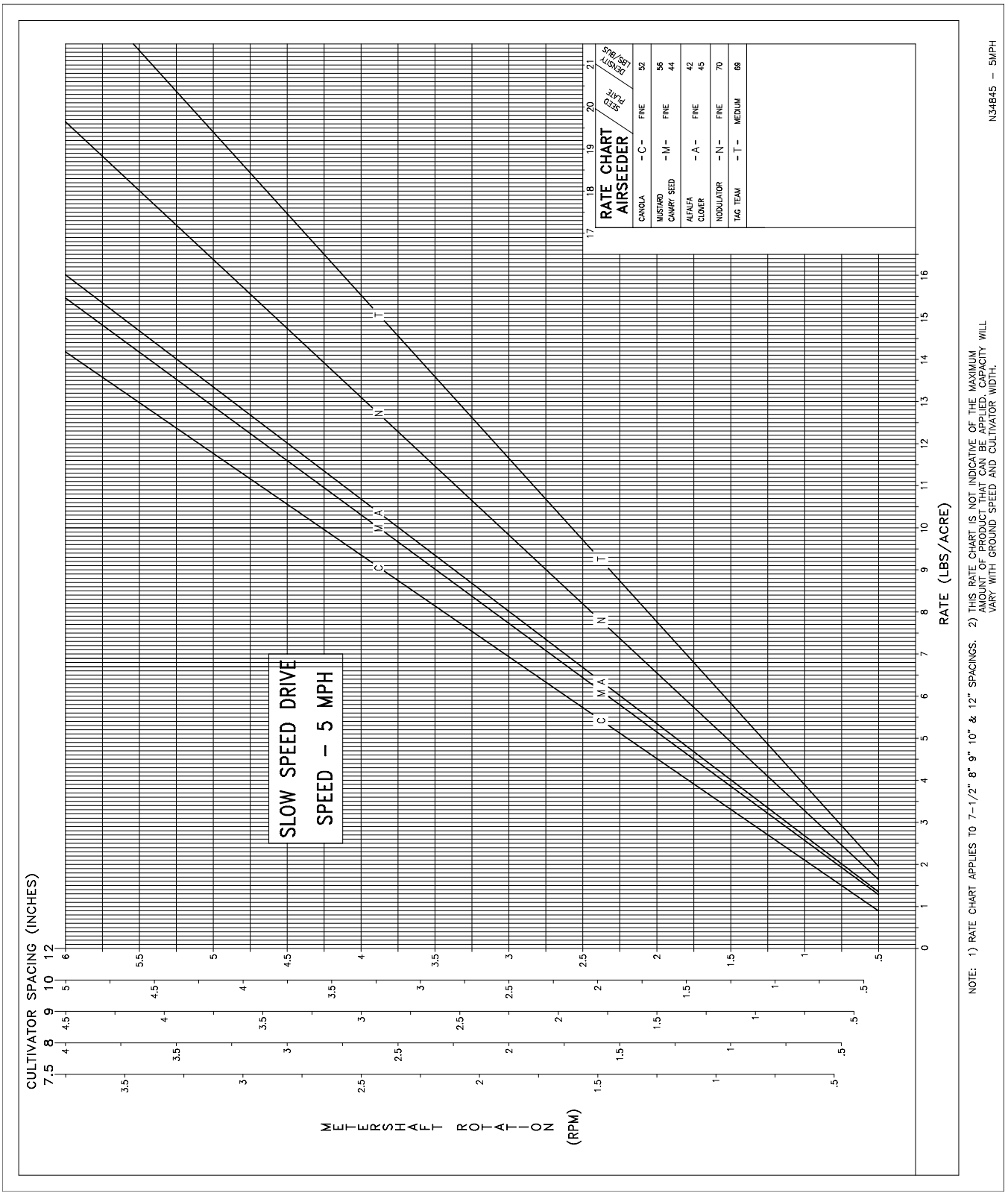

Manual Override - Continued

4 mph Ground Speed Chart - Slow Speed

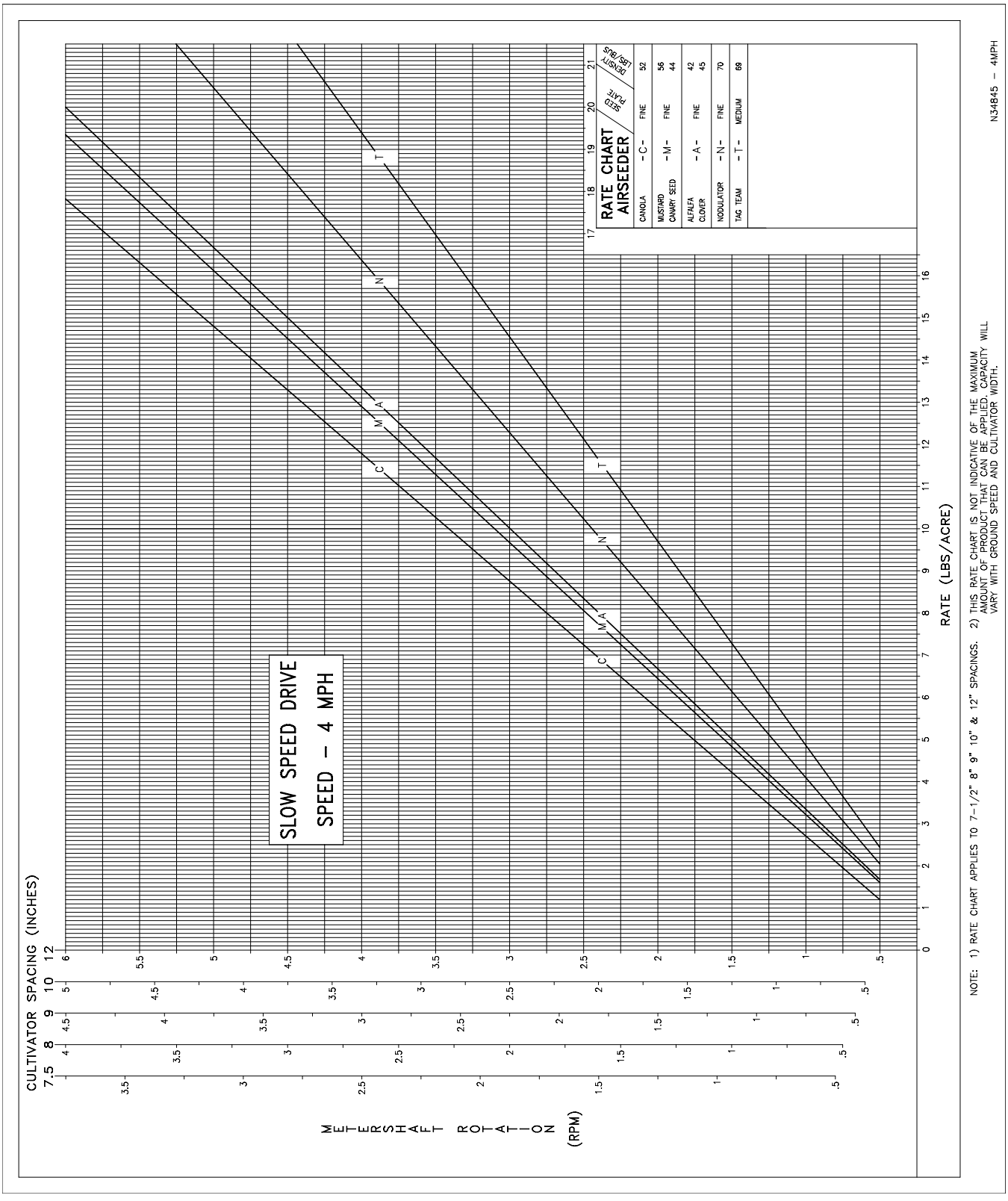

AGTRON

ART160 and ART260
Rate & Blockage Monitors



We hope that you find this manual easy to use and helpful. Contact Agtron Enterprises Inc. at ***1-800-667-0640***, on the web at **agtronservice.com** or email ***customerservice@agtron.com*** if you have any questions.

Quick Start: Turn to Page 11

AGTRON - Continued

Congratulations on your purchase of an ART 160/260 Rate and Blockage Monitor! With these state-of-the-art monitors you can confi rm your calibration for seed and fertilizer rates, and detect blockages in up to 120 seed and 120 fertilizer runs. You can also monitor up to nine additional (shaft, bin, speed) sensors.

1.0 How It Works

This symbol appears throughout this manual and indicates background and additional information in regards to the operation of the ART system.

ART 160/260 Rate and Blockage Monitors use infrared seed sensors to measure seed rate and check for blockages. The sensors operate on a similar principle to that of a motion detector in a security system. The ART 260 system includes a second sensor loop so seed and fertilizer can be measured separately in doubleshoot systems. In both systems sensors are connected in a loop, each communicating in turn, and each including build-in diagnostics. The system determines the number of sensors in a loop automatically. A maximum of 120 sensors can be connected in a loop.
Up to 12 additional sensors for shafts, bin and fan monitoring can be added (custom wire harness required). Each sensor connects directly to the monitor.

2.0 User Interface

The user interface for ART 160/260 monitors includes a 16 character by two line display and seven membrane pushbutton switches, or keys (PWR, RATE, MODE, CAL, OK, ,).



The display, which is backlit whenever the monitor is on, typically shows the currently selected operating mode on the top line. The bottom line typically shows alarms and rate information. Loop 1 rate information is shown on the left; Loop 2 rate information on the right. Abbreviations used on the display include:

AGTRON - Continued

Abbreviation	Meaning	Abbreviation	Meaning
KSD	thousands of seeds	HA	hectares
KPH	kilometers per hour	LP	sensor loop
MPH	miles per hour	LB	pounds
SAE	english/US	AC	acres
KG	kilograms	R	rate

For ART 260, pressing the RATE key changes the rate (loop) shown on the top line of the display. When changing settings, only the loop on the top line is affected. KSEED/LB, SENSITIVITY, SEED FACTOR and ROW COUNT must be set for each loop.

Button	Function
PWR	Press to turn on and off power
RATE	Press to toggle between Loop 1 and Loop 2 Rate display
MODE	Press to step through modes of operation
CAL	Press to move to a new calibration mode
OK	Press to acknowledge alarms; hold to reset Distance and Area
⇧ ⇩	Select high/low alarm modes; Enter calibration values

3.0 Installation and Setup

3.1 Monitor head installation

To mount the Monitor Head, remove the backing from the adhesive hook and loop strip, located on the back of the Monitor Head.

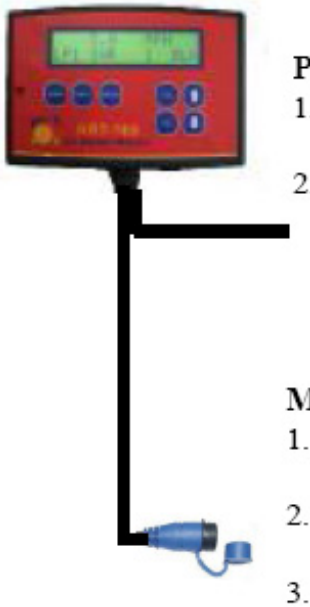

Power Cable

1. Connect the *red* wire to the battery positive terminal. A fuse is not required.
2. Connect the *black* power cable wire directly to the negative battery terminal. (Do not connect to the cab. Not all tractor cabs are properly grounded.)

Main Harness Extension

1. Connect the cable from the Monitor Head to a 10-foot or 20-foot Main Harness Extension.
2. Route the Main Harness Extension to the implement hitch.
3. Secure the Main Harness Extension to the equipment with cable ties, allowing enough slack for hitch movement.

5

AGTRON - Continued

When making Extension cable connections, make sure you align the molded arrows. If they are difficult to push together, check the condition of the pins.

To help avoid electrical interference problems, create a figure eight shape with excess cable before securing.

3.2 Seed Sensor Installation

1. Select a mounting location near the distributor. The Sensor Loop Cables should not be stretched tight when connected.
2. Mount the Seed Sensors in the hose above the implement chassis to protect the Seed Sensors and cables from field debris damage.
3. Secure the Seed Sensors in the hose using metal hose clamps.

If necessary, apply heat to the hose ends in order to fi t the hose over the sensor.



To keep plugs clean, always connect unused seed sensor cables together.

3.3 Y-Cables and Sensor Loop Cables

Y-Cable Installation (less than 60 sensors)

1. Select a mounting location for the Y-cable in the center of the implement.
2. Secure the ring terminal of the Y-cable to the chassis of the implement.
3. Connect the Y-cable's male Sensor Loop Cable to Seed Sensor 1 (located on the far left side of the implement) using Sensor Loop Cables as needed.
4. Connect the Y-cable's female Sensor Loop Cable to the last Seed Sensor using Sensor Loop Cables as needed.

Y-Cable Installation (more than 60 sensors)

On systems with more than 60 Seed Sensors, an additional Y-Cable must be installed in the middle of the loop to improve power distribution.

1. Connect the blue male end of the second Y-cable to the blue female end of the first Y-cable.
2. Connect the first Y-cable's male Sensor Loop Cable to Seed Sensor 1 (located on the far left side of the implement) using Sensor Loop Cables as needed.
3. Connect the first Y-cable's female Sensor Loop Cable to the last Seed Sensor using Sensor Loop Cables as needed.
4. Connect the second Y-cable's male and female Sensor Loop Cable into the middle of the seed sensor loop.

AGTRON - Continued

When making connections, align the molded arrows, push together, and secure the latch. If the connectors diffi cult to push together, check the condition of the pins.

To prevent cable damage, have cables follow the hydraulic hoses whenever possible.

Sensor Loop Cables (single loop)

1. Select a Seed Sensor on the fi rst distributor or tower on the driver's left as Seed Sensor 1.
2. Connect the male plug of the fi rst Seed sensor to the female plug of the next closest Seed Sensor. (This will be Seed Sensor 2).
3. Continue connecting the remaining Seed Sensors on each tower or distributor in this fashion.
4. Using 10-foot Sensor Loop Cables, connect the towers or distributors together.

Sensor Loop Cables (dual loops)

The coloured cable ties included in this kit are to assist in easy installation and to differentiate between the two loops of sensors; blue for loop 1, yellow for loop 2.

1. Attach one cable tie to each end of all extension cables and y-cable that will be used.
2. Attach blue ties for all loop 1 cables.
3. Attach yellow ties for all loop 2 cables.

If the cables of the seed sensors appear to swing or shake excessively, secure them by entwining the sensor loop cables with rope; tighten the rope only enough to stop the swinging motion.

3.4 GPS Speed Sensor

(Requires Speed Sensor Adapter Cable)

Requires Pulse or Radar style signal output from GPS unit.

To install and confi gure the GPS speed sensor:

1. Using one of the connectors or the unterminated end of the Speed Sensor Adapter cable, connect to the output of your GPS unit
2. Connect the Speed Sensor Adaptor cable to the bottom of the ART monitor head via the DB9 connector.
3. From the Main Rate screen, press the MODE key.
4. Press CAL two (2) times. The SELECT SNR CH # screen appears.
5. Select the channel that the sensor is plugged into (marked on the speed sensor adapter cable) using the up arrow. Press OK. The SNR CHANNEL #__ screen appears.
6. Use the UP arrow to select SPEED SENSOR and press OK.

To calibrate the GPS input:

1. Press the MODE key several times until the DIST screen appears. Distance is in meters for metric units, feet for SAE units.
2. Clear the accumulated distance by pressing the DOWN key, then holding the OK key for 5 seconds.
3. Drive a known distance.
4. Press the CAL key and set the Distance Check value to agree with the distance driven (from 0.1 to 9999999.9) using the up and down arrows. The circumference value is modifi ed when editing the distance check value.

3.5 Radar Speed Sensor

(Requires Speed Sensor Adapter Cable)

To install and confi gure the Radar speed sensor:

1. Using one of the connectors or the unterminated end of the Speed Sensor Adapter cable, connect to the output of your Radar unit.
2. Connect the Speed Sensor Adaptor cable to the bottom of the ART monitor head via the DB9 connector.
3. From the Main Rate screen, press the MODE key.
4. Press CAL two (2) times. The SELECT SNR CH # screen appears.
5. Select the channel that the sensor is plugged into (marked on the speed sensor adapter cable) using the up arrow and press OK. The SNR CHANNEL #__ screen appears.
6. Use the up arrow to select SPEED SENSOR and press OK.

To calibrate the radar input,

1. Press the MODE key several times until DIST screen appears. Distance is in meters for metric units, feet for SAE units.
2. Clear the accumulated distance by pressing the down key then holding the OK key for 5 seconds.
3. Drive a known distance.
4. Press the CAL key and set the Distance Check value to agree with the distance driven (from 0.1 to 9999999.9) using the up and down arrows. The circumference value is modifi ed when editing the distance check value.

3.6 Manual Work Switch

(Requires Speed Sensor Adapter Cable and Switch)

To install and confi gure the Manual Work Switch:

1. Using the unterminated end of the Speed Sensor Adapter cable, connect to your manual in-cab switch.
2. Connect the Speed Sensor Adaptor cable to the bottom of the ART monitor head via the DB9 connector.
3. From the main rate screen, press the MODE key.

8

AGTRON - Continued

4. Press CAL two (2) times. The SELECT SNR CH # screen appears.
5. Select the channel that the sensor is plugged into (marked on the sensor breakout cable or speed adapter cable) using the up arrow and press OK. The SNR CHANNEL #__ screen appears.
6. Use the up arrow to select WORK SENSOR and press OK.

When the workswitch is off, it will silence all alarms, and area and distance totals will not accumulate.



There can be one (1) work sensor installed.
The monitor requires an open/close circuit switch for a workswitch. DO NOT use a powered switch without a relay.

3.7 Automatic Work Switch

(Requires Sensor Breakout Cable and Shaft Sensor)
To install and confi gure the Automatic Work Switch:

1. Install the shaft sensor and magnet on the toolbar in a place where the magnet and sensor are close in the working position and far from each other when not working (when the drill is up).
2. Connect the Shaft sensor to one of the leads on the Sensor Breakout cable.
3. From the main rate screen, press the MODE key.
4. Press CAL two (2) times. The SELECT SNR CH # screen appears.
5. Select the channel that the sensor is plugged into (marked on the sensor breakout cable or speed adapter cable) using the up arrow and press OK. This will bring the SNR CHANNEL #__ screen.
6. Use the up arrow to select WORK SENSOR and press OK.
   When the workswitch is off, it will silence all alarms, and area and distance totals will not accumulate.

3.8 Shaft Sensor

(Requires Sensor Breakout Cable and Shaft Sensor)
To install and confi gure the Shaft Sensor:

1. Attach the magnet to the shaft (rotation under 1000rpm).
2. Select a mounting location for the sensor within ½” (13mm) of the magnet.
3. Connect the Shaft sensor to one of the leads on the Sensor Breakout cable.
4. From the main rate screen, press the MODE key.
5. Press CAL two (2) times. The SELECT SNR CH # screen appears.
6. Select the channel that the sensor is plugged into (marked on the sensor breakout cable) using the up arrow and press OK. The SNR CHANNEL #__ screen appears.
7. Use the up arrow to select SHAFT SENSOR and press OK.

8. Press MODE to open the SHAFT1 RPM screen.
9. Press CAL, and then enter the number of targets using the UP and DOWN arrows. Select OK.
10. Press the UP arrow to set SHAFT HIGH RPM (0 disables the alarm.) Select OK.
11. Use the DOWN arrow to set SHAFT LOW RPM (0 disables the alarm.) Press OK.

There can be up to 8 Shaft sensors installed using an ART 260 and a custom wiring harness.
The Shaft RPM can range from 0 to 99999; a larger number will display XXXXX .
Shaft rpm is calculated as RPM = (sensor pulses/min) / targets.

3.9 Fan Sensor

(Requires Sensor Breakout Cable and Fan Sensor)
To install and configure the Fan Sensor:

1. Mount the sensor within 1/16" (1mm) of a ferrous metal target such as a bolt head. (over 500 RPM).
2. Connect the Shaft sensor to one of the leads on the Sensor Breakout cable.
3. From the main rate screen, press the MODE key.
4. Press CAL two (2) times. The SELECT SNR CH # screen appears.
5. Select the channel that the sensor is plugged into (marked on the sensor breakout cable) using the up arrow and press OK. The SNR CHANNEL #__ screen appears.
6. Use the up arrow to select FAN SENSOR and press OK.
7. Press MODE to open the FAN1 RPM screen.
8. Press CAL, and then enter the number of targets using the UP and DOWN arrows. Select OK.
9. Press the UP arrow to set FAN HIGH RPM (0 disables the alarm.) Select OK.
10. Use the DOWN arrow to set FAN LOW RPM (0 disables the alarm.) Press OK.

There can be up to two (2) Fan sensors installed.
The Fan RPM can range from 0 to 99999; a larger number will display XXXXX .
Fan rpm is calculated as RPM = (sensor pulses/min) / targets.

3.10 Bin Sensor

(Requires Sensor Breakout Cable and Bin Sensor)
To install and confi gure the Bin Sensor:

1. Select a mounting location in the air tank at the desired empty product level. The Bin sensor alarms when product does not cover it.
2. In the selected mounting location, drill a 3/4" (19mm) hole.
3. Remove the cut-outs and adhesive backing from the supplied gasket, thread over the sensor cable and affi x to the back of the sensor.
4. Using a 5/16" (9mm) hex-driver and the provided self tapping screws, secure the Bin sensor to the mounting location.

10

AGTRON - Continued

5. Connect the Shaft sensor to one of the leads on the Sensor Breakout cable.
6. From the main rate screen, press the MODE key.
7. Press CAL two (2) times. The SELECT SNR CH # screen appears.
8. Select the channel that the sensor is plugged into (marked on the breakout cable) using the up arrow and press OK. The SNR CHANNEL #__ screen appears.
9. Use the up arrow to select BIN SENSOR and press OK.

There can be up to 8 Bin sensors installed using an ART 260 and a custom wiring harness.
The Bin mode displays all 8 bins on one line. If the Bin is in alarm, it will display an E; if the Bin is not in alarm it will display the Bin number.

4.0 Quick Start

To turn on, press the PWR key. To turn the system off, press and hold the PWR key for five seconds.

The monitor continues to draw 10mA while in the off state. If power is removed, settings will not remain in memory.

4.1 Default Cal Wizard

When the Default Calibration is set, the monitor will guide you through primary setup for the ART Rate and Blockage system
Press the OK key to advance through each screen. Press the RATE key at any time to exit the Default Cal Wizard.

1. UNITS - use the UP and DOWN arrows to select either METRIC or SAE. Press the OK key to advance to the next screen.
2. IMPLEMENT WIDTH - use the UP and DOWN arrows to enter the drill width in inches or centimeters (metric). Press the OK key to advance to the next screen.
3. LP 1 ROWS (LP2 ROWS for ART260) - use the UP and DOWN arrows to enter the number of rows (openers) on the seeder. Press the OK key to advance to the next screen.
4. LP 1 SENSITIVITY (LP2 SENSITIVITY for ART260) - Use the UP and DOWN arrows to select a sensitivity level (see section 4.2 Blockage Monitoring). Press the OK key to advance to the next screen.
5. TEST SPEED - use the UP and DOWN arrows to select a test speed. Press the RATE key to exit the Cal Wizard.

AGTRON - Continued

4.2 Blockage Monitoring

1. From the main rate screen, press the CAL key twice. The LP 1 SENSITIVITY screen appears.
2. Select a sensitivity between 0 and 125. See Appendix A for approximate values.
3. To select a sensitivity value, ensure that there are no blockages and begin seeding.
4. Increase the sensitivity until the monitor alarms. Then, decrease the sensitivity by 3 to 5 units at a time until the monitor no longer indicates blocked alarms.

The goal is to have the SENSITIVITY value as high as possible without giving constantalarms. If a seed sensor measures fewer seeds per second than the Blockage Sensitivity value indicates, a blockage alarm is occurs.

A Blockage Sensitivity value of 0 will disable the power and alarms to the seed sensor loop. The default value is 15.

Sensitivity values less than 15 require the scanning loop to run slower giving the sensors longer than 1 sec periods to count seed. This allows for sensitivity ranges down to 1 seed / 30 sec.

12

AGTRON - Continued

5.0 Rate Monitoring

To set the ART for accurate rate monitoring, there are a few more steps involved. The following section provides those steps in detail.

5.1 Rate Units

1. From the main rate screen, press the MODE key
2. Press the CAL key eight (8) times (9 times for loop 2). Each time you press the CAL button the display steps through other screens. The LP1 RATE UNITS screen appears.
3. Use the arrows to toggle between KSEEDS/ACRE and LBS/ACRE.

5.2 Implement Width

1. From the main rate screen, press the MODE key.
2. Press the CAL key four (4) times. The IMPLEMENT WIDTH screen appears.
3. Enter a value between 1.0 and 99999.9. Width is in inches (centimeters).

5.3 Row Count

1. From the main rate screen, press the CAL key four (4) times. The LP 1 ROW COUNT screen appears.
2. Enter a value between 1 and 120. The row value is the total number of openers on the seeder. This allows for accurate seed rate calculations when not all seed runs have sensors.

5.4 Speed

There are four possible speed inputs available. From least accurate to most accurate, these are: Test Speed, Wheel/shaft sensor, Radar input, GPS input.

(Test speed)

1. From the main rate screen, press the MODE key.
2. Press the CAL key one (1) time. The TEST SPEED MPH screen appears.
2. Use the arrows to enter a value between 0 and 20.0.

5.5 Seed Density (only in LBS/ACRE units)

1. From the main rate screen, press the CAL key once. The LP 1 KSEED/LB screen appears.
2. Enter a value between 0 and 999999. See table in Section 8.2 for approximate values. The seed density value is in 1,000 seeds/lb (seeds/kg) units.

To calculate the most accurate seed density value, take a small sample of your product and weigh it. Count the seeds (particles for fertilizer) and multiply that number to get the number of seeds per pound (kilogram) for your particular product. eg. 230 seeds weighs 0.1lbs; 230x10 = 2,300 seeds/lb.

5.6 Seed Factor

1. Begin seeding and take note of the seeding rate reading during normal seeding.
2. From the main rate screen, press the CAL key three (3) times. The LP 1 SEED FACTOR screen appears.
3. Enter a value between 1.0 and 99999.9.
4. To calculate the proper Seed Factor, take the actual seeding rate and divide it by the displayed seeding rate. eg. actual seeding rate of 150lbs/ac, displayed seeding rate of 120 lbs/ac - 150/120 = 1.25 seed factor.

5.7 High and Low Rate Alarms

1. From the main rate screen, press the UP arrow. The LP 1 HIGH RATE screen appears.
2. Use the UP and DOWN arrows to set RATE HIGH value (0 disables the alarm.) Select OK.
3. From the main rate screen, press the DOWN arrow. The LP 1 LOW RATE screen appears.
4. Use the UP and DOWN arrows to set RATE LOW value (0 disables the alarm.) Press OK.

6.0 Turning Loops On and Off

To turn loops on and off:

1. From the main rate screen, press the MODE key once then CAL key six (6) times (7 times for loop 2). The LOOP 1 ENABLE screen appears.
2. Use the up or down arrow to toggle between ON and OFF. Press OK.

7.0 Area and Distance Modes

To access AREA mode:

1. Press the MODE key repeatedly until the AC1 or AC2 screen appears. Each time you press the MODE button the display steps through other screens.
2. To clear accumulated area, press the DOWN key, then hold the OK key for 5 seconds.

To access DISTANCE mode:

1. Press the MODE key repeatedly until the DIST screen appears. Each time you press the MODE button the display steps through other screens.
2. To clear accumulated distance, press the DOWN key, then hold the OK key for 5 seconds.
3. To enter distance check mode, press CAL.

AGTRON - Continued

8.0 Troubleshooting

8.1 Alarms

- **To acknowledge alarms** press the OK key.
- Acknowledging any alarm 3 times will permanently mute the alarm until the alarm status is restored to normal.
- Blockage alarms for every sensor in a loop can be acknowledged by holding the OK key for 5 seconds while in the rate mode for that loop.
- To temporarily silence all alarms, push the CAL, UP or DOWN keys to enter any calibration mode.



For this section, ___ indicates a sensor number.

8.2 Error (ERR) Messages

Monitor displays SNR 1 ERR.

- Check all the cables and connections. If the monitor head does not detect any sensors, this error will occur.
- Bypass Sensor 1 by connecting Sensor 2 to the sensor loop cable from the Y-cable. If the message is no longer displayed, replace Sensor 1.
- Connect a Seed Sensor directly to the Y-cable‘s male Sensor Loop Cable. If SNR 2 ERR is displayed, replace the Sensor Loop extension cable between the Y-cable and Seed Sensor 1.
- Connect the Y-cable and a sensor directly to the monitor head. If SNR 2 ERR is displayed, replace the main extension cables. If SNR 1 ERR is displayed, either the monitor head or Y-cable is faulty - contact Agtron Service.

Monitor displays SNR ERR one higher than total number of sensors.

- Check all the cables and connections.
- Bypass the last sensor by connecting the second last sensor to the sensor loop cable to the Y-cable. If the message is no longer displayed, replace the last sensor.
- Connect a Seed Sensor directly to the Y-cable. If SNR 2 ERR is displayed, replace the Y-cable. If SNR 1 ERR is displayed, replace the Sensor Loop extension cable between the Y-cable and the last Seed Sensor.

Monitor Displays SNR___ERR.

- Take note of the Sensor number indicated.
- Inspect the Sensor Loop cables in the indicated Seed Sensor location for damage. Replace or bypass any damaged pieces.
- Bypass the indicated Seed Sensor number. This is done by unplugging For this section, ___ indicates a sensor number.

the Seed Sensor and plugging the cables of the seed Sensor before and after together. The Seed Sensor count will be one less.
- If this results in normal operation, replace the bypassed sensor.
- If the ERR message is still displayed, bypass the Seed Sensor before the indicated Seed sensor number. If this results in normal operation, replace the Seed Sensor.
- If a Sensor Loop cable connects the two Seed Sensors, swap the Sensor Loop cable. If normal operation begins, replace the Sensor Loop cable.

Blocked runs are indicated but when checked and found to be clear.
- Verify the Sensitivity is not set too high.
- Check inside the distribution towers for any foreign material. This may cause blockages to move from sensor to sensor.
- If it is always the same sensor giving the blocked message, trade that sensor with one in another position. If the blocked message moves with the sensor, replace that sensor.

Monitor displays SNR __ CLN.
- Take note of the indicated numbers. This message indicates that the eyes (optical detectors) in the Seed Sensor tube are dirty.
- Clean the indicated Seed Sensors with warm water and a bristle pipe brush.
- If the Seed Sensor still causes a CLN message, replace it.

Monitor displays LP OVERLOAD.
- Check all the cables and connections.
- This message indicates that there is too large a power draw on the indicated sensor loop.
- There is most likely a short in the Sensor Loop.
- Remove one tower or cable at a time until the message disappears.
- Replace the last removed part.

Calibration settings are lost.
- Ensure that the monitor is connected directly to the battery.
- Check the voltage between the red and black wires of the power cable. Voltage should be greater than 10V.
- Check the tractor battery cables, connection to the starter and alternator. Electrical surges due to a faulty electrical system can cause this problem.

16

AGTRON - Continued

- Check that the red wire is not connected to the starting solenoid terminal.
- If the problem persists, send the Monitor Head to Agtron for repair.

Monitor displays REBOOT SYSTEM 01.

- This message indicates a memory error due to application and removal of power to the monitor.
- First, ensure the monitor is not connected to switched power.
- If monitor is connected to switched power, change wiring to connect the monitor directly to the battery of the tractor.
- Remove both the positive and negative wires from the battery and touch them together. This will reboot the system.
- Re-connect to the battery and restart the monitor as usual. If the message persists, call Agtron Service.

Speed Sensor is installed, but no speed showing.

- Ensure that SPEED SENSOR is selected on the proper channel. Channels 1, 2, and 3 are dedicated to the 9-pin connector at the bottom of the monitor; Channels 4, 5, 6 are dedicated to the Sensor Breakout Cable attached to the tool bar.
- From the main rate screen, press the MODE key once, then CAL key two (2) times. The SELECT SNR CH # screen appears.
- Select the channel that the sensor is plugged into (marked on the speed sensor adapter cable or Sensor Breakout Cable) using the up arrow and press OK. The SNR CHANNEL #__ screen appears.
- Use the up arrow to select SPEED SENSOR and press OK.
- If the speed does not register, contact Agtron Service.

Monitor displays HIGH/LOW alarms, but HIGH/LOW alarms set to 0.

- Press the MODE then CAL key five (5) times. The SYSTEM UNITS screen appears.
- Change units from SAE to METRIC using the UP/DOWN keys.
- Return to the rate screen and confirm HIGH/LOW alarms are set to 0.
- Change units back from METRIC to SAE.
- If alarms continue, press MODE then CAL key eight (8) times. The SET DEFAULT CAL? screen appears.
- Press and hold OK for 5 seconds to restore factory defaults.

17

AGTRON - Continued

Monitor displays ERR alarms when one loop is disabled, but no alarms when both loops enabled.

- Typically this is caused by loops that are all connected but cables are crossed either going to sensor 1 or coming back from the last sensor.
- Carefully trace one loop of sensors to determine where the cables are crossed.
- Switch the incorrect connections to make two independent loops.
- Cycle power on the monitor head to reset the system.

8.3 Diagnostic Modes

Diagnostic modes are accessed by pressing the RATE and MODE keys at the same time. No alarms are produced while in any of these modes. Press OK to scroll through these screens.

AUDIBLE ALARM

Set the Audible Alarm value to ON or OFF using the arrow keys. No alarms will be audible when Alarm value is OFF. The default value is ON.

LOOP CURRENT

Loop Current mode displays the Seed Sensor Loop Current draw in Amps.

MONITOR VERSION

Monitor Version mode displays the monitor's Hardware version on line 1 and the software version on line 2.

SEED SENSOR INFO

Select a seed fl ow sensor by pressing the up or down arrow. To change between loops (ART260), press and hold the UP or DOWN keys.
Sensor Info mode displays the current sensor number and its loop number on line 1 and Calibration values on line 2. This information may be needed when requesting technical assistance from Agtron Service.

SEED SENSOR VERSION

Press the CAL Key when in Seed Sensor Info mode.
Select a seed fl ow sensor by pressing the UP or DOWN arrow. Seed Sensor Version mode displays the current sensor number and its loop number on line 1 and Sensor Software version and hardware version on line 2. This information may be needed when requesting technical assistance from Agtron Service.

SYSTEM VOLTAGE

The power supply Voltage detected at the monitor is displayed

HOUR METER

The minute value ranges from 0 to 59.
The hour value ranges from 0 to 99. A larger number will display XX. The default value is 0.
To clear the accumulated time, press the DOWN button and then HOLD the OK key for 5 seconds.

AGTRON - Continued

8.4 Default Calibration Mode

Hold the OK key for 5 seconds to activate default calibration.
The default calibration will reset calibration values to default settings.
Default Calibration mode will automatically activate if the memory check fails at power up.
The table in Section 10.4 lists the Default Calibration values.



The Default Calibration message will appear on start-up until the monitor head is shut off using the PWR key before disconnecting power from the battery.

9.0 Reference

9.1 Monitor Display Messages

BLK	blockage in sensor
CLN	clean sensor
SYSTEM VOLT LOW	low power
XXXXXXX.X	accumulated value too large to display
DISABLED	all sensors in loop are turned off
ERR	error in sensor
LOW	rate below low alarm setting
HIGH	rate above high alarm setting
WORKSWITCH OFF	workswitch in off position
REBOOT SYSTEM 01	internal memory error
LP OVERLOAD	power draw in loop too large
SENS OFF	sensitivity is set to 0
NO SENSOR	no sensors detected in loop

AGTRON - Continued

Sensitivity	Seeds/second
0	Loop is off
1	1 seed 30 seconds
5	1 seed 20 seconds
10	1 seed 10 seconds
15	1
20	7
30	17
40	27
50	44
60	80
70	148
80	281
90	539
100	1043
110	2019
120	4400
121	4800
122	5300
123	5800
124	6400
125	7000

Product	Sensitivity

20

AGTRON - Continued

Seed	seeds/pound	seeds/kilogram
Barley: 2 row	10,000	22,050
Barley: 6 row	12,500	27,563
Bean	1,800	3,969
Buckwheat	15,000	33,075
Canola: Campestris	189,000	416,745
Canola: Napus	132,000	291,060
Canola: Polish	190,000	418,950
Corn	1,200	2,646
Fababean	1,150	2,536
Fall Rye	14,000	30,870
Flax	76,000	167,580
Lentil	10,300	22,712
Mustard	245,000	540,225
Oats	12,500	27,563
Peas	2,550	5,623
Rice	18,500	40,793
Safflower	12,500	27,563
Soybean	3,400	7,497
Sunflower	3,100	6,836
Triticale	10,150	22,381
Wheat: Hard Red	13,300	29,327
Wheat: CPS	11,400	25,137
Wheat: Durum	10,500	23,153
Wheat: Extra Strong	10,500	23,153
Wheat: Soft White	13,400	29,547

Fertilizer		
Ammonium Nitrate	48,400	106,704
Ammonium Phosphate	29,600	65,257
Potash	18,300	40,345
Urea	37,800	83,335

AGTRON - Continued

Parameter	Value
Circumference	120
Width	480
Fan 1 targets	3
Fan 1 Low alarm	3000
Fan 1 High alarm	9000
Fan 2 targets	3
Fan 2 Low alarm	3000
Fan 2 High alarm	9000
Shaft 1 targets	1
Shaft 1 Low alarm	10
Shaft 1 High alarm	250
Shaft 2 targets	1
Shaft 2 Low alarm	10
Shaft 2 High alarm	250
Shaft 3 targets	1
Shaft 3 Low alarm	10
Shaft 3 High alarm	250
Shaft 4 targets	1
Shaft 4 Low alarm	10
Shaft 4 High alarm	250
Shaft 5 targets	1
Shaft 5 Low alarm	10
Shaft 5 High alarm	250
Shaft 6 targets	1
Shaft 6 Low alarm	10
Shaft6 High alarm	250
Shaft7 targets	1
Shaft7 Low alarm	50
Shaft7 High alarm	1000

Parameter	Value
Shaft 8 targets	1
Shaft 8 Low alarm	10
Shaft 8 High alarm	250
Loop 1 sensitivity	15
Loop 1 seed count mult.	1
Loop 1 Enable	ON
Loop 1 rows	40
Loop 1 Seed/lb	1
Loop 1 Low alarm	0
Loop 1 High alarm	0
Loop 2 sensitivity	15
Loop 2 seed count mult.	1
Loop 2 Enable (ART260)	ON
Loop 2 rows	40
Loop 2 Seed/lb	1
Loop 2 Low alarm	0
Loop 2 High alarm	0
Loop Rate Units	LBS/AC
Test speed	0
Area 1	0
Area 2	0
Distance	0
Units	SAE
Audible alarm	ON
Hours	0
Mins	0

22

AGTRON - Continued

9.5 Sensor Breakout Connector Pin-out

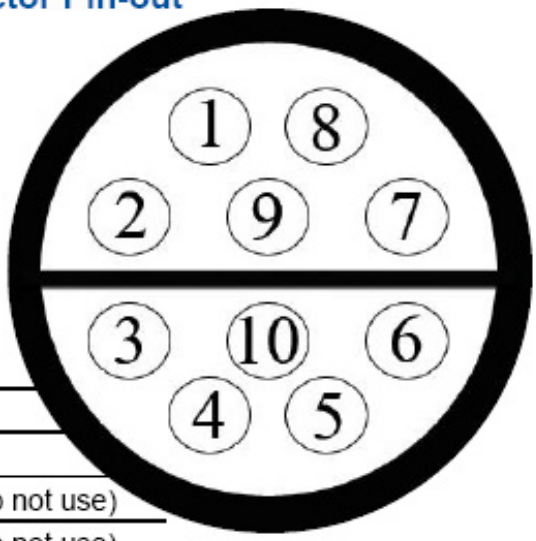

Pin#	Color	Use
Pin 1	Grey	Shield
Pin 2	Black	Ground
Pin 3	Yellow	Seed sensors (do not use)
Pin 4	Green	Seed sensors (do not use)
Pin 5	Brown	Loop 1 - sensor channel 4
		Loop 2 - sensor channel 7
Pin 6	Red	Loop 1 - sensor channel 5
		Loop 2 - sensor channel 8
Pin 7	White	12 Volt power
Pin 8	Blue	Seed sensors (do not use)
Pin 9	Violet	Seed sensors (do not use)
Pin 10	Orange	Loop 1 - sensor channel 6
		Loop 2 - sensor channel 9

9.6 DB9 Connector Pin-out

When looking at the monitor head:

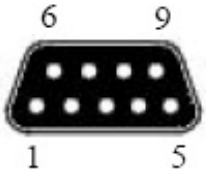

Pin 1	12V power
Pin 2	not used
Pin 3	not used
Pin 4	Ch 2 signal
Pin 5	Ground
Pin 6	not used
Pin 7	not used
Pin 8	Ch 1 signal
Pin 9	Ch 3 signal

AGTRON - Continued

Blockage Installation Diagram

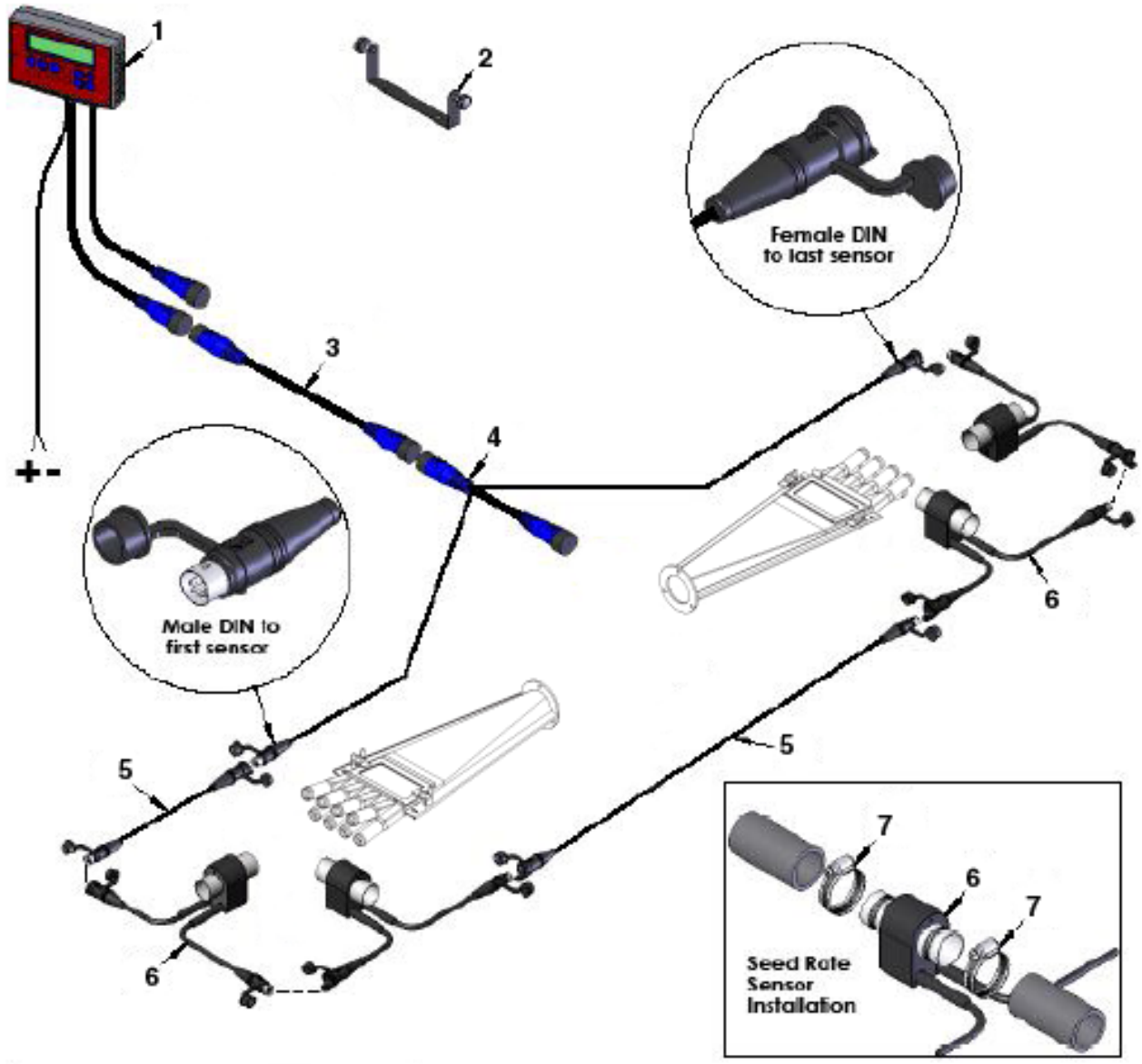

Item	Part No:	Description	No. Used ART100	No. Used ART260
1	N47469	Agtron ART100 monitor	1	-
1A	N47461	Agtron ART260 monitor	-	1
2	* * * * *	Monitor Mounting Bracket Kit	1	1
3	N47463	Extension Cable - 10ft (3m)	2	4
	N47464	Extension Cable - 20ft (6m)	1	2
4	N47462	'Y' Cable	1	2
5	N47465	Sensor Loop Cable - 2ft (0.6m)	-	-
	N47466	Sensor Loop Cable - 4ft (1.2m)	-	-
	N47467	Sensor Loop Cable - 10ft (3m)	6	12
	N47468	Sensor Loop Cable - 20ft (6m)	2	4
6	N47471	Sensor - Optical (24mm)	AsReq	AsReq
	N47472	Sensor - Optical (30mm)	AsReq	AsReq
7	N11470	Hose Clamp - HS-20	AsReq	AsReq
	N47470	Kit - ART100 Blockage Monitor (Includes 1, 2 to 5)		
	N47460	Kit - ART260 Blockage Monitor (Includes 1A to 5)		

AGTRON - Continued

Menu Navigation Flow Chart

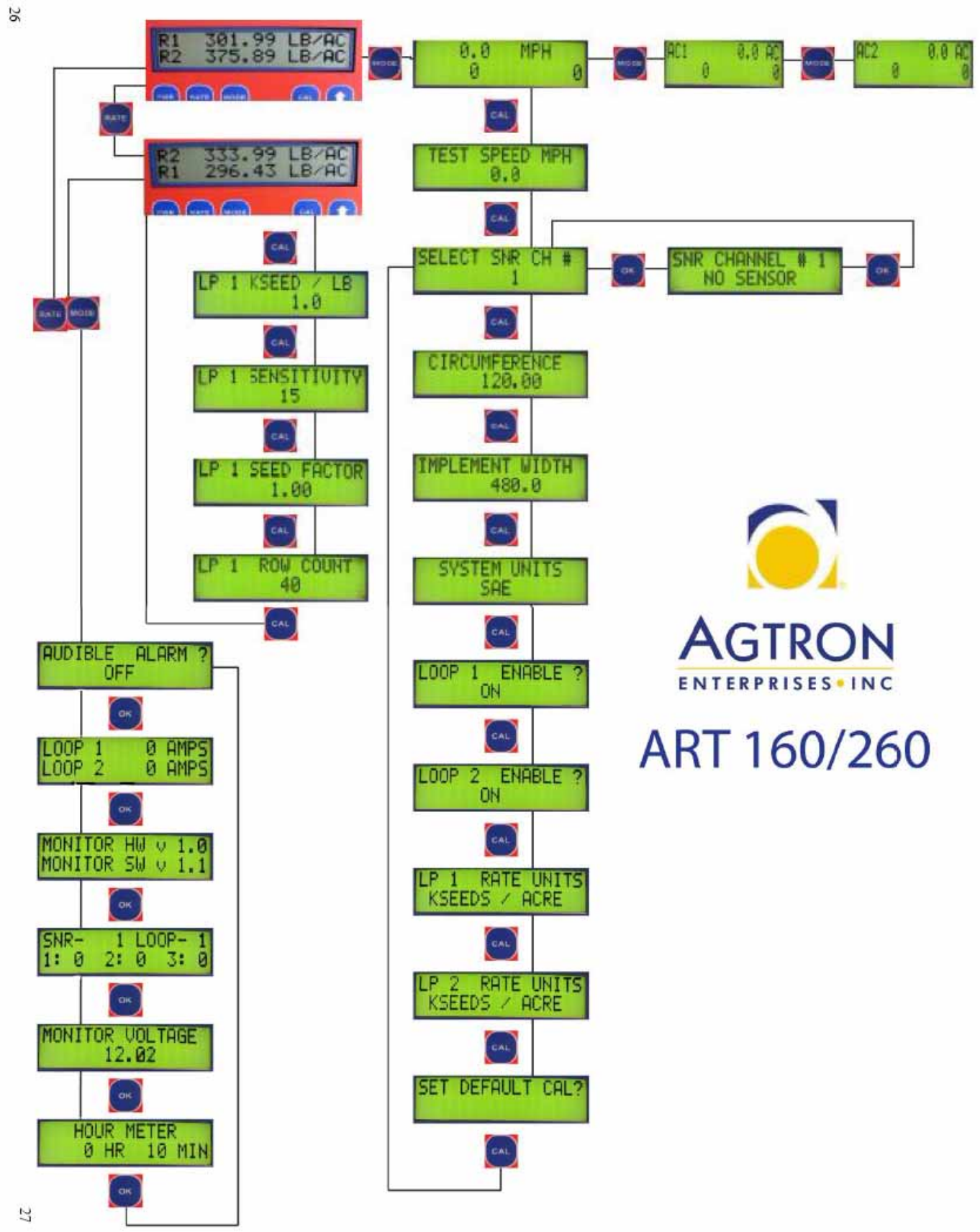



877-360-4360
April 1 to June 15

When you have an emergency during seeding you need help right away. That's why we created Morris 360 Service™—to provide Morris customers with around-the-clock troubleshooting access to our Technical Support Specialists. With just one call, you'll be connected to a real person with technical expertise to help solve your problem, day or night.

MORRIS

www.morris-industries.com

Corporate Head Office and Training Centre:
2131 Airport Drive
Saskatoon, Saskatchewan
S7L 7E1 Canada
Phone: 306-933-8585
Fax: 306-933-8626

It is the policy of Morris Industries Ltd. to improve its products whenever it is possible to do so. Morris Industries reserves the right to make changes or add improvements at any time without incurring any obligation to make such changes on machines sold previously.