MORRIS

Parts Manual



9 Series
Air Cart

Part Number N53349-04A

IMPORTANT:

ALL ITEMS ARE IDENTIFIED WITH A PART NUMBER. Some of the smaller parts such as bolts, nuts, washers, etc. are not all shown, however, the quantity used are listed in the text for that section which they fit into. That particular quantity is always the quantity required for one complete assembly.

Smaller parts, which are welded together to construct a larger part, are not to be ordered as individual pieces, unless they have a part number to identify them.

Contact your nearest dealer for genuine repair parts. Dealers carry ample stock and are backed by the manufacturer and regional associations.

MORRIS PAINT

Part Number	Description
N53713	1K Red MORRIS Touch-Up Pen 12 ml
N53714	1K Silver MORRIS Touch Up Pen 12 ml
N53715	1K Red MORRIS Aerosol Can 400 ml
N53716	1K Silver MORRIS Aerosol Can 400 ml
N55450	2K Red Base MORRIS Aerosol Can 250 ml
N55451	2K Silver Base MORRIS Aerosol Can 250 ml
N55452	2K Clear Coat MORRIS Aerosol Can 250 ml
N55453	2K Grey Primer MORRIS Aerosol Can 250 ml
N31087	Sky White MORRIS Aerosol Can 360 ml
K65885	White CF-546 Titan Aerosol Can 360 ml

SEAM SEALANT

Part Number	Description
N19277	Elastomeric Sealant - White - 300 ml Tube
N64530	Acrylic Caulking - Grey - 300 ml Tube
N72549	High Temp Sealant - 300 ml Tube

MANUALS

Part Number	Description
N53345	VRT Drive - Operator's Manual
N53347	Ground Drive - Operator's Manual
N56600	ICT Drive - Operator's Manual
N55777	X30 - Operator's Manual
N55799	X30 - ICT Operator's Manual
N65100	X35 - Operator's Manual
N65101	X35 - ICT Operator's Manual

Table of Contents

Section 1:
Tanks and Stairway 1-1
Tanks 1-2
Tank Combinations 1-2
One Panel Access 1-4
Two Panel Access 1-5
Large Tank Ladder 1-6
Small Tank Ladder 1-7
Tank Lids - Prior to 2018 1-8
Tank Lids - 2018 to Present 1-10
Stairway 1-12
Stairway - Prior to 2016 1-12
Fixed Handrails - 2016 to 2018 1-14
Folding Handrails - 2018 to Present 1-16
Stair Assist - 2016 to Present 1-18
Small Frame Stairway 1-20
Large Frame Stairway 1-22

Section 2:
Walkway - Handrails Fixed 2-1
9365 Walkway 2-2
9450 Walkway 2-4
9535 Walkway 2-6
9365 Handrails 2-8
9450 Handrails 2-10
9535 Handrails 2-12
9445 Walkway 2-14
9550 Walkway 2-16
9650 Walkway 2-18
9445 Handrails 2-20
9550 Handrails 2-22
9650 Handrails 2-24
9555 Walkway 2-26
9680 Walkway 2-28
9800 and 91000 Walkway 2-30
9555 Handrails 2-32
9680 Handrails 2-34
9800 and 91000 Handrails 2-36

Section 3:
Walkway - Handrails Folding 3-1
9365 Walkway 3-2
9450 Walkway 3-4
9535 Walkway 3-6
9365 Handrails 3-8
9450 Handrails 3-10
9535 Handrails 3-12
9445 Walkway 3-14
9550 Walkway 3-16
9650 Walkway 3-18
9445 Handrails 3-20
9550 Handrails 3-22
9650 Handrails 3-24
9555 Walkway 3-26
9680 Walkway 3-28

Table of Contents

9800 and 91000 Walkway....3-30
9555 Handrails....3-32
9680 Handrails....3-34
9800 and 91000 Handrails....3-36
Handrail Clamp Kit N66665 - Optional....3-38

Section 4:
Frame & Axles....4-1
Frame - Tow Behind....4-2
9365, 9450 and 9535....4-2
9445, 9550 and 9650 - Prior to 2016....4-4
Frame - Tow Between....4-6
9365 and 9450....4-6
9445, 9550 and 9650 - Prior to 2016....4-8
Frame....4-10
9445, 9550 and 9650 - 2016 to Present....4-10
9800 and 91000....4-12
Rear Axle Assembly....4-14
9445, 9550 and 9650 - 2016 to Present....4-14
9800 and 91000....4-15
Castor Axle....4-16
9365 and 9450 - Tow Behind....4-16
Quad Steer Axle....4-17
Tongue Support - 9365, 9450 and 9535....4-17
Tongue Support - 9445, 9550 and 9650 - Prior to 2015....4-17
9365, 9450 and 9535 - Prior to 2021....4-18
9445, 9550 and 9650 - Prior to 2015....4-18
9365, 9450 and 9535 - 2021 to Present....4-20
9445, 9550 and 9650 - 2015 to Present....4-24
9800 and 91000....4-28
Hydraulic Hitch Jack - Tow Between....4-32
9445, 9550, 9650 and 9800 - Standard....4-32
9365, 9450 and 9535 - Optional....4-32
Hydraulics....4-33
Hydraulic Hose Holders - Tow Between Hitch....4-34

Section 5:
Hitching....5-1
Tow Behind 9360 and 9450 - Except Quad Steer....5-2
Quad Steer Hitch - Maxim II....5-4
Quad Steer Hitch - Maxim III....5-5
Concept 2000 Tow Hitch....5-6
Quad Steer Hitch - Contour Drill....5-7
Quad Steer Hitch - RAZR....5-8
Rear Tow Hitch....5-9

Section 6:
Wheel & Hub....6-1
Rear Hub & Tire....6-2
Single Tire - 9365, 9450 and 9535....6-2
Single Tire - Tow Behind - 9445, 9550 and 9650 - Prior to 2016....6-2
Single Tire - Tow Behind - 9445, 9550 and 9650 - 2016 to Present....6-3
520 Dual Tire Option....6-4
800 Dual Option - Tow Behind - 9365, 9450 and 9535....6-5
800 Dual Option - Tow Behind - 9445, 9550 and 9650 - Prior to 2016....6-5
800 Dual Tire - Tow Between - 9445, 9550 and 9650 - Prior to 2016....6-6

Table of Contents

800 Dual Tire - 9445, 9550 and 9650 - 2016 to Present....6-7
800 Dual Tire - 9800 - Prior to 2016....6-8
Dual Tires - 9800 and 91000 - 2016 to 2020....6-9
Dual Tires - 9800 and 91000 - 2020 to 2022....6-10
Dual Tires - 9800 and 91000 - 2022 to Present....6-11
Front Hub & Tire....6-12
Front Castor Axle - Tow Behind - 9365 and 9450....6-12
Quad Steer Axle - 9365, 9450 and 9535 - Prior to 2021....6-13
Quad Steer Axle - 9445, 9550 and 9650 - Prior to 2015....6-13
Quad Steer Axle - 9365, 9450 and 9535 - 2021 to Present....6-14
Quad Steer Axle - 9445, 9550 and 9650 - 2015 to Present....6-14
Quad Steer Axle - 9800 and 91000....6-15

Section 7:
Transmissions - Ground Drive....7-1
Meter Drive....7-3
Mounting Bolts....7-3
Rate Change Sprockets....7-4
Spacing Sprockets....7-5
Standard Drive Coupler....7-6
3rd Between Cover Panel Mount....7-7
Idler Arm 1st & 2nd Tanks....7-8
Idler Arm 3rd & 4th Tanks....7-9
Dual Sprocket Idler Assemblys....7-10
Tow Between 9445, 9550 & 9650 Idlers 4th & 3rd Transmissions....7-12
Secondary Clutch....7-14
Meter Drive Chains....7-15
9365, 9450 and 9535....7-15
9445, 9550 and 9650 - Tow Behind - Prior to 2016....7-17
9445, 9550 and 9650 - Tow Between - Prior to 2016....7-20
9445, 9550 and 9650 - 2016 to Present....7-24
9800 and 91000....7-28
Calibration Manual....7-34
Calibration Crank Assembly....7-34
Crank Holder....7-35
Calibration Hydraulic - Optional....7-36
Transmission 9365, 9450 & 9535....7-36
Transmission 9445, 9550, 9650, 9800 & 91000 - Optional....7-38
Jack Shaft....7-40
9365, 9450, 9535....7-40
9445, 9550, 9650 - Tow Behind - Prior to 2016....7-42
9445, 9550 & 9650 - Tow Between - Proir to 2016....7-44
9445, 9550 & 9650 - Tow Between and Tow Behind - Duals....7-46
9800 - Tow Between and Tow Behind - Forward Axle Location....7-46
9445, 9550 & 9650 - Tow Behind - Single 900 Tire....7-48
9800 and 91000 - Rear Axle Location....7-48
9800 and 91000 - Rear Axle Location....7-49
Transmission....7-50
Small Frame Standard Drive....7-50
Small Frame Standard Drive Rear....7-52
Large Frame Standard Drive....7-54
Large Frame Behind Standard Drive Rear....7-56
Large Frame Between Standard Drive Rear....7-58
Standard Drive Rear - 9800 and 91000....7-60
Transmission Cover - Tow Behind 9445, 9550 & 9650 Narrow Transport....7-62

Table of Contents

Section 8:
Transmission - Variable Rate 8-1
VR Drive Coupler 8-2
Mounting Bolts 8-3
9365, 9450 & 9535 Transmission (Prior to 2017) 8-4
9365, 9450 & 9535 Transmission 8-6
9365, 9450 & 9535 Rear Transmission (Prior to 2017) 8-8
9365, 9450 & 9535 Rear Transmission 8-10
9445, 9550 , 9650, 9800 & 91000 Transmission (Prior to 2017) 8-12
9445, 9550 , 9650, 9800 & 91000 Transmission 8-14
9445, 9550 & 9650 Tow Behind Transmission Rear (Prior to 2016) 8-16
9445, 9550 & 9650 Tow Between Transmission Rear (Prior to 2016) 8-18
9445,9550, 9650, 9800 & 91000 Transmission Rear (Prior to 2017) 8-20
9445,9550, 9650, 9800 & 91000 Transmission Rear 8-22
Transmission Cover - Tow Behind 9445, 9550 & 9650 Narrow Transport 8-24
Transmission Orbit Motor 8-25

Section 9:
Metering System 9-1
9 Wide Metering 9-2
Meter Body 9-2
Meter Body - Access Door 9-4
Double Shoot Collector Body 9-6
Single Shoot Collector Body 9-8
10 Wide Metering 9-10
Meter Body 9-10
Meter Body - Access Door 9-12
Double Shoot Collector Body 9-14
Single Shoot Collector Body 9-16
Sample Collection Tray 9-18
9365, 9450 and 9535 9-18
9445, 9550 and 9650 9-19
9800 and 91000 9-20
Cleanout Shoot 9-22
Broadcast Collector Body - 9 Wide 9-23

Section 10:
Distribution 10-1
Distribution - Tow Behind 10-2
Distribution - Tow Between 10-14
Quick Coupler 10-26
Divider Head - 1 Outlets 10-28
Divider Head - 1 1/8 Outlets 10-34
Deflectors Assembly 10-40
Plenum - Dual Fan 10-44
Plenum - Single Fan 10-46
Pipe Cross Reference Chart 10-48
Stainless Head Conversion Kits 10-49
Stainless Head Conversion 10-50
Divider Head Assembly 10-52
Regular 1 inch Square Fingers 10-52

Section 11:
Fan 11-1
Single Fan - Tow Between 11-3
Dual Fan - Tow Between 11-4

Single Fan - Tow Behind 11-6
Dual Fan - Tow Behind 11-8
Orbit Motor 11-10

Section 12:
Auger & Conveyor 12-1
Valve and Control Mount 12-2
Version 2 - Prior to 2016 12-4
Auger/Conveyor Valve Mount Behind 12-6
Auger/Conveyor Valve Mount Between 12-7
Auger - 10 Inch 12-8
Auger Arms Assembly - Standard - Prior To 2018 12-8
Auger Arms Assembly - Standard - 2018 to Present 12-10
Optional Outer Arm Lock Kit - N53934 12-12
Auger Arms with Hydrualic Assist Assembly - Prior To 2018 12-14
Auger Arms with Hydrualic Assist Assembly - 2018 to Present 12-16
10" Auger Assembly 12-18
Auger Spout - Prior to 2014 12-20
Auger Hopper - Standard 12-21
10" Extended Hopper 12-22
Auger - 12 Inch 12-24
Auger Arms 12-24
12" Auger Assembly - Single Flow Hydraulics 12-26
12" Auger Assembly - Dual Flow Hydraulics 12-28
12" Extended Hopper 12-30
Conveyor 12-32
Arms - 22 ft and 23 ft Conveyor - Prior to 2018 12-32
Arms - 22 ft and 23 ft Conveyor - 2018 to Present 12-34
Arms - 25 ft Conveyor 12-36
Conveyor Assembly 12-38
22 ft and 23 ft Conveyor 12-38
25 ft Conveyor 12-40
Conveyor - Lower End Group 12-42
22ft and 23 ft Conveyor - Rigid Rubber Hopper - SN 14809 to 16187 12-42
23 ft Conveyor - Collapsible Hopper - SN 16188 to SN 20521 12-44
23 ft Conveyor - Collapsible Hopper - SN 20522 and later 12-46
25 ft Conveyor - Collapsible Hopper 12-48
Conveyor - Upper End Group 12-50
22 ft Conveyor 12-50
23 ft and 25 ft Conveyor - SN 16185 to 20521 12-51
23 and 25 ft Conveyor - SN 20522 and Later 12-52
Orbit Motor 12-56

Section 13:
Hydraulics - Auger/Conveyor 13-1
10” Auger Hydraulics 13-2
Standard Arms 13-2
Hydraulic Assisted Arms 13-4
Extended Hopper 13-6
12” Auger Hydraulics 13-8
Extended Hopper - Prior to 2020 13-8
12” Auger Hydraulics 13-10
Extended Hopper - 2020 to Present 13-10
Hydraulic Assisted Arms and Locks 13-12
Conveyor Hydraulics 13-14

Table of Contents

22 ft and 23 ft 13-14
25 ft - Prior to 2023 13-16
25 ft - 2023 to Present 13-18
Valve Block - N51275 13-20
Valve Block - N58555 13-21
Valve Block - N58349 13-22
Orbit Motor 13-23

Section 14:
Hydraulics - Ground Drive - March 2014 to Present 14-1
Hydraulic - Standard 14-2
9365, 9450, 9535 Tow Behind 14-2
9445, 9550, 9650 Tow Behind 14-5
9800 and 91000 Tow Behind 14-8
9365, 9450 Tow Between 14-12
9445, 9550, 9650 Tow Between 14-15
9800 Tow Between 14-18
Tow Between - Hitch Jack Hydraulics 14-21
Dual Fan Hydraulic - Option 14-22
Tow Behind 14-22
Tow Between 14-24
Dual Flow Hydraulics - 12” Auger - Option 14-26
9800 and 91000 Tow Behind - Single Fan 14-26
9800 and 91000 Tow Behind - Dual Fan 14-29
9800 Tow Between - Single Fan 14-32
9800 Tow Between - Dual Fans 14-35
Dual Flow Hydraulics - Conveyor - Option 14-38
9800 and 91000 Tow Behind - Single Fan 14-38
9800 and 91000 Tow Behind - Dual Fan 14-41
9800 Tow Between - Single Fan 14-44
9800 Tow Between - Dual Fans 14-47
Calibration Hydraulics - Option 14-51
9365, 9450 , 9535, 9445, 9550, 9650 - Tow Behind 14-51
9365, 9450, 9445, 9550, 9650 - Tow Between 14-53
9800 and 91000 14-55
Valve Block N56575 14-57
Meter Shutoff Hydraulics 14-58
Electrical 14-58
9365, 9450 & 9535 14-59
9445, 9550 & 9650 14-61
Hydraulic Tip Adapter Kit 14-63

Section 15:
Hydraulics - Ground Drive - Prior to March 2014 15-1
9365, 9450, 9535 Tow Behind - STD 15-2
9445, 9550, 9650 Tow Behind - STD 15-5
9365, 9450 Tow Between - STD 15-8
9445, 9550, 9650 Tow Between - STD 15-11
Hydraulic Hitch Jack - 9445, 9550, 9650 Tow Between 15-14
Tow Behind Hydraulic Extension Kit for Rear Tow Hitch 15-15
Dual Fan - Tow Behind 15-16
Dual Fan - Tow Between 15-18
Meter Shutoff Hydraulics - 9365, 9450 & 9535 15-20
Meter Shutoff Hydraulics - 9445, 9550 & 9650 15-22
Meter Shutoff Electrical 15-24

Table of Contents

Section 16:
Hydraulics - Variable Rate - May 2018 to Present 16-1
Hydraulic - Fan VRT 16-2
9365, 9450, 9535 Tow Behind 16-2
9445, 9550, 9650 Tow Behind 16-5
9800 and 91000 Tow Behind 16-8
9365, 9450 Tow Between Hydraulic 16-11
9445, 9550, 9650 Tow Between Hydraulic 16-14
9800 Tow Between Hydraulic 16-17
Dual Fan Hydraulic - Option 16-20
Tow Behind 16-20
Tow Between 16-22
Dual Flow Hydraulics - 12” Auger - Option 16-24
9800 and 91000 Tow Behind - VR Drive - Single Fan 16-24
9800 and 91000 Tow Behind - VR Drive - Dual Fan 16-27
9800 Tow Between - VR Drive - Single Fan 16-30
9800 Tow Between - VR Drive - Dual Fans 16-33
Dual Flow Hydraulic - Converyor - Option 16-36
9800 and 91000 Tow Behind - VR Drive - Single Fan 16-36
9800 and 91000 Tow Behind - VR Drive - Dual Fan 16-39
9800 Tow Between - VR Drive - Single Fan 16-42
9800 Tow Between - VR Drive - Dual Fan 16-45
Valve Manifold 16-48
Transmission Orbit Motor 16-49

Section 17:
Hydraulics - Variable Rate - March 2014 to May 2018 17-1
9365, 9450, 9535 Tow Behind - Fan VRT 17-2
9445, 9550, 9650 Tow Behind - Fan VRT 17-5
9800 and 91000 Tow Behind - Fan VRT 17-8
9365, 9450 Tow Between Hydraulic - Fan VRT 17-11
9445, 9550, 9650 Tow Between Hydraulic - Fan VRT 17-14
9800 Tow Between Hydraulic - Fan VRT 17-17
Dual Fan - Tow Behind 17-20
Dual Fan - Tow Between VRT 17-22
Valve Manifold - 4 Bank 17-24

Section 18:
Hydraulics - Variable Rate - Prior to March 2014 18-1
9365, 9450, 9535 Tow Behind - Fan VRT 18-2
9445, 9550, 9650 Tow Behind - Fan VRT 18-5
9800 Tow Behind - Fan VRT 18-9
9365, 9450 Tow Between Hydraulic - Fan VRT 18-12
9445, 9550, 9650 Tow Between Hydraulic - Fan VRT 18-15
Dual Fan - Tow Behind 18-18
Dual Fan - Tow Between 18-20
Valve Manifold - 3 Bank 18-22
Valve Manifold - 4 Bank 18-23

Section 19:
Monitor and Clutch 19-1
Monitor - Ground Drive 19-3
Harness Connections 19-3
LOUP Elite Monitor - 2021 to Present 19-4
Version 3 Monitor - Prior to 2021 19-6

Table of Contents

FTU - Field Test Unit 19-9
Clutch Harness and Switch 19-10
Optional Clutch 19-11
Optical Blockage System 19-12
AGTRON 19-13
ART Blockage System 19-13
LEGEND Blockage System 19-14
Remote Clutch Switch - Optional 19-16
Tillage 19-16
Maxim III 19-18
C2 Contour and RAZR 19-19
Digi-Star Weigh Scale 19-20
Tow Between 19-20
Tow Behind 19-22
Variable Rate System 19-24
X20 - TopCon System 19-24
EAGLE - TopCon System 19-27
Valve and Control Mount 19-30
Valve and Control Mount Version 2 19-32
X30 with IB-1 TopCon System 19-34
Cart Harness 19-34
VR Harness 19-36
ICT System 19-38
Tractor Installation 19-40
X30 Apollo TopCon System - Prior to 2018 19-42
Control and Valve Mount 19-42
Cart Harness 19-44
ICT System 19-46
Tractor without ISO BUS - X30 Installation - 2016 19-48
Tractor without ISO BUS - X30 Installation - 2017 19-49
Seed Unit - Tow Behind Cart 19-50
AGI-4 Receiver Kit 19-51
X35 Apollo TopCon System - 2018 19-52
Control and Valve Mount 19-52
Cart Harness 19-54
ICT System 19-56
Tractor without ISO BUS - X35 Installation 19-58
Seed Unit - Tow Behind Cart 19-59
X35 Apollo TopCon System - 2019 to present 19-60
Control and Valve Mount 19-60
2018 Harness Transition - Tow Behind 19-62
Cart Harness - Tow Behind 19-66
Cart Harness - Tow Between 19-68
ICT System - Tow Behind 19-70
ICT System - Tow Between 19-72
Tractor without ISO BUS - X35 Installation 19-74
AGI-4 Receiver Kit 19-75
QUANTUM 19-76
Apollo - Lift and Pressure Control Kit 19-76
Liquid and NH3 System 19-78

Section 20:
Lighting and Safety Signs 20-1
Light Harness Connections 20-2
Work Lights 20-3

Marking Lights....20-4
Light Brace Kit....20-6
Auger Lights and Full Tank Indicator - Prior to 2016....20-8
Auger Lights and Full Tank Indicator - 2016 to Present....20-10
Stair Down Warning Light - Ladder Mount - Prior to 2016....20-13
Stair Down Warning Light - Frame Mount....20-14
SMV Sign....20-15
Safety Signs....20-16
Decals....20-16
Front....20-18
Rear....20-19
Left Side - Tow Between....20-20
Right Side - Tow Between....20-21
Left Side - Tow Behind....20-22
Right Side - Tow Behind....20-23
Top....20-24
ICT Decals....20-25
ICT Meter Body....20-26

Section 21:
Brakes....21-1
Hydraulics and Electrical - Version 1....21-2
Hydraulics and Electrical - Version 2....21-4
Brake Caliper....21-6

Section 22:
ICT Metering System....22-1
ICT Meter Body....22-2
Module Assembly....22-2
Swing Arm Assembly - Prior to 2022....22-4
Swing Arm Assembly - 2022 to Present....22-5
Access Door Assembly....22-6
Agitator Shaft Assembly....22-8
Blank Off....22-10
Clean Out Door....22-11
Single Shoot Collector Body....22-12
Double Shoot Collector Body....22-14
ICT Hydraulics....22-16
9535, 9650, 9800 and 91000 - 2022....22-16
9450, 9550 and 9680 - 2022....22-18
9365, 9445 and 9555 - 2022....22-20
9535, 9650, 9800 and 91000 - Prior to 2022....22-22
9450, 9550 and 9680 - Prior to 2022....22-24
9365, 9445 and 9555 - Prior to 2022....22-26
ICT Transmissions....22-28
Front - 9365, 9450, 9535 (Prior to 2017)....22-28
Front - 9365, 9450, 9535....22-30
Rear - 9365, 9450, 9535 (Prior to 2017)....22-32
Rear - 9365, 9450, 9535....22-34
9445, 9550, 9650, 9800 and 91000 (Prior to 2017)....22-36
9445, 9550, 9650, 9800 and 91000....22-38
Rear - 9445, 9550, 9650 Between - Prior to 2016....22-40
Drive Coupler....22-43
Valve Block - N48750....22-44
Valve Block - N58320....22-45

Table of Contents

Sample Collection Tray 22-46
Transmission Orbit Motor.....22-50

Index i

Section 1:
Tanks and Stairway

Section Contents

Tanks 1-2
- Tank Combinations 1-2
- One Panel Access 1-4
- Two Panel Access 1-5
- Large Tank Ladder 1-6
- Small Tank Ladder 1-7

Tank Lids - Prior to 2018 1-8
Tank Lids - 2018 to Present 1-10
Stairway 1-12
- Stairway - Prior to 2016 1-12
- Fixed Handrails - 2016 to 2018 1-14
- Folding Handrails - 2018 to Present 1-16
- Stair Assist - 2016 to Present 1-18
- Small Frame Stairway 1-20
- Large Frame Stairway 1-22

Models: 9365, 9450, 9535, 9445, 9550 & 9650

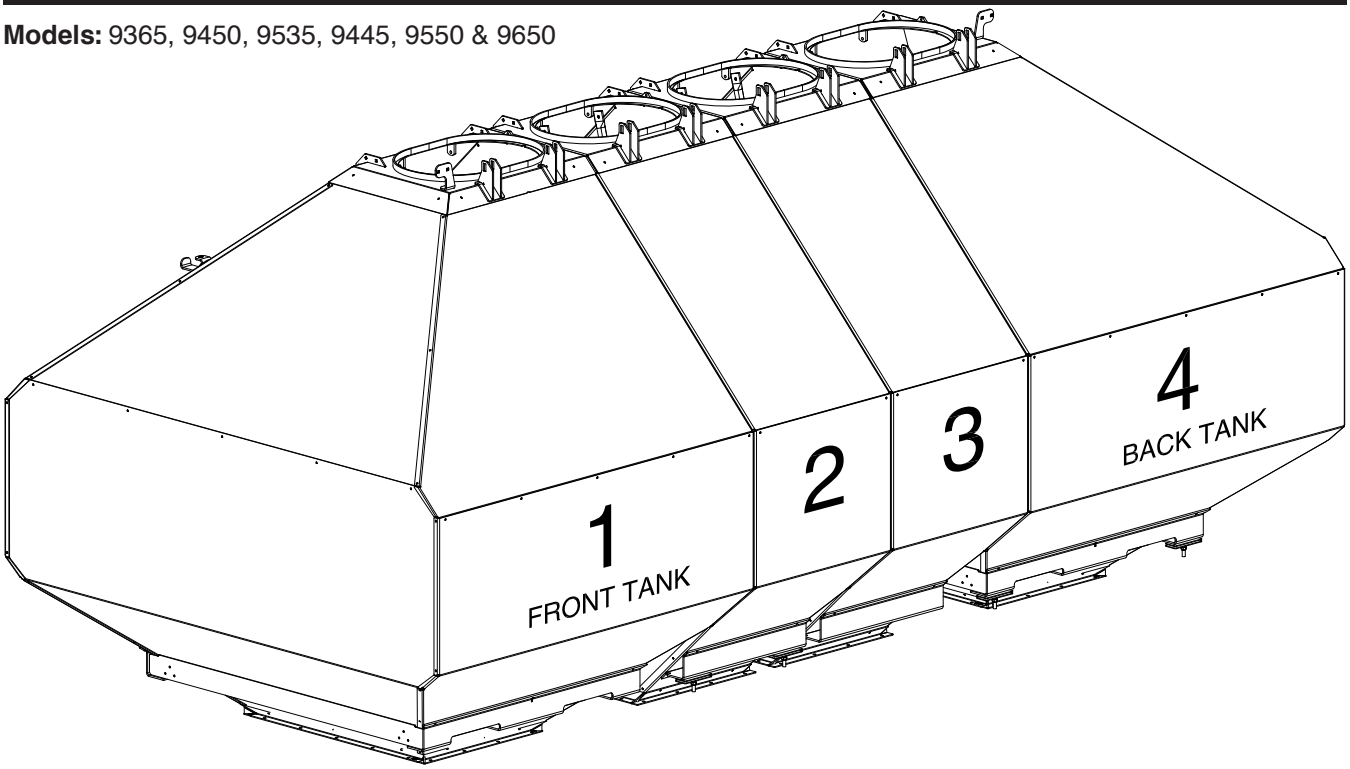

Small Frame

Tank #	**9365**	Tank #	**9450**	Tank #	**9535**
4	N48960	4	N48960	4	N48960
1	N48970	3	N48980	3	N48980
		1	N48970	2	N48980
				1	N48970

Large Frame

Tank #	**9445**	Tank #	**9550**	Tank #	**9650**
4	N49670	4	N49670	4	N49670
1	N49690	3	N49680	3	N49680
		1	N49690	2	N49680
				1	N49690

9800 and 91000 Frame

Tank #	**9555**	Tank #	**9680**	Tank #	**9800**
4	N51670	4	N51670	4	N51670
1	N51690	3	N51680	3	N51680
		1	N51690	2	N51680
				1	N51690

Tank #	**91000**	
4	N55570	Bottom N55520
3	N55580	Bottom N55530
2	N55580	Bottom N55530
1	N55590	Bottom N55520

Tanks
Tank Combinations

Models: 9555, 9680, 9800 & 91000

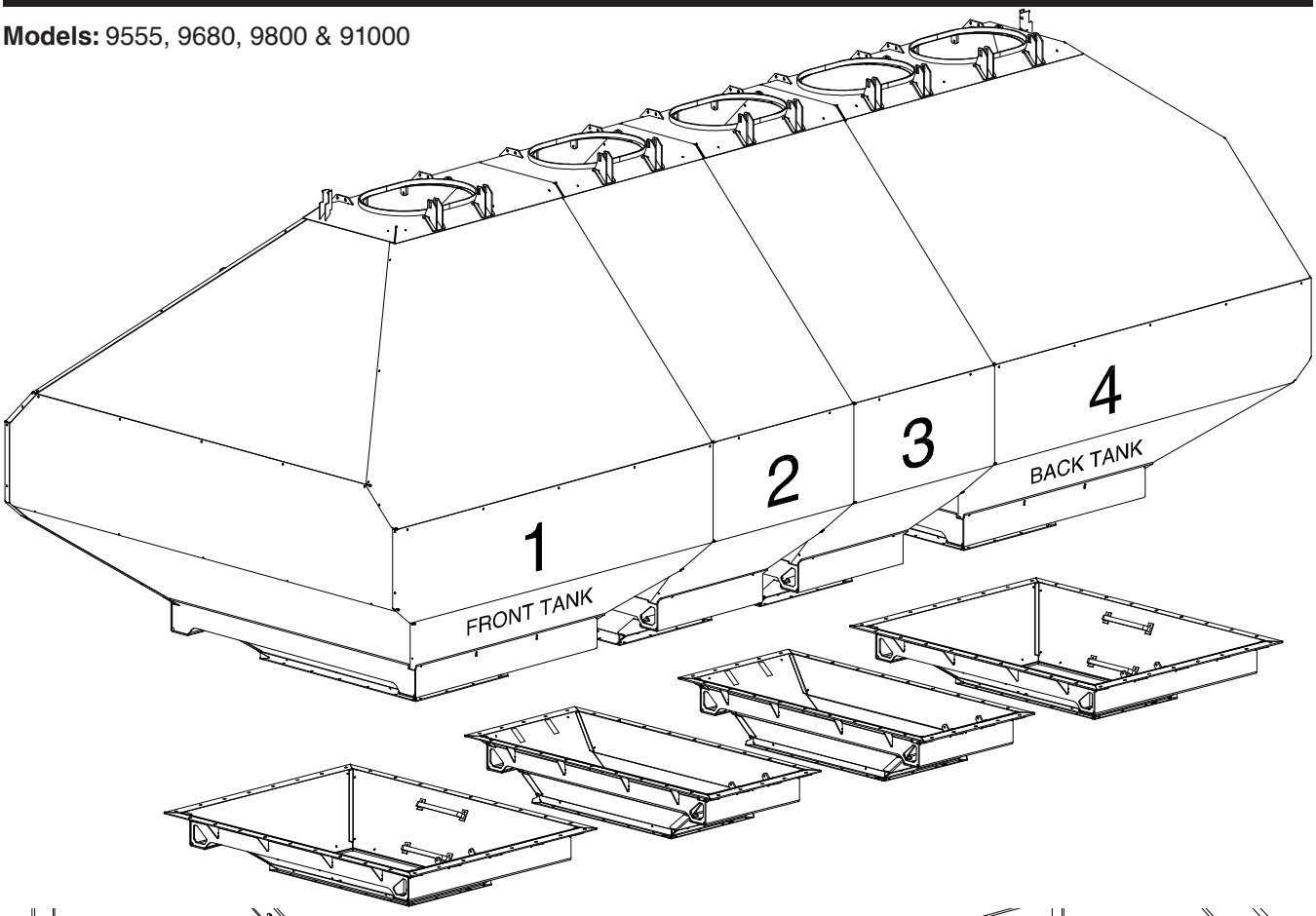

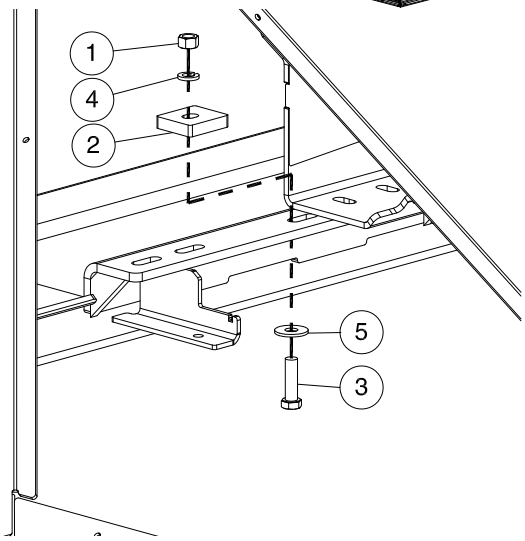

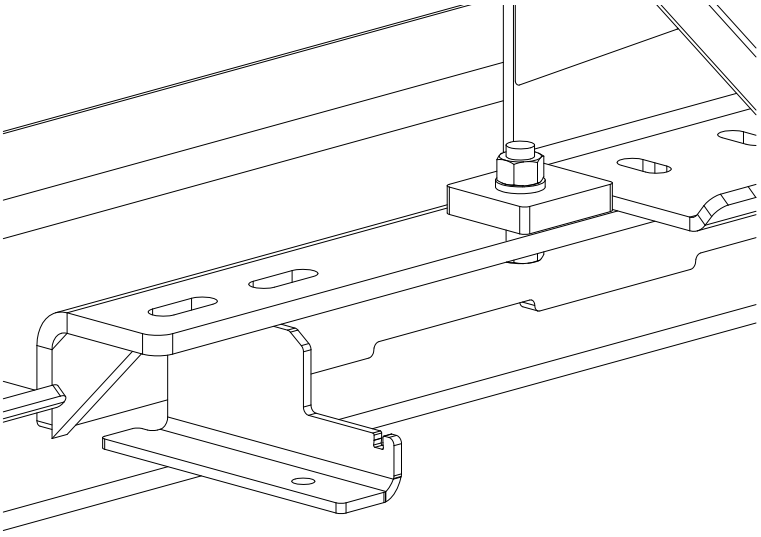

Item	Part No.	Description	Qty
1	F-4340	Hex Nut - 1/2 - Grade 8	2
2	N62017	Plate - Stopper - 9650 3 Tank - 2 x 2 3/16 Lg - 1 Slot	2
	N62018	Plate - Stopper - 9650 4 Tank - 2 x 2 1/4 Lg - 1 Slot	2
	N62016	Plate - Stopper - 9800/91000 - 2 x 3 1/32 Lg - 2 Slot	2
3	W-487	Hex Bolt - 1/2 x 1 3/4 Lg	2
4	W-525	Lockwasher - 1/2	2
5	W-539	Washer - 1/2	2

Tanks
One Panel Access

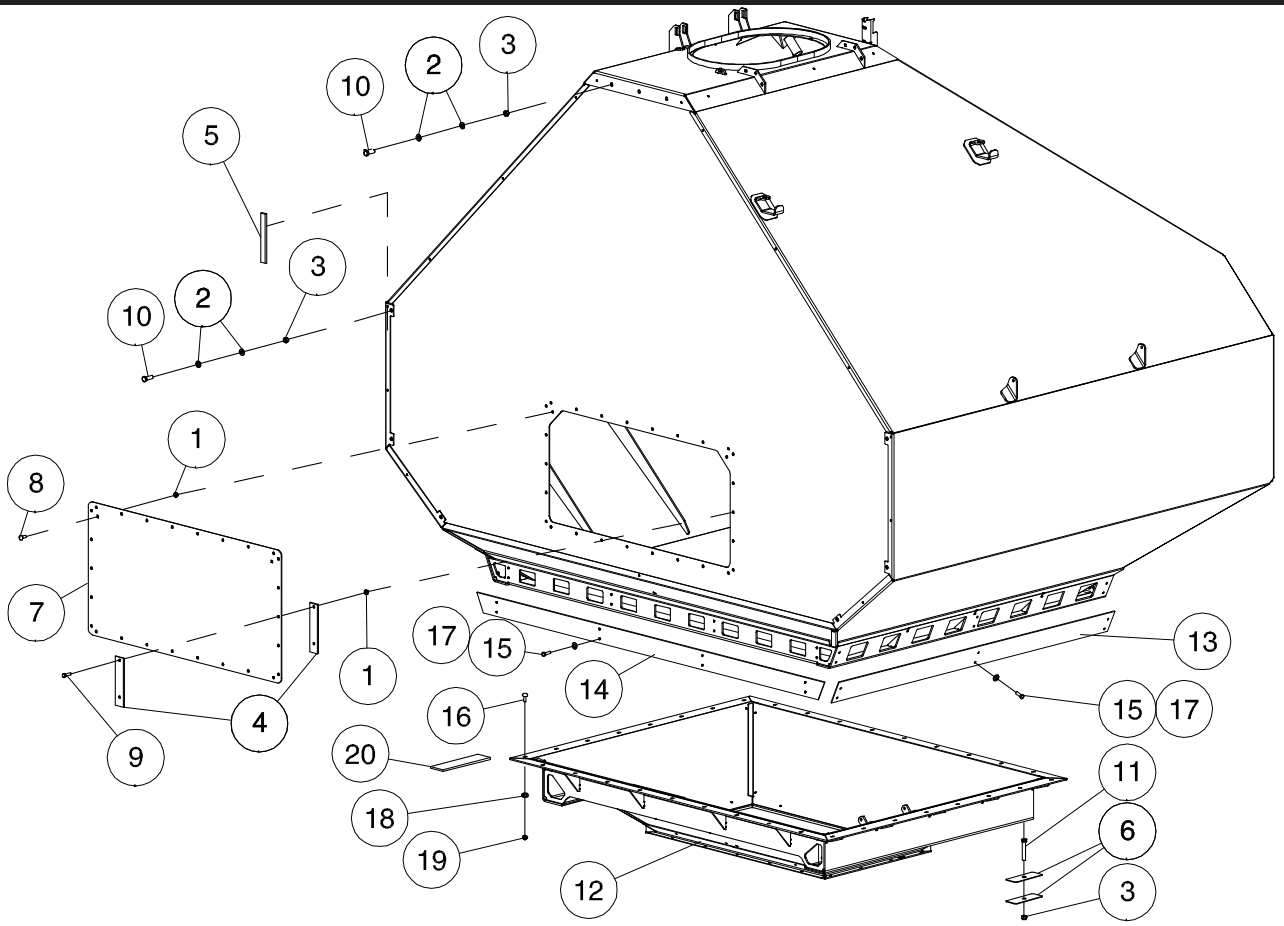

Item	Part No.	Description	Qty
1	D-5279	Lock Nut - 3/8 Flange	28
2	S-1925	Washer - 17/32 ID x 1 OD x 13 Ga	18
3	F-3405	Locknut - 1/2 Unitorque	13
4	N13900	Seal Strip - 3/16 x 1 3/4 (Bulk/Ft) **- 9365 to 9650**	12ft
	N13900	Seal Strip - 3/16 x 1 3/4 (Bulk/Ft) **- 9800 and 91000**	21ft
5	N15716	Seal Strip - 1/4 x 1 (Bulk/Ft) **- 9365 to 9650**	26ft
	N15716	Seal Strip - 1/4 x 1 (Bulk/Ft) **- 9800 and 91000**	27ft
6	N37660	Shim - 12 Ga (as required)	8
7	**N40982**	**Divider Panel - 22 1/4 x 35 1/4 - 9365 to 9650**	**1**
	N51710	**Divider Panel - 23 x 45 3/4 - 9800 and 91000**	**1**
8	P7C616	Carriage Bolt - 3/8 x 1 Lg	2
9	W-187	Hex Bolt - 3/8 x 1 1/4 Lg	26
10	S-776	Hex Bolt - 1/2 x 1 1/2 Lg	9
11	W-492	Hex Bolt - 1/2 x 3 Lg	4
12	N55520	Tank Bottom - 91000 Front and Rear Tanks	1
	N55530	Tank Bottom - 91000 Middle Tanks	1
13	N55521	Cover Plate - 64 1/4 Lg - 91000 Front and Rear Tanks	2
	N55531	Cover Plate - 34 1/4 Lg - 91000 Middle Tanks	2
14	N55541	Cover Plate - 2 11/16 x 74 Lg - 91000 Front and Rear Tanks	2
	N55532	Cover Plate - 2 1/4 x 74 Lg - 91000 Middle Tanks	2
15	F-1767	Hex Bolt - 5/16 x 3/4 Lg	24
16	D-5260	Carriage Bolt - 3/8 x 1 1/4 Lg (QTY of 28 for Middle Tanks)	34
17	D-5488	Washer - 11/32 ID x 11/16 OD x 16 Ga	24
18	D-5489	Flat Washer - 13/32 ID x 13/16 OD x 16 GA (QTY of 28 for Middle Tanks)	34
19	D-5279	Lock Nut - 3/8 Flanged (QTY of 28 for Middle Tanks)	34
20	N37190	Seal Strip - 1/4 x 1 3/8 (Bulk/Ft) **- 91000** (QTY of 38 ft for Middle Tanks)	46ft
	N16170	Clear Silicon 305ml - Tank Panel assembly	AsReq

Tanks
Two Panel Access

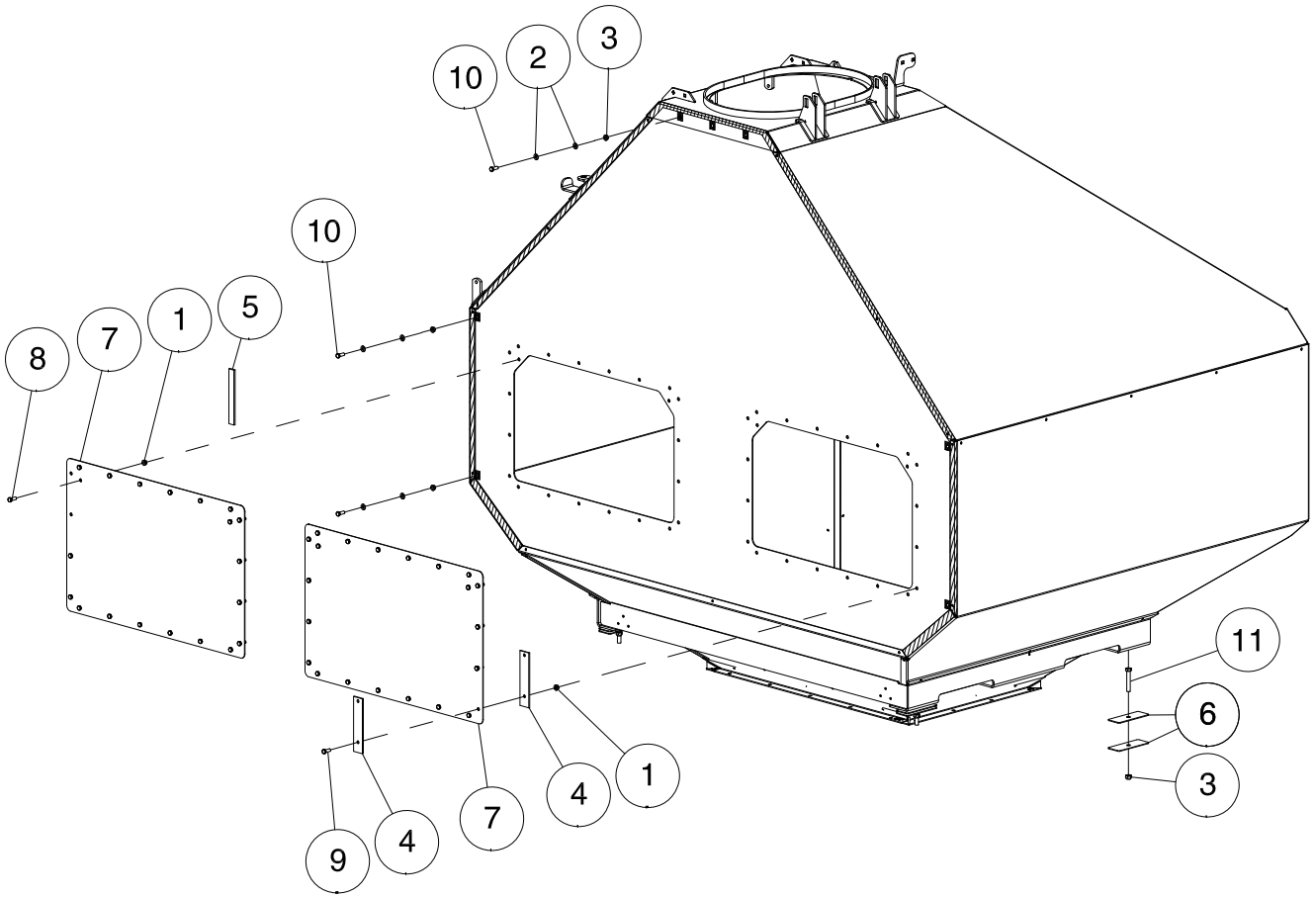

Item	Part No.	Description	Qty
1	D-5279	Lock Nut - 3/8 Flange	44
2	S-1925	Washer - 17/32 ID x 1 OD x 13 Ga	14
3	F-3405	Locknut - 1/2 Unitorque	11
4	N13900	Seal Strip - 3/16 x 1 3/4 (Bulk/Ft)	20ft
5	N15716	Seal Strip - 1/4 x 1 (Bulk/Ft)	23ft
6	N37660	Shim - 12 Ga (as required)	8
7	N40982	Divider Panel - 22 1/4 x 35 1/4	2
8	P7C616	Carriage Bolt - 3/8 x 1 Lg	4
9	W-187	Hex Bolt - 3/8 x 1 1/4 Lg	40
10	S-776	Hex Bolt - 1/2 x 1 1/2 Lg	7
11	W-492	Hex Bolt - 1/2 x 3 Lg	4
	N16170	Clear Silicon 305ml - Tank Panel assembly	AsReq

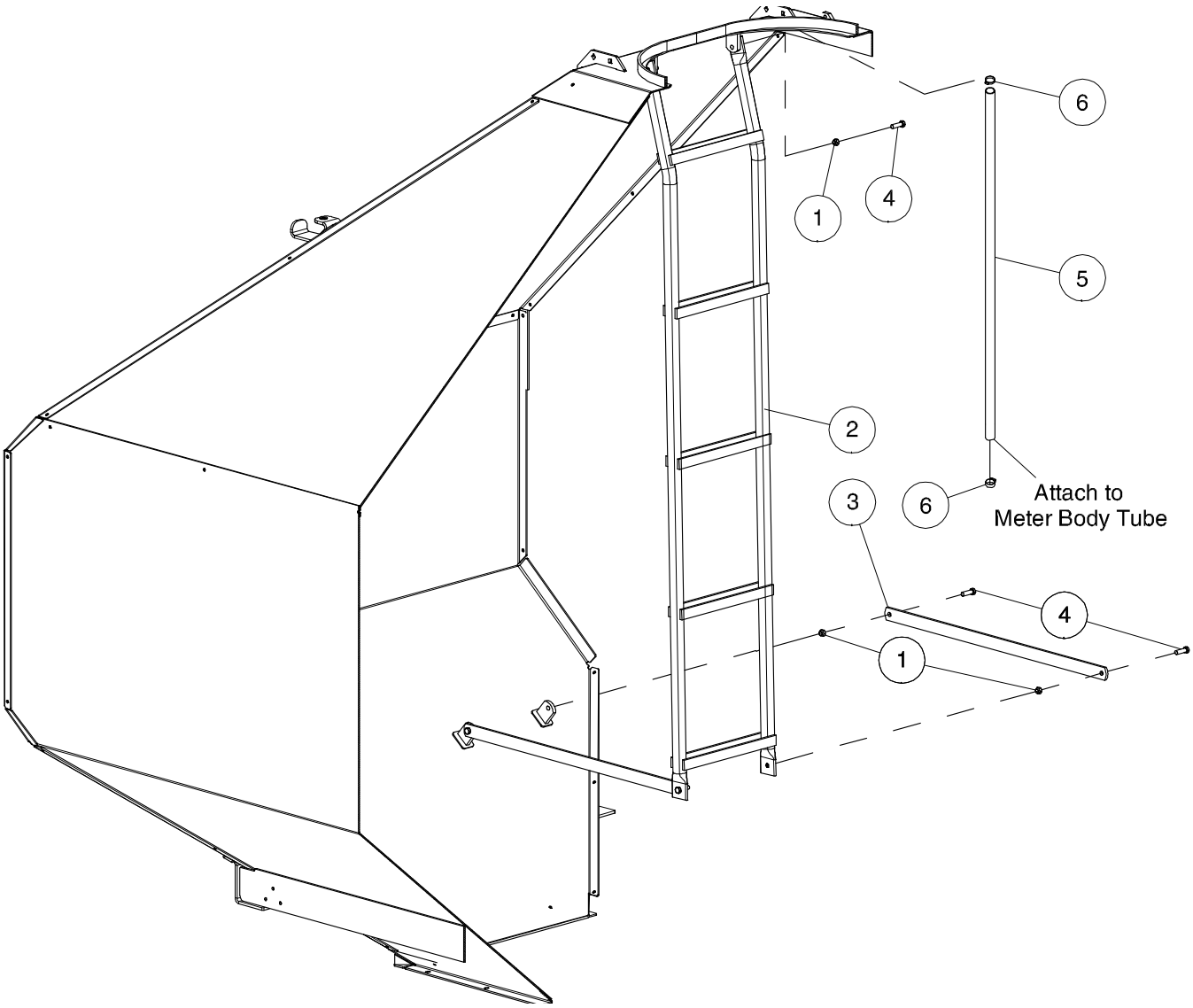

Item	Part No.	Description	Qty
1	M-3388	Locknut - 3/8 Unitorque	6
2	N40650	Inner Tank Ladder - 71 3/16 hole centers	1
	N44505	Inner Tank Ladder - 75 5/8 hole centers (9800)	1
	N55505	Inner Tank Ladder - 87 5/8 hole centers (91000)	1
3	N49221	Ladder Link - 1/4 x 1 1/4 x 30 1/8 Lg - 28 7/8 hole centers	2
	N51855	Ladder Link - 3/8 x 1 1/4 x 28 1/2 LG - 27 1/2 hole centers (9800 and 91000)	2
4	W-187	Hex Bolt - 3/8 X 1 1/4 Lg	6
5	N73072	Hose - 1 1/2 ID (Bulk/ft) x 11 ft (9365, 9450 and 9535)	2
	N73072	Hose - 1 1/2 ID (Bulk/ft) x 13 ft (9445, 9550 and 9650)	2
	N73072	Hose - 1 1/2 ID (Bulk/ft) x 14 ft (9555, 9680 and 9800)	2
	N73072	Hose - 1 1/2 ID (Bulk/ft) x 15 ft (91000)	2
6	N11906	Hose Clamp - 1 1/2 Dia	4

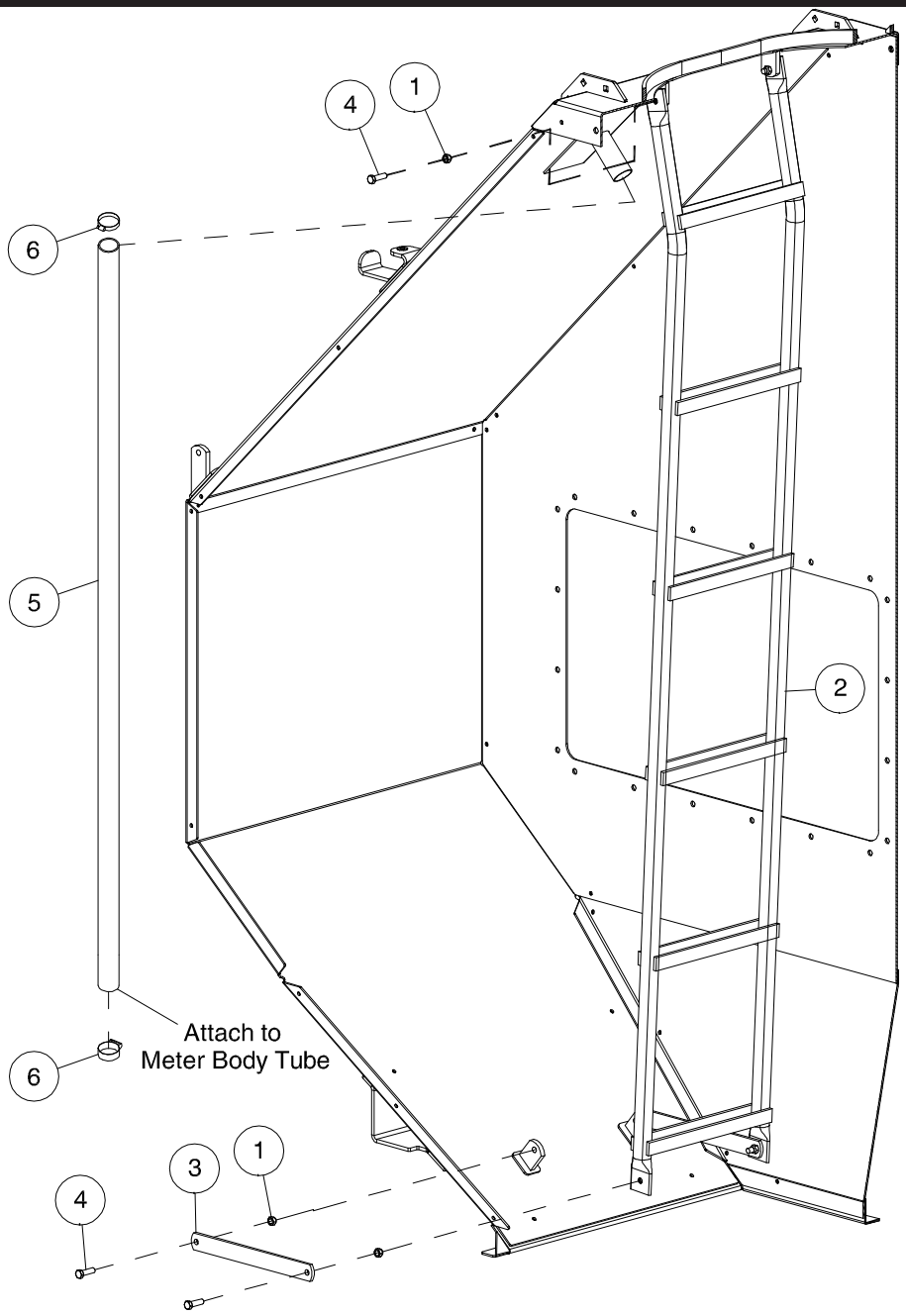

Item	Part No.	Description	Qty
1	M-3388	Locknut - 3/8 Unitorque	6
2	N40650	Inner Tank Ladder - 71 3/16 hole centers	1
	N44505	Inner Tank Ladder - 75 5/8 hole centers (9800)	1
	N55505	Inner Tank Ladder - 87 5/8 hole centers (91000)	1
3	N49219	Ladder Link - 1/4 x 1 1/4 x 12 1/4 Lg - 17 3/8 hole centers	2
	N51855	Ladder Link - 3/8 x 1 1/4 x 28 1/2 LG - 27 1/2 hole centers (9800 and 91000)	2
4	W-187	Hex Bolt - 3/8 X 1 1/4 Lg	6
5	N73072	Hose - 1 1/2 ID (Bulk/ft) x 10 ft (9365, 9450 and 9535)	2
	N73072	Hose - 1 1/2 ID (Bulk/ft) x 11 ft (9445, 9550 and 9650) (9555, 9680 and 9800)	2
	N73072	Hose - 1 1/2 ID (Bulk/ft) x 12 ft (91000)	2
6	N11906	Hose Clamp - 1 1/2 Dia	4

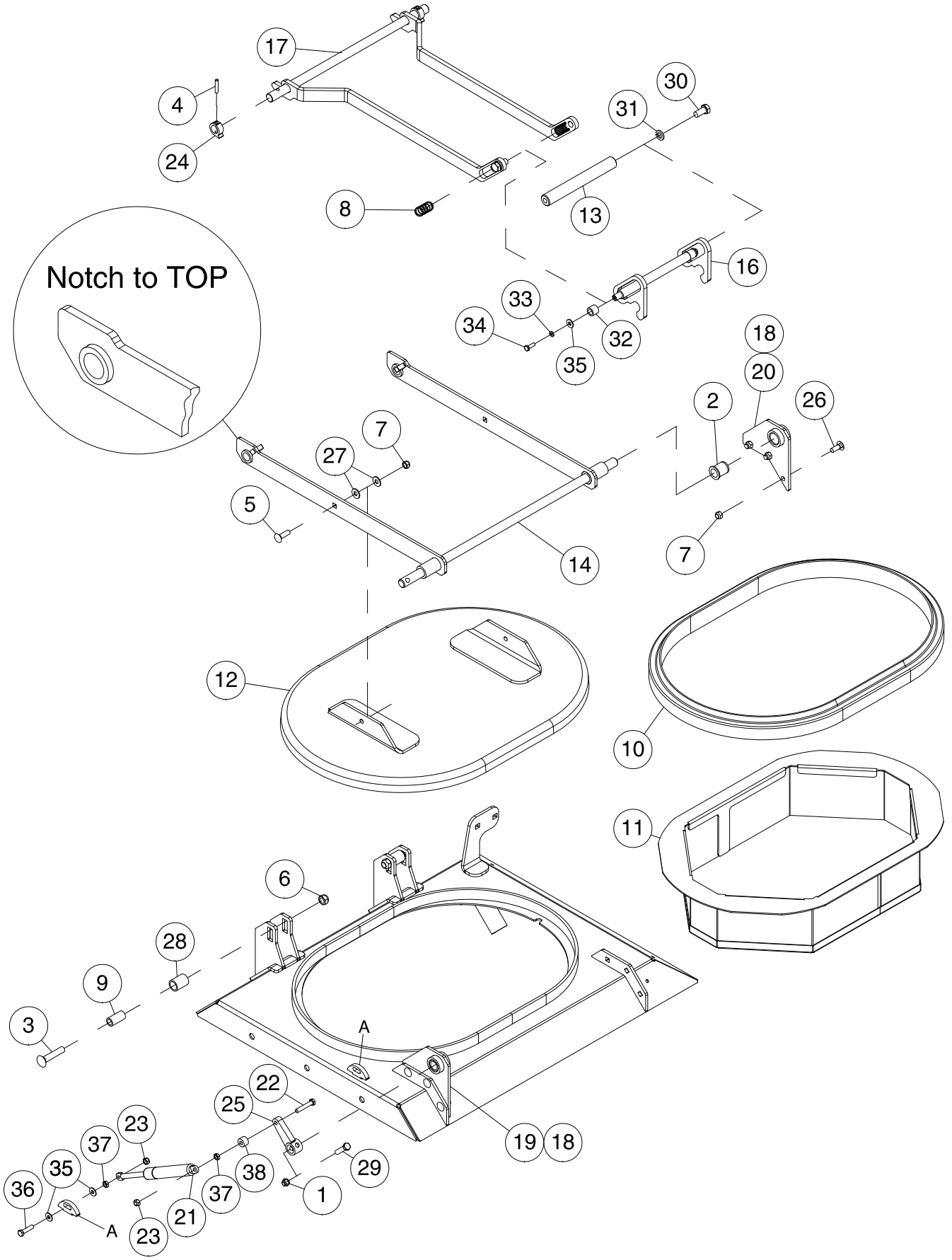
Notch to TOP
17
4
24
30
31
13
8
16
33
34
32
35
18
20
2
26
7
27
5
14
7
12
10
11
6
28
9
3
A
22
25
23
37
35
36
38
37
21
23
A
1
29
19
18

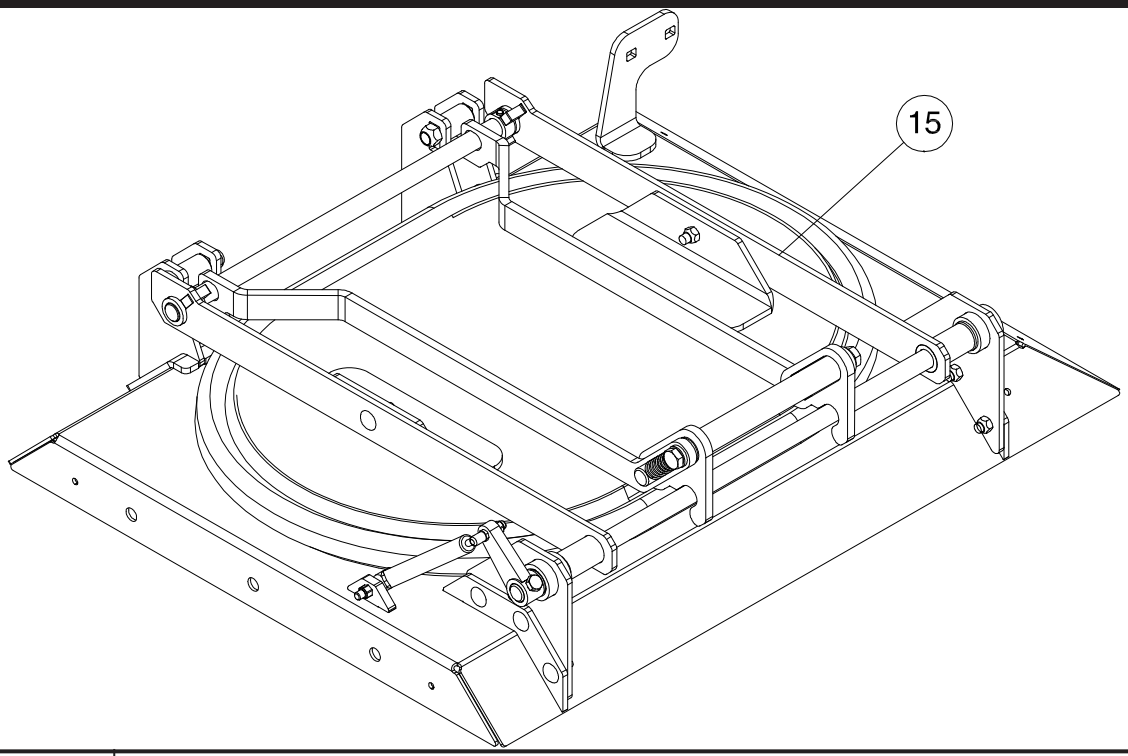

Item	Part No.	Description	Qty
1	10229	Locknut - 3/8 Nylon Insert	1
2	C26525	Nylon Bushing - 0.776 ID x 1.016 OD x 1 1/4 Lg	2
3	J12190	Carriage Bolt - 1/2 x 2 1/2 Lg	2
4	D-5243	Roll Pin - 1/4 x 1 1/4 Lg	2
5	D-5260	Carriage Bolt - 3/8 x 1 1/2 Lg	2
6	F-3405	Locknut - 1/2 Unitorque	2
7	M-3388	Locknut - 3/8 Unitorque	8
8	N11847	Spring	2
9	N36900	Bushing Spacer - 3/4 OD x .510 ID	2
10	N37711	Large Tank Lid Seal	1
11	N42190	Tank Screen	1
12	N50756	Tank Lid Pivot	1
13	N51132	Tank Lid Handle Shaft	1
14	N51134	Tank Lid Carrier	1
15	N51137	Tank Lid Assembly	1
16	N51390	Tank Lid Bar Lock	1
17	N51391	Tank Lid Torque Arm Assembly	1
18	N53063	Lid Hinge	2
19	N53321	Lid Hinge Assembly - Left - Contains Items 18 and 2	1
20	N53499	Lid Hinge Assembly - Right - Contains Items 18 and 2	1
21	N58335	Gas Compression Spring	1
22	C-3035	Hex Bolt - 5/16 x 1 1/2 Lg	1
23	D-5272	Locknut - 5/16 Unitorque	2
24	N53536	Lid Spacer Stop	2
25	N53540	Lid Torque Cam	1
26	P7C616	Carriage Bolt - 3/8 x 1	6
27	N19706	Washer - 0.406 ID x 1 1/4 OD x 0.100 thick	4
28	S49514	Packer Pivot Bushing - 3/4 ID x 1 OD x 1 5/16Lg	2
29	W-477	Hex Bolt - 3/8 x 1 1/2 Lg	1
30	W-484	Hex Bolt - 1/2 x 1 Lg - Full Thread	2
31	W-525	Lockwasher - 1/2	2
32	D-5064	Bushing Spacer - 0.51 ID x 3/4 OD x 5/8 Lg	2
33	W-521	Lockwasher - 1/4	2
34	W-469	Hex Bolt - 1/4 x 3/4 Lg	2
35	S-1198	Flat Washer - 5/16 ID x 3/4 OD x 16 Ga	4
36	W-472	Hex Bolt - 5/16 x 1 1/4 Lg	1
37	W14899	Hex Jam Nut - 5/16	2
38	N62099	Spacer Bushing - 3/8 ID x 3/4 OD x 1/2 Lg	1

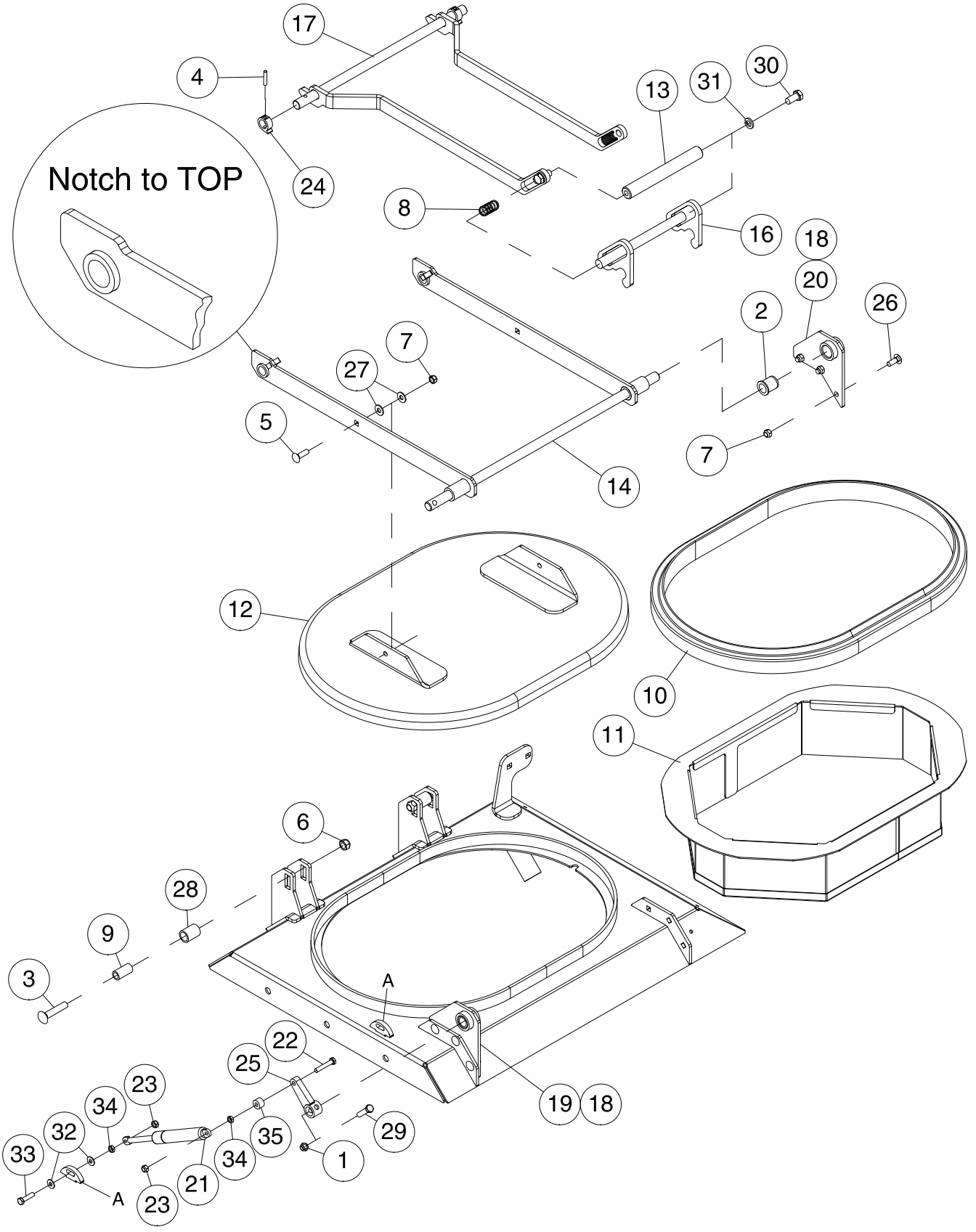
Notch to TOP
17
4
24
13
31
30
8
16
18
20
2
26
7
27
5
14
12
10
11
6
28
9
3
A
22
25
23
34
32
33
21
35
29
1
19
18

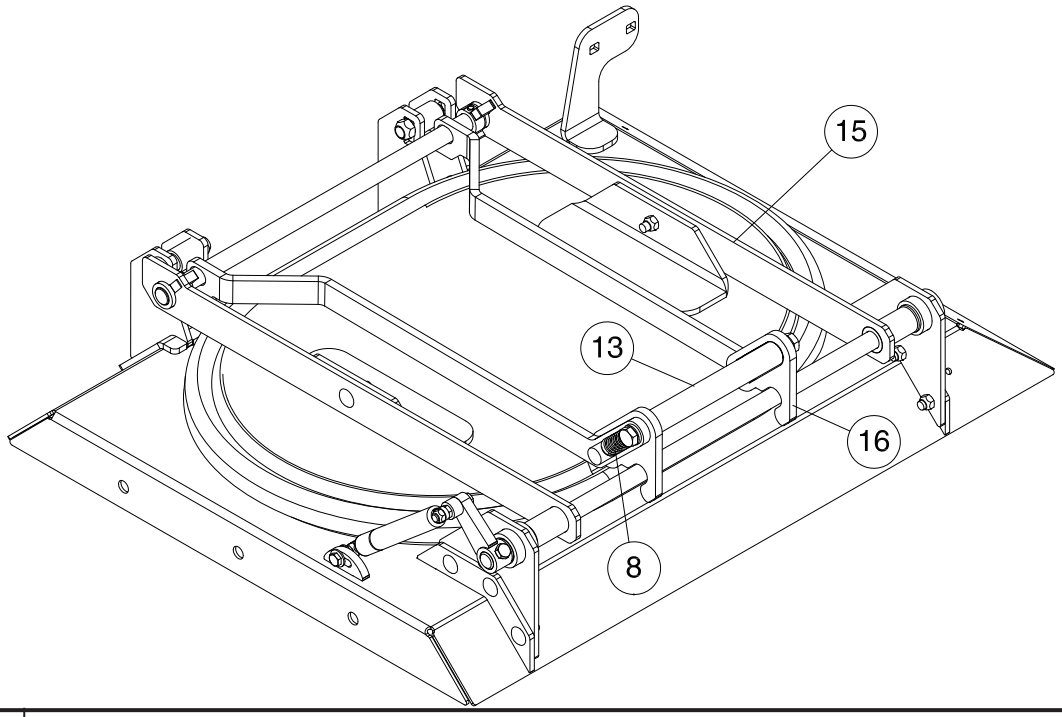

Item	Part No.	Description	Qty
1	10229	Locknut - 3/8 Nylon Insert	1
2	C26525	Nylon Bushing - 0.776 ID x 1.016 OD x 1 1/4 Lg	2
3	J12190	Carriage Bolt - 1/2 x 2 1/2 Lg	2
4	D-5243	Roll Pin - 1/4 x 1 1/4 Lg	2
5	D-5260	Carriage Bolt - 3/8 x 1 1/2 Lg	2
6	F-3405	Locknut - 1/2 Unitorque	2
7	M-3388	Locknut - 3/8 Unitorque	8
8	N11847	Spring	2
9	N36900	Bushing Spacer - 3/4 OD x .510 ID	2
10	N37711	Large Tank Lid Seal	1
11	N42190	Tank Screen	1
12	N50756	Tank Lid Pivot	1
13	N51132	Tank Lid Handle Shaft	1
14	N51134	Tank Lid Carrier	1
15	N51137	Tank Lid Assembly	1
16	N64630	Tank Lid Bar Lock	1
17	N51391	Tank Lid Torque Arm Assembly	1
18	N53063	Lid Hinge	2
19	N53321	Lid Hinge Assembly - Left - Contains Items 18 and 2	1
20	N53499	Lid Hinge Assembly - Right - Contains Items 18 and 2	1
21	N58335	Gas Compression Spring	1
22	C-3035	Hex Bolt - 5/16 x 1 1/2 Lg	1
23	D-5272	Locknut - 5/16 Unitorque	2
24	N53536	Lid Spacer Stop	2
25	N53540	Lid Torque Cam	1
26	P7C616	Carriage Bolt - 3/8 x 1	6
27	N19706	Washer - 0.406 ID x 1 1/4 OD x 0.100 thick	4
28	S49514	Packer Pivot Bushing - 3/4 ID x 1 OD x 1 5/16Lg	2
29	W-477	Hex Bolt - 3/8 x 1 1/2 Lg	1
30	W-484	Hex Bolt - 1/2 x 1 Lg - Full Thread	2
31	W-525	Lockwasher - 1/2	2
32	S-1198	Flat Washer - 5/16 ID x 3/4 OD x 16 Ga	2
33	W-472	Hex Bolt - 5/16 x 1 1/4 Lg	1
34	W14899	Hex Jam Nut - 5/16	2
35	N62099	Spacer Bushing - 3/8 ID x 3/4 OD x 1/2 Lg	1

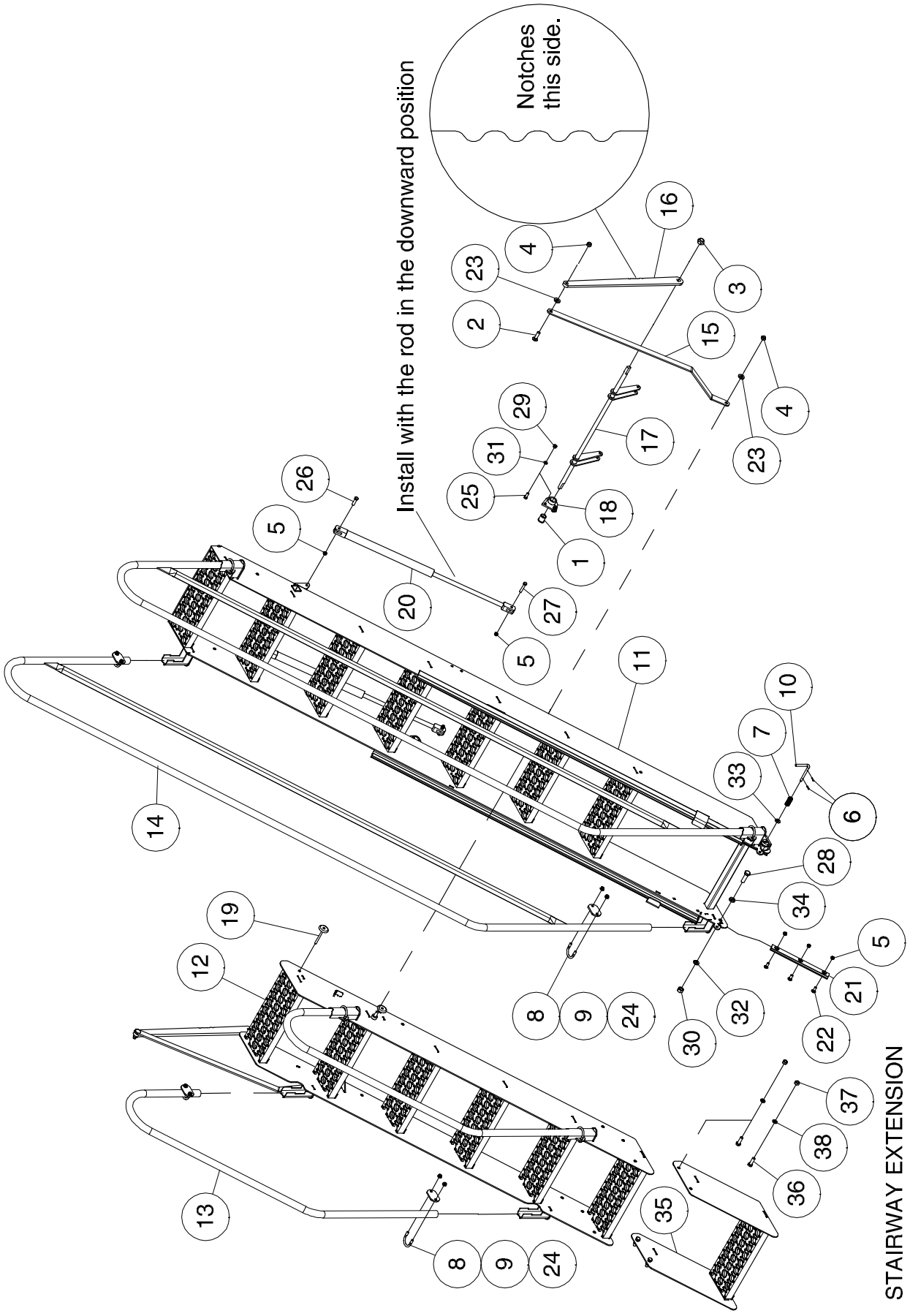
Notches this side.
Install with the rod in the downward position
STAIRWAY EXTENSION

Stairway - Prior to 2016

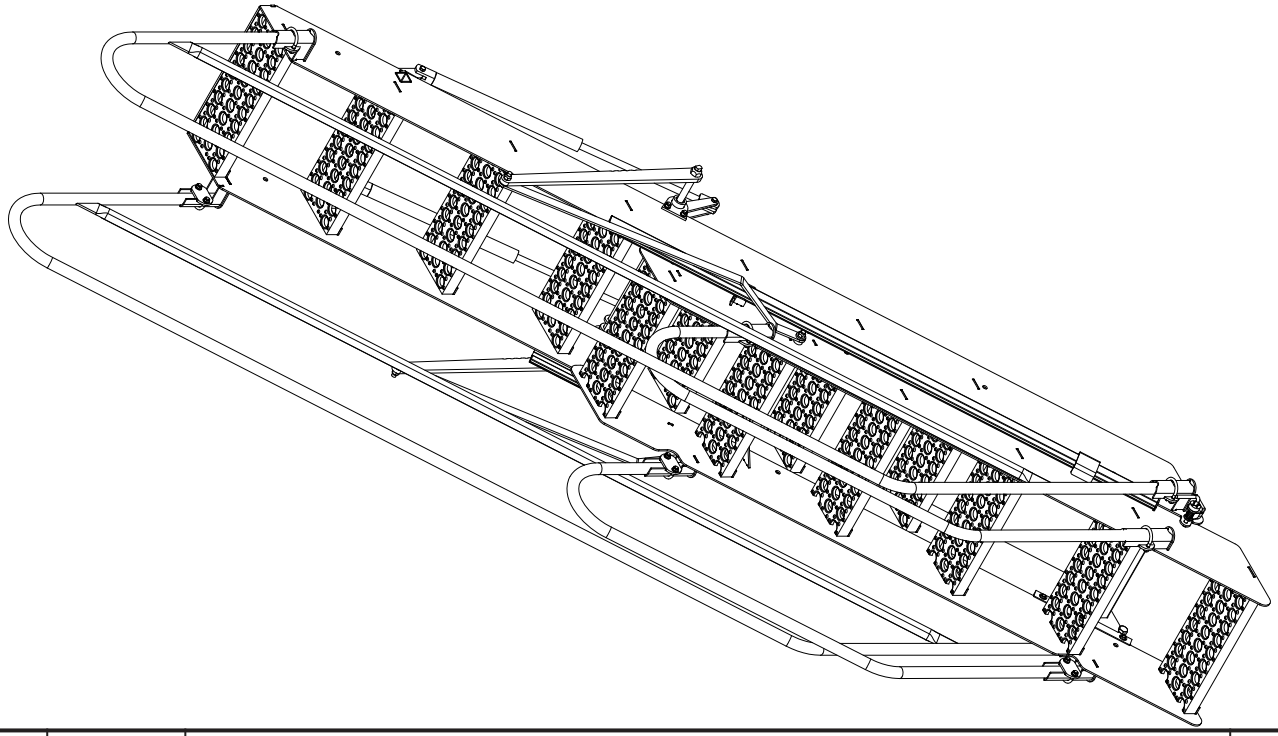

Item	Part No.	Description	Qty
1	C26525	Nylon Bushing - 0.776 ID x 1.016 OD x 1 1/4 Lg	2
2	D-5267	Carriage Bolt - 1/2 x 1 3/4 Lg	2
3	D-5273	Unitorque Hex Locknut - 3/4	2
4	F-3405	Locknut - 1/2 Unitorque	4
5	M-3388	Locknut - 3/8 Unitorque	10
6	N11457	Roll Pin - 1/8 Dia x 3/4 Lg	2
7	N11847	Spring	1
8	N37619	U-Bolt - 3/8 x 2 1/8 x 2 1/16	8
9	N37621	Lug	8
10	N53333	Lock Pin	1
11	N48622	Top Stair Step	1
12	N48623	Bottom Stair Step	1
13	N48634	Handrail	2
14	N48636	Top Stair Railing	2
15	N48656	Link	2
16	N48663	Arm - Bell Crank	2
17	N48667	Bell Crank	1
18	N48670	Mounting Bracket - Bell Crank	2
19	N48688	Step Roller	4
20	N50545	Gas Spring	2
21	N51549	Plastic Guide	2
22	P7C616	Carriage Bolt - 3/8 x 1 Lg	6
23	W-539	Flatwasher - 17/32 ID x 1 3/8 OD	4
24	S27987	Flange Lock Nut - 3/8 W/Center Lock	16
25	W-475	Hex Bolt - 3/8 x 1 Lg	6
26	W-477	Hex Bolt - 3/8 x 1 1/2 Lg	2
27	W-478	Hex Bolt - 3/8 x 2 Lg	2
28	W-499	Hex Bolt - 5/8 x 2 Lg	2
29	W-514	Hex Nut - 3/8	6
30	W-517	Hex Nut - 5/8	2
31	W-523	Lockwasher - 3/8	6
32	W-526	Lockwasher - 5/8	2
33	W-538	Washer - 7/16 ID x 1 OD x 14 Ga	1
34	W-793	Washer - .64 ID x 1 1/8 OD x 3/16	2
35	N51860	Step Extension - 9800	1
36	W-486	Hex Bolt - 1/2 x 1 1/2 Lg	4
37	W-516	Hex Nut - 1/2	4
38	W-525	Lockwasher - 1/2	4

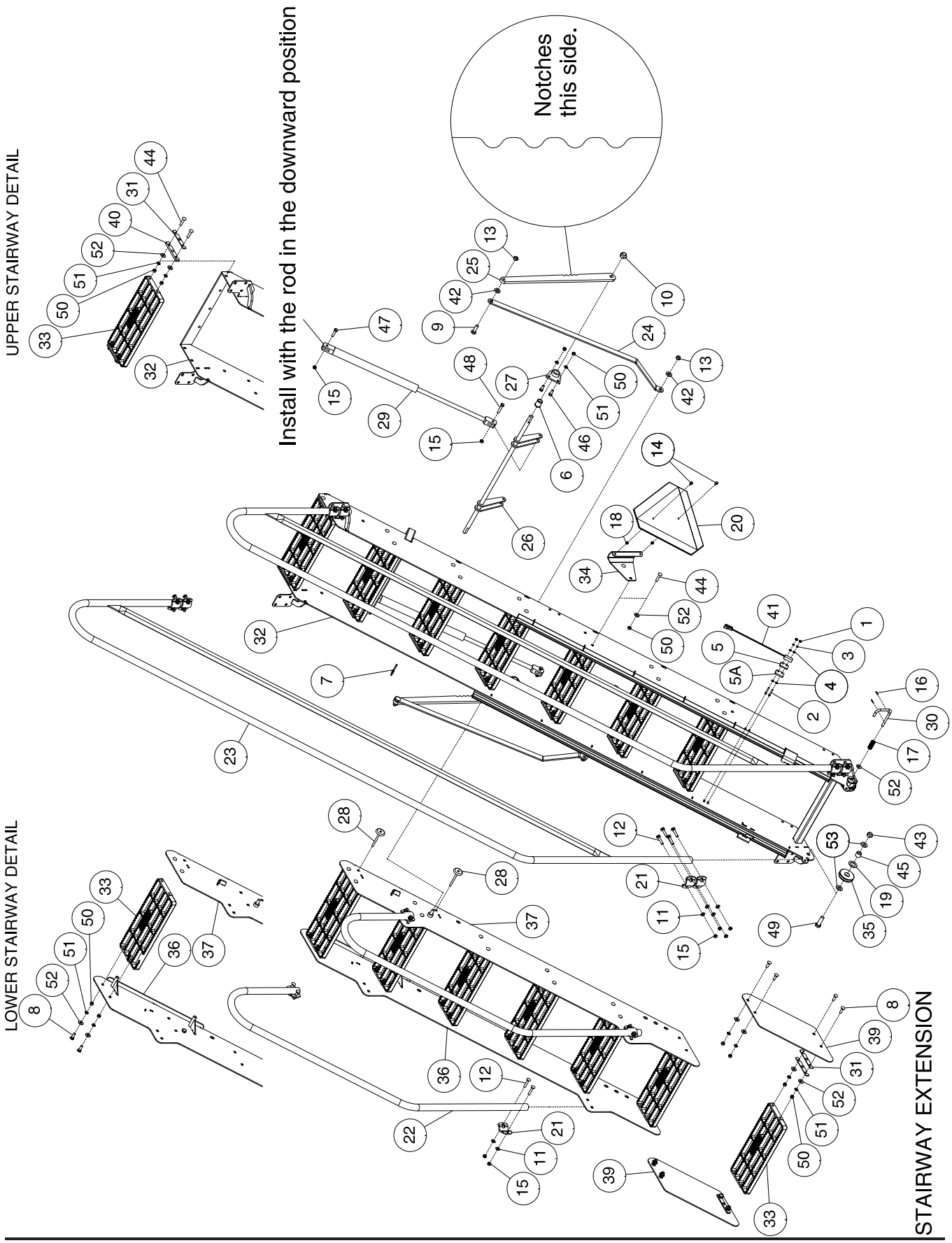
UPPER STAIRWAY DETAIL
LOWER STAIRWAY DETAIL
STAIRWAY EXTENSION
Install with the rod in the downward position
Notches this side.

Stairway - Fixed Handrails - 2016 to 2018

Item	Part No.	Description	Qty
1	11570	Hex Nut - #12 Brass	2
2	N59974	Machine Scriew - #12-24 x 1 1/2 Lg Brass	2
3	11572	Lockwasher - 0.216 ID Brass	2
4	11573	Flat Washer - 0.25 ID x 0.562 OD x 0.031 Brass	4
5	N62091	Plastic Spacer - 0.2 Thick	1
5A	N62092	Plastic Spacer - 0.3 Thick	1
6	C26525	Nylon Bushing - 0.776 ID x 1.016 OD x 1 1/4 Lg	2
7	D-4951	Tie Strap - 7 1/2 Lg	1
8	D-5260	Carriage Bolt - 3/8 x 1-1/4 Lg	28
9	D-5267	Carriage Bolt - 1/2 x 1-3/4 Lg	2
10	D-5273	Locknut - 3/4 Unitorque	2
11	D-5489	Washer - 13/32 ID x 13/16 OD x 16 Ga	24
12	D12821	Carriage Bolt - 3/8 x 2 Lg	24
13	F-3405	Locknut - 1/2 Unitorque	4
14	K-3830	Hex Bolt - 1/4 x 1/2 Lg	2
15	M-3388	Locknut - 3/8 Unitorque	28
16	N11457	Roll Pin - 1/8 Dia x 3/4 Lg	2
17	N11847	Spring	1
18	N22778	Locknut - 1/4 Nylon Insert	2
19	N31040	Washer - 1 1/32 ID x 1 3/4 OD x 16 Ga	2
20	N34475	Slow Moving Vehicle Emblem	1
21	N37622	U-Clamp Plate	12
22	N48634	Handrail - Lower Stairway	2
23	N48636	Handrail - Upper Stairway	2
24	N48656	Link	2
25	N48663	Arm - Bell Crank	2
26	N48667	Bell Crank	1
27	N48670	Mounting Bracket - Bell Crank	2
28	N48688	Roller - 1 7/8 Dia	4
29	N50545	Gas Spring	2
30	N53333	Lock Pin - 3/8 Dia	1
31	N55168	Plate Spacer - 12 Ga	18
32	N55170	Top Stair Frame only (N58539 is the Top Stair Assembly that includes 7 of N55179)	1
33	N55179	Step - MORRIS	14
34	N55196	Bracket - SMV	1
35	N56560	Roller	2
36	N58536	Bottom Stair Step - Left	1
37	N58537	Bottom Stair Step - Right	1
38	N69050	Stairway Assembly	1
39	N58789	Step Side Runner (1 step extension) - 9800 (800/65R32 and 800/70R38 tires)	2
	N58788	Step Side Runner (2 step extension) - 9800 (850/85R38 tires) 91000 (800/70R38 tires)	2
	N58790	Step Side Runner (3 step extension) - 91000 (850/85R38 tires)	2
40	N58937	Plate Spacer - 3/8	14
41	N59885	Sensor - Ferrous Proximity	1
42	S-751	Washer - 17/32 ID x 1 1/8 OD x 0.188 Thick	4
43	S-1197	Locknut - 5/8 Unitorque	2
44	S31980	Carriage Bolt - 3/8 x 1 3/4 Lg	28
45	S47395	Spacer Bushing - 0.627 ID x 1 OD x 3/4 Lg	2
46	W-475	Hex Bolt - 3/8 x 1 Lg	4
47	W-477	Hex Bolt - 3/8 x 1 1/2 Lg	2
48	W-478	Hex Bolt - 3/8 x 2 Lg	2
49	W-499	Hex Bolt - 5/8 x 2 Lg	2
50	W-514	Hex Nut - 3/8	60
51	W-523	Lockwasher - 3/8	60
52	W-538	Washer - 7/16 ID x 1 OD x 14 Ga	57
53	W-629	Washer- 21/32 ID x 1 5/16 OD x 13 Ga	4

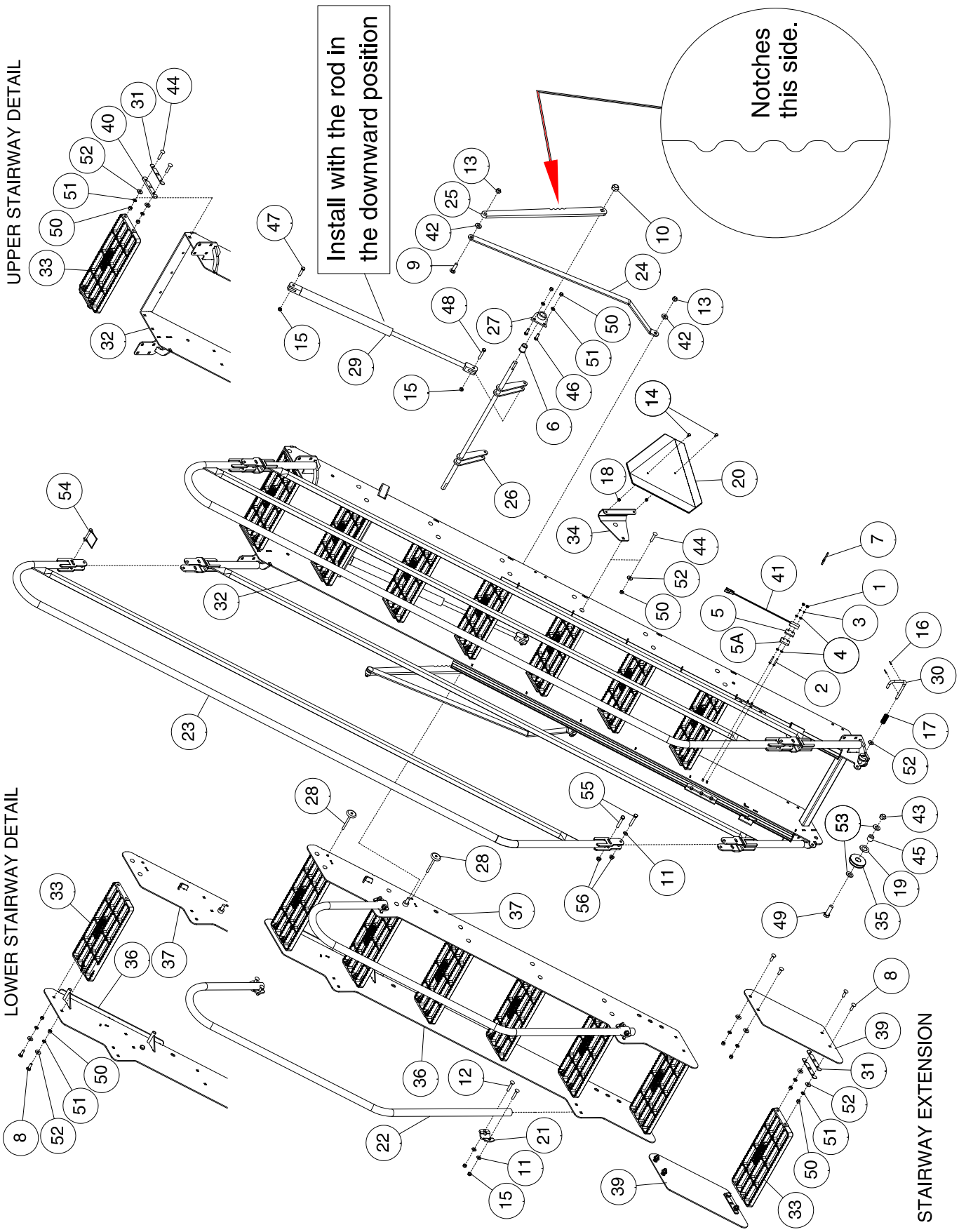
UPPER STAIRWAY DETAIL
Install with the rod in the downward position
Notches this side.
LOWER STAIRWAY DETAIL
STAIRWAY EXTENSION

Stairway - Folding Handrails - 2018 to Present

Item	Part No.	Description	Qty
1	11570	Hex Nut - #12 Brass	2
2	N59974	Machine Scriew - #12-24 x 1 1/2 Lg Brass	2
3	11572	Lockwasher - 0.216 ID Brass	2
4	11573	Flat Washer - 0.25 ID x 0.562 OD x 0.031 Brass	4
5	N62091	Plastic Spacer - 0.2 Thick	1
5A	N62092	Plastic Spacer - 0.3 Thick	1
6	C26525	Nylon Bushing - 0.776 ID x 1.016 OD x 1 1/4 Lg	2
7	D-4951	Tie Strap - 7 1/2 Lg	1
8	D-5260	Carriage Bolt - 3/8 x 1-1/4 Lg	28
9	D-5267	Carriage Bolt - 1/2 x 1-3/4 Lg	2
10	D-5273	Locknut - 3/4 Unitorque	2
11	D-5489	Washer - 13/32 ID x 13/16 OD x 16 Ga	10
12	S31980	Carriage Bolt - 3/8 x 1 3/4 Lg	8
13	F-3405	Locknut - 1/2 Unitorque	4
14	K-3830	Hex Bolt - 1/4 x 1/2 Lg	2
15	M-3388	Locknut - 3/8 Unitorque	12
16	N11457	Roll Pin - 1/8 Dia x 3/4 Lg	2
17	N11847	Spring	1
18	N22778	Locknut - 1/4 Nylon Insert	2
19	N31040	Washer - 1 1/32 ID x 1 3/4 OD x 16 Ga	2
20	N34475	Slow Moving Vehicle Emblem	1
21	N37622	U-Clamp Plate	4
22	N48634	Handrail - Lower Stairway	2
23	N64871	Handrail - Upper Stairway	2
24	N48656	Link	2
25	N48663	Arm - Bell Crank	2
26	N48667	Bell Crank	1
27	N48670	Mounting Bracket - Bell Crank	2
28	N48688	Roller - 1 7/8 Dia	4
29	N50545	Gas Spring	2
30	N53333	Lock Pin - 3/8 Dia	1
31	N55168	Plate Spacer - 12 Ga	18
32	N64870	Top Stair Frame only	1
33	N55179	Step - MORRIS	14
34	N55196	Bracket - SMV	1
35	N56560	Roller	2
36	N58536	Bottom Stair Step - Left	1
37	N58537	Bottom Stair Step - Right	1
38	N58540	Stairway Assembly	1
39	N58789	Step Side Runner (1 step extension) - 9800 (800/65R32 and 800/70R38 tires)	2
	N58788	Step Side Runner (2 step extension) - 9800 (850/85R38 tires) 91000 (800/70R38 tires)	2
	N58790	Step Side Runner (3 step extension) - 91000 (850/85R38 tires)	2
40	N58937	Plate Spacer - 3/8	14
41	N59885	Sensor - Ferrous Proximity	1
42	S-751	Washer - 17/32 ID x 1 1/8 OD x 0.188 Thick	4
43	S-1197	Locknut - 5/8 Unitorque	2
44	S31980	Carriage Bolt - 3/8 x 1 3/4 Lg	28
45	S47395	Spacer Bushing - 0.627 ID x 1 OD x 3/4 Lg	2
46	W-475	Hex Bolt - 3/8 x 1 Lg	4
47	W-477	Hex Bolt - 3/8 x 1 1/2 Lg	2
48	W-478	Hex Bolt - 3/8 x 2 Lg	2
49	W-499	Hex Bolt - 5/8 x 2 Lg	2
50	W-514	Hex Nut - 3/8	60
51	W-523	Lockwasher - 3/8	60
52	W-538	Washer - 7/16 ID x 1 OD x 14 Ga	57
53	W-629	Washer- 21/32 ID x 1 5/16 OD x 13 Ga	4
54	C13447	Pin-Quick - 5/16 Dia 2 3/8 UL	2
55	W-480	Bolt - 3/8 x 2 1/2 Lg	4
56	S27987	Locknut - 3/8 w/ Flanged Center Lock	4

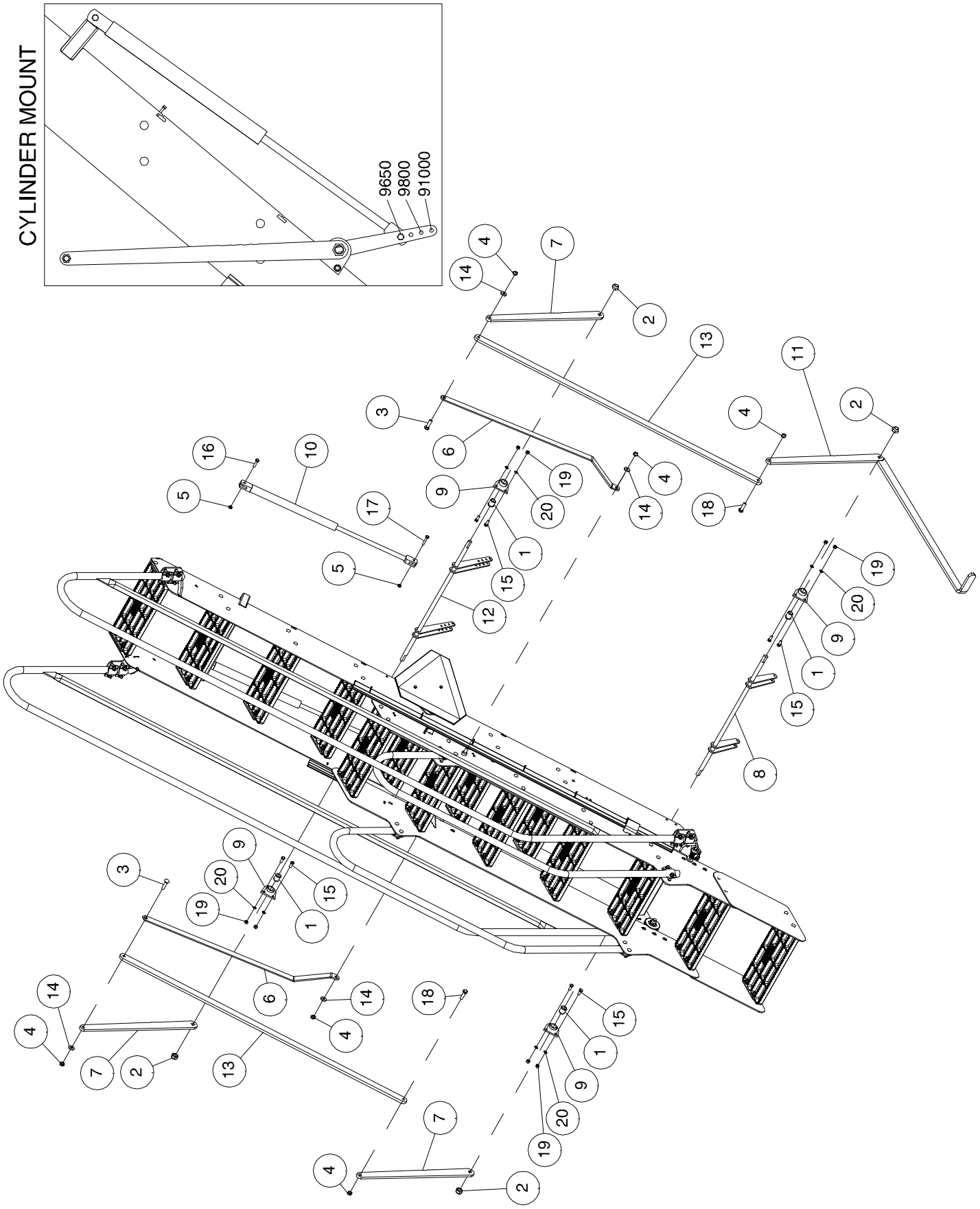
CYLINDER MOUNT
9650
9800
91000

Stairway - Stair Assist - 2016 to Present

Item	Part No.	Description	Qty
1	C26525	Nylon Bushing - 0.776 ID x 1.016 OD x 1 1/4 Lg	4
2	D-5273	Locknut - 3/4 Unitorque	4
3	D12820	Carriage Bolt - 1/2 x 2 Lg	2
4	F-3405	Locknut - 1/2 Unitorque	6
5	M-3388	Locknut - 3/8 Unitorque	4
6	N48656	Link	2
7	N48663	Arm - Bell Crank	3
8	N48667	Bell Crank	1
9	N48670	Mounting Bracket - Bell Crank	4
10	N50545	Gas Spring	2
11	N55506	Handle - Stair Assist	1
12	N55509	Bell Crank - Stair Assist	1
13	N58534	Arm - Link	2
14	S-751	Washer - 17/32 ID x 1.125 OD x .188	4
15	W-475	Hex Bolt - 3/8 x 1 Lg	8
16	W-477	Hex Bolt - 3/8 x 1 1/2 Lg	2
17	W-478	Hex Bolt - 3/8 x 2 Lg	2
18	W-487	Hex Bolt - 1/2 x 1 3/4 Lg	2
19	W-514	Hex Nut - 3/8	8
20	W-523	Lockwasher - 3/8	8

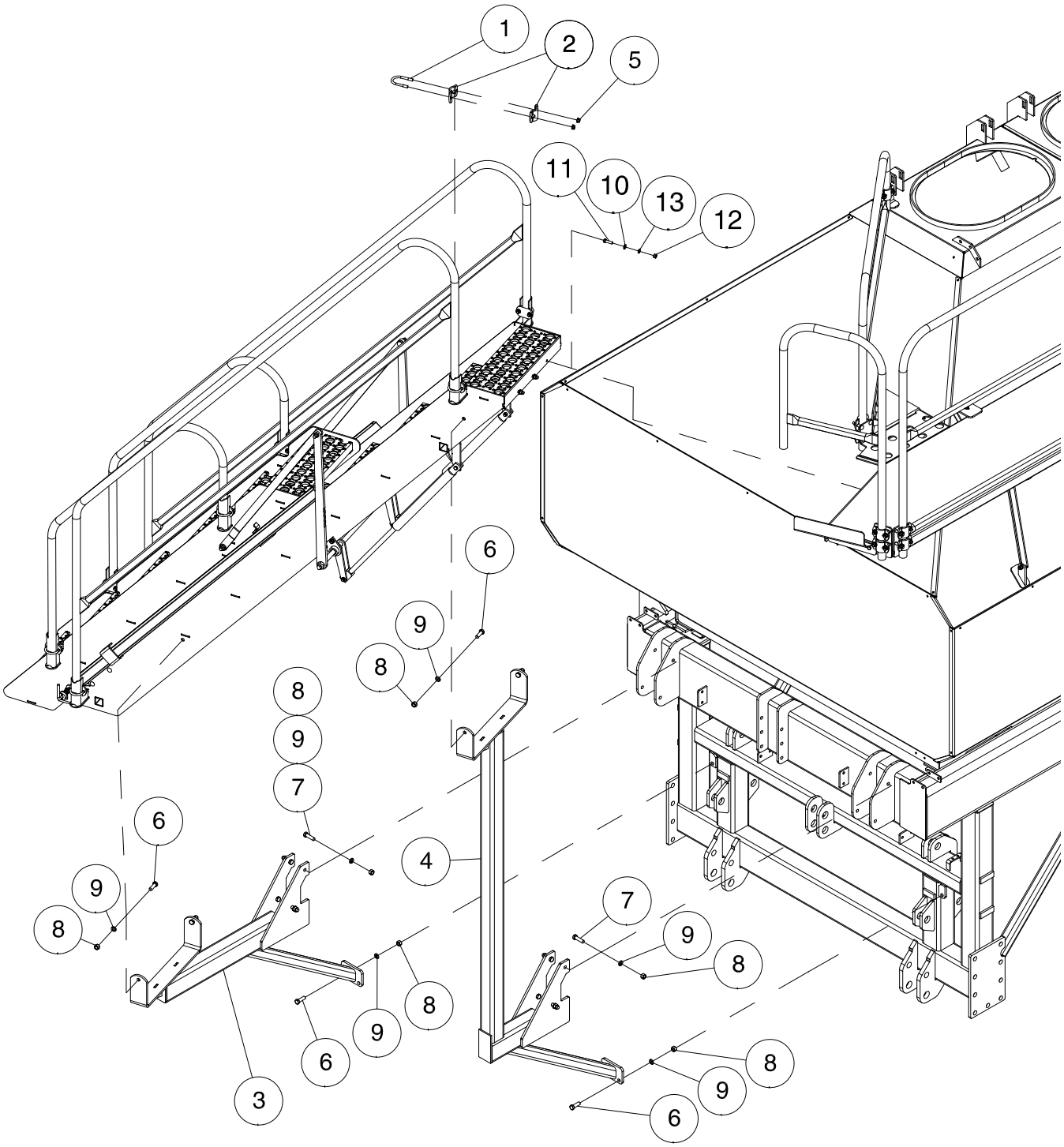
1
2
5
11
10
13
12
6
9
8
8
9
7
6
9
8
4
7
9
8
8
9
6
3
8
9
6

Stairway - Small Frame Stairway

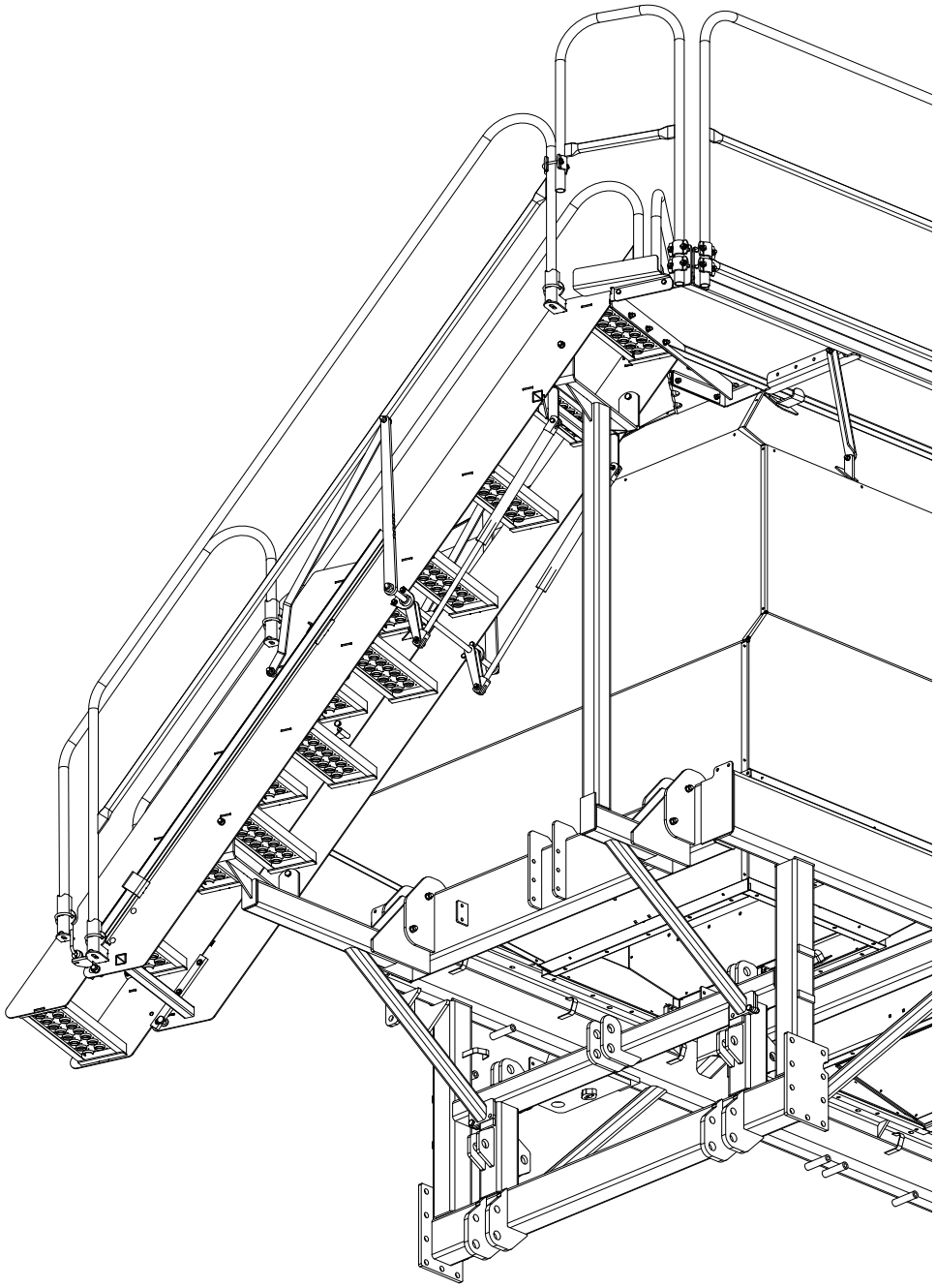

Item	Part No.	Description	Qty
1	N37620	U-Bolt - 3/8 x 2 1/8 x 3 UL	1
2	N37622	U-Clamp Plate	2
3	N48644	Ladder Mounting - Left	1
4	N48645	Ladder Mounting - Right	1
5	S27987	Lock Nut - 3/8 W/ Flange Center Lock	4
6	W-486	Hex Bolt - 1/2 x 1 1/2 Lg - 3/4 Lg Thread	6
7	W-487	Hex Head Capscrew - 3/4 Lg Thread	8
8	W-516	Hex Nut - 1/2	14
9	W-525	Lockwasher - 1/2	14
10	D-5489	Washer - 13/32 ID x 13/16 OD	3
11	W-187	Hex Bolt - 3/8 X 1 1/4 LG	3
12	W-514	Hex Nut - 3/8	3
13	W-523	Lockwasher - 3/8	3

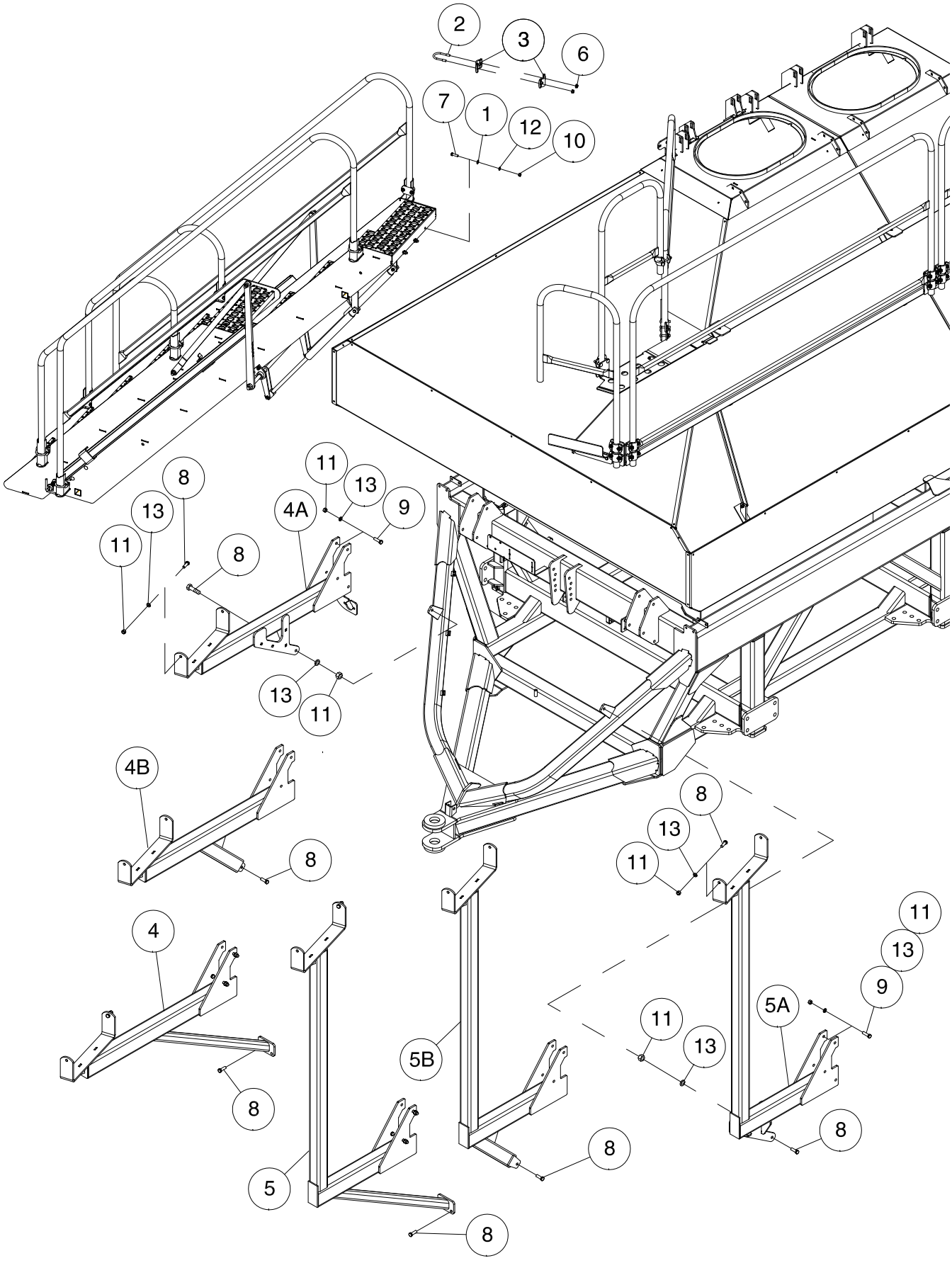
2
3
6
7
1
12
10
11
13
8
13
4A
9
11
8
13
11
4B
8
8
13
11
11
13
9
4
5A
11
13
5B
8
8
5
8

Stairway - Large Frame Stairway

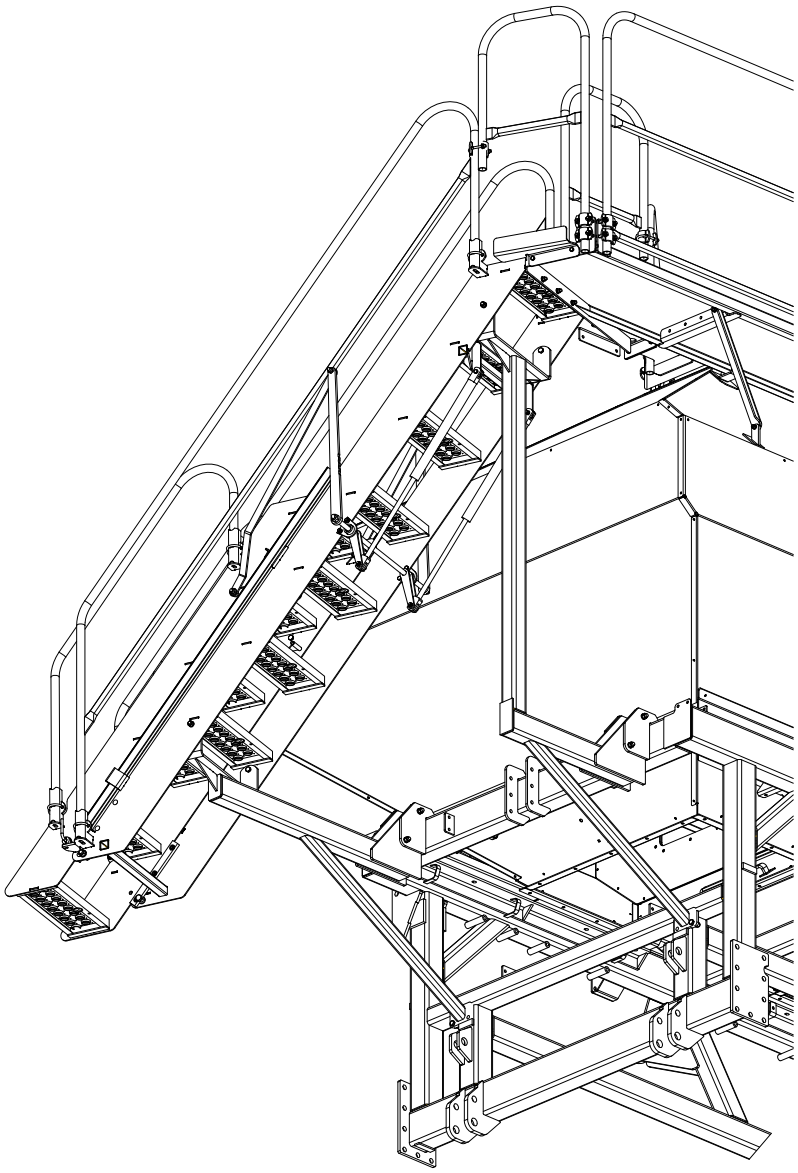

Item	Part No.	Description	Qty
1	D-5489	Washer - 13/32 ID x 13/16 OD x 16 Ga	3
2	N37620	U-Bolt - 3/8 x 2 1/8 x 3 UL	1
3	N37622	U-Clamp Plate	2
4	N50535	Ladder Mounting Left - 9445, 9550, 9650 - Prior to 2016	1
4A	**N55135**	**Ladder Mounting Left - 9445, 9550, 9650 - 2016 to Present**	**1**
4B	N51895	Ladder Mounting Left - 9800	1
	N55515	Ladder Mounting Left - 91000	1
5	N50540	Ladder Mounting Right - 9445, 9550, 9650 - Prior to 2016	1
5A	**N55136**	**Ladder Mounting Right - 9445, 9550, 9650 - 2016 to Present**	**1**
5B	N51896	Ladder Mounting Right - 9800	1
	N55516	Ladder Mounting Right - 91000	1
6	S27987	Flange Lock Nut - 3/8 W/Center Lock	2
7	W-187	Hex Bolt - 3/8 x 1 1/4 Lg	3
8	W-486	Hex Bolt - 1/2 x 1 1/2 Lg - 3/4 Lg Thread	6
9	W-487	Hex Head Capscrew - 3/4 Lg Thread	12
10	W-514	Hex Nut - 3/8	3
11	W-516	Hex Nut - 1/2	18
12	W-523	Lockwasher - 3/8	3
13	W-525	Lockwasher - 1/2	18

Notes

Section 2:
Walkway - Handrails Fixed

Section Contents

9365 Walkway 2-2
9450 Walkway 2-4
9535 Walkway 2-6
9365 Handrails 2-8
9450 Handrails 2-10
9535 Handrails 2-12
9445 Walkway 2-14
9550 Walkway 2-16
9650 Walkway 2-18
9445 Handrails 2-20
9550 Handrails 2-22
9650 Handrails 2-24
9555 Walkway 2-26
9680 Walkway 2-28
9800 and 91000 Walkway 2-30
9555 Handrails 2-32
9680 Handrails 2-34
9800 and 91000 Handrails 2-36

Walkway - Handrails Fixed
9365 Walkway

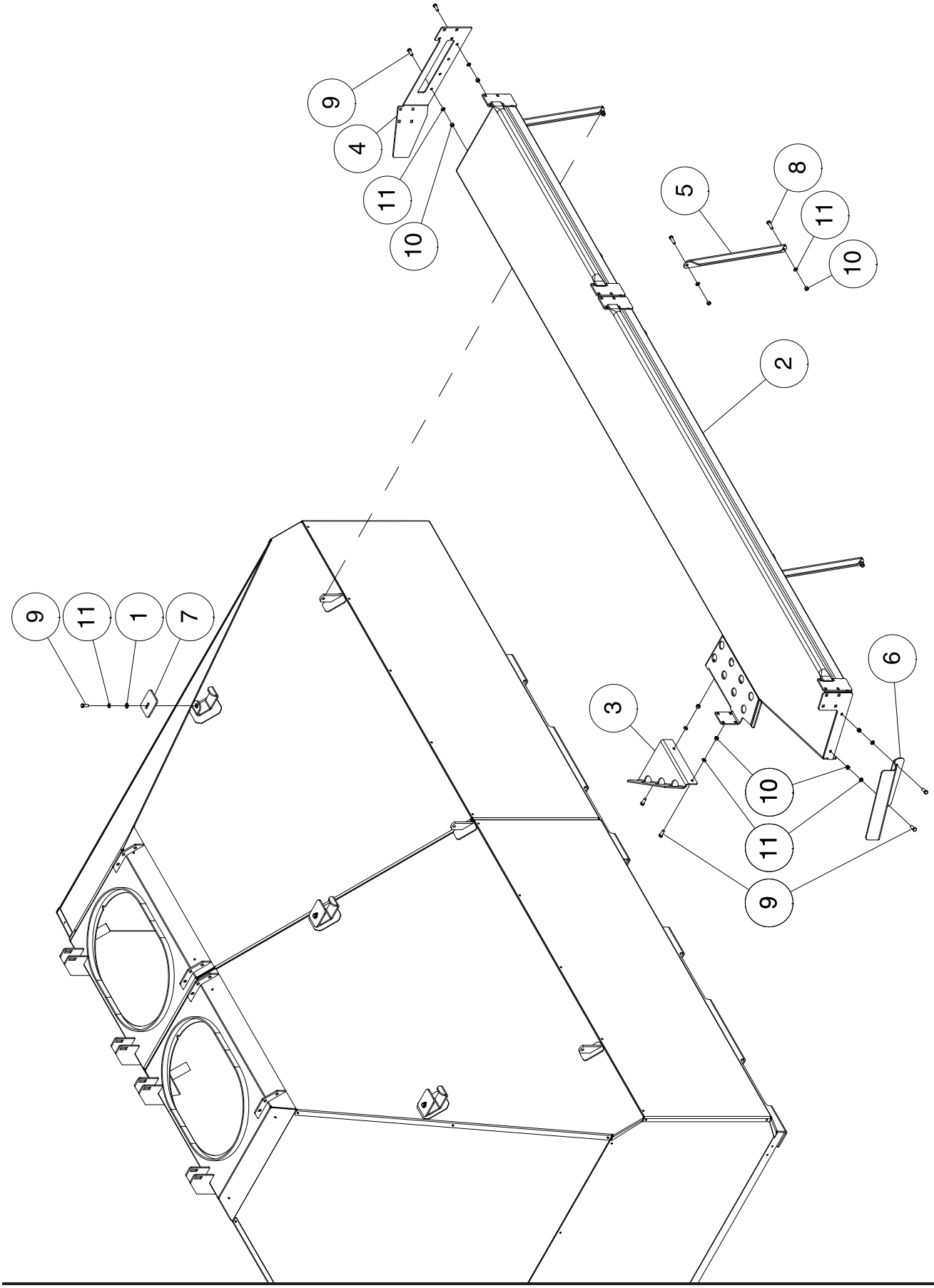

Walkway - Handrails Fixed - 9365 Walkway

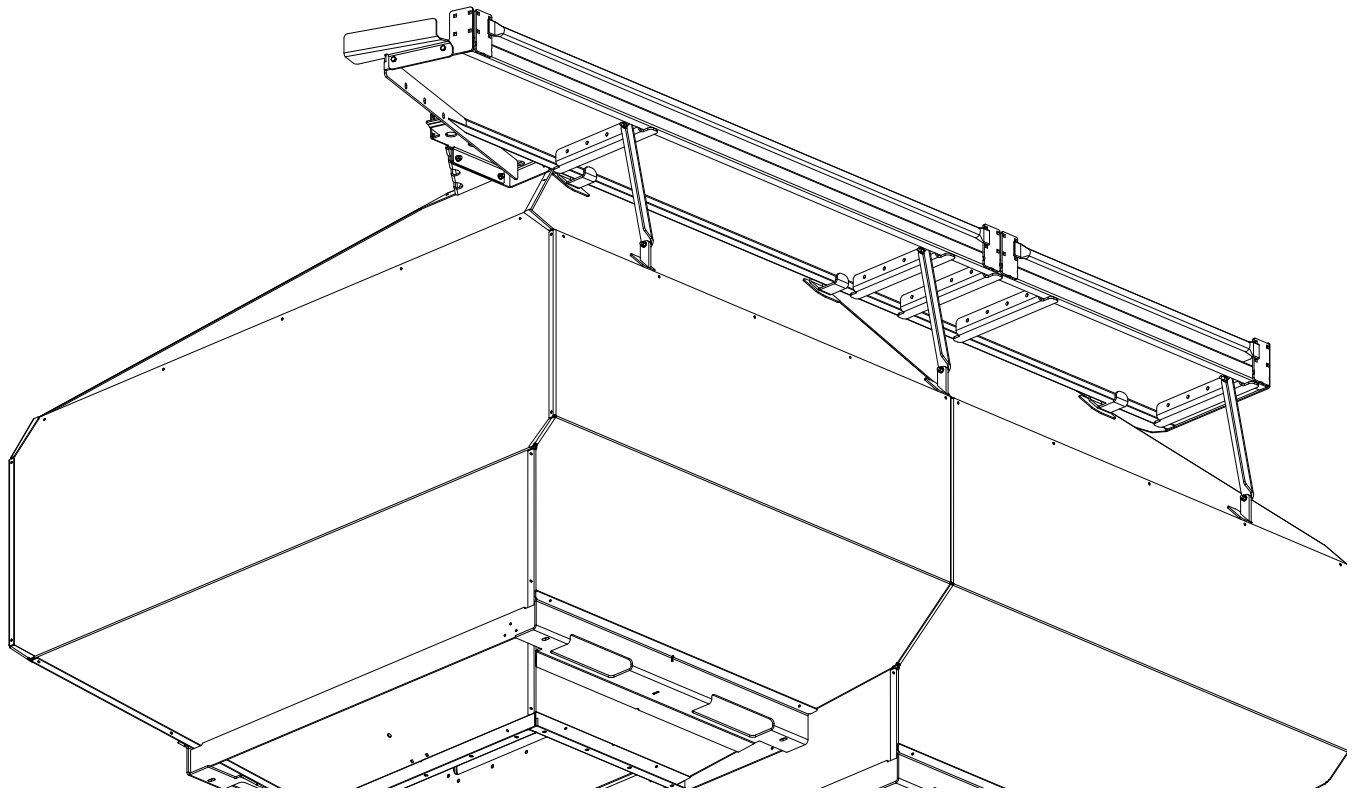

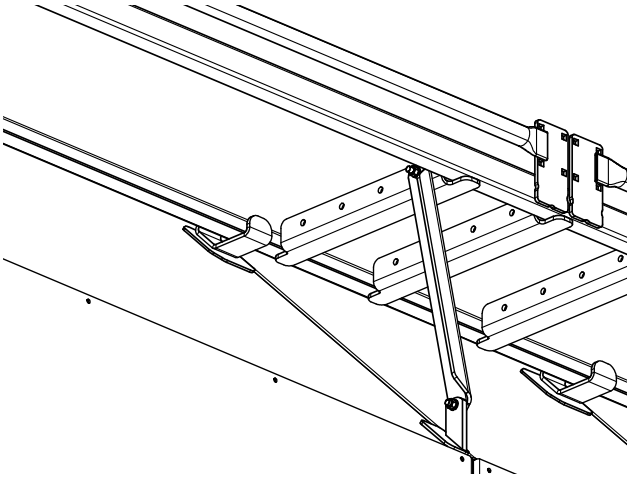

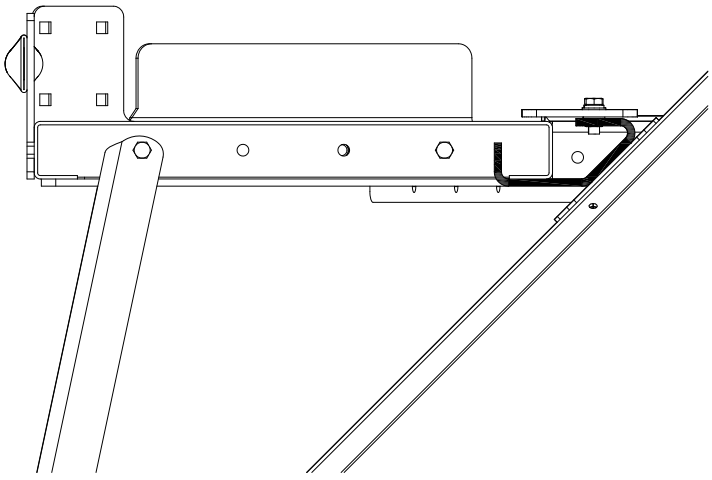

Item	Part No.	Description	Qty
1	D-5489	Washer - 13/32 ID x 13/16 OD x 16 Ga	3
2	N49230	Main Walkway Section - 144 3/8 Lg with 8 hole plate	1
3	N50655	Panel - Extension	1
4	N50729	End Plate	1
5	N50866	Support Bracket	3
6	N51118	Kick Plate	1
7	N51238	Plate - Clamp	3
8	W-187	Hex Bolt - 3/8 x 1 1/4 Lg.	6
9	W-475	Hex Bolt - 3/8 x 1 Lg.	9
10	W-514	Hex Nut - 3/8	12
11	W-523	Lockwasher - 3/8	15

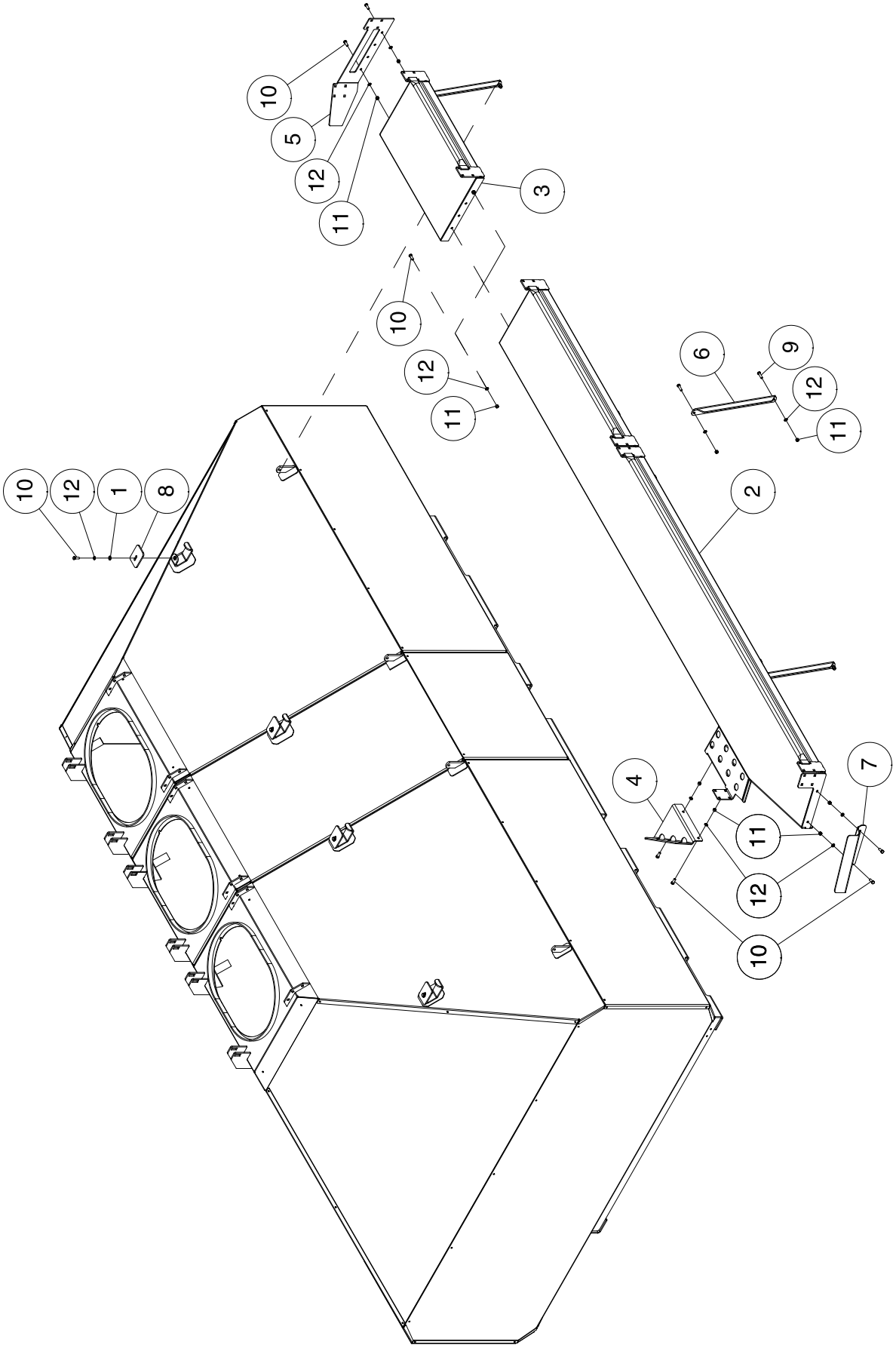
10
5
12
11
3
10
12
11
6
9
12
11
10
12
1
8
2
4
7
11
12
10

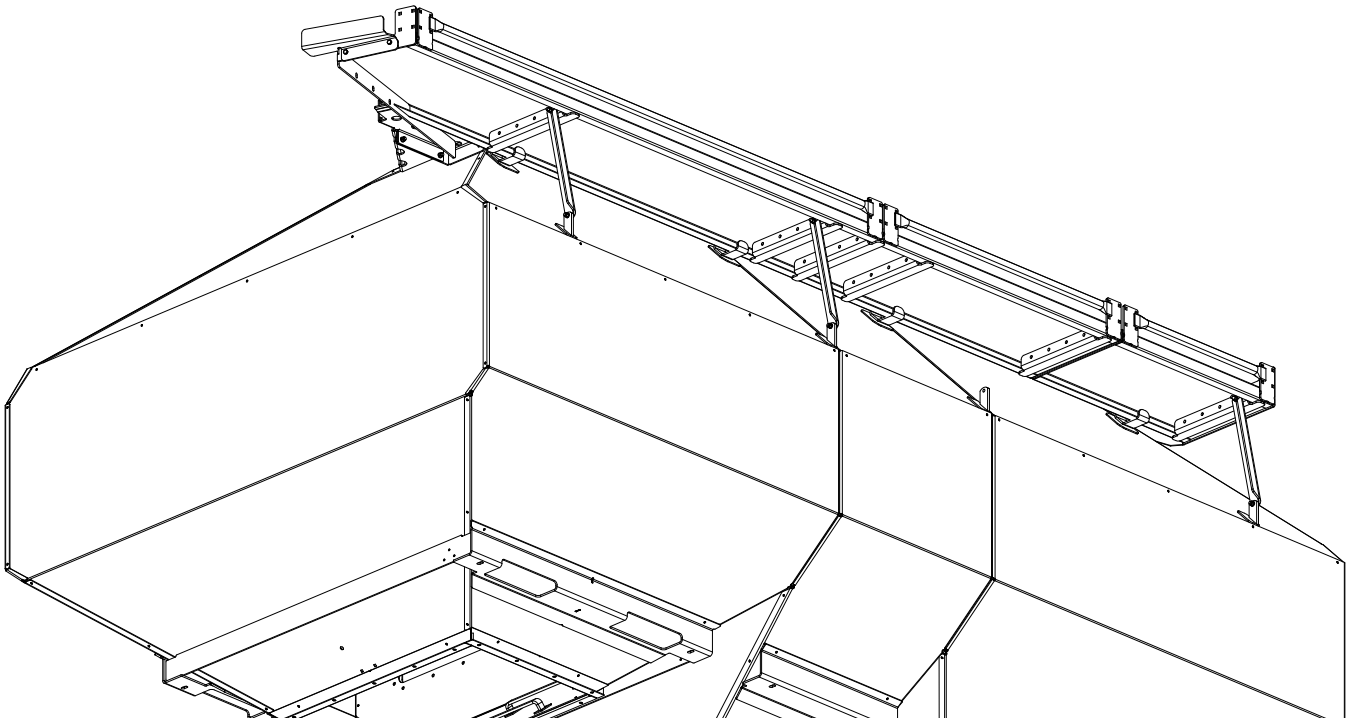

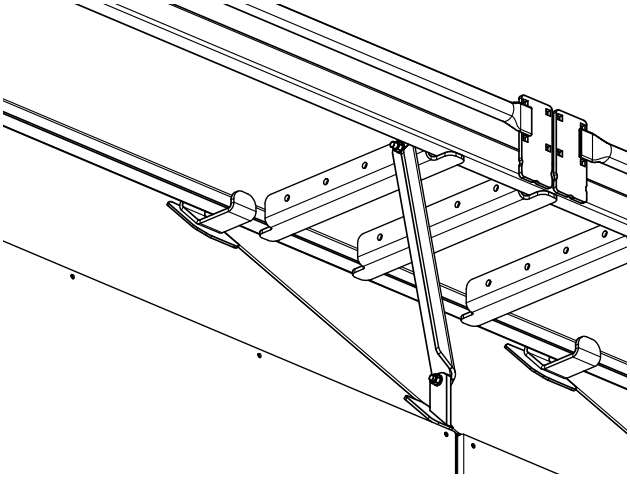

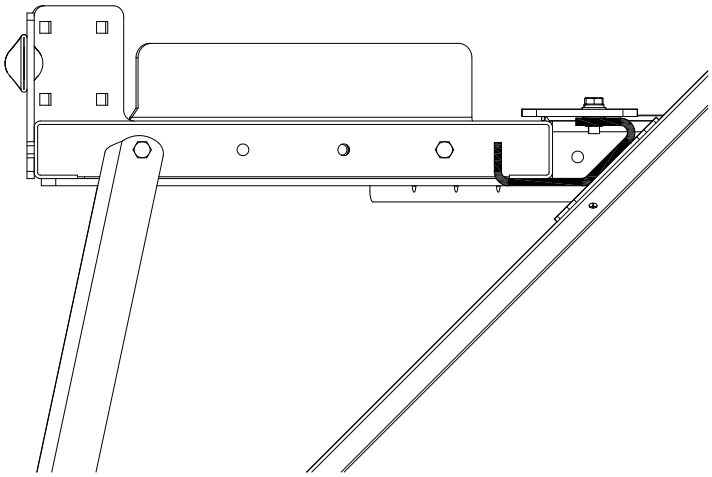

Item	Part No.	Description	Qty
1	D-5489	Washer - 13/32 ID x 13/16 OD x 16 Ga	4
2	N49230	Main Walkway Section - 144 3/8 Lg with 8 hole plate	1
3	N49678	Walkway Section - 30 3/8 Lg	1
4	N50655	Panel - Extension	1
5	N50729	End Plate	1
6	N50866	Support Bracket	3
7	N51118	Kick Plate	1
8	N51238	Plate - Clamp	4
9	W-187	Hex Bolt - 3/8 x 1 1/4 Lg	6
10	W-475	Hex Bolt - 3/8 x 1 Lg	12
11	W-514	Hex Nut - 3/8	14
12	W-523	Lockwasher - 3/8	18

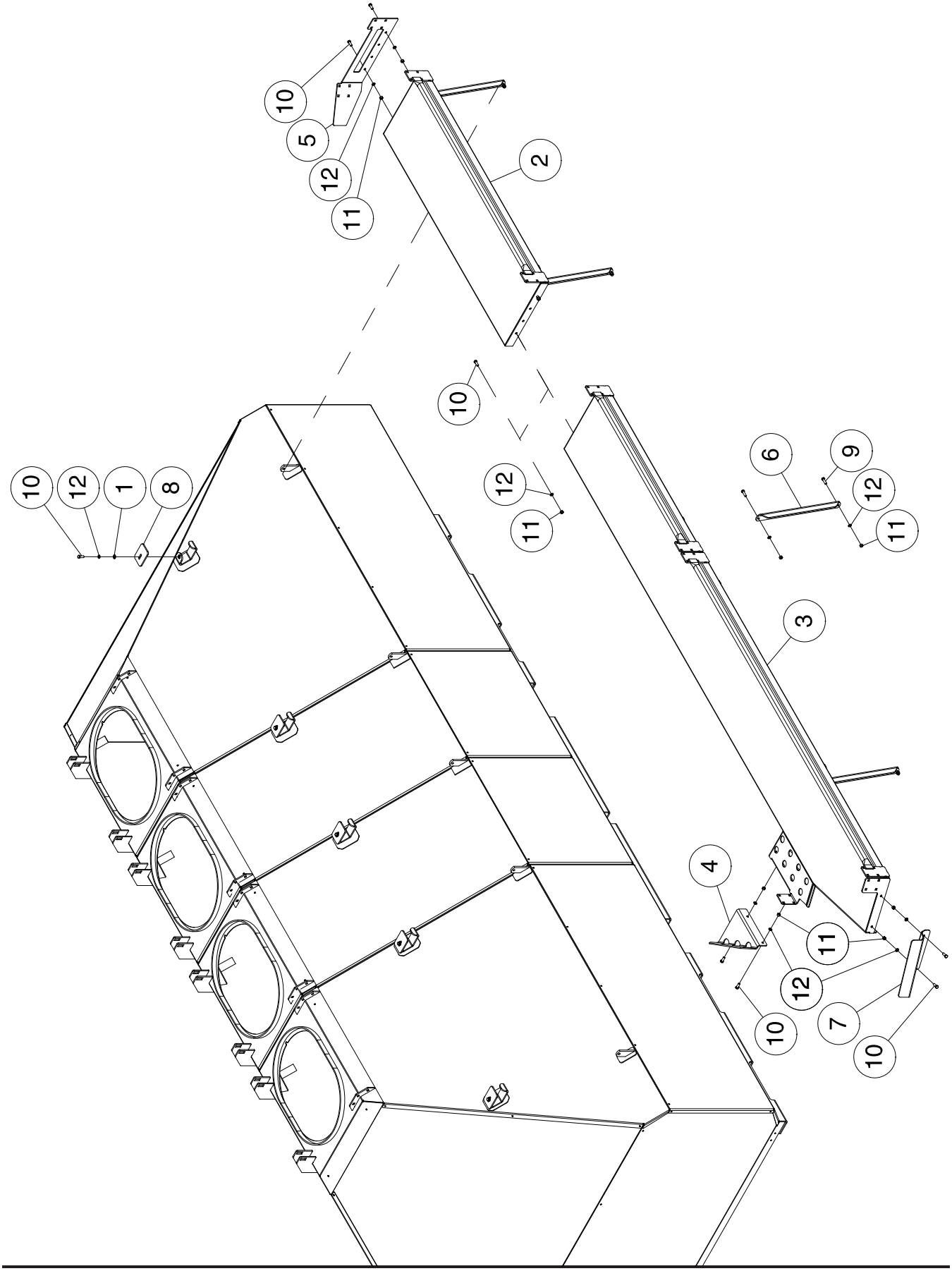
10
5
12
11
2
10
12
11
6
9
12
11
10
12
1
8
3
4
11
12
10
7
10

Tanks & Handrails -9535 Walkway

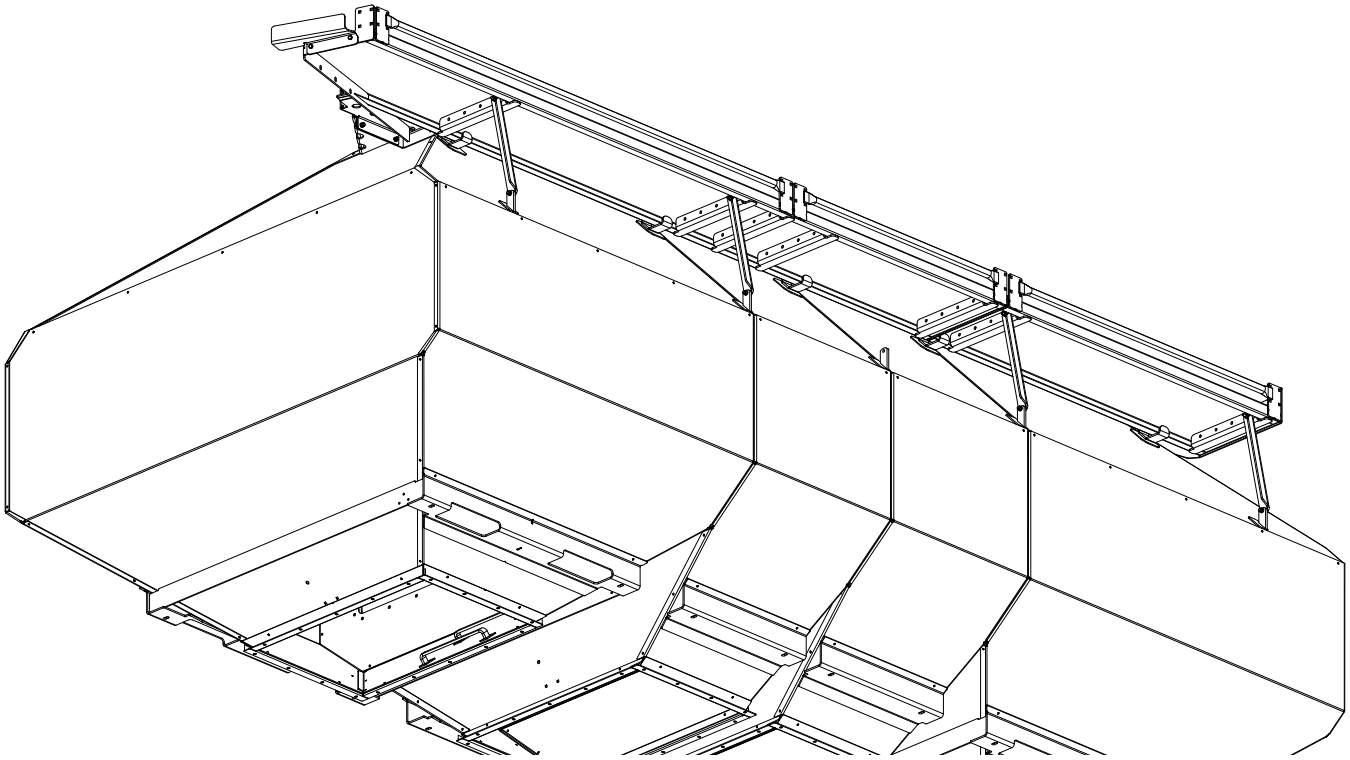

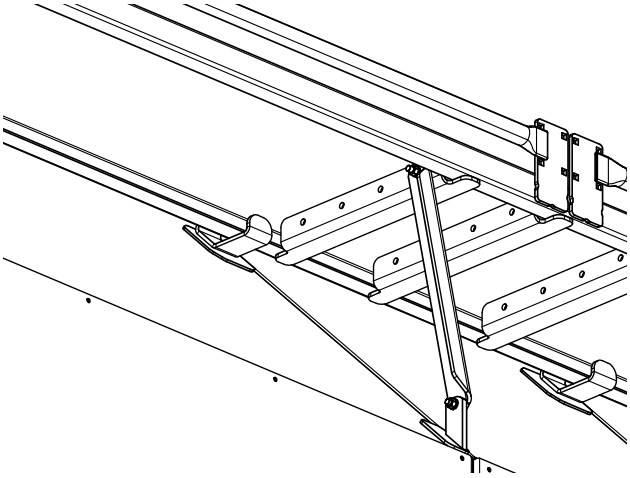

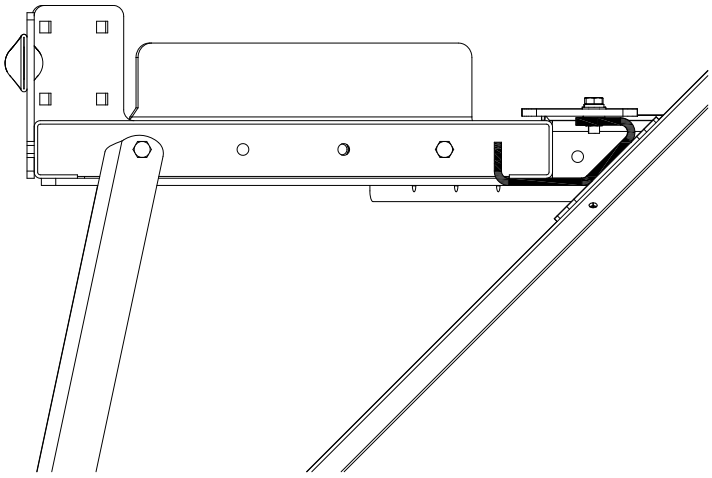

Item	Part No.	Description	Qty
1	D-5489	Washer - 13/32 ID x 13/16 OD x 16 Ga	5
2	N49225	Walkway Section - 60 11/16 Lg	1
3	N49230	Main Walkway Section - 144 3/8 Lg with 8 hole plate	1
4	N50655	Panel - Extension	1
5	N50729	End Plate	1
6	N50866	Support Bracket	4
7	N51118	Kick Plate	1
8	N51238	Plate - Clamp	5
9	W-187	Hex Bolt - 3/8 x 1 1/4 Lg.	8
10	W-475	Hex Bolt - 3/8 x 1 Lg.	13
11	W-514	Hex Nut - 3/8	16
12	W-523	Lockwasher - 3/8	21

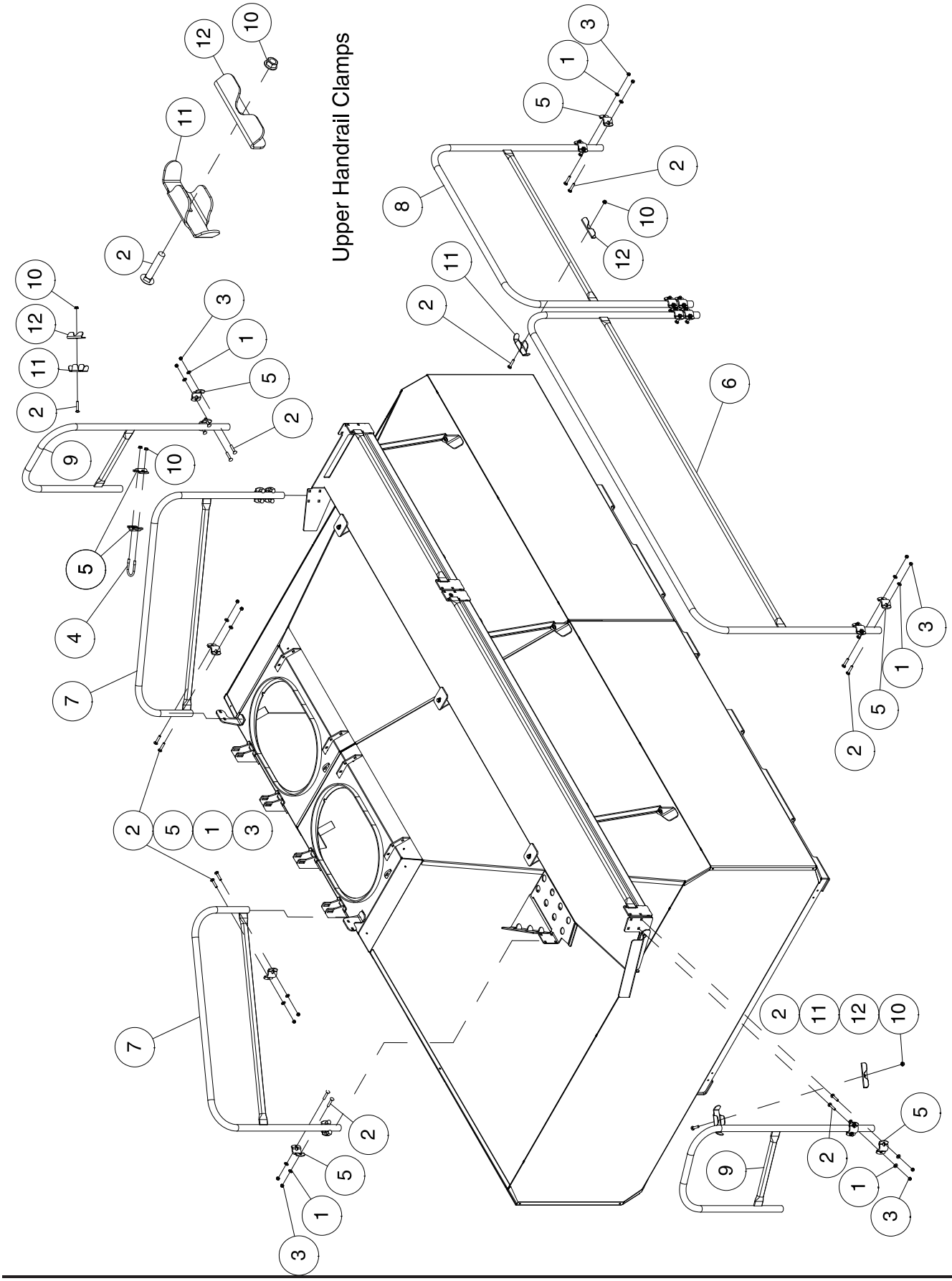
Upper Handrail Clamps

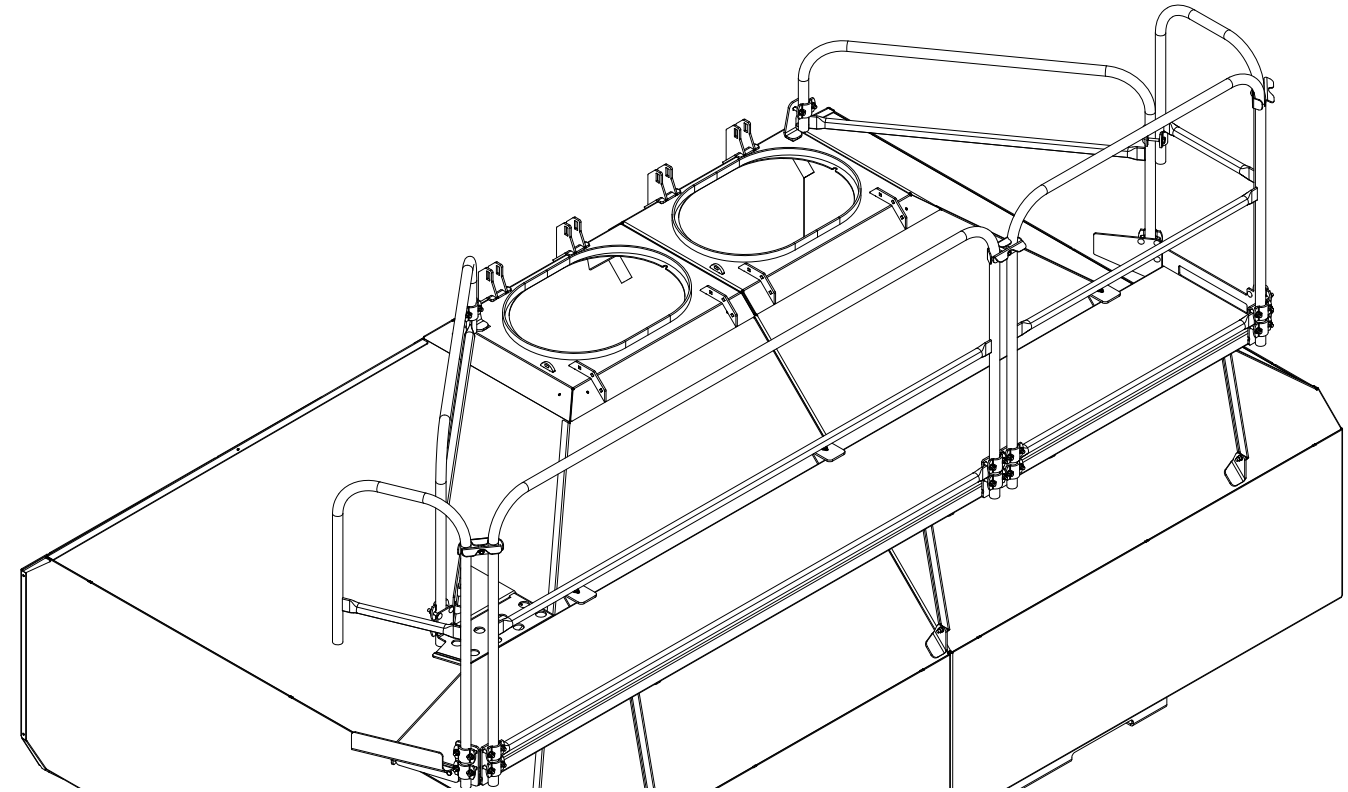

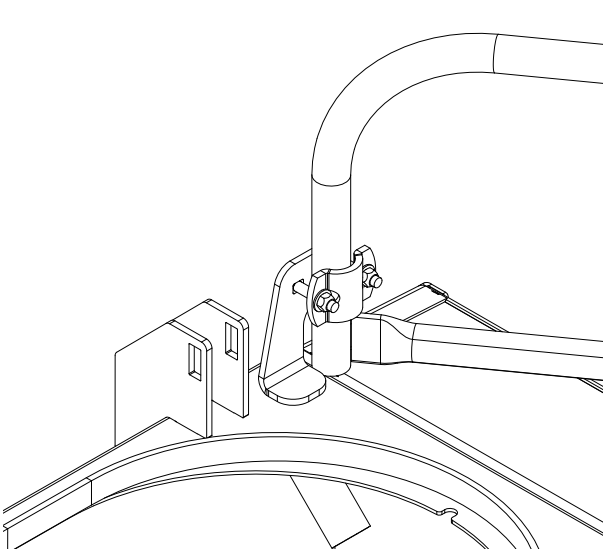

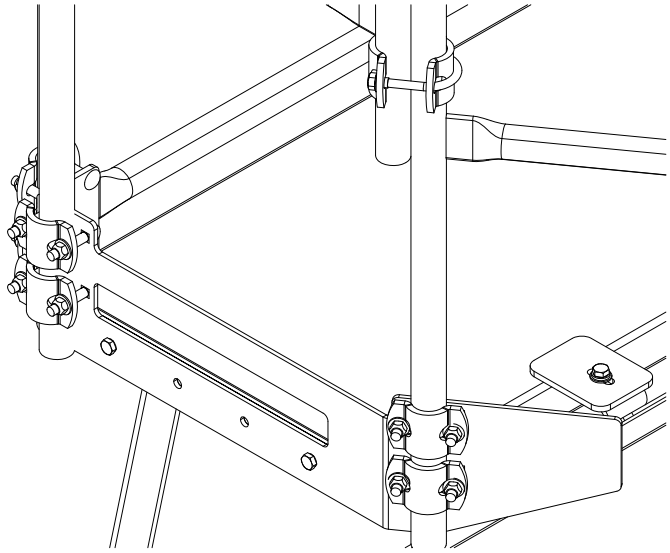

Item	Part No.	Description	Qty
1	D-5489	Washer - 13/32 ID x 13/16 OD x 16 Ga	43
2	D12821	Carriage Bolt - 3/8 x 2 Lg	39
3	M-3388	Locknut - 3/8 Unitorque	36
4	N37620	U-Bolt - 3/8 x 2 1/8 x 3 UL	1
5	N37622	U-Clamp Plate	20
6	N49245	Handrail - 91 1/16 Lg (Overall)	1
7	N49615	Handrail - 45 13/16 Lg (Overall)	2
8	N50700	Handrail - 45 13/16 Lg (Overall)	1
9	N50945	Handrail - End - 18 15/16 Lg (Overall)	2
10	S27987	Lock Nut - 3/8 W/ Flange Center Lock	5
11	N53463	Plate Clamp - Handrail Clamp - 5 3/32 wide	3
12	N53175	Plate Clamp - Backing Plate	3

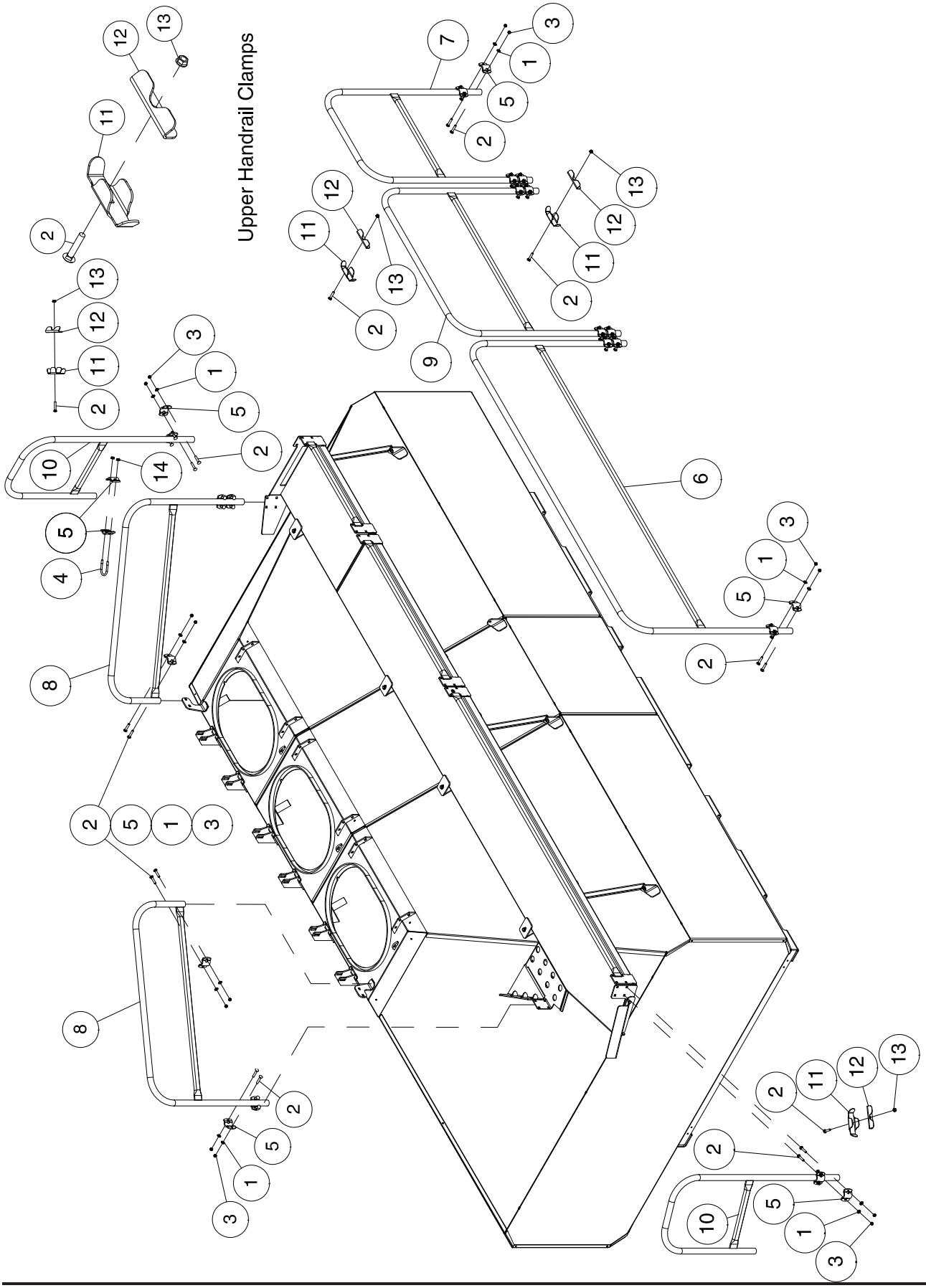
Upper Handrail Clamps

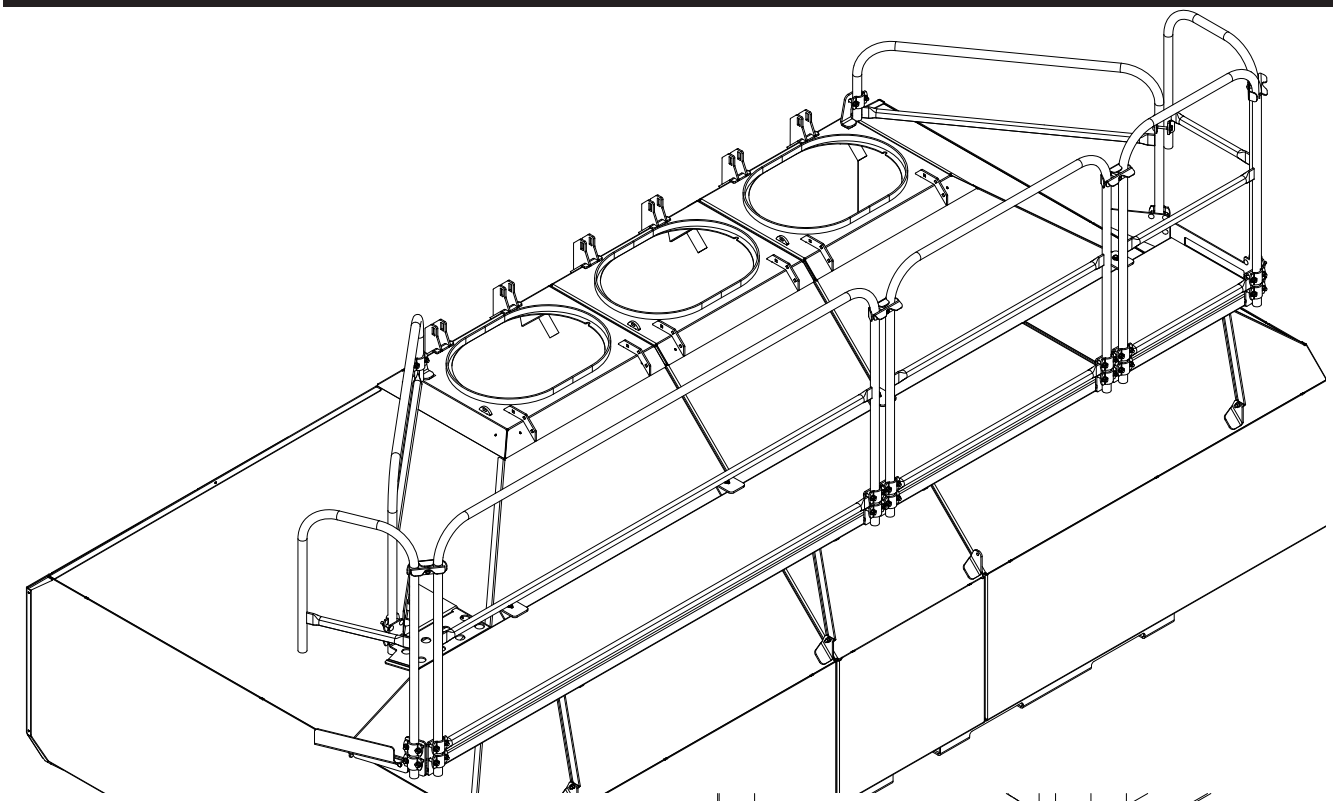

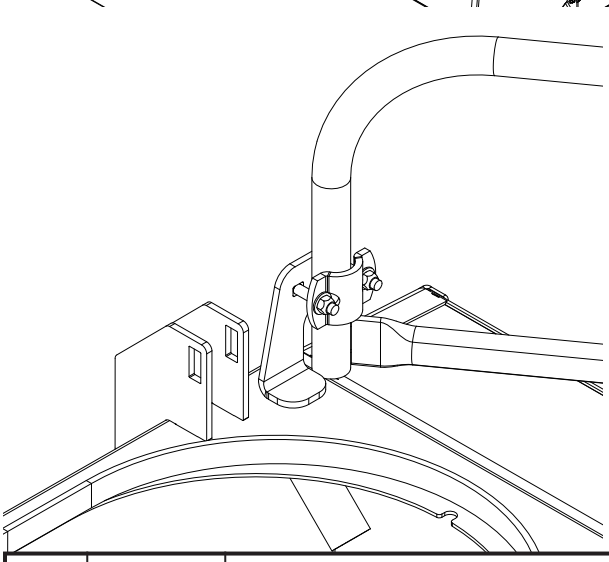

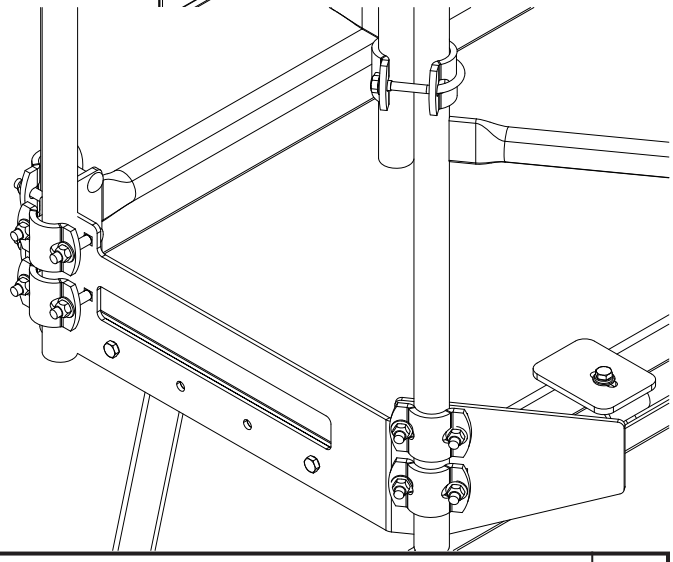

Item	Part No.	Description	Qty
1	D-5489	Washer - 13/32 ID x 13/16 OD x 16 Ga	48
2	D12821	Carriage Bolt - 3/8 x 2 Lg	48
3	M-3388	Locknut - 3/8 Unitorque	45
4	N37620	U-Bolt - 3/8 x 2 1/8 x 3 UL	1
5	N37622	U-Clamp Plate	24
6	N49245	Handrail - 91 1/16 Lg (Overall)	1
7	N49600	Handrail - 28 13/16 Lg (Overall)	1
8	N49615	Handrail - 45 13/16 Lg (Overall)	2
9	N50700	Handrail - 45 13/16 Lg (Overall)	1
10	N50945	Handrail - End - 18 15/16 Lg (Overall)	2
11	N53463	Plate Clamp - Handrail Clamp - 5 3/32 wide	4
12	N53175	Plate Clamp - Backing Plate	4
13	S27987	Lock Nut - 3/8 W/ Flange Center Lock	6

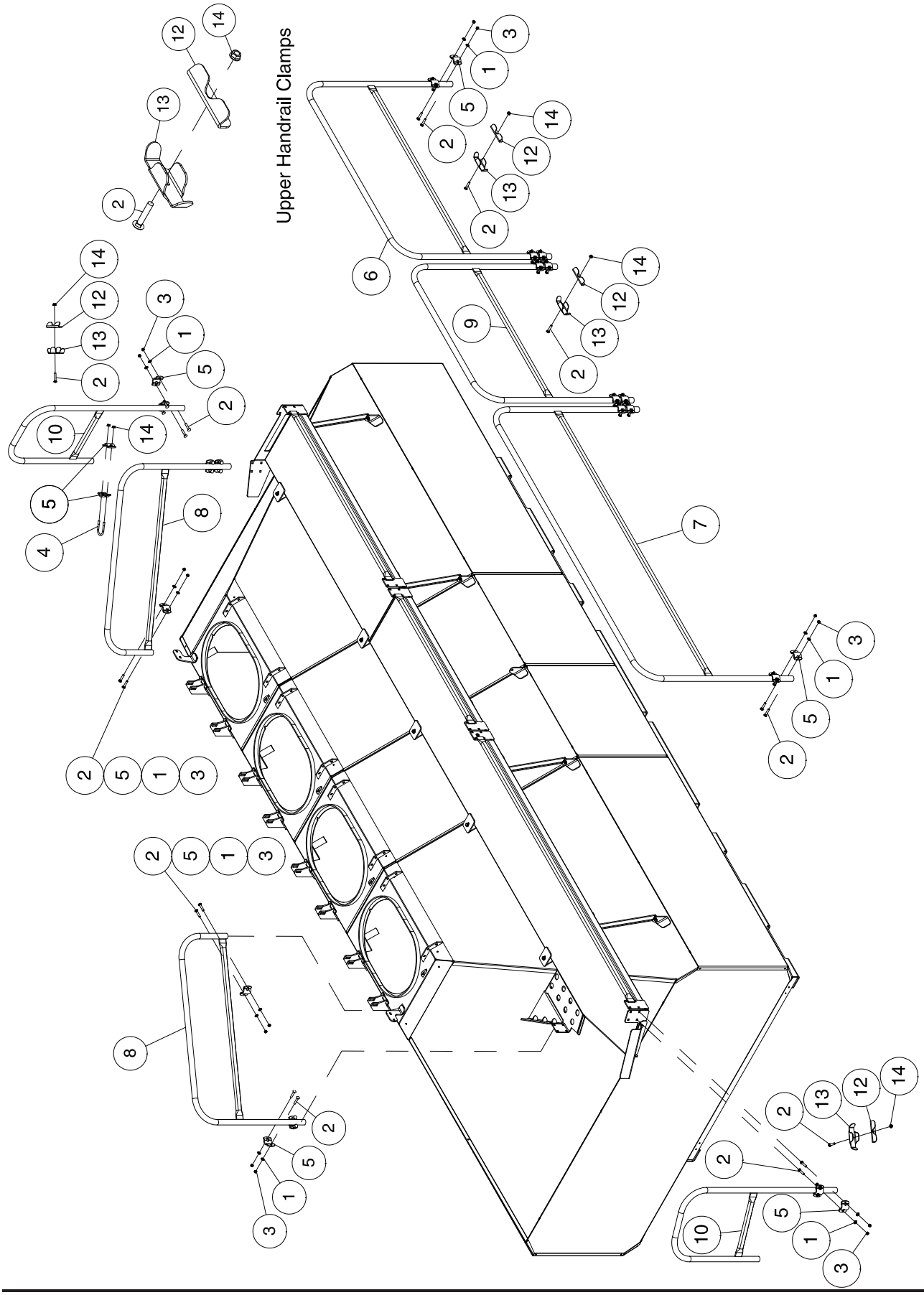
Upper Handrail Clamps

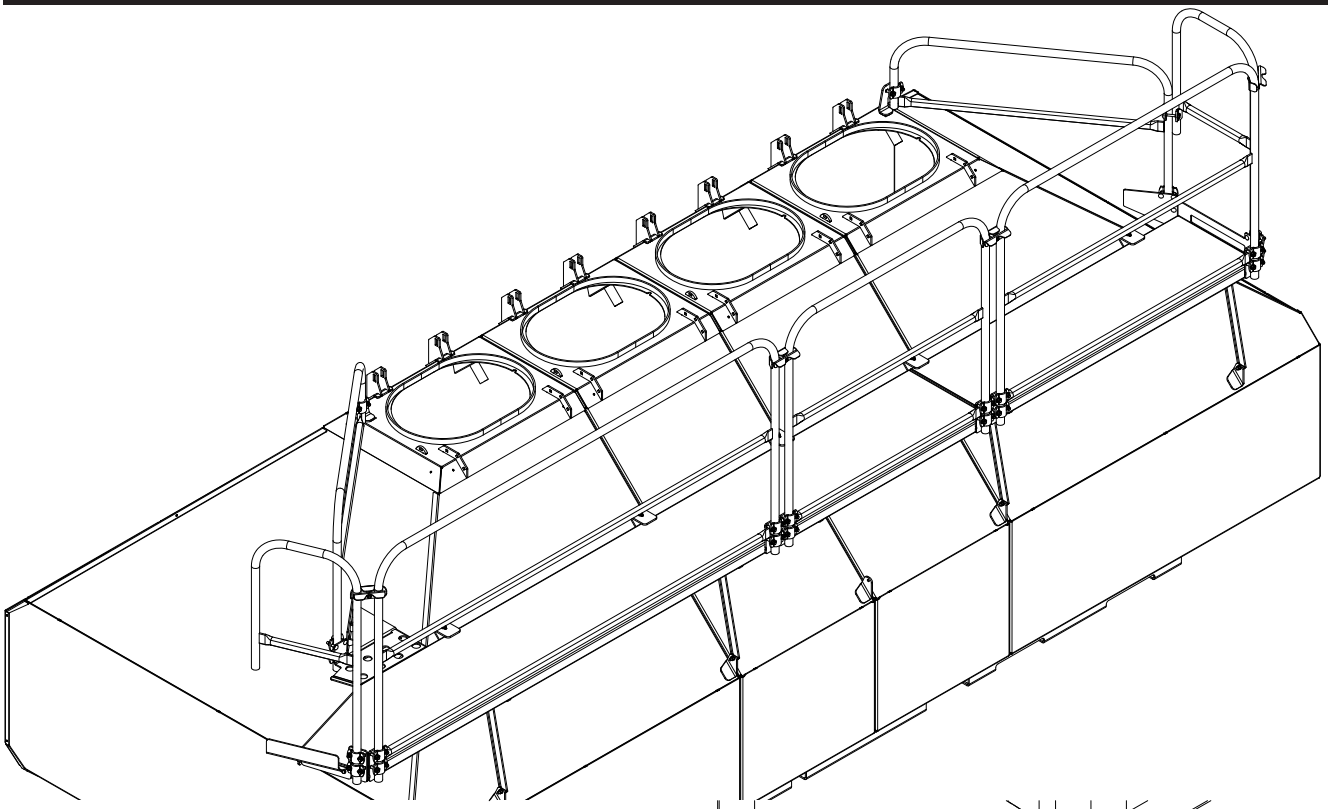

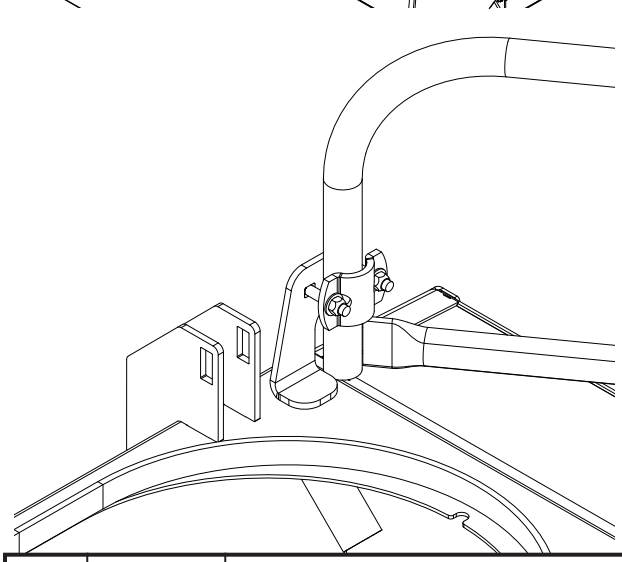

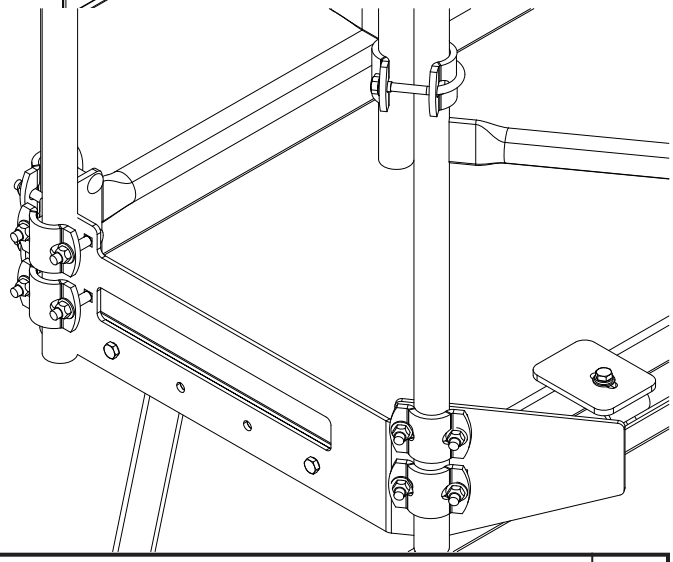

Item	Part No.	Description	Qty
1	D-5489	Washer - 13/32 ID x 13/16 OD x 16 Ga	52
2	D12821	Carriage Bolt - 3/8 x 2 Lg	48
3	M-3388	Locknut - 3/8 Unitorque	44
4	N37620	U-Bolt - 3/8 x 2 1/8 x 3 UL	1
5	N37622	U-Clamp Plate	24
6	N49200	Handrail - 58 7/8 Lg (Overall)	1
7	N49245	Handrail - 91 1/16 Lg (Overall)	1
8	N49615	Handrail - 45 13/16 Lg (Overall)	2
9	N50700	Handrail - 45 13/16 Lg (Overall)	1
10	N50945	Handrail - End - 18 15/16 Lg (Overall)	2
12	N53175	Plate Clamp - Backing Plate	4
13	N53463	Plate Clamp - Handrail Clamp - 5 3/32 wide	4
14	S27987	Hex Nut - 3/8 w/ Flanged Center Lock	6

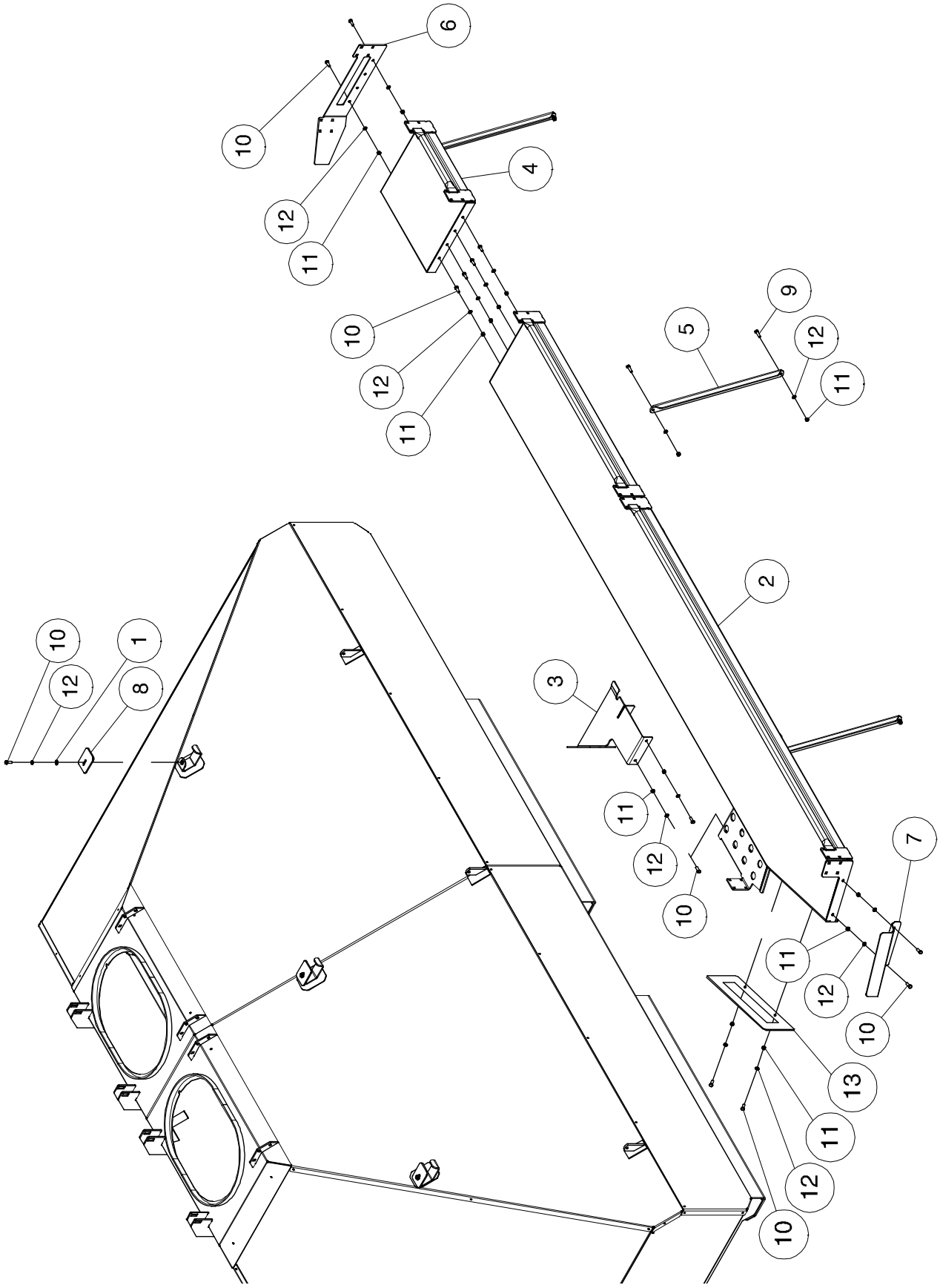
6
10
12
11
4
10
12
11
5
9
12
11
2
3
11
12
10
10
12
8
1
7
11
12
10
13
11
12
10

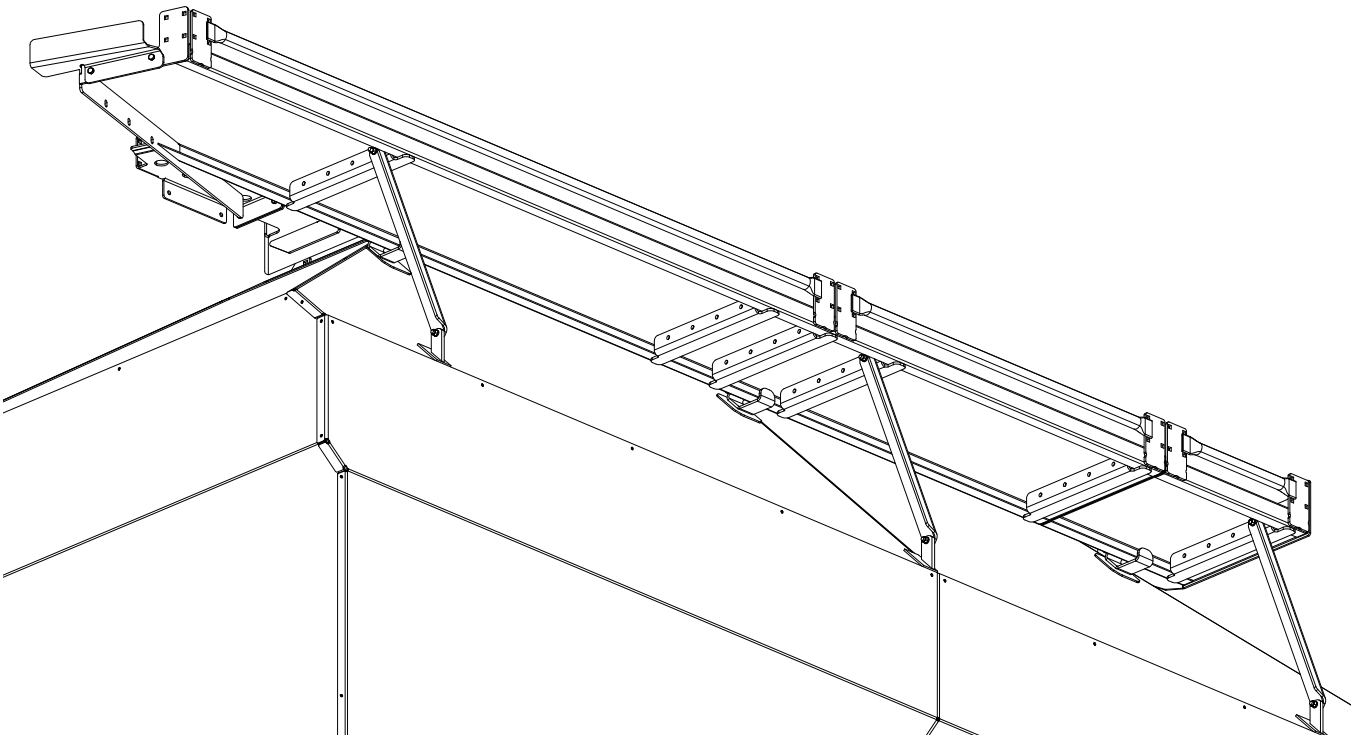

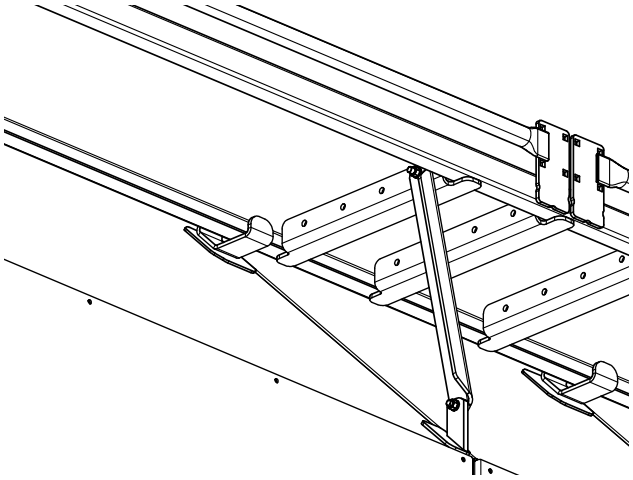

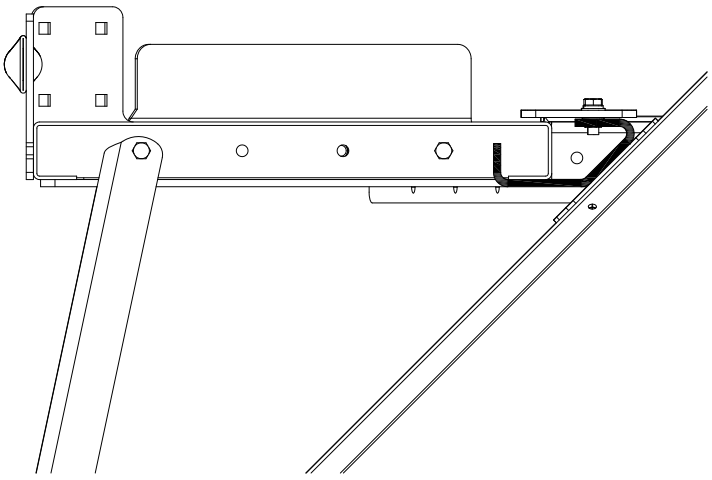

Item	Part No.	Description	Qty
1	D-5489	Washer - 13/32 ID x 13/16 OD x 16 Ga	3
2	N49230	Walkway - Main - 144 3/8 Lg with 8 hole plate	1
3	N49240	Walkway Addition	1
4	N49695	Walkway Section - 20 3/4 Lg	1
5	N50620	Walkway Support	3
6	N50729	End Plate	1
7	N51118	Kick Plate	1
8	N51238	Plate - Clamp	3
9	W-187	Hex Bolt - 3/8 x 1 1/4 Lg.	6
10	W-475	Hex Bolt - 3/8 x 1 Lg.	13
11	W-514	Hex Nut - 3/8	16
12	W-523	Lockwasher - 3/8	19
13	N51146	Kick Plate	1

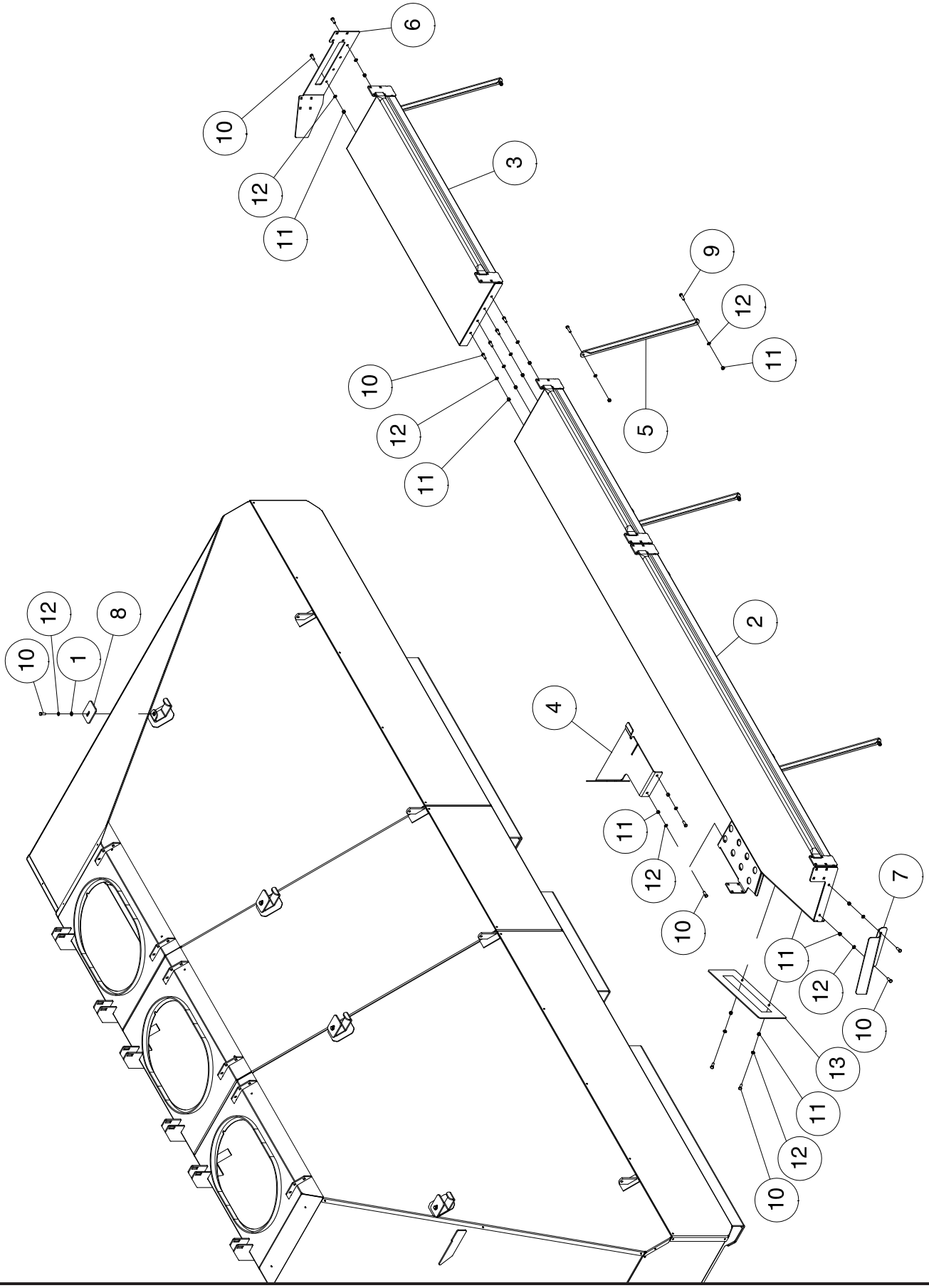
6
10
12
11
3
9
12
11
10
12
11
5
2
12
8
10
1
4
11
12
10
7
11
12
10
13
11
12
10

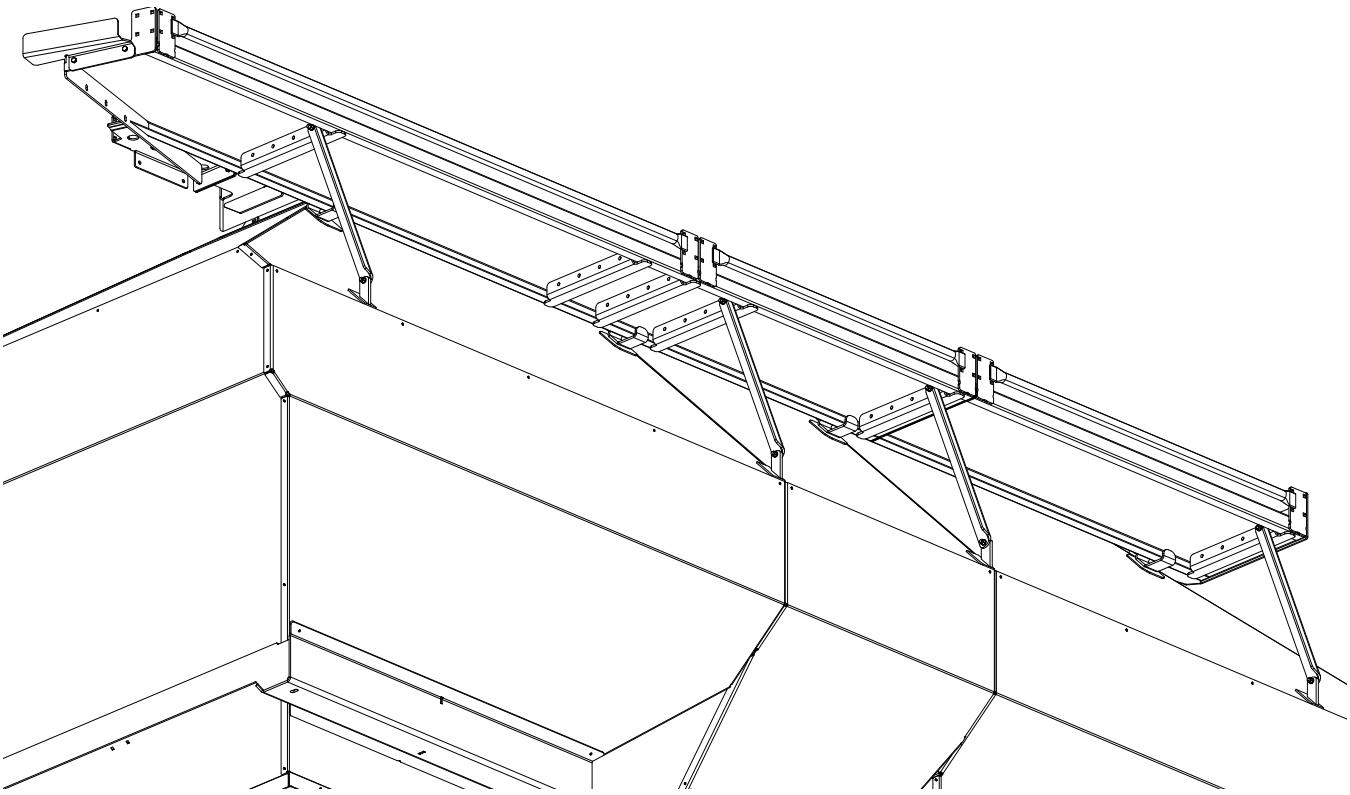

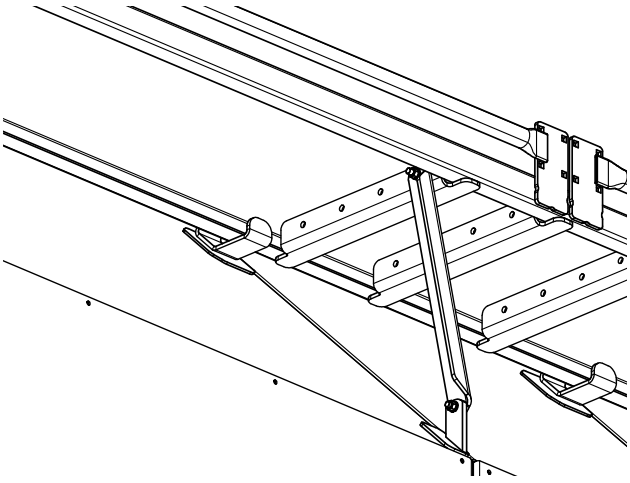

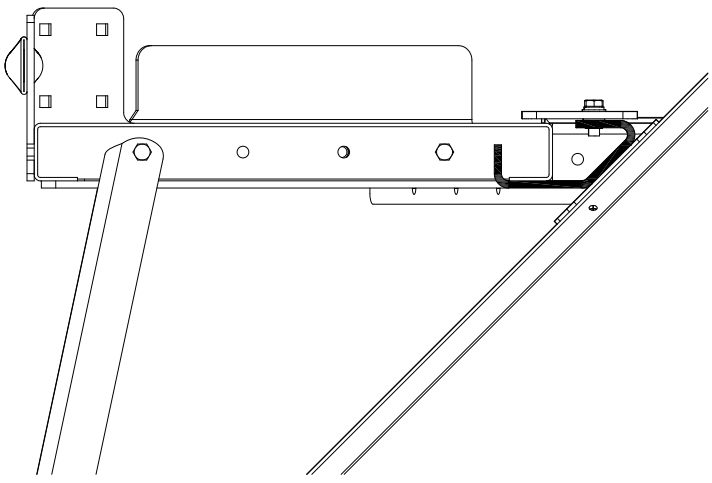

Item	Part No.	Description	Qty
1	D-5489	Washer - 13/32 ID x 13/16 OD x 16 Ga	4
2	N49230	Walkway - Main - 144 3/8 Lg with 8 hole plate	1
3	N49231	Walkway Section - 56 13/16 Lg	1
4	N49240	Walkway Addition	1
5	N50620	Walkway Support	4
6	N50729	End Plate	1
7	N51118	Kick Plate	1
8	N51238	Plate - Clamp	4
9	W-187	Hex Bolt - 3/8 x 1 1/4 Lg	8
10	W-475	Hex Bolt - 3/8 x 1 Lg	14
11	W-514	Hex Nut - 3/8	18
12	W-523	Lockwasher - 3/8	22
13	N51146	Kick Plate	1

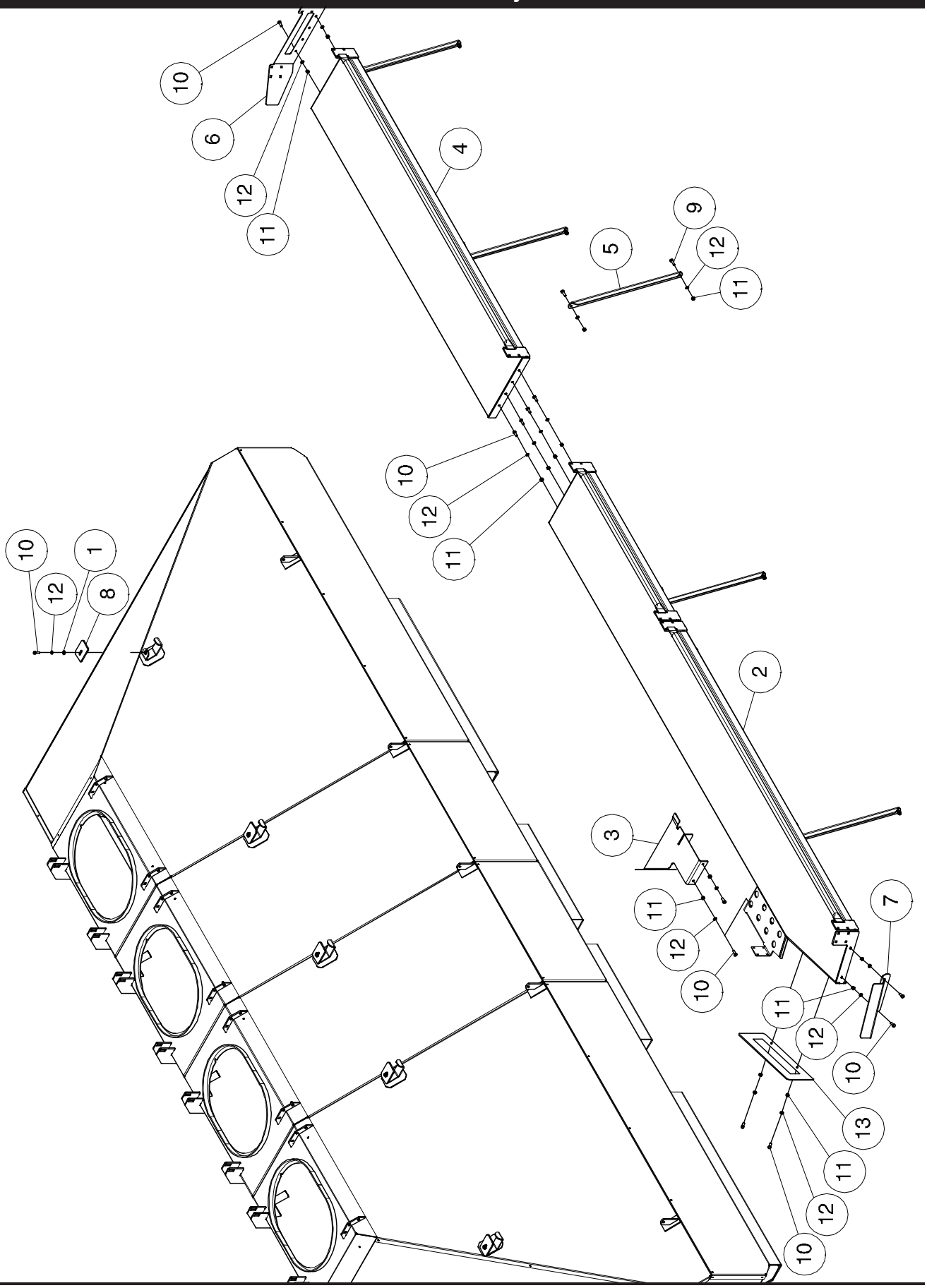
10
6
12
11
4
9
12
11
5
10
12
11
10
12
8
1
2
3
11
12
10
7
11
12
10
13
11
12
10

Tanks & Handrails - 9650 Walkway

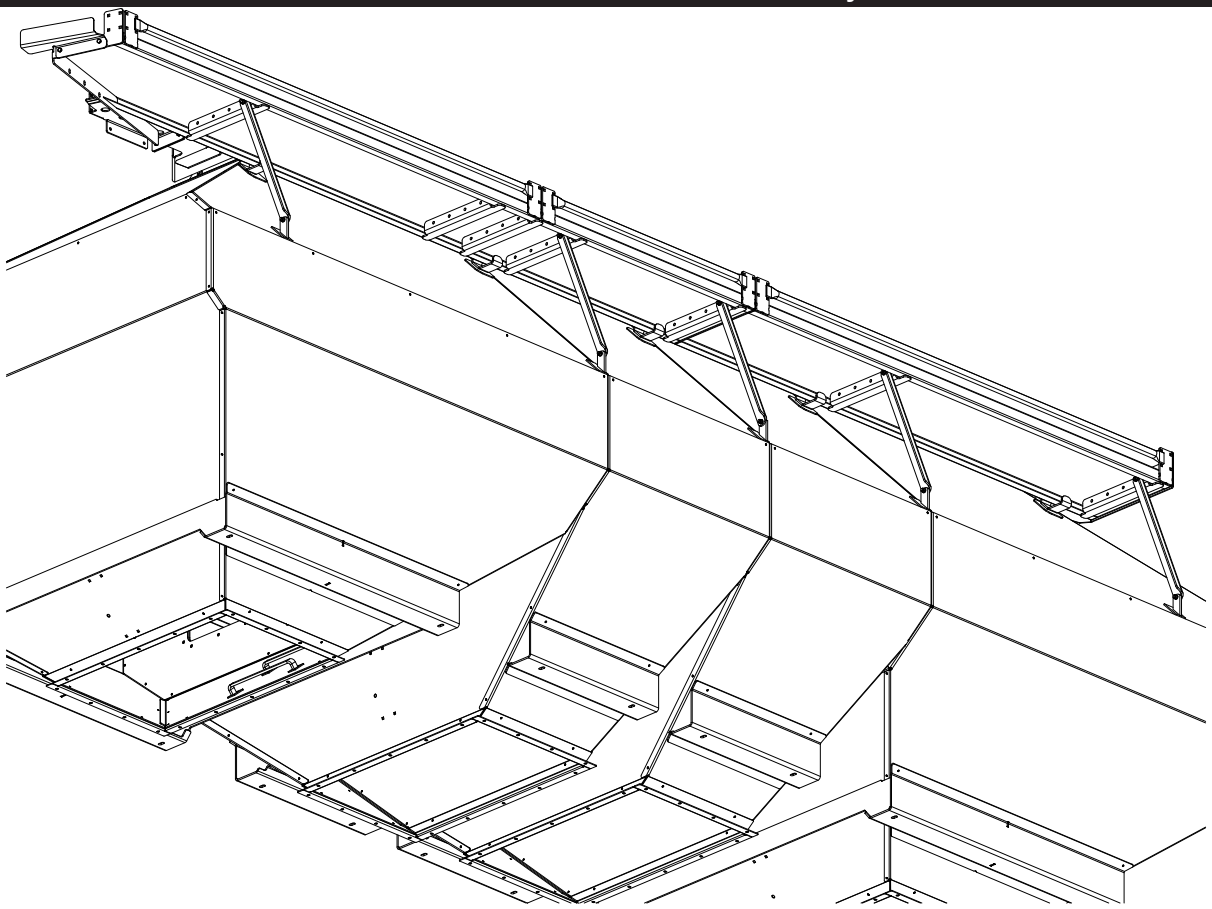

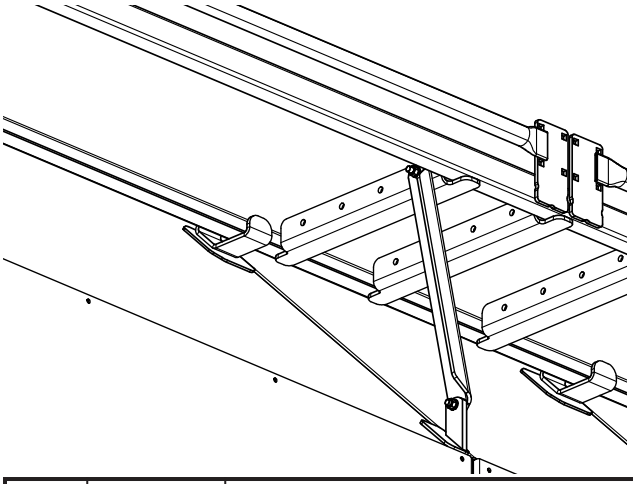

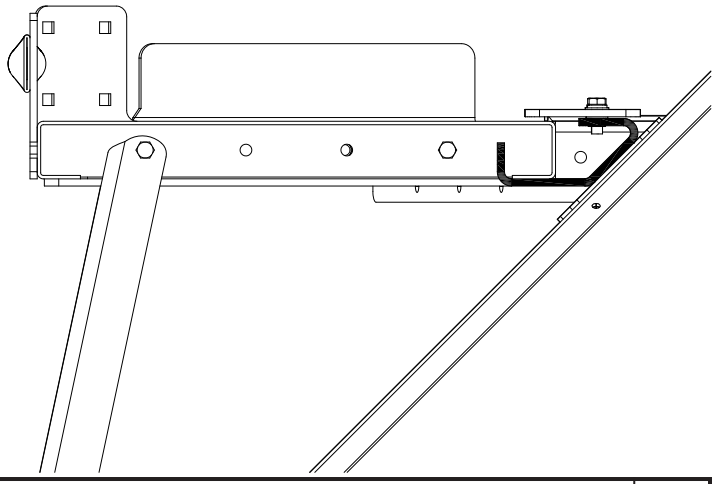

Item	Part No.	Description	Qty
1	D-5489	Washer - 13/32 ID x 13/16 OD x 16 Ga	5
2	N49230	Walkway - Main - 144 3/8 Lg with 8 hole plate	1
3	N49240	Walkway Addition	1
4	N49693	Walkway Section - 92 7/8 Lg	1
5	N50620	Walkway Support	5
6	N50729	End Plate	1
7	N51118	Kick Plate	1
8	N51238	Plate - Clamp	5
9	W-187	Hex Bolt - 3/8 x 1 1/4 Lg.	10
10	W-475	Hex Bolt - 3/8 x 1 Lg.	15
11	W-514	Hex Nut - 3/8	20
12	W-523	Lockwasher - 3/8	25
13	N51146	Kick Plate	1

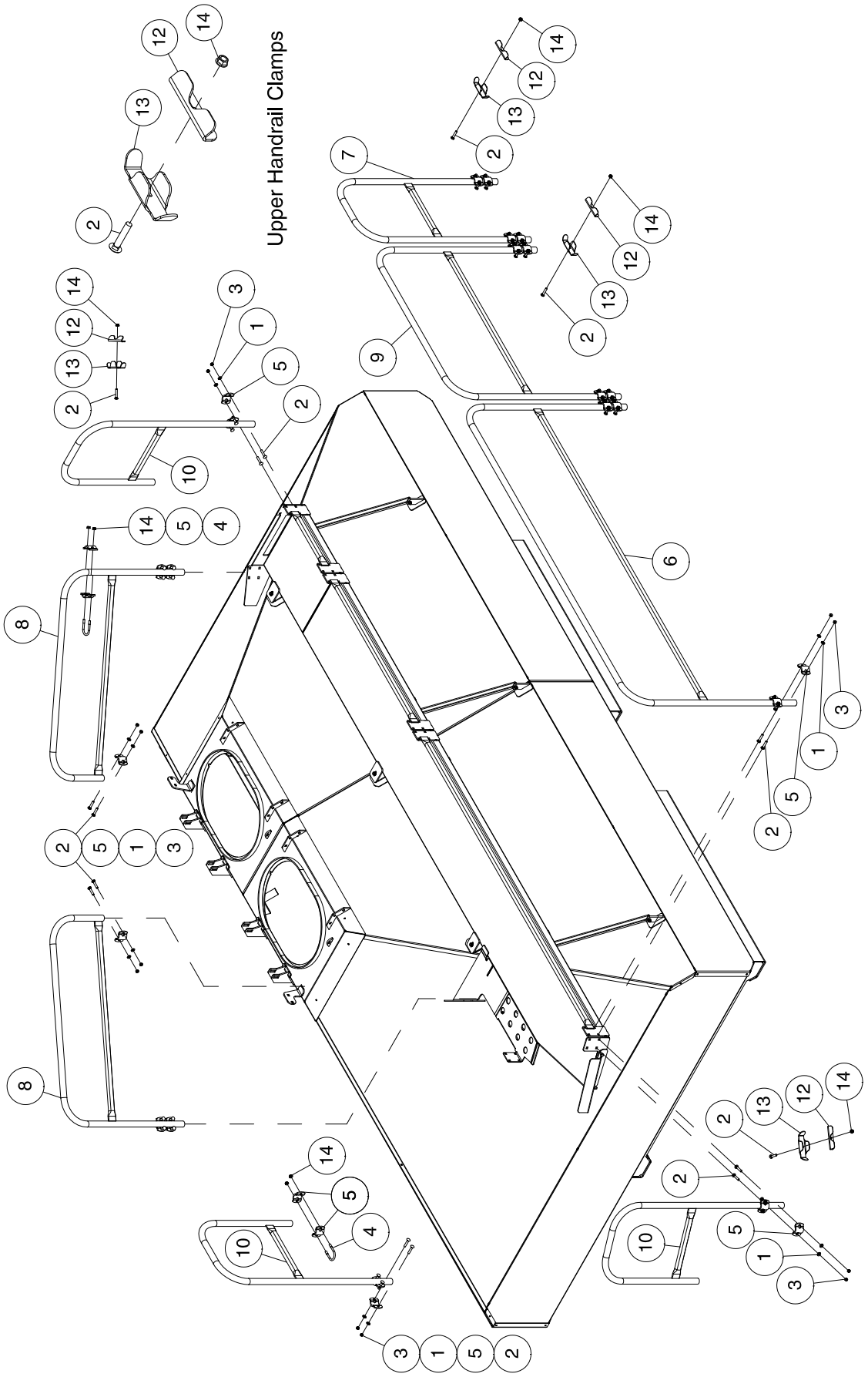
Upper Handrail Clamps

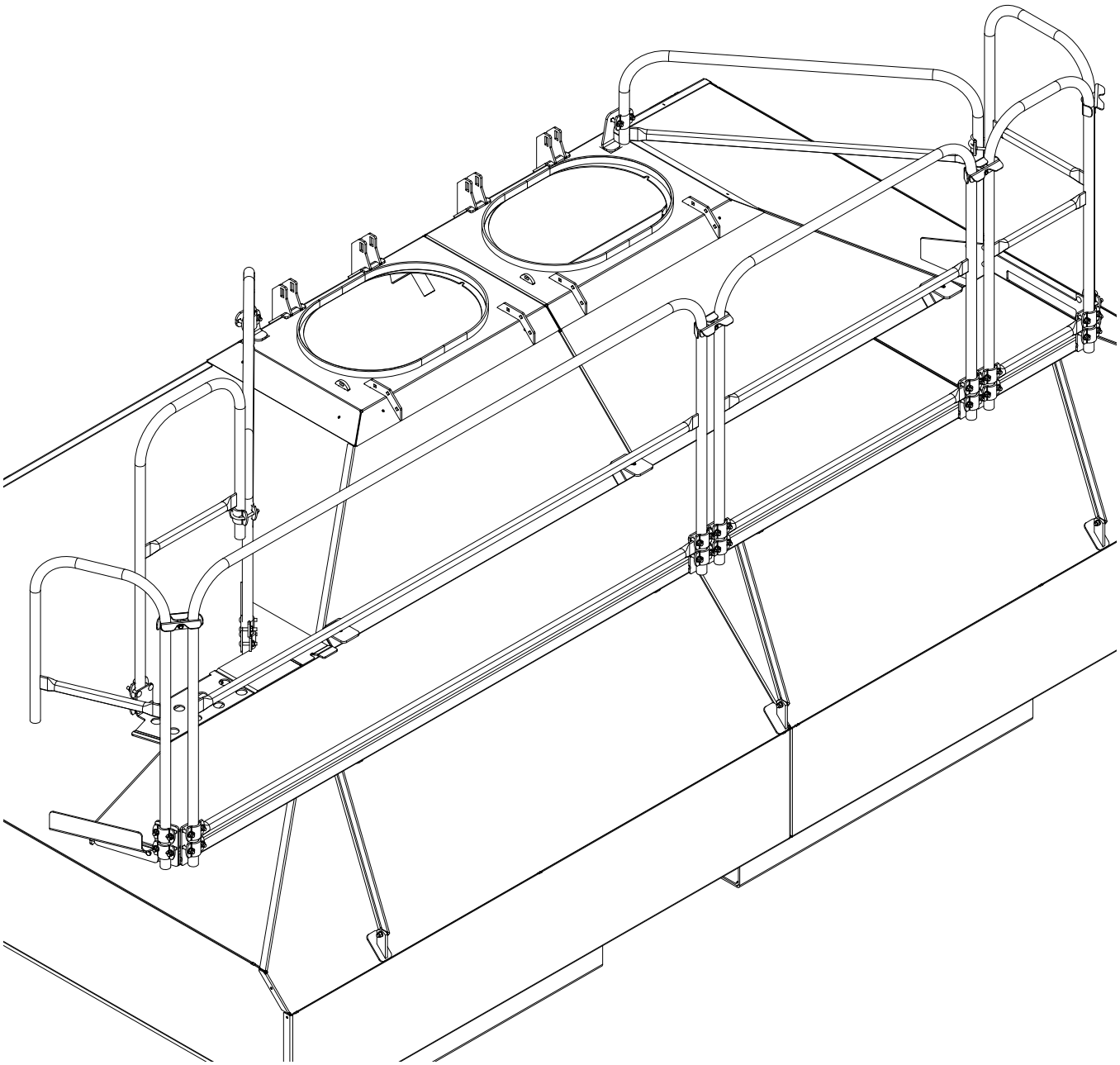

Item	Part No.	Description	Qty
1	D-5489	Washer - 13/32 ID x 13/16 OD x 16 Ga	51
2	D12821	Carriage Bolt - 3/8 x 2 Lg	52
3	M-3388	Locknut - 3/8 Unitorque	48
4	N37620	U-Bolt - 3/8 x 2 1/8 x 3 UL	2
5	N37622	U-Clamp Plate	28
6	N49245	Handrail - 91 1/16 Lg (Overall)	1
7	N49605	Handrail - 18 15/16 Lg (Overall)	1
8	N49615	Handrail - 45 13/16 Lg (Overall)	2
9	N50700	Handrail - 45 13/16 Lg (Overall)	1
10	N50945	Handrail - End - 18 15/16 Lg (Overall)	3
12	N53175	Plate Clamp - Backing Plate	4
13	N53463	Handrail Clamp - 5 3/32 wide	4
14	S27987	Lock Nut - 3/8 Flanged Center Lock	8

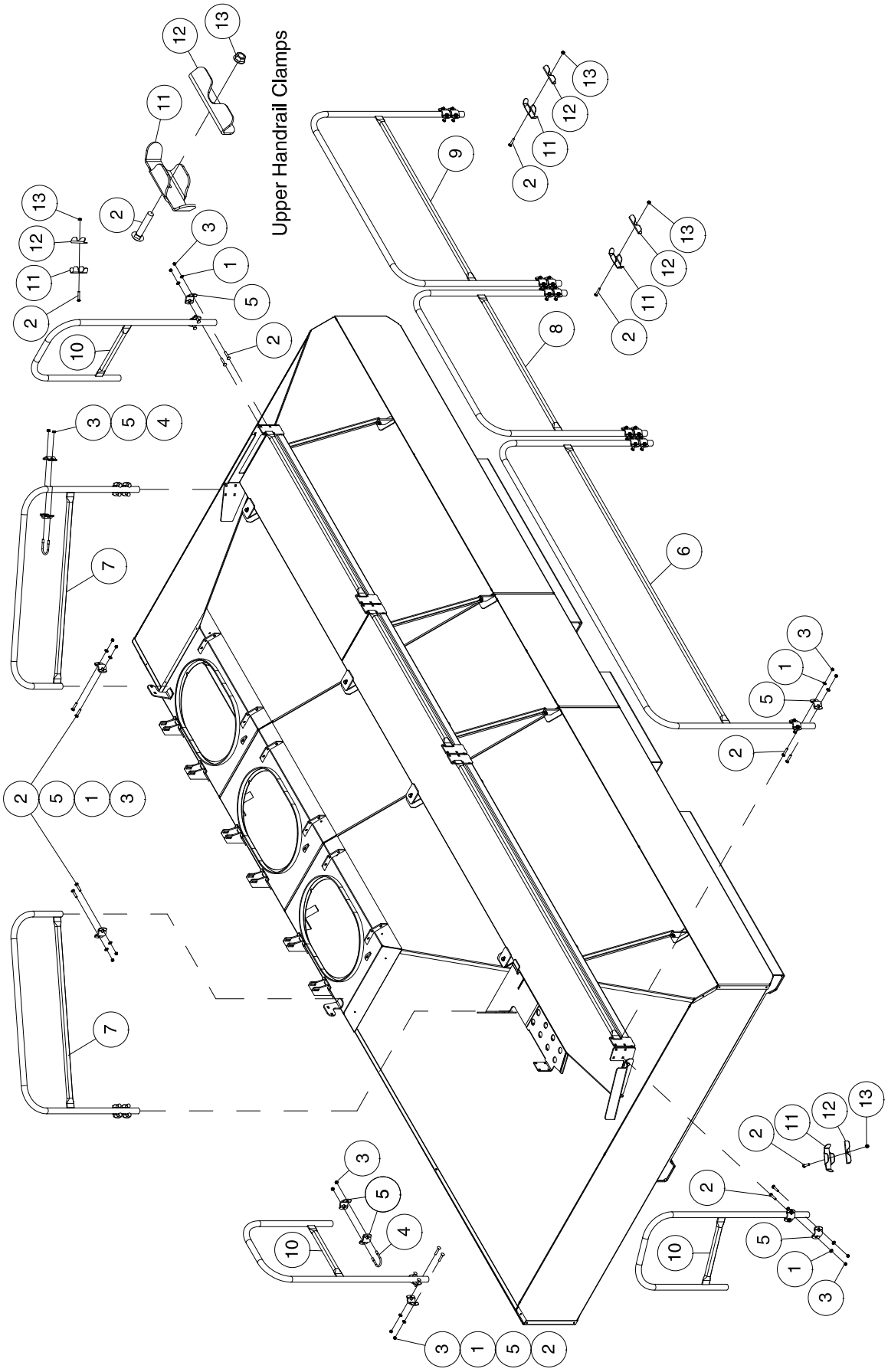
Upper Handrail Clamps

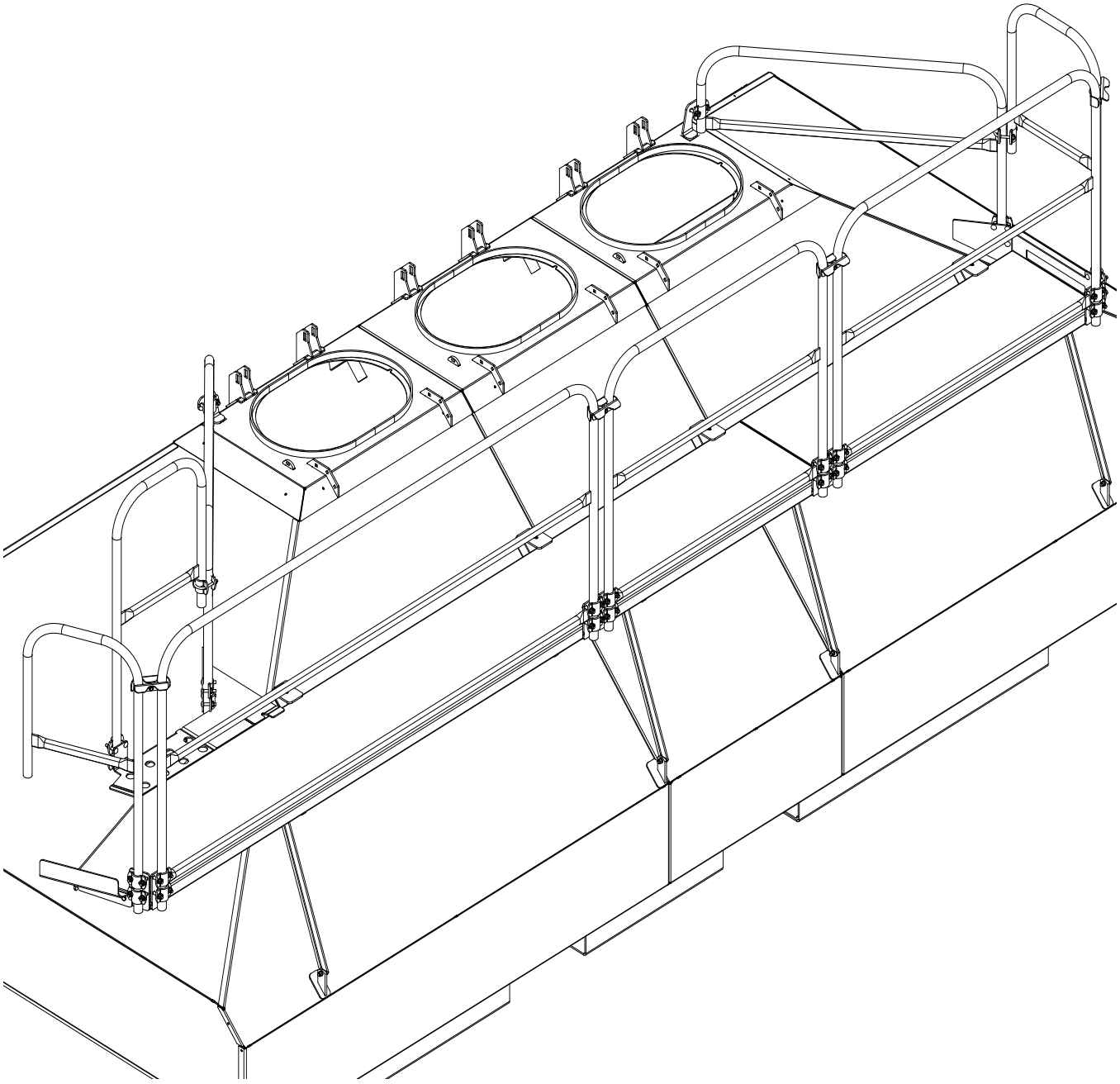

Item	Part No.	Description	Qty
1	D-5489	Washer - 13/32 ID x 13/16 OD x 16 Ga	52
2	D12821	Carriage Bolt - 3/8 x 2 Lg	52
3	M-3388	Locknut - 3/8 Unitorque	48
4	N37620	U-Bolt - 3/8 x 2-1/8 x 3	2
5	N37622	U-Clamp Plate	28
6	N49245	Handrail - 91 1/16 Lg (Overall)	1
7	N49615	Handrail - 45 13/16 Lg (Overall)	2
8	N50700	Handrail - 45 13/16 Lg (Overall)	1
9	N50705	Handrail - 55 Lg (Overall)	1
10	N50945	Handrail - End - 18 15/16 Lg (Overall)	3
11	N53463	Handrail Clamp - 5 3/32 wide	4
12	N53175	Plate Clamp - Backing Plate	4
13	S27987	Locknut - 3/8 w/ Flanged Center Lock	8

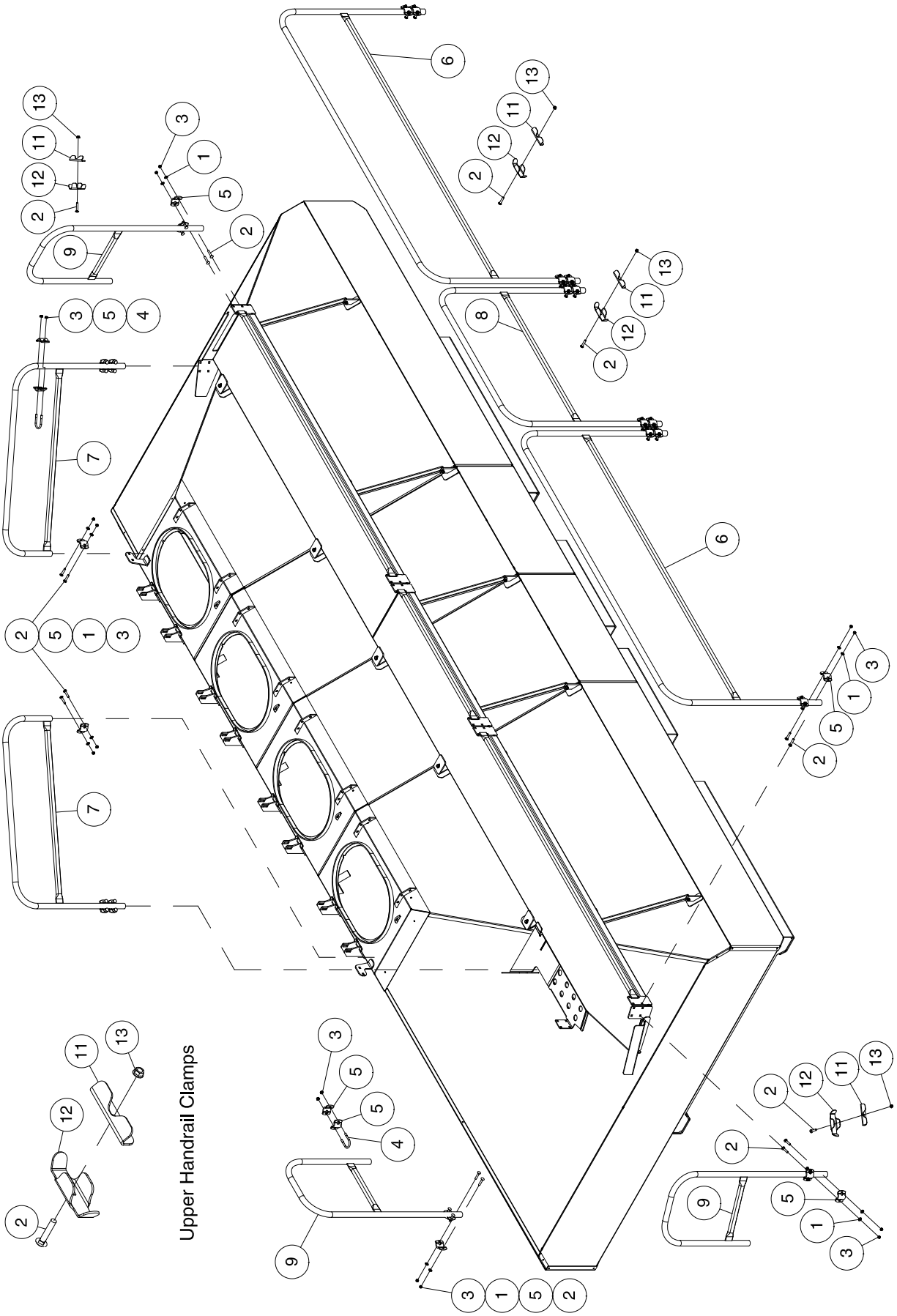
Upper Handrail Clamps

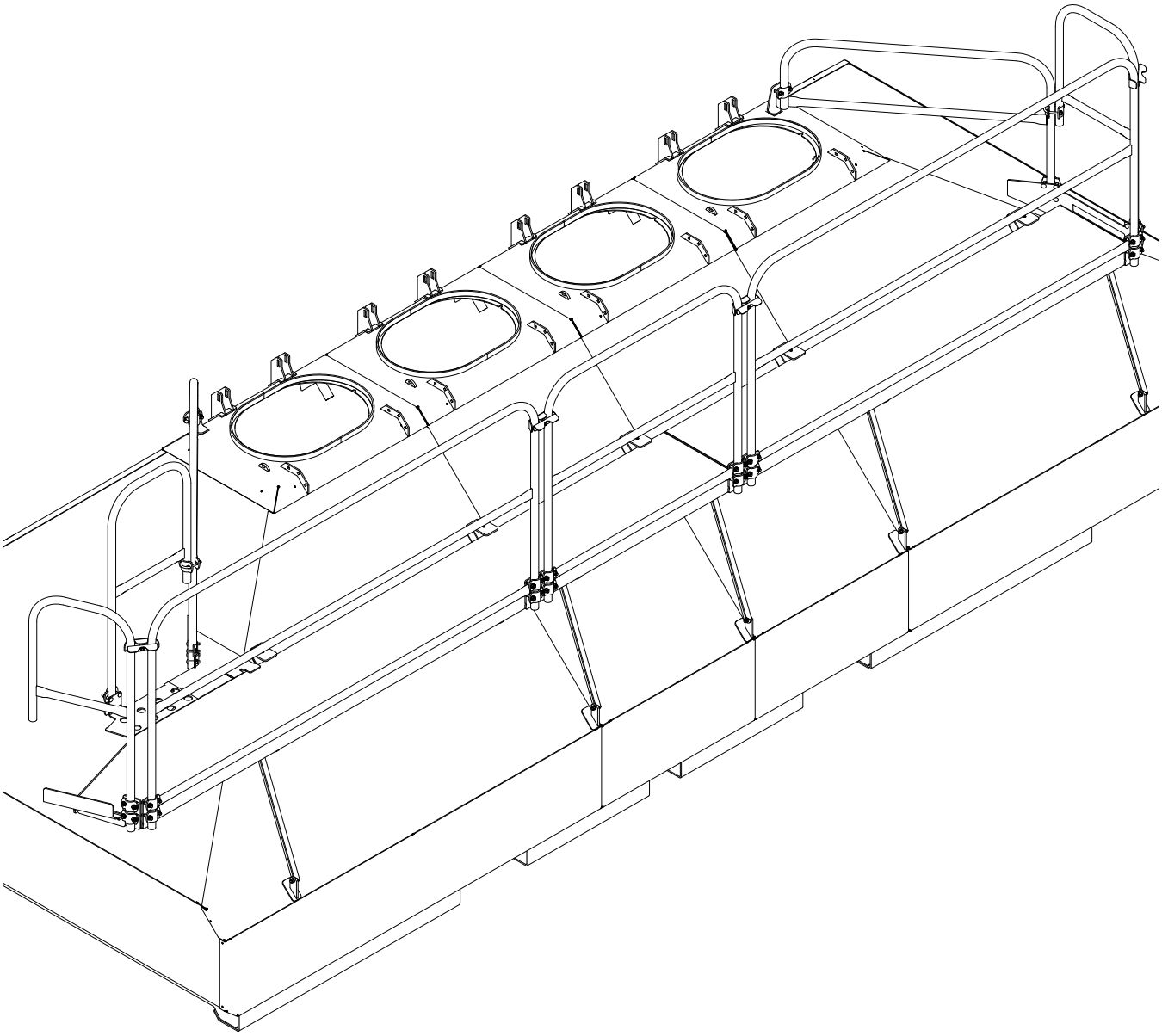

Item	Part No.	Description	Qty
1	D-5489	Washer - 13/32 ID x 13/16 OD x 16 Ga	53
2	D12821	Carriage Bolt - 3/8 x 2 Lg	52
3	M-3388	Locknut - 3/8 Unitorque	48
4	N37620	U-Bolt - 3/8 x 2 1/8 x 3 UL	2
5	N37622	U-Clamp Plate	28
6	N49245	Handrail - 91 1/16 Lg (Overall)	2
7	N49615	Handrail - 45 13/16 Lg (Overall)	2
8	N50700	Handrail - 45 13/16 Lg (Overall)	1
9	N50945	Handrail - End - 18 15/16 Lg (Overall)	3
11	N53175	Plate Clamp - Backing Plate	4
12	N53463	Handrail Clamp - 5 3/32 wide	4
13	S27987	Locknut - 3/8 w/ Flanged Center Lock	8

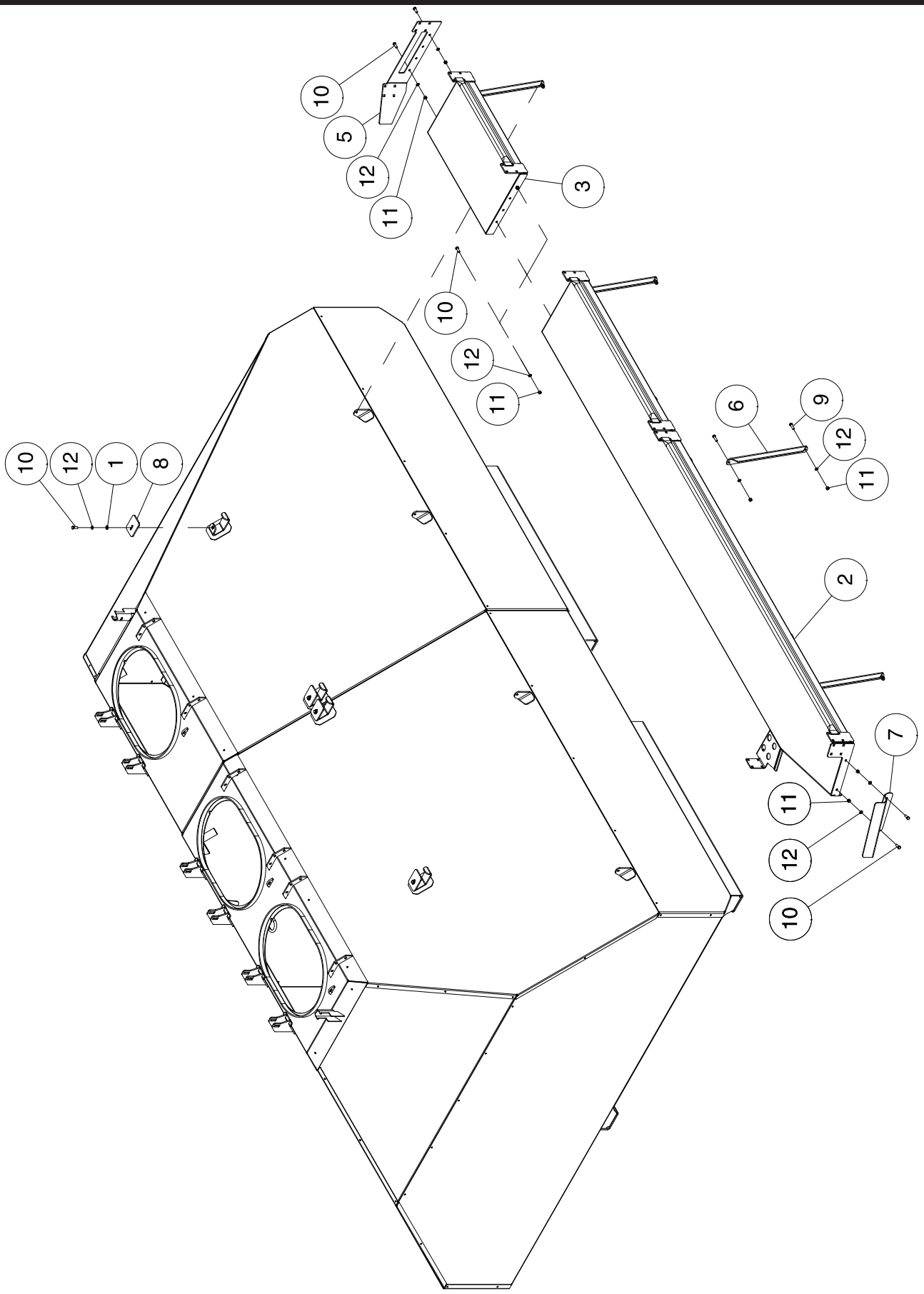
10
5
12
11
3
10
12
11
6
9
12
11
10
12
1
8
2
7
11
12
10

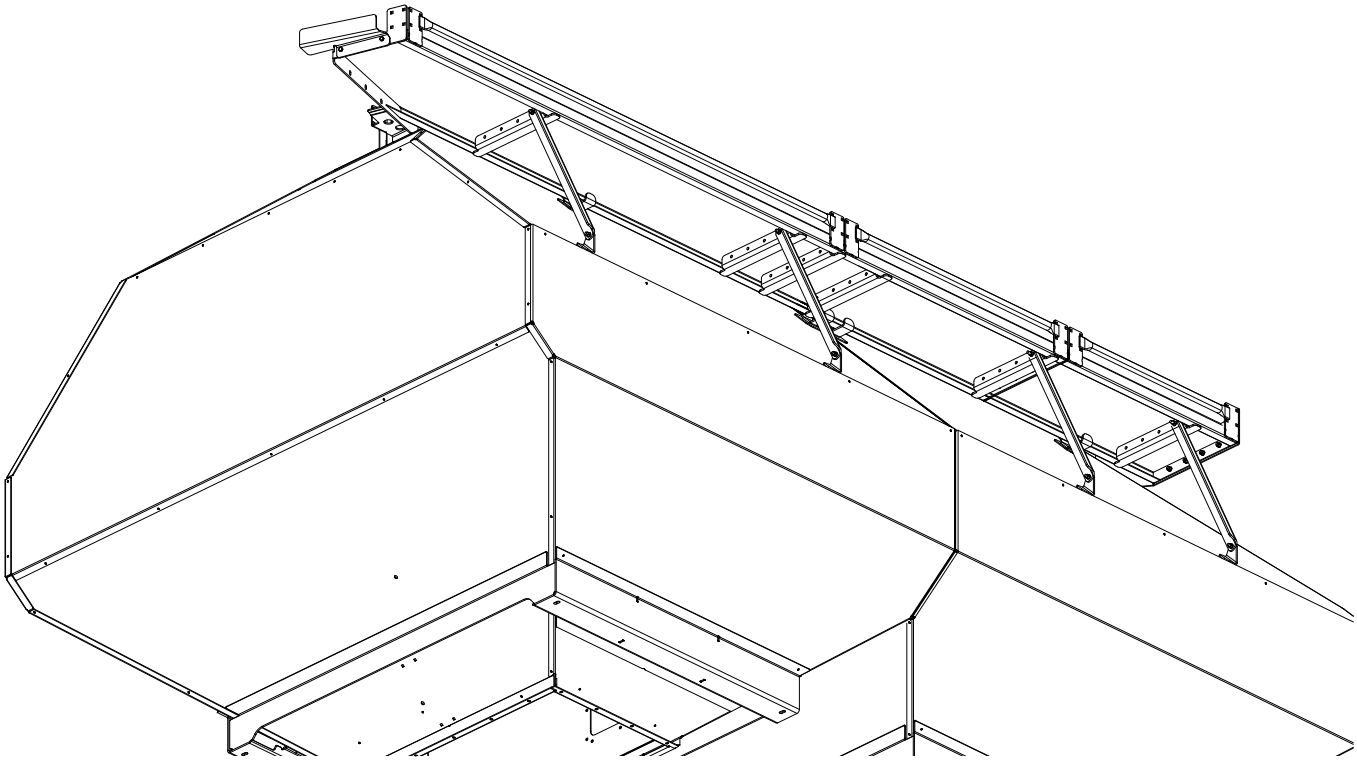

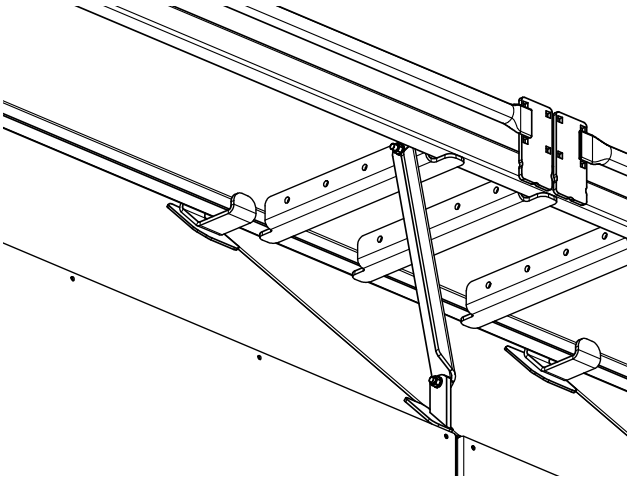

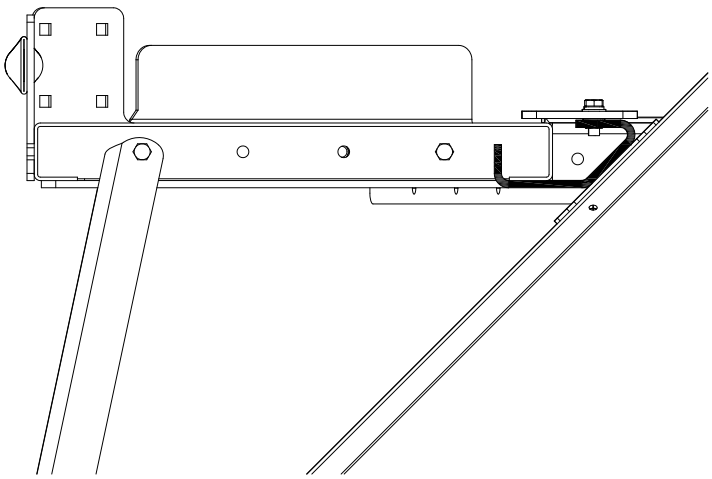

Item	Part No.	Description	Qty
1	D-5489	Washer - 13/32 ID x 13/16 OD x 16 Ga	4
2	N51850	Main Walkway Section - 144 3/8 Lg with 4 hole plate	1
3	N51852	Walkway Section - 36 3/8 Lg	1
4	N50655	Panel - Extension	1
5	N50729	End Plate	1
6	N51890	Bracket - Walkway Support - 28 1/2 hole centers	4
7	N51118	Kick Plate	1
8	N51238	Plate - Clamp	4
9	W-187	Hex Bolt - 3/8 x 1 1/4 Lg	8
10	W-475	Hex Bolt - 3/8 x 1 Lg	10
11	W-514	Hex Nut - 3/8	14
12	W-523	Lockwasher - 3/8	18

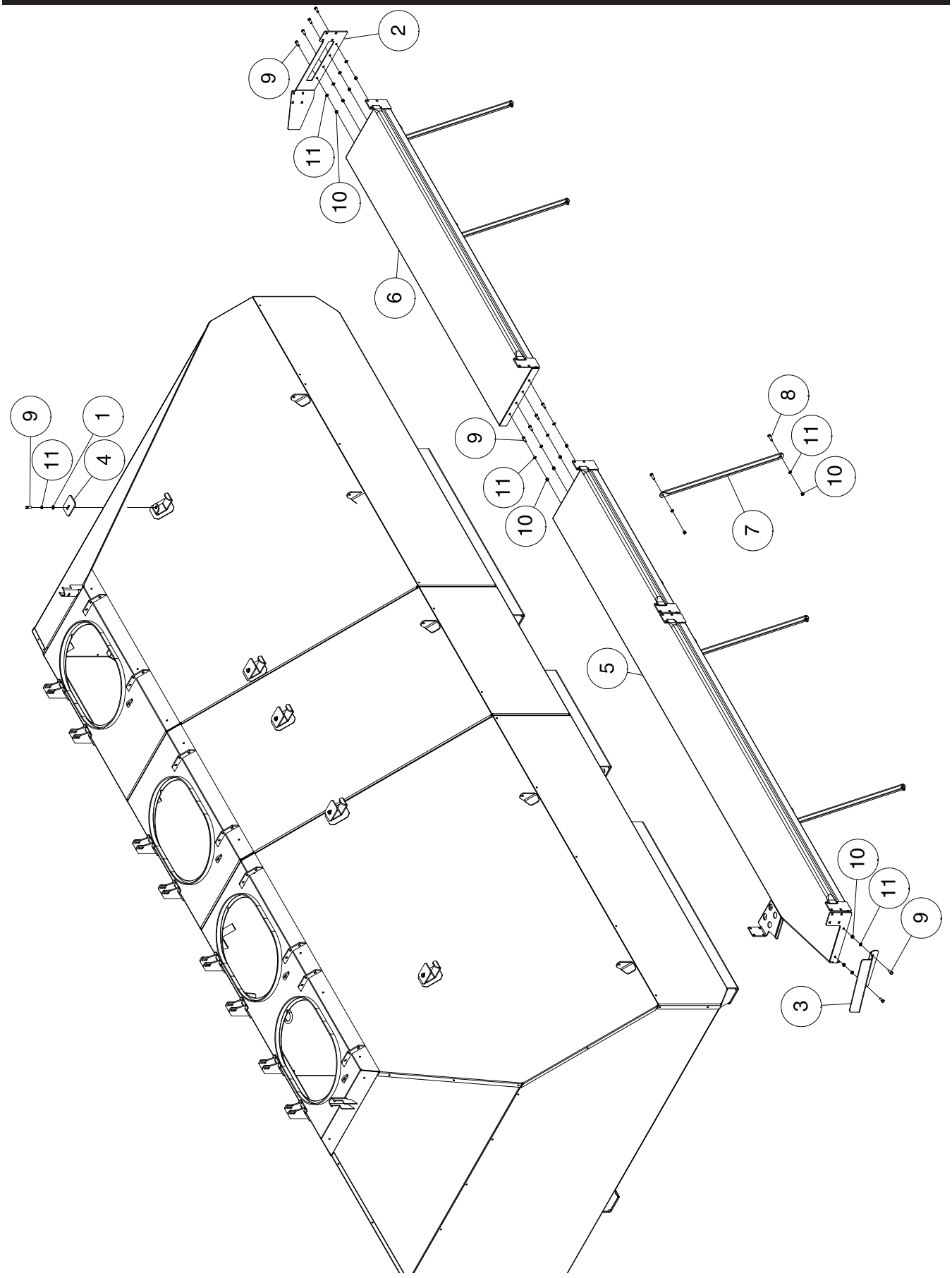
2
9
11
10
6
9
1
11
4
9
11
10
8
11
10
7
5
10
11
9
3

Tanks & Handrails - 9680 Walkway

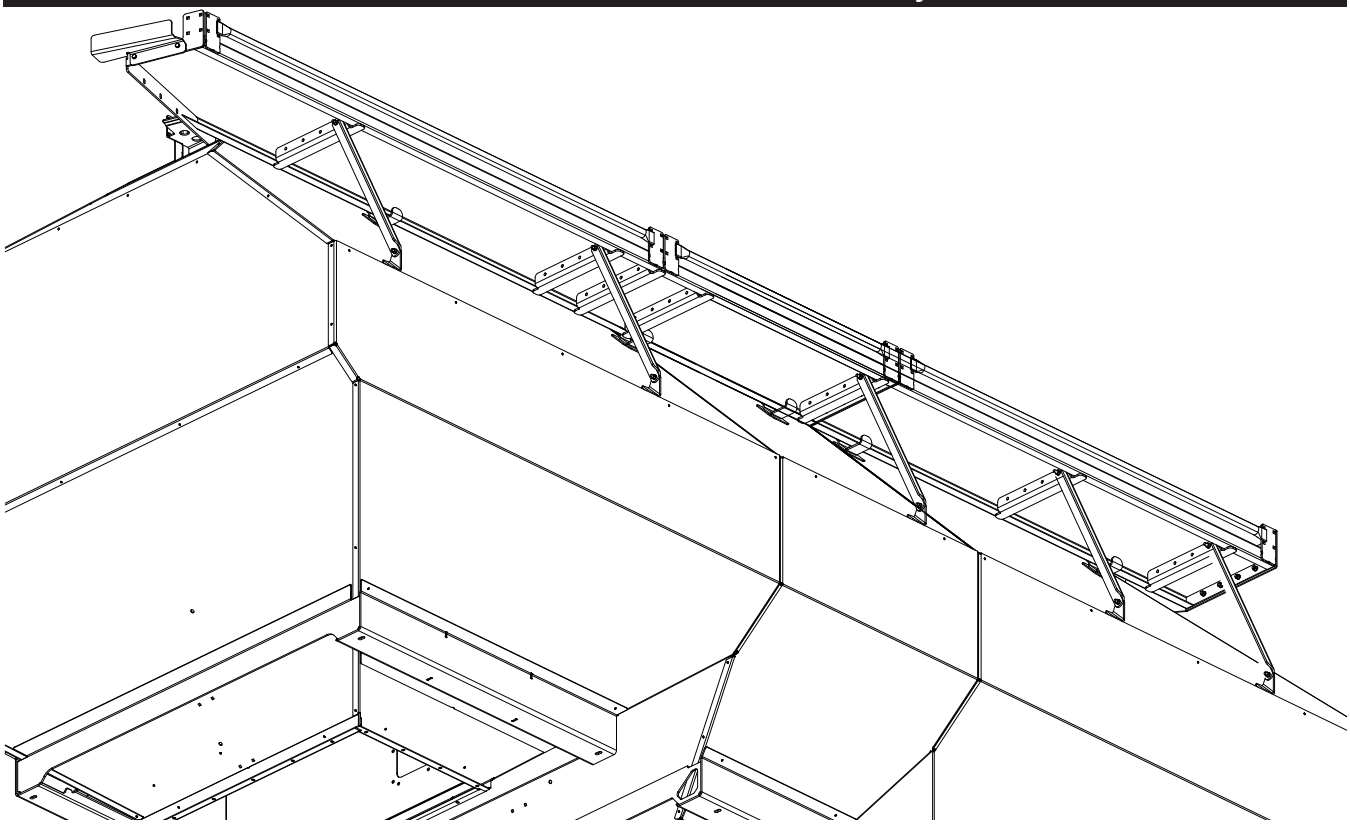

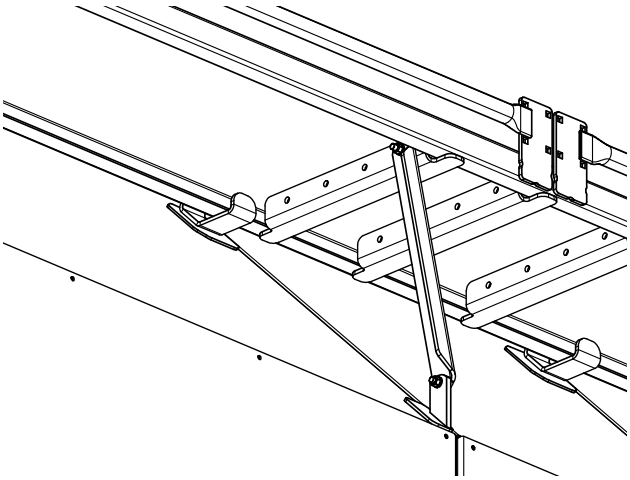

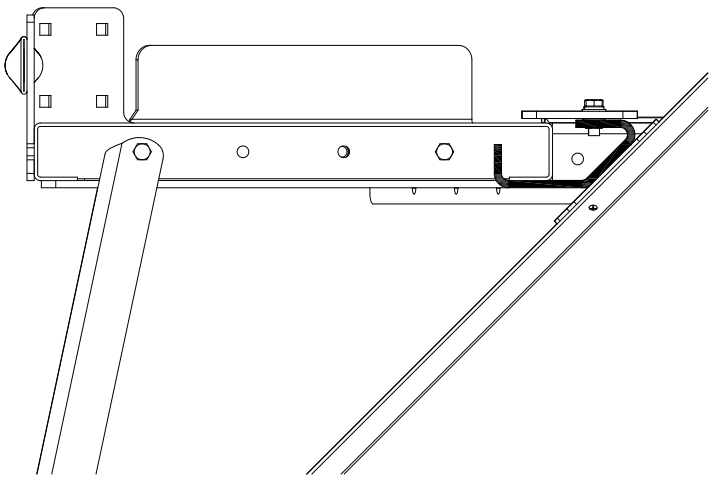

Item	Part No.	Description	Qty
1	D-5489	Washer - 13/32 ID x 13/16 OD x 16 Ga	6
2	N50729	End Plate	1
3	N51118	Kick Plate	1
4	N51238	Plate - Clamp	6
5	N51850	Walkway Section- Rear - 144 3/8 Lg with **4 hole plate**	1
6	N51853	Walkway Section - Front - 76 7/16 Lg	1
7	N51890	Bracket - Walkway Support - 28 1/2 hole centers	6
8	W-187	Hex Bolt - 3/8 x 1 1/4 Lg.	12
9	W-475	Hex Bolt - 3/8 x 1 Lg.	16
10	W-514	Hex Nut - 3/8	22
11	W-523	Lockwasher - 3/8	28

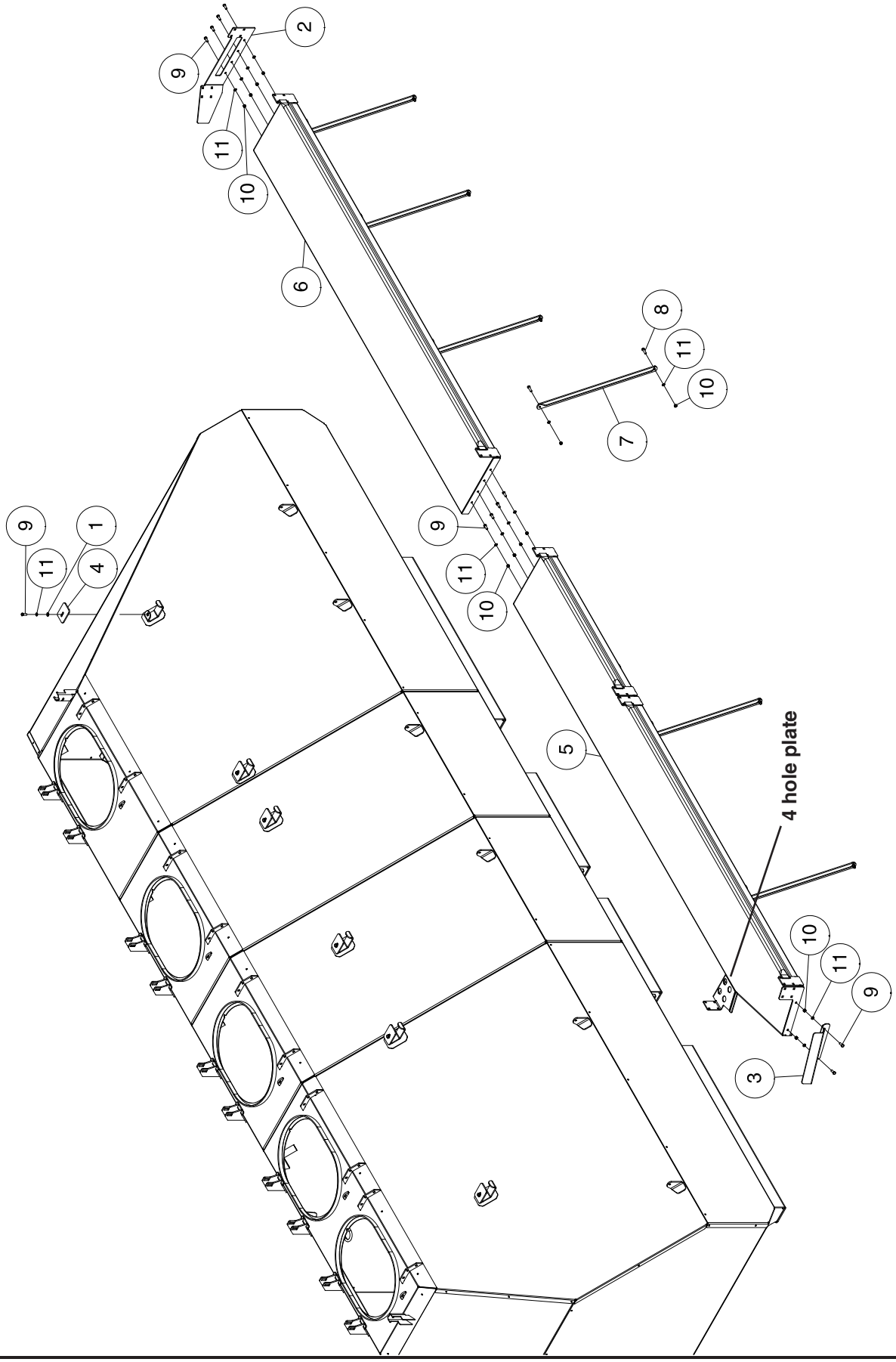
2
9
11
10
6
8
11
10
7
9
11
10
9
11
4
1
5
4 hole plate
10
11
9
3

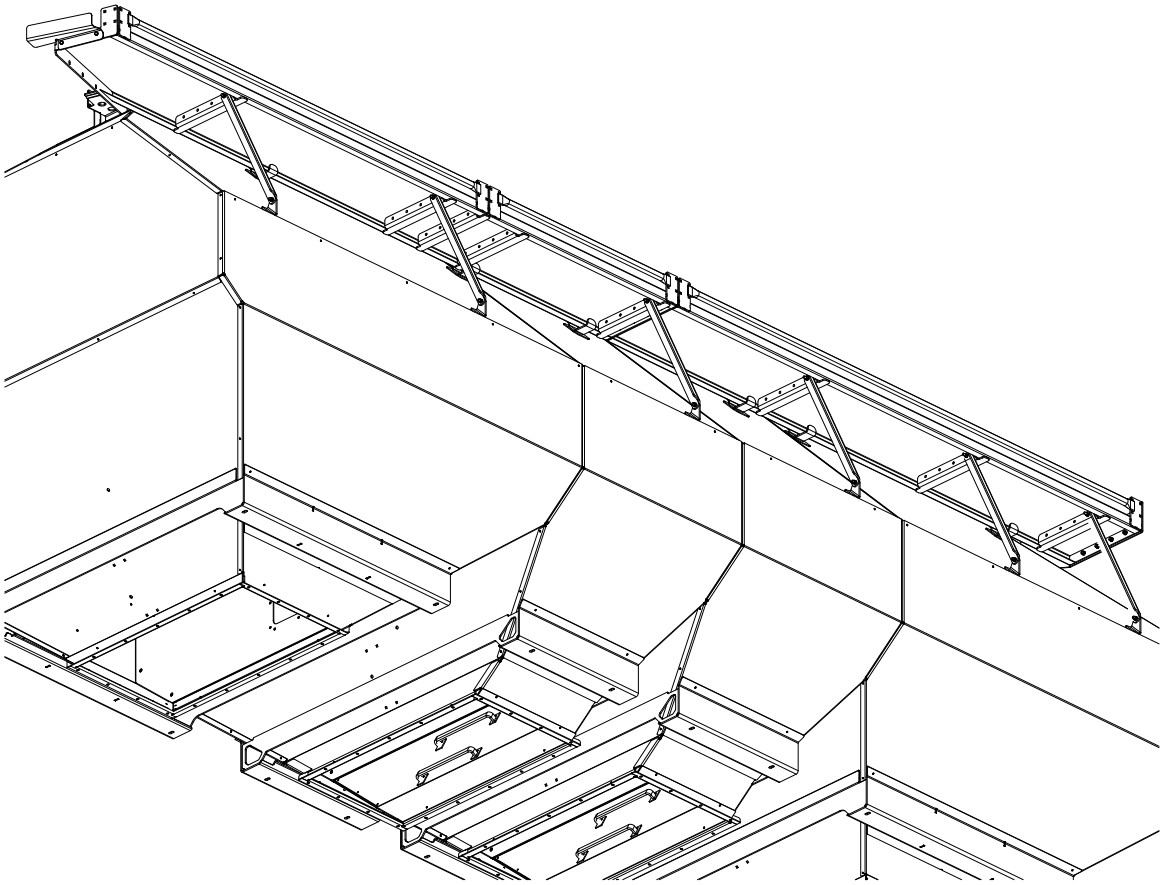

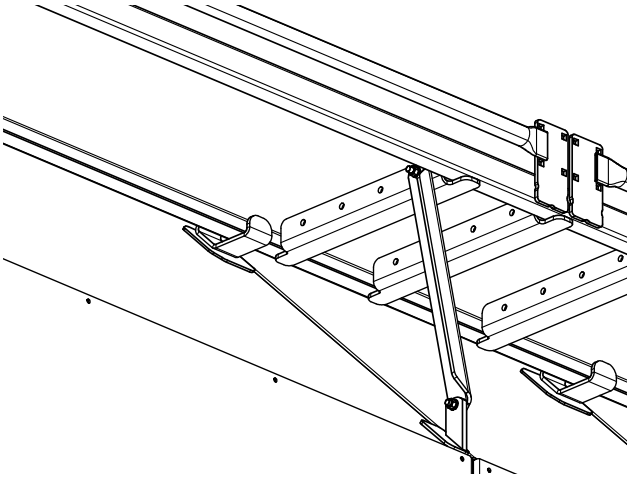

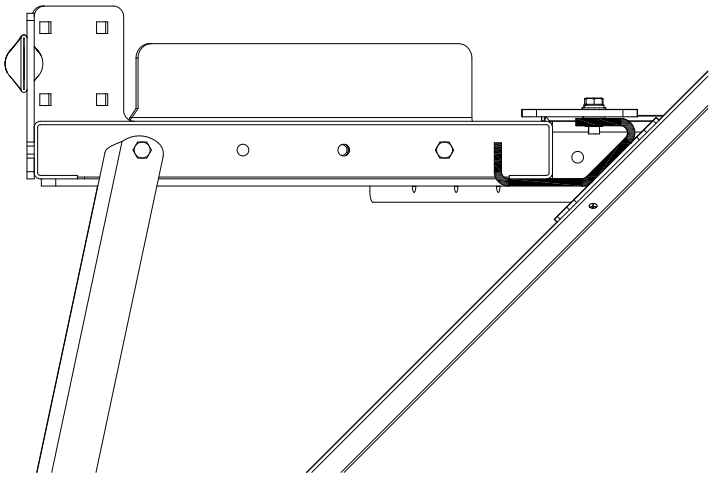

Item	Part No.	Description	Qty
1	D-5489	Washer - 13/32 ID x 13/16 OD x 16 Ga	6
2	N50729	End Plate	1
3	N51118	Kick Plate	1
4	N51238	Plate - Clamp	6
5	N51850	Walkway Section- Rear - 144 3/8 Lg with **4 hole plate**	1
6	N51854	Walkway Section - Front - 116 1/2 Lg	1
7	N51890	Bracket - Walkway Support - 28 1/2 hole centers - 9800	6
	N55514	Bracket - Walkway Support - 33 7/8 hole centers - 91000	6
8	W-187	Hex Bolt - 3/8 x 1 1/4 Lg.	12
9	W-475	Hex Bolt - 3/8 x 1 Lg.	16
10	W-514	Hex Nut - 3/8	22
11	W-523	Lockwasher - 3/8	28

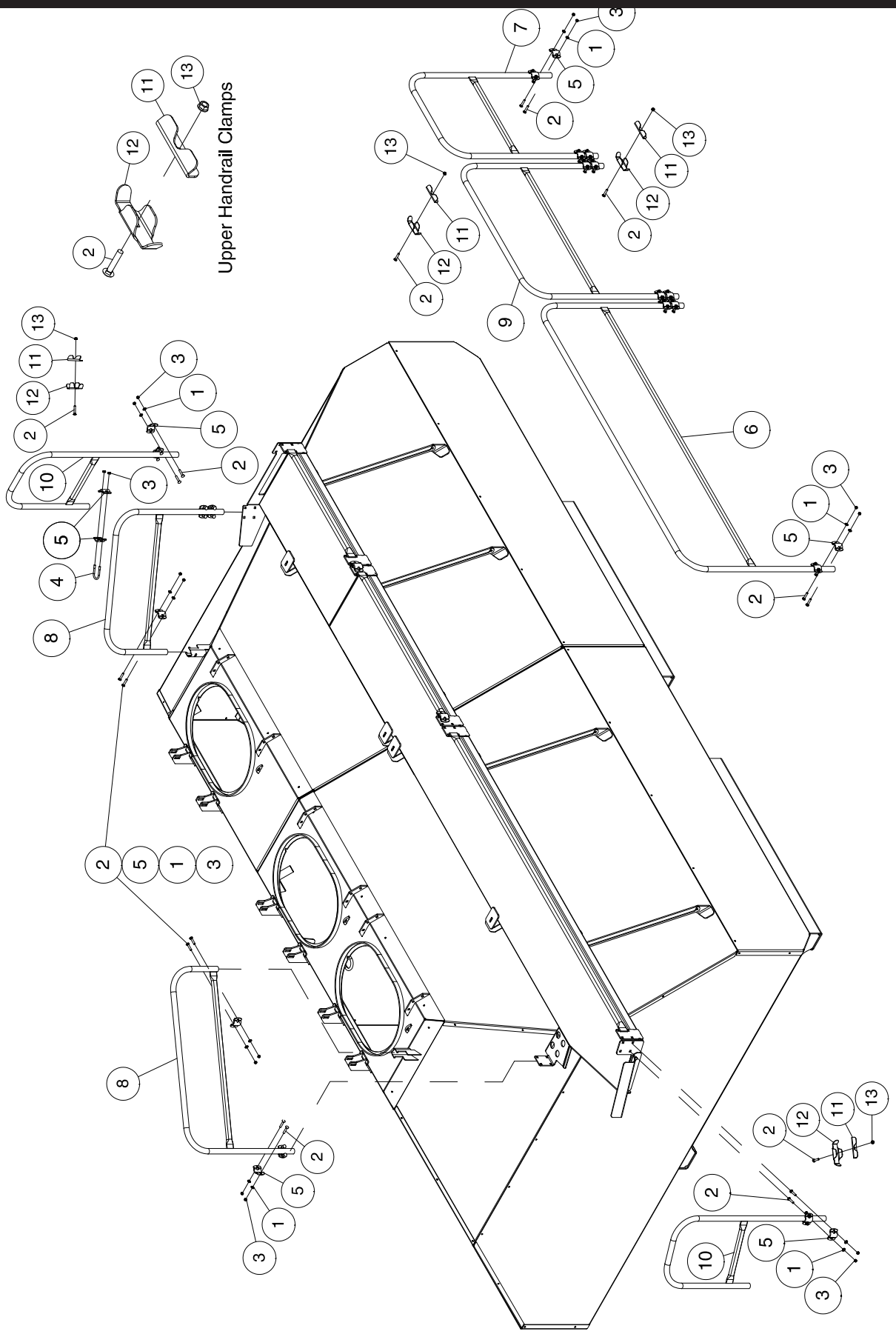
Upper Handrail Clamps

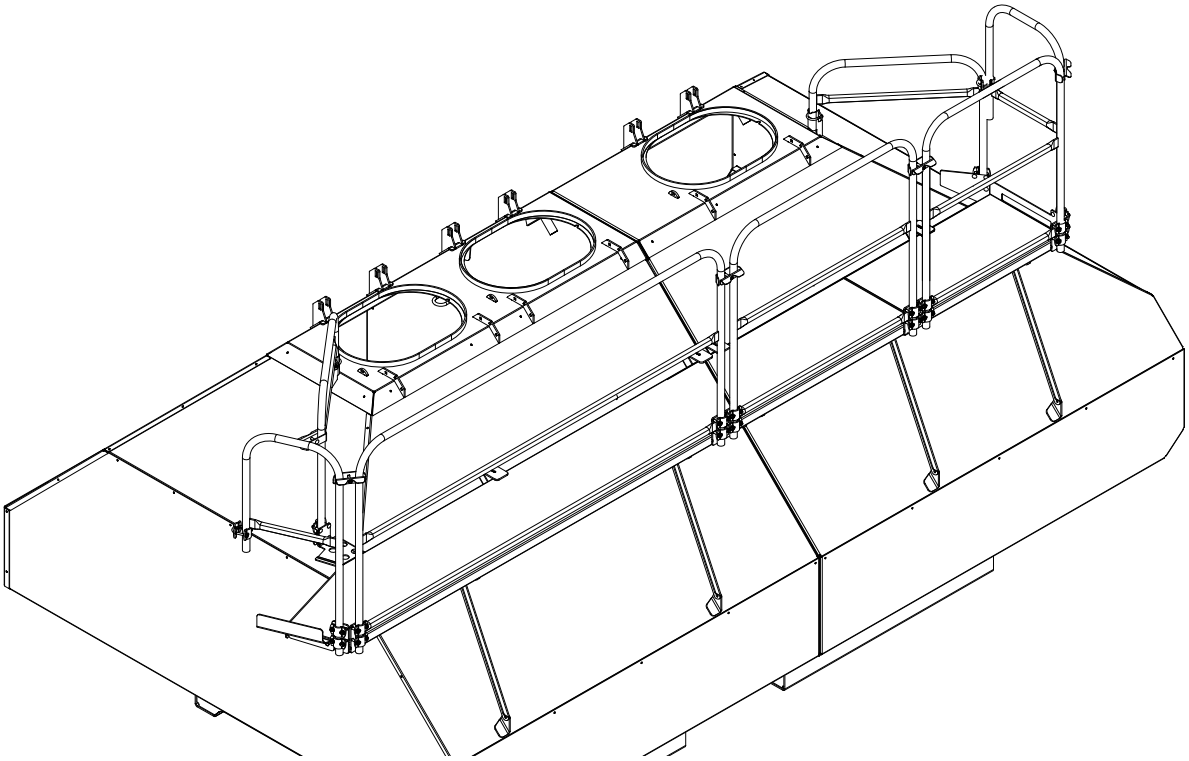

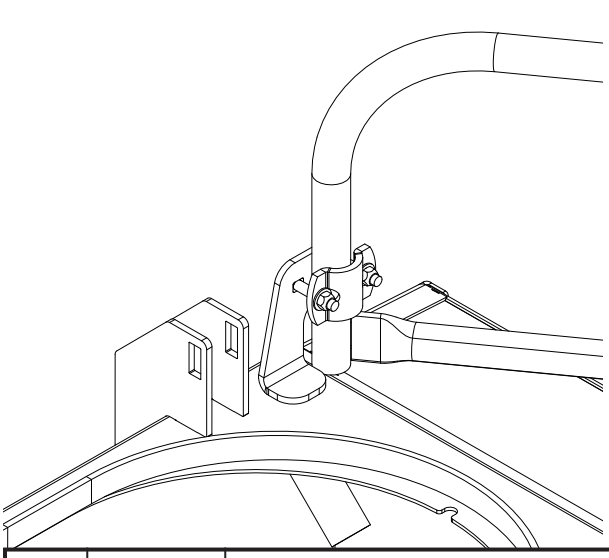

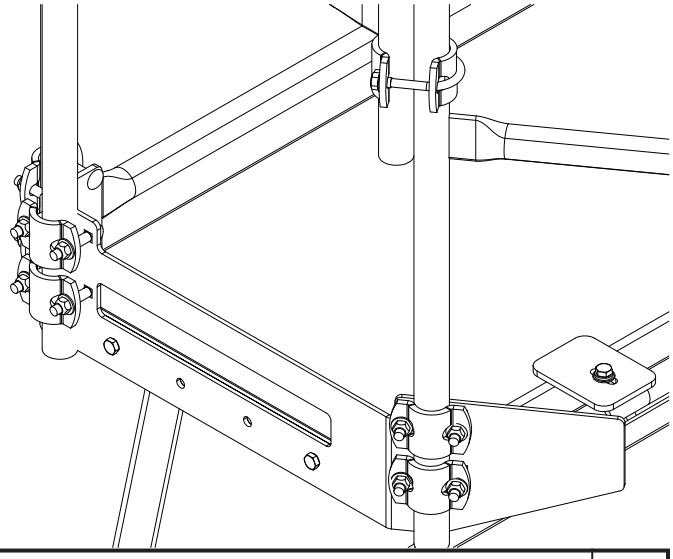

Item	Part No.	Description	Qty
1	D-5489	Washer - 13/32 ID x 13/16 OD x 16 Ga	48
2	D12821	Carriage Bolt - 3/8 x 2 Lg	48
3	M-3388	Locknut - 3/8 Unitorque	45
4	N37620	U-Bolt - 3/8 x 2 1/8 x 3 UL	1
5	N37622	U-Clamp Plate	24
6	N49245	Handrail - 91 1/16 Lg (Overall)	1
7	N51862	Handrail - 34 9/16 Lg (Overall)	1
8	N51865	Handrail - 31 5/16 Lg (Overall)	2
9	N50700	Handrail - 45 13/16 Lg (Overall)	1
10	N50945	Handrail - End - 18 15/16 Lg (Overall)	2
11	N53175	Plate Clamp - Backing Plate	4
12	N53463	Plate Clamp - Handrail Clamp - 5 5/8 wide	4
13	S27987	Lock Nut - 3/8 W/ Flange Center Lock	6

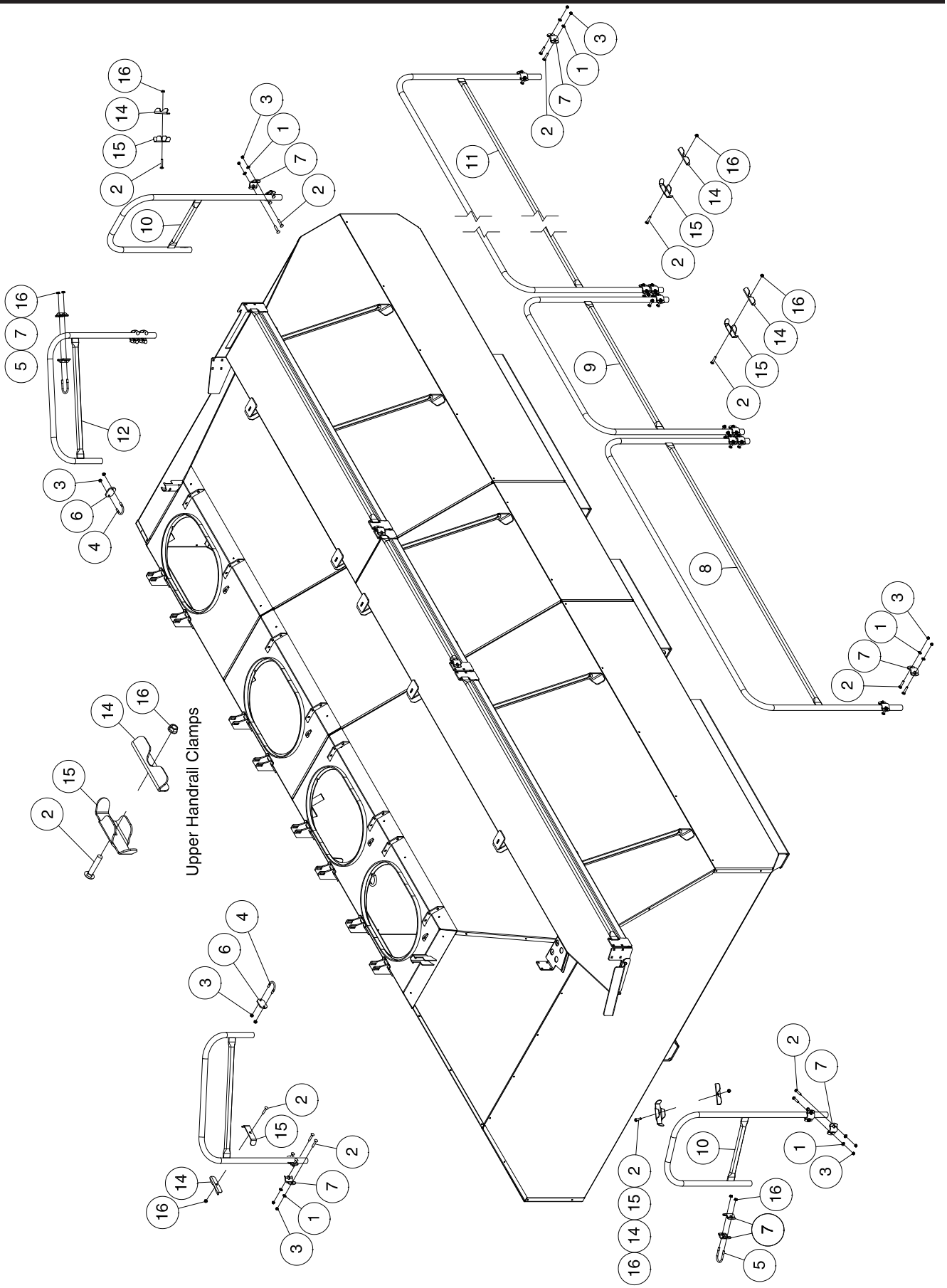
Upper Handrail Clamps

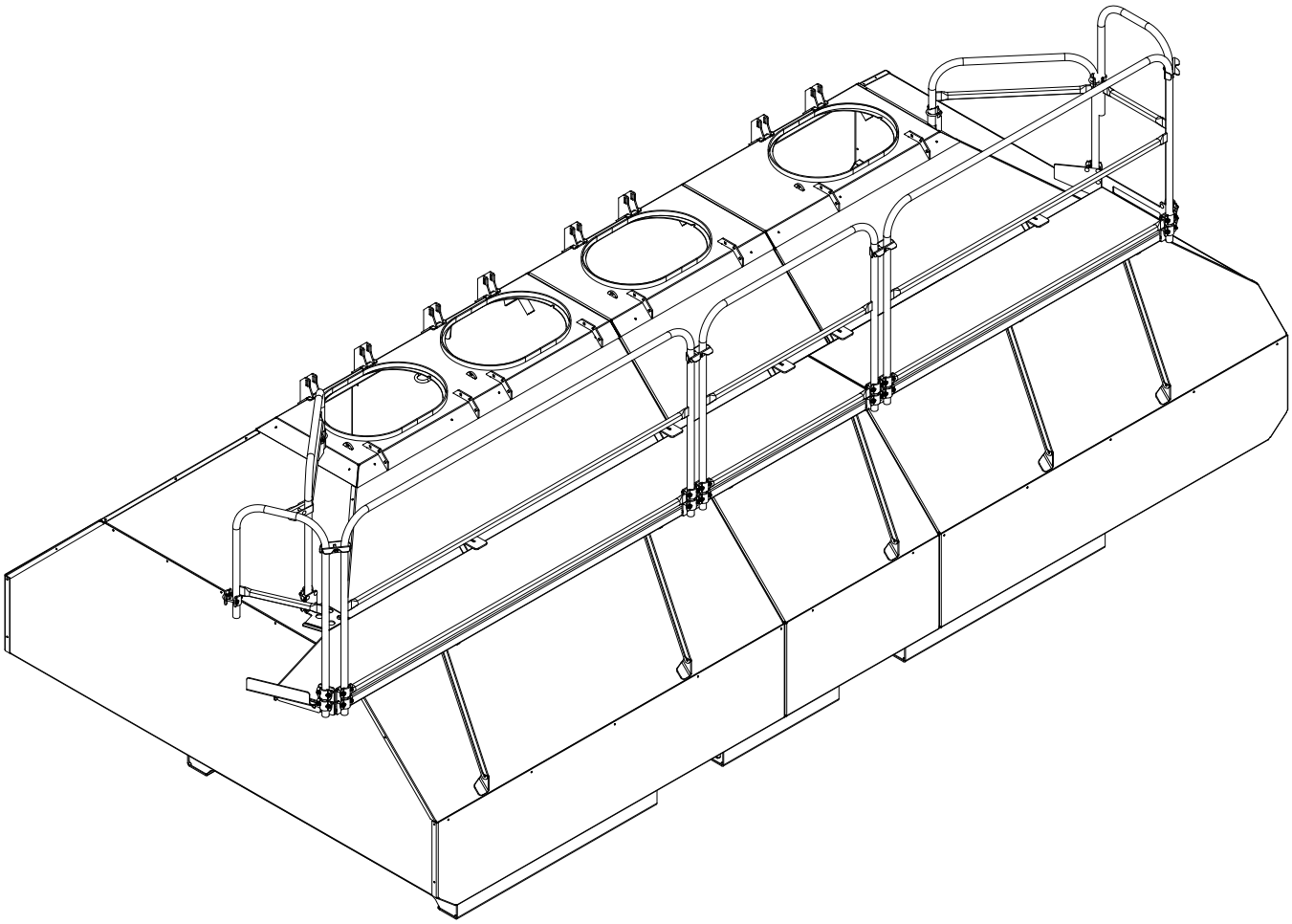

Item	Part No.	Description	Qty
1	D-5489	Washer - 13/32 ID x 13/16 OD x 16 Ga	40
2	D12821	Carriage Bolt - 3/8 x 2 Lg	45
3	M-3388	Locknut - 3/8 Unitorque	40
4	N37619	U-Bolt - 3/8 X 2 1/8 X 2 1/16 UL	2
5	N37620	U-Bolt - 3/8 x 2 1/8 x 3 UL	2
6	N37621	Lug	2
7	N37622	U-Clamp Plate	24
8	N49245	Handrail - 91 1/16 Lg (Overall)	1
9	N50700	Handrail - 45 13/16 Lg (Overall)	1
10	N50945	Handrail - End - 18 15/16 Lg (Overall)	2
11	N51863	Handrail - Front - 74 5/8 Lg (Overall)	1
12	N51865	Handrail - Top - 31 5/16 Lg (Overall)	2
13	* * * * *		
14	N53175	Plate Clamp - Backing Plate	5
15	N53463	Handrail Clamp - 5 5/8 wide	5
16	S27987	Locknut - 3/8 w/ Flanged Center Lock	13

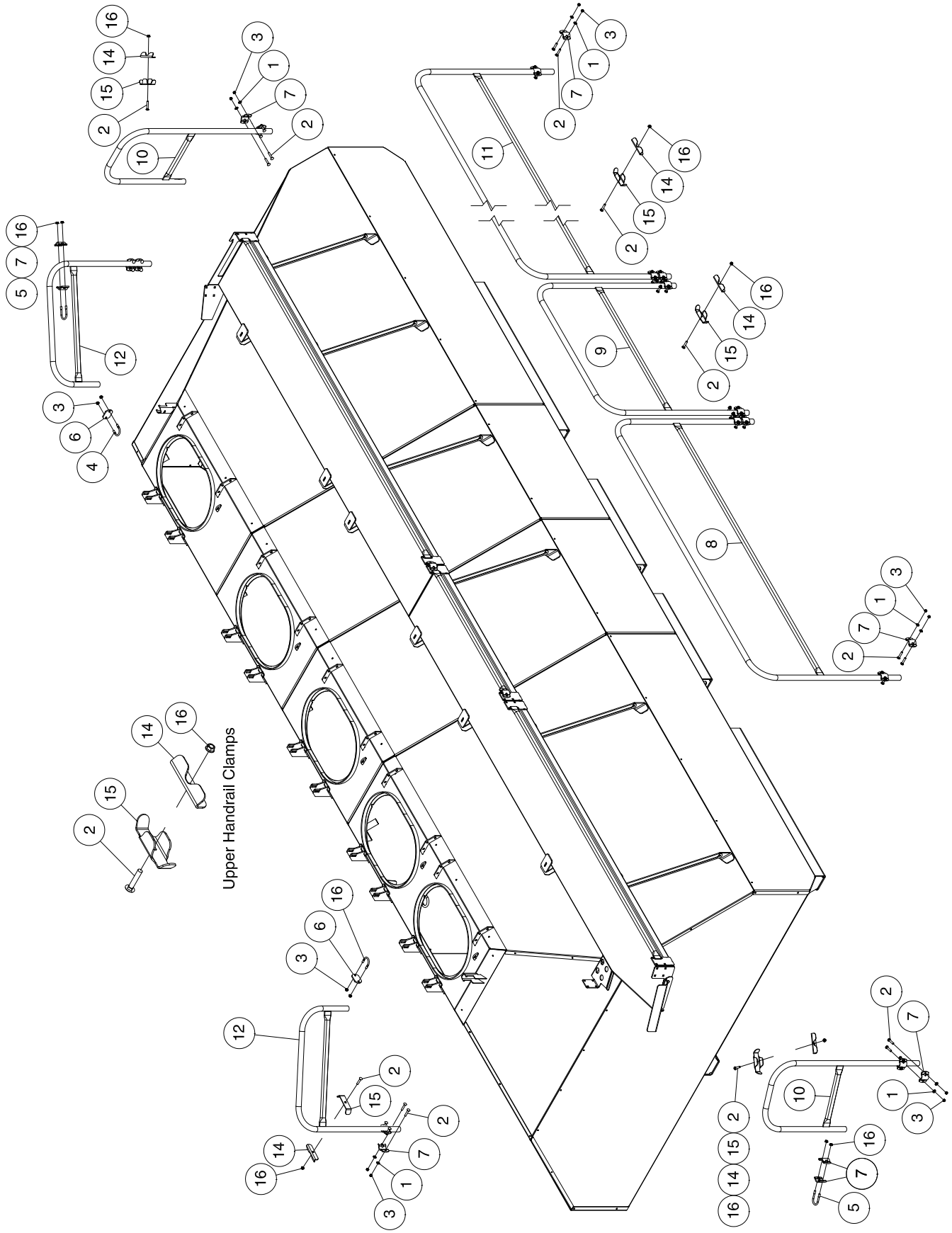
Upper Handrail Clamps

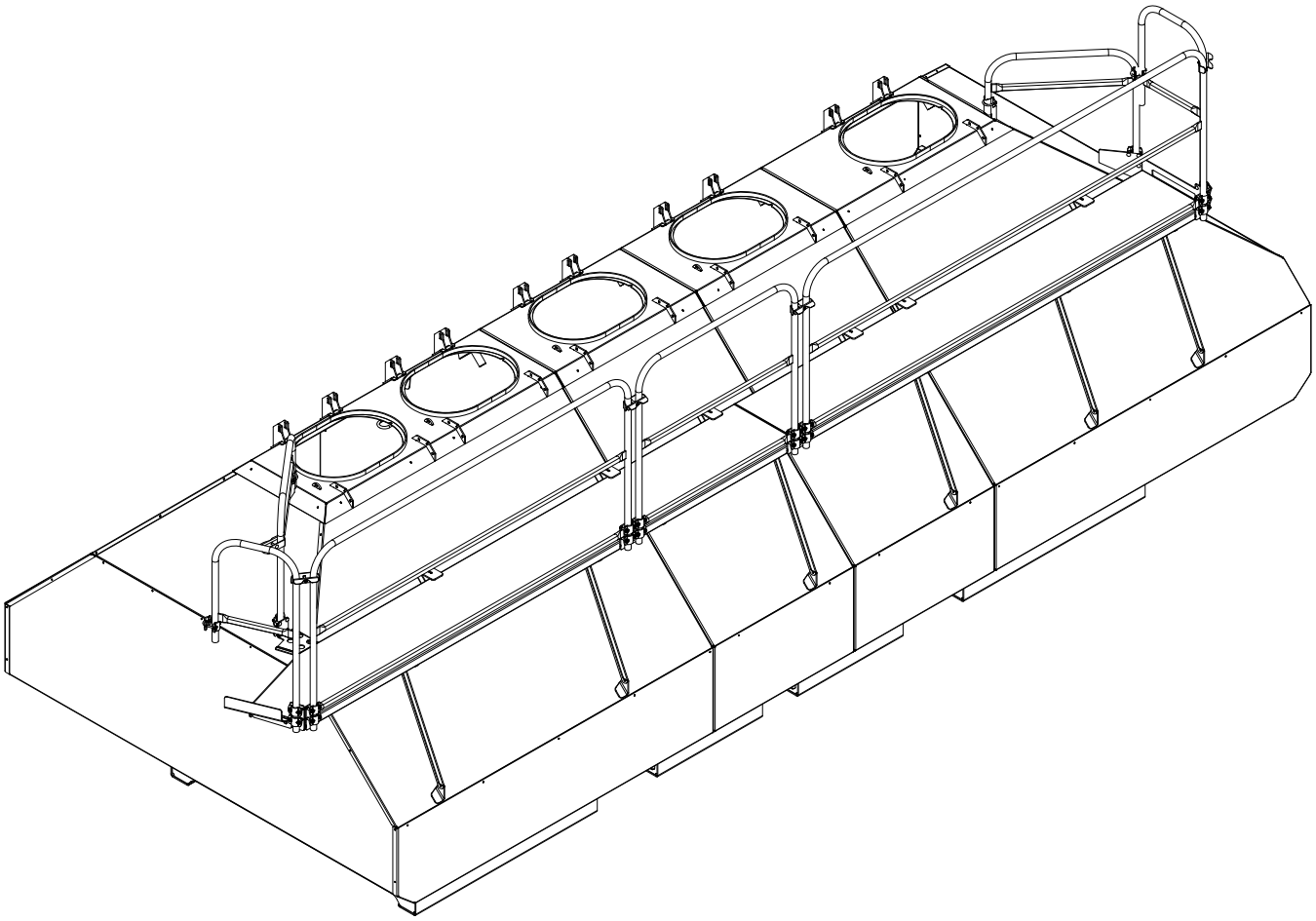

Item	Part No.	Description	Qty
1	D-5489	Washer - 13/32 ID x 13/16 OD x 16 Ga	40
2	D12821	Carriage Bolt - 3/8 x 2 Lg	45
3	M-3388	Locknut - 3/8 Unitorque	40
4	N37619	U-Bolt - 3/8 X 2 1/8 X 2 1/16 UL	2
5	N37620	U-Bolt - 3/8 x 2 1/8 x 3 UL	2
6	N37621	Lug	2
7	N37622	U-Clamp Plate	24
8	N49245	Handrail - 91 1/16 Lg (Overall)	1
9	N50700	Handrail - 45 13/16 Lg (Overall)	1
10	N50945	Handrail - End - 18 15/16 Lg (Overall)	2
11	N51864	Handrail - Front - 114 11/16 Lg (Overall)	1
12	N51865	Handrail - Top - 31 5/16 Lg (Overall)	2
13	* * * * *		
14	N53175	Plate Clamp - Backing Plate	5
15	N53463	Handrail Clamp - 5 5/8 wide	5
16	S27987	Locknut - 3/8 w/ Flanged Center Lock	13

Notes

Section 3:
Walkway - Handrails Folding

Section Contents

9365 Walkway 3-2
9450 Walkway 3-4
9535 Walkway 3-6
9365 Handrails 3-8
9450 Handrails 3-10
9535 Handrails 3-12
9445 Walkway 3-14
9550 Walkway 3-16
9650 Walkway 3-18
9445 Handrails 3-20
9550 Handrails 3-22
9650 Handrails 3-24
9555 Walkway 3-26
9680 Walkway 3-28
9800 and 91000 Walkway 3-30
9555 Handrails 3-32
9680 Handrails 3-34
9800 and 91000 Handrails 3-36
Handrail Clamp Kit N66665 - Optional 3-38

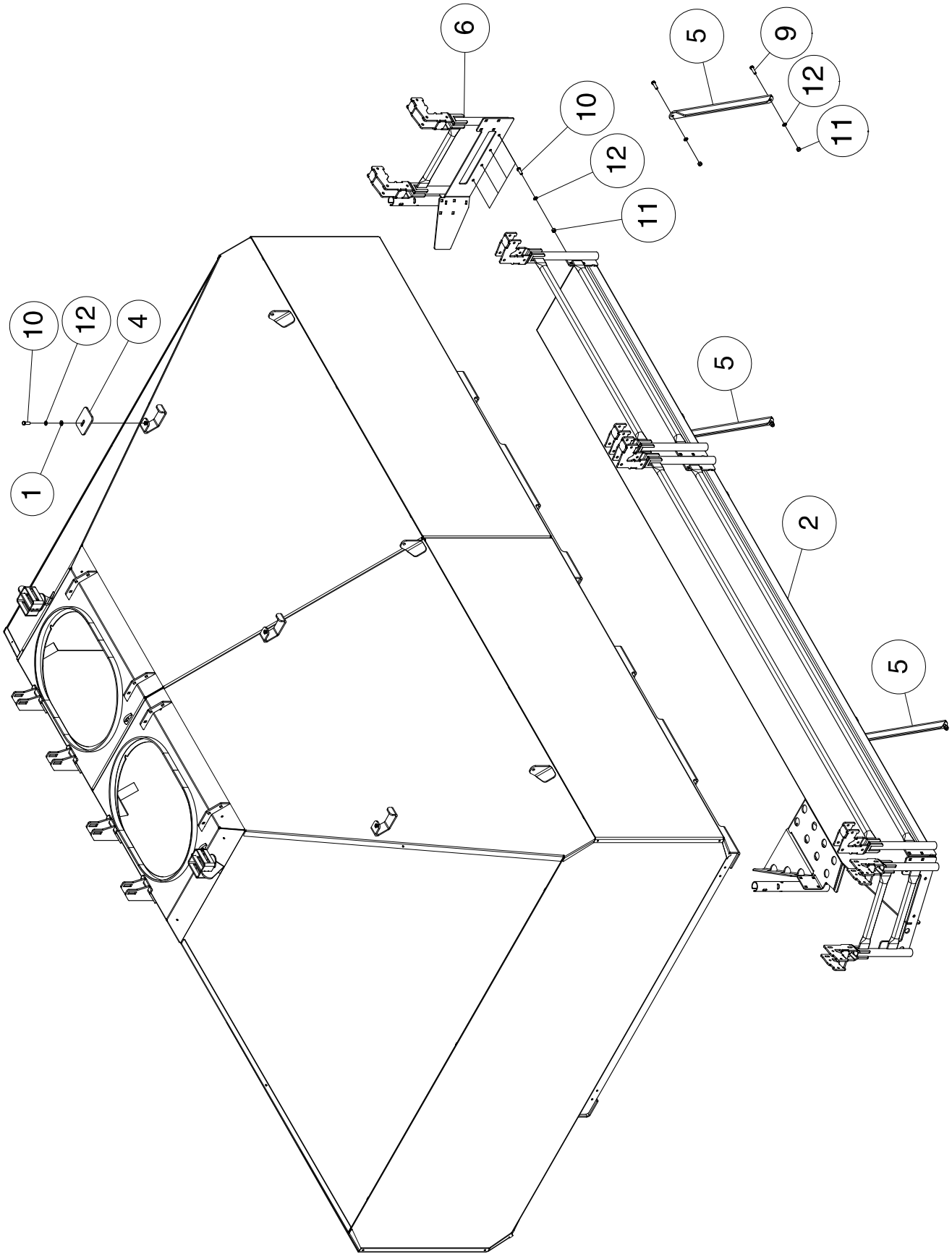
6
5
9
12
11
10
12
11
10
12
4
1
5
2
5

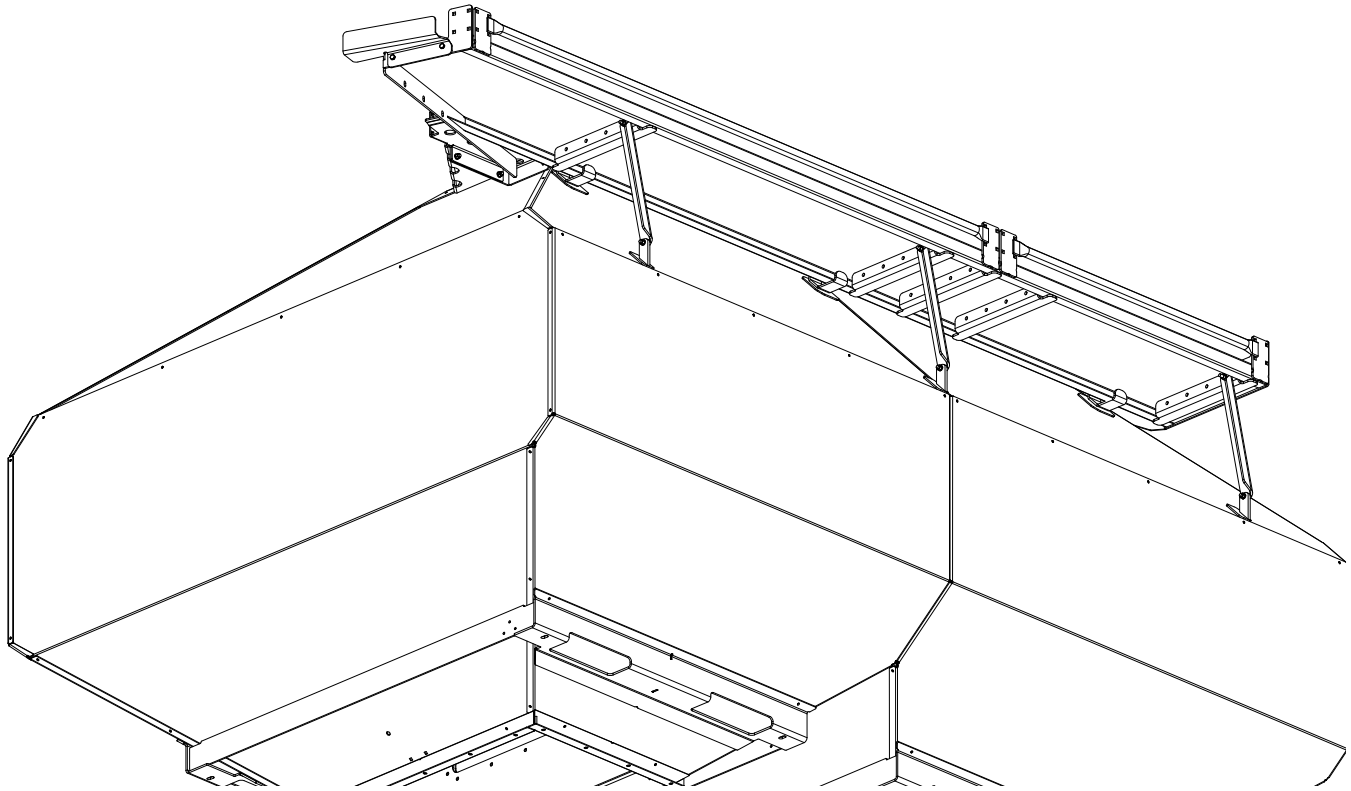

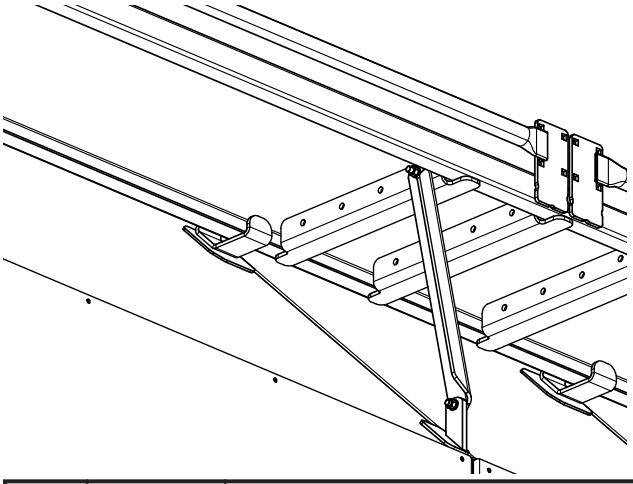

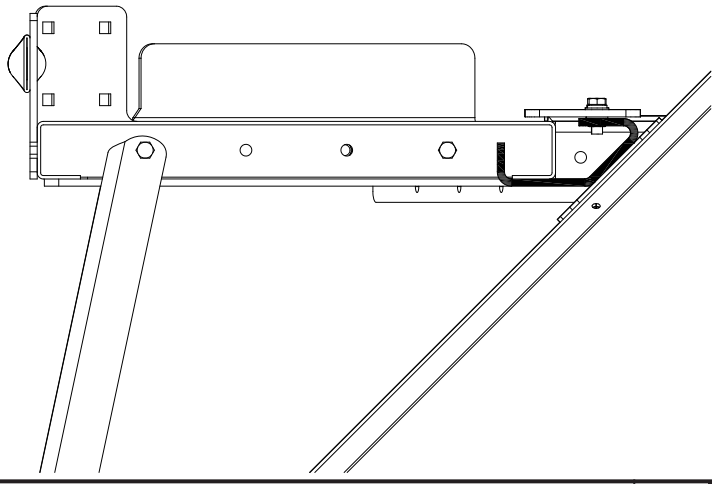

Item	Part No.	Description	Qty
1	D-5489	Washer - 13/32 ID x 13/16 OD x 16 Ga	3
2	N64820	Walkway - Main - 144 7/16 Lg with 8 hole plate and 3 hole plate	1
3	* * * * *		
4	N51238	Plate - Clamp	3
5	N50866	Bracket - Walkway Support - 18 hole centers	3
6	N64801	Plate - Front Kick	1
7	N64811	Plate - Brace	1
8	P7C616	Carriage Bolt - 3/8 x 1 Lg	2
9	W-187	Hex Bolt - 3/8 x 1 1/4 Lg	6
10	W-475	Hex Bolt - 3/8 x 1 Lg	7
11	W-514	Hex Nut - 3/8	10
12	W-523	Lockwasher - 3/8	13
13	S27987	Lock Nut - 3/8 Flanged Center Lock	2

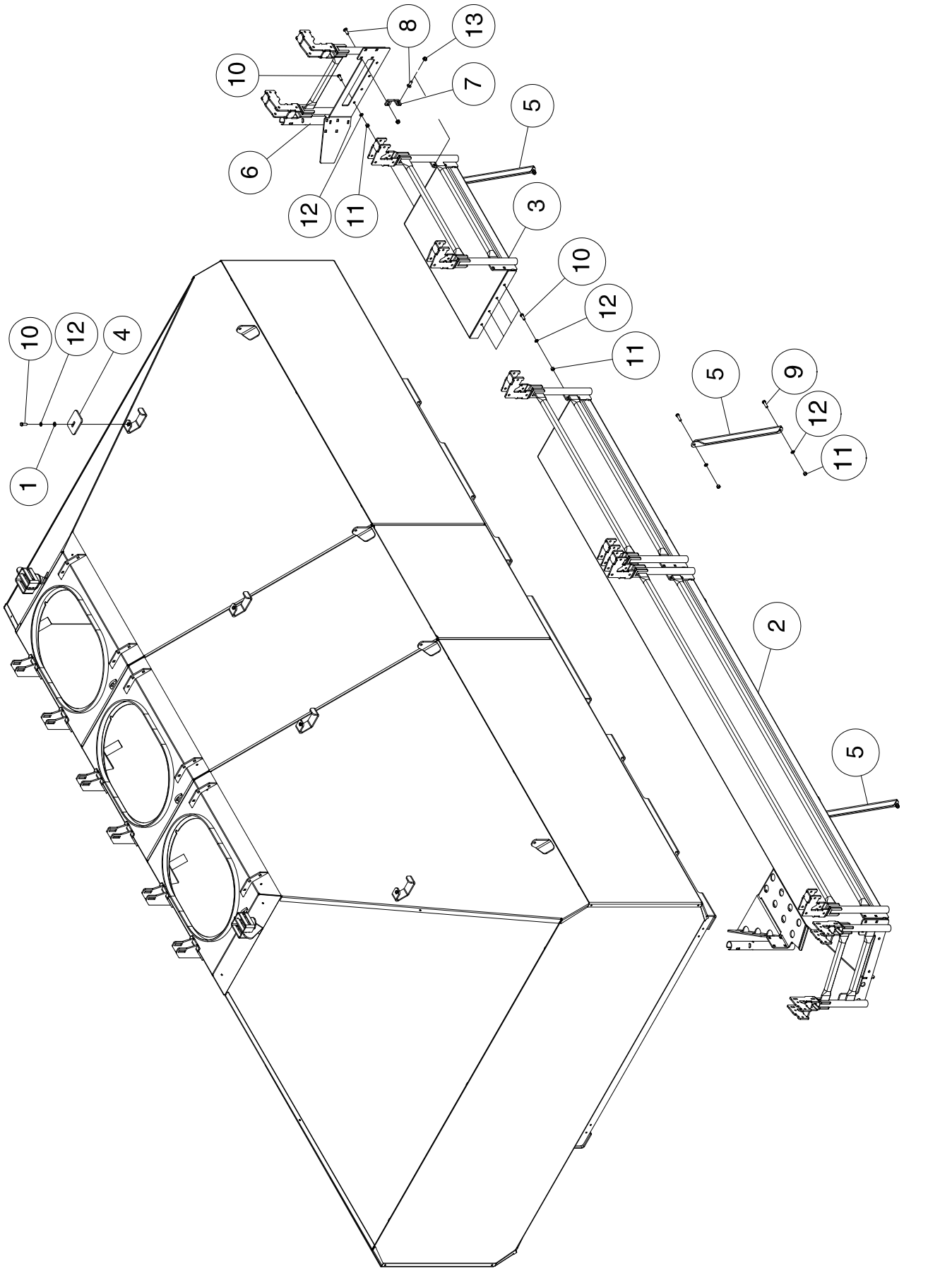
8
13
10
7
5
6
12
11
3
10
12
11
10
12
4
1
5
9
12
11
2
5

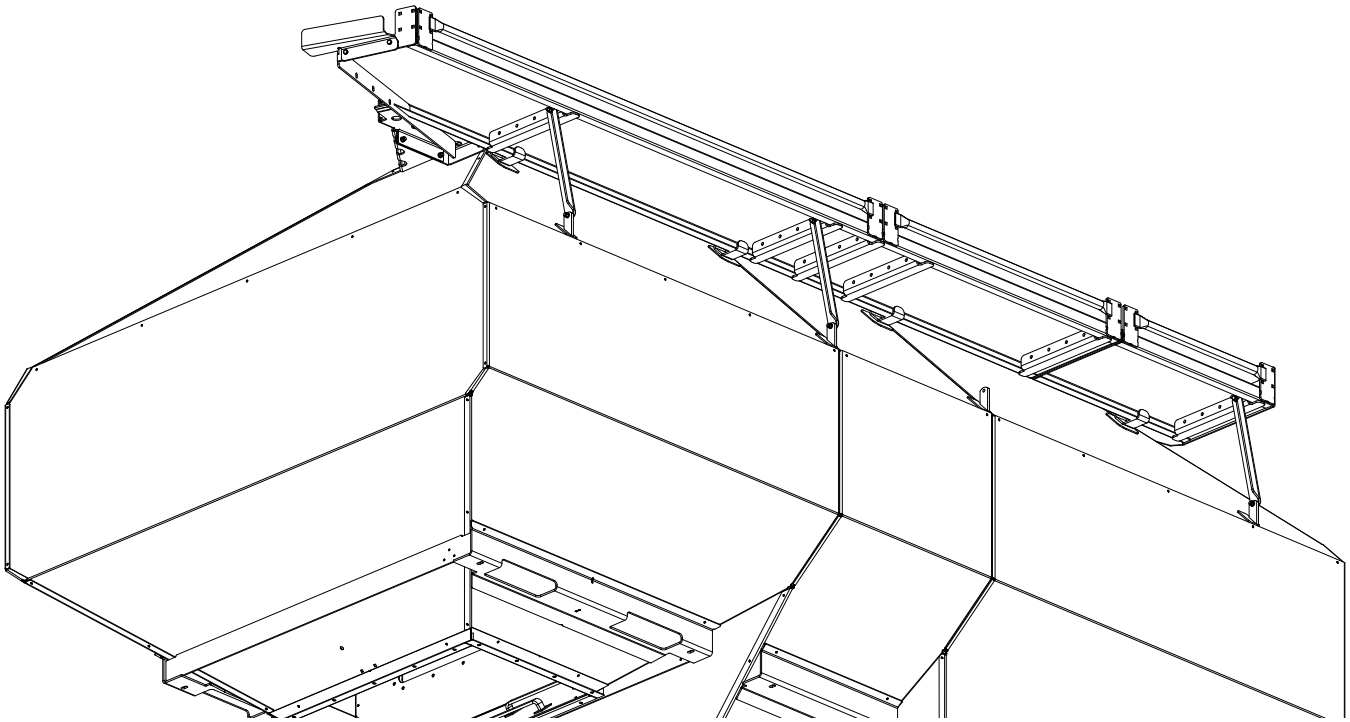

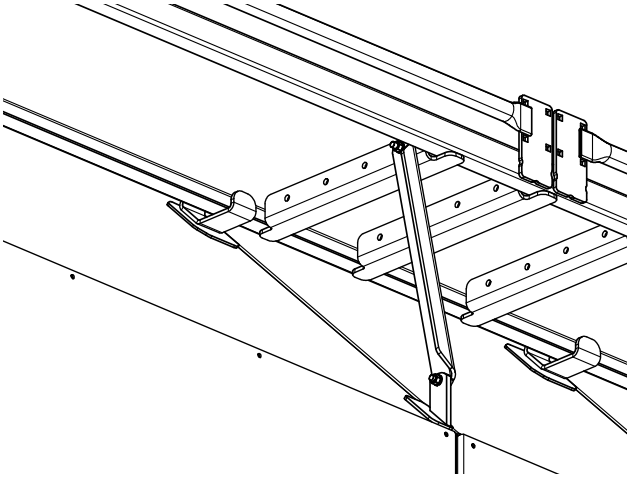

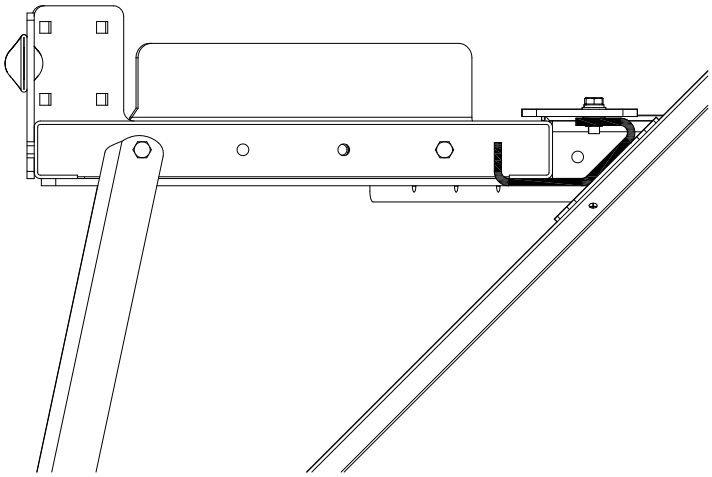

Item	Part No.	Description	Qty
1	D-5489	Washer - 13/32 ID x 13/16 OD x 16 Ga	4
2	N64820	Walkway - Main - 144 7/16 Lg with 8 hole plate and 3 hole plate	1
3	N64823	Walkway Addition - 26 3/4 Lg	1
4	N51238	Plate - Clamp	4
5	N50866	Bracket - Walkway Support - 18 hole centers	3
6	N64801	Plate - Front Kick	1
7	N64811	Plate - Brace	1
8	P7C616	Carriage Bolt - 3/8 x 1 Lg	2
9	W-187	Hex Bolt - 3/8 x 1 1/4 Lg.	6
10	W-475	Hex Bolt - 3/8 x 1 Lg.	12
11	W-514	Hex Nut - 3/8	14
12	W-523	Lockwasher - 3/8	18
13	S27987	Lock Nut - 3/8 Flanged Center Lock	2

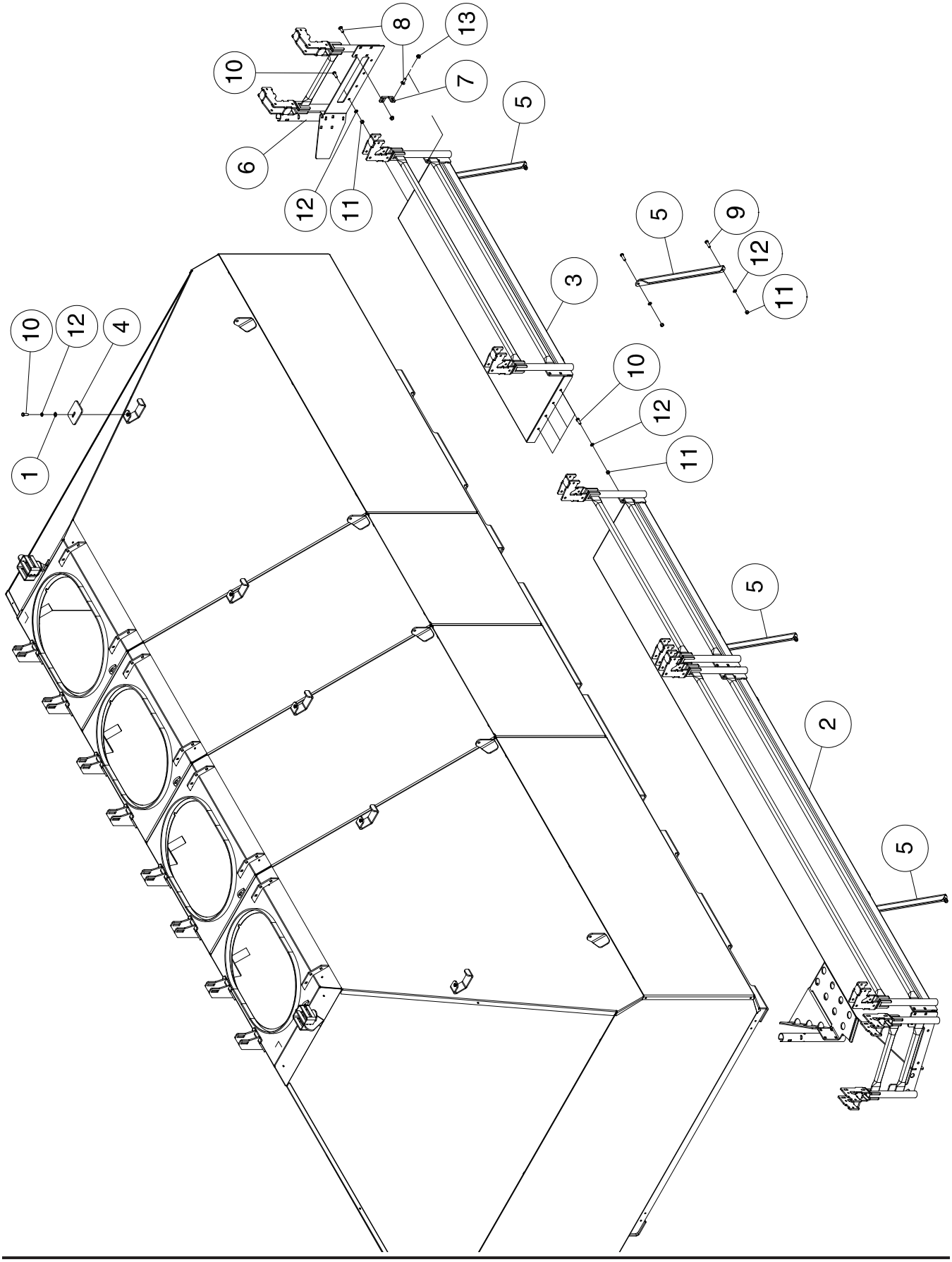
8
13
10
7
5
6
12
11
5
9
12
11
3
10
12
11
10
12
4
1
5
2
5

Tanks & Handrails -9535 Walkway

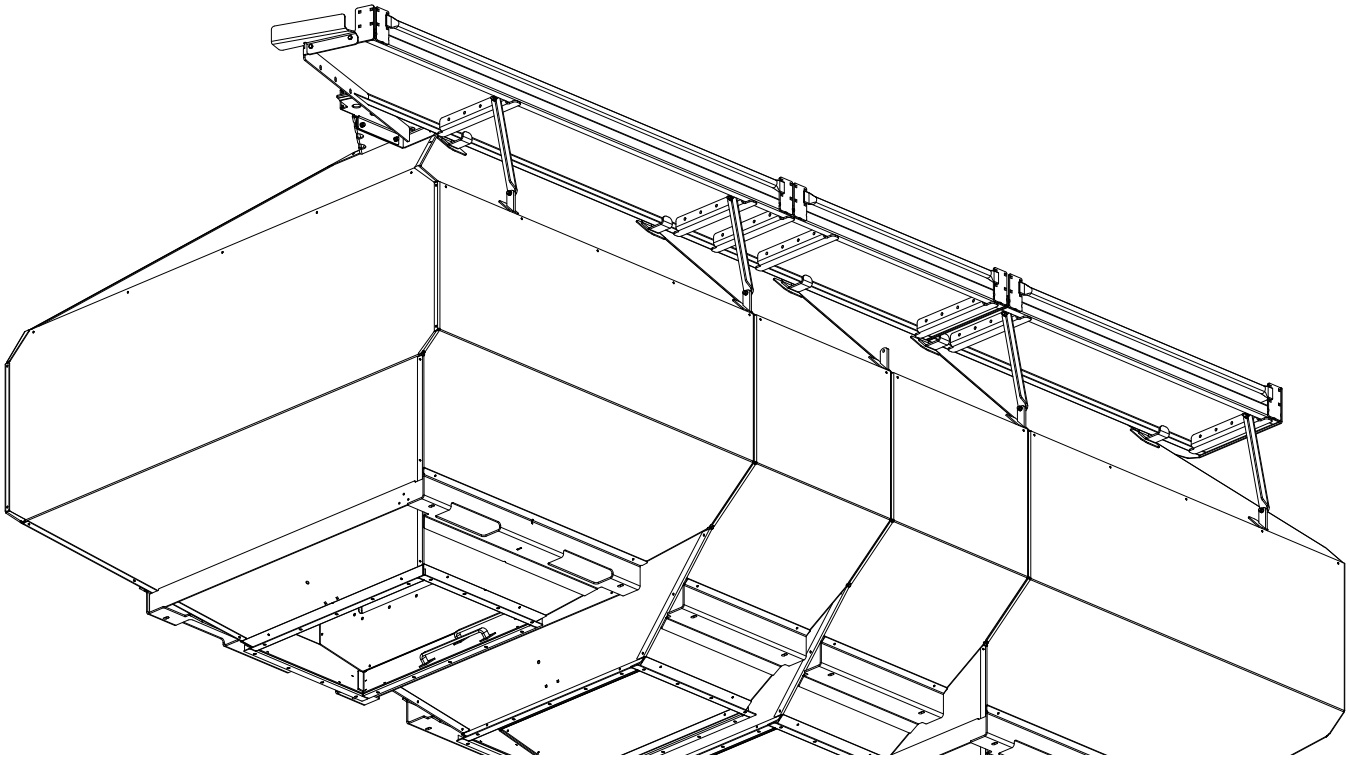

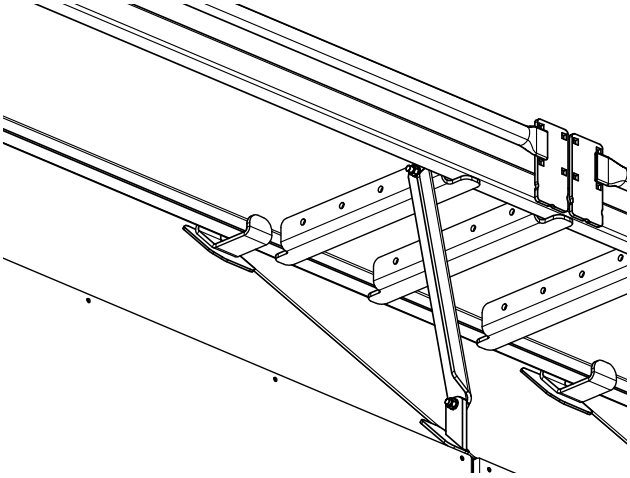

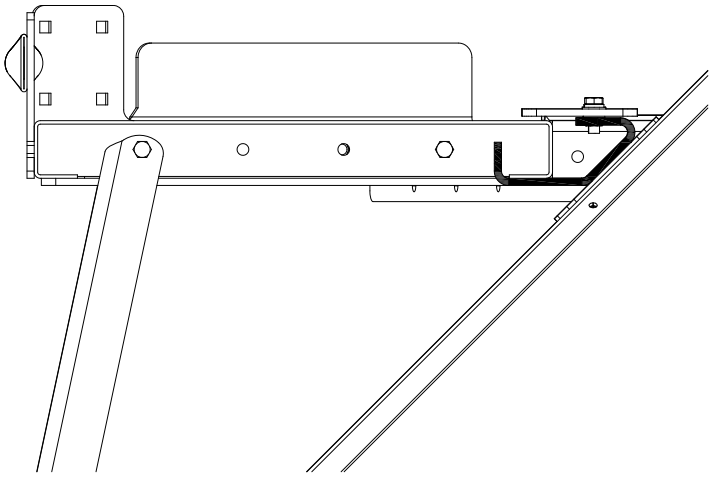

Item	Part No.	Description	Qty
1	D-5489	Washer - 13/32 ID x 13/16 OD x 16 Ga	5
2	N64820	Walkway - Main - 144 7/16 Lg with 8 hole plate and 3 hole plate	1
3	N64824	Walkway Addition - 60 11/16 Lg	1
4	N51238	Plate - Clamp	5
5	N50866	Bracket - Walkway Support - 18 hole centers	4
6	N64801	Plate - Front Kick	1
7	N64811	Plate - Brace	1
8	P7C616	Carriage Bolt - 3/8 x 1 Lg	2
9	W-187	Hex Bolt - 3/8 x 1 1/4 Lg.	8
10	W-475	Hex Bolt - 3/8 x 1 Lg.	13
11	W-514	Hex Nut - 3/8	16
12	W-523	Lockwasher - 3/8	21
13	S27987	Lock Nut - 3/8 Flanged Center Lock	2

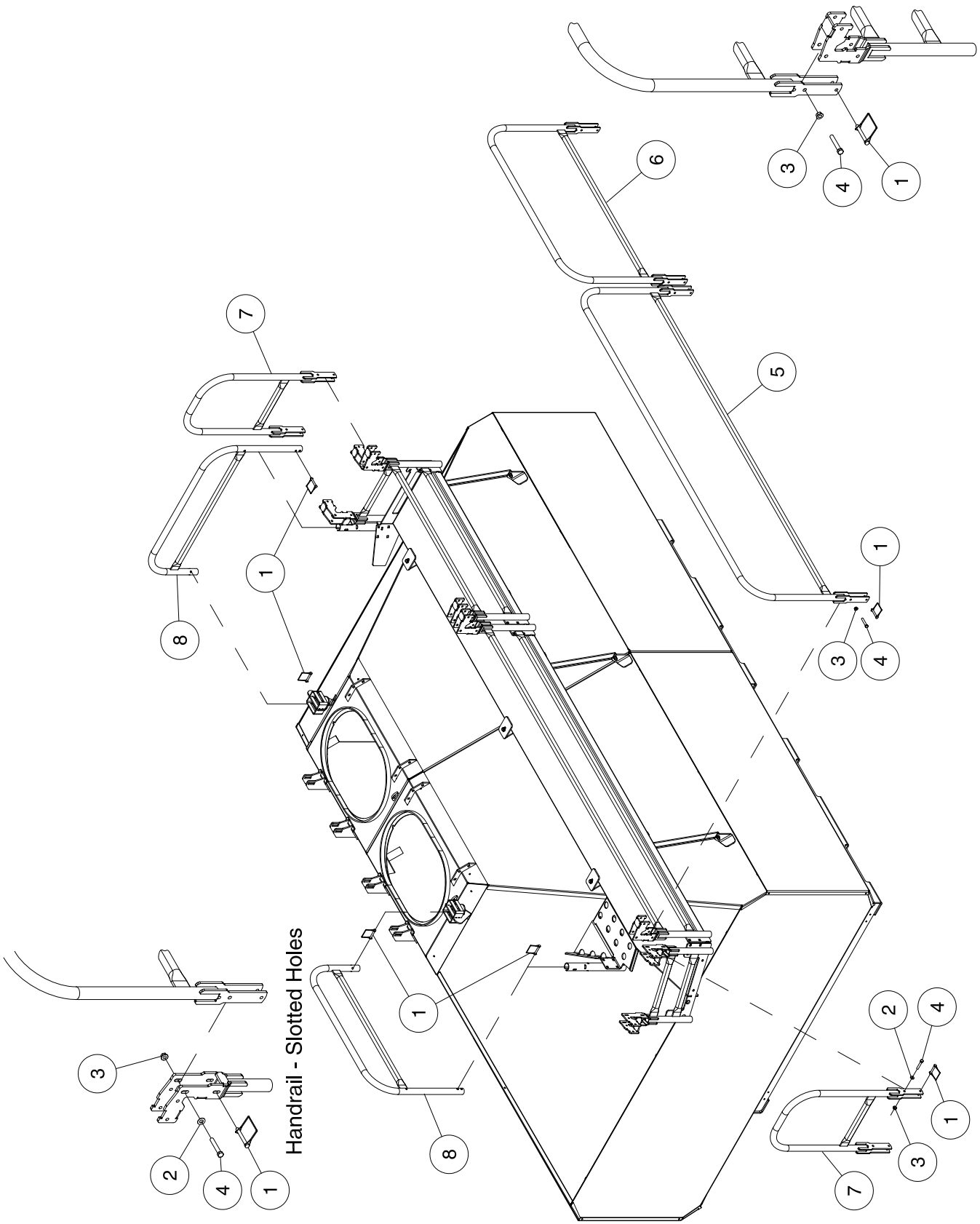
Handrail - Slotted Holes

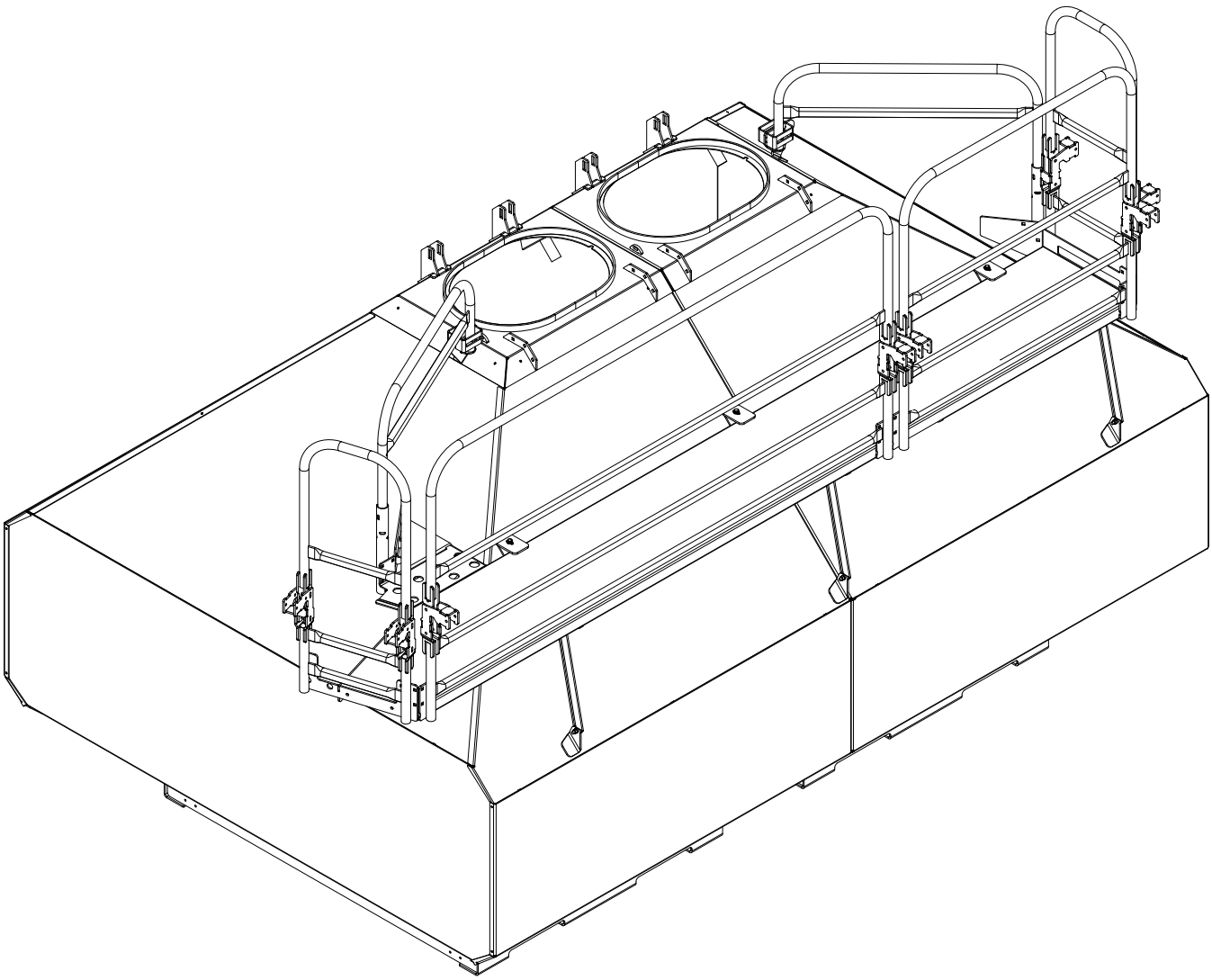

Item	Part No.	Description	Qty
1	C13447	Pin-Quick - 5/16 Dia 2 3/8 UL	12
2	D-5489	Washer - 13/32 ID x 13/16 OD x 16 Ga	2
3	S27987	Locknut - 3/8 w/ Flanged Center Lock	8
4	W-480	Bolt - 3/8 x 2 1/2 Lg	8
5	N64830	Handrail - 91 1/16 Lg (Overall)	1
6	N64831	Handrail - 45 13/16 Lg (Overall)	1
7	N64840	Handrail - End - 17 5/16 Lg (Overall)	2
8	N64850	Handrail - End - 37 5/16 Lg (Overall)	2

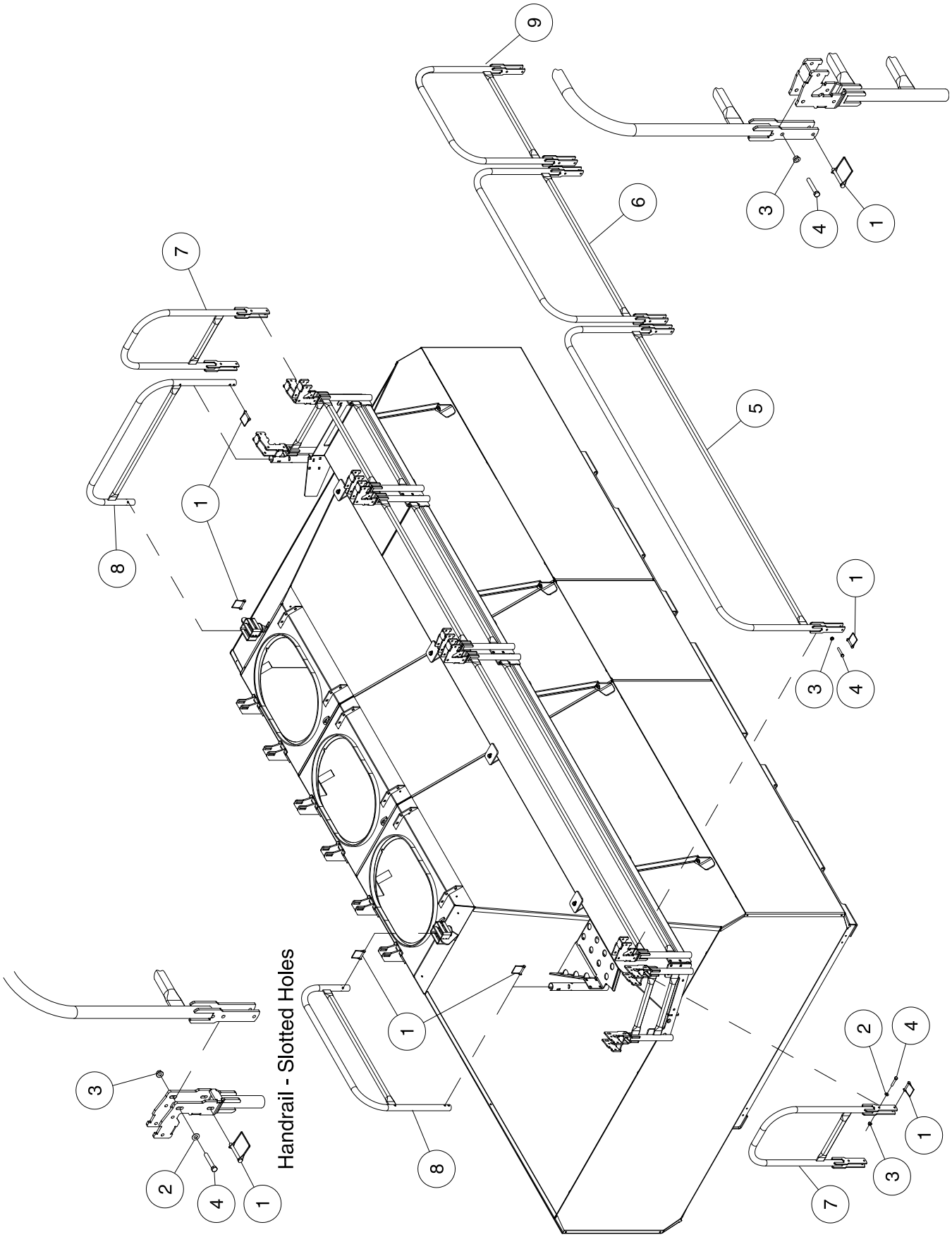
Handrail - Slotted Holes

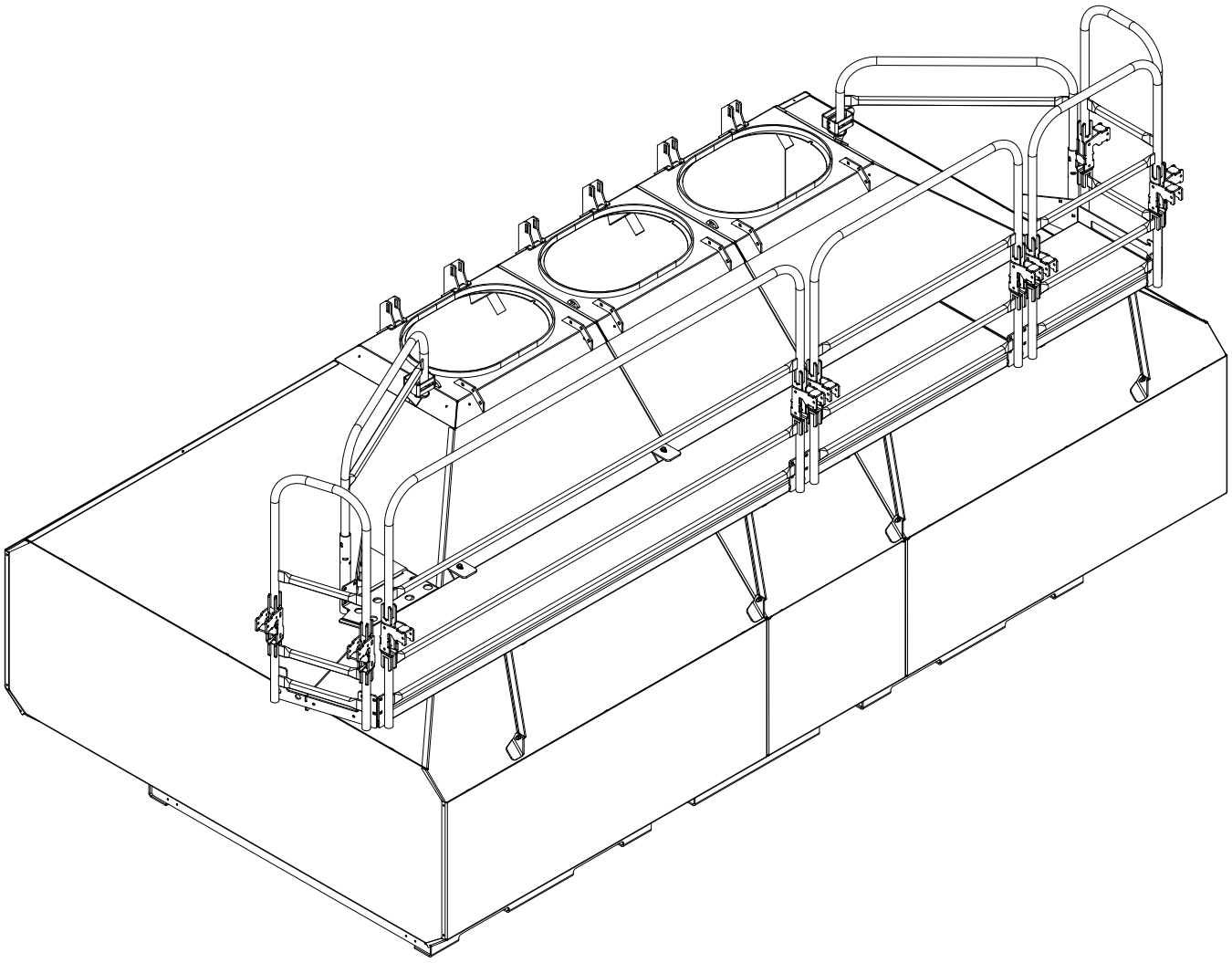

Item	Part No.	Description	Qty
1	C13447	Pin-Quick - 5/16 Dia 2 3/8 UL	14
2	D-5489	Washer - 13/32 ID x 13/16 OD x 16 Ga	2
3	S27987	Locknut - 3/8 w/ Flanged Center Lock	10
4	W-480	Bolt - 3/8 x 2 1/2 Lg	10
5	N64830	Handrail - 91 1/16 Lg (Overall)	1
6	N64831	Handrail - 45 13/16 Lg (Overall)	1
7	N64840	Handrail - End - 17 5/16 Lg (Overall)	2
8	N64850	Handrail - End - 37 5/16 Lg (Overall)	2
9	N64853	Handrail - 28 13/16 Lg (Overall)	1

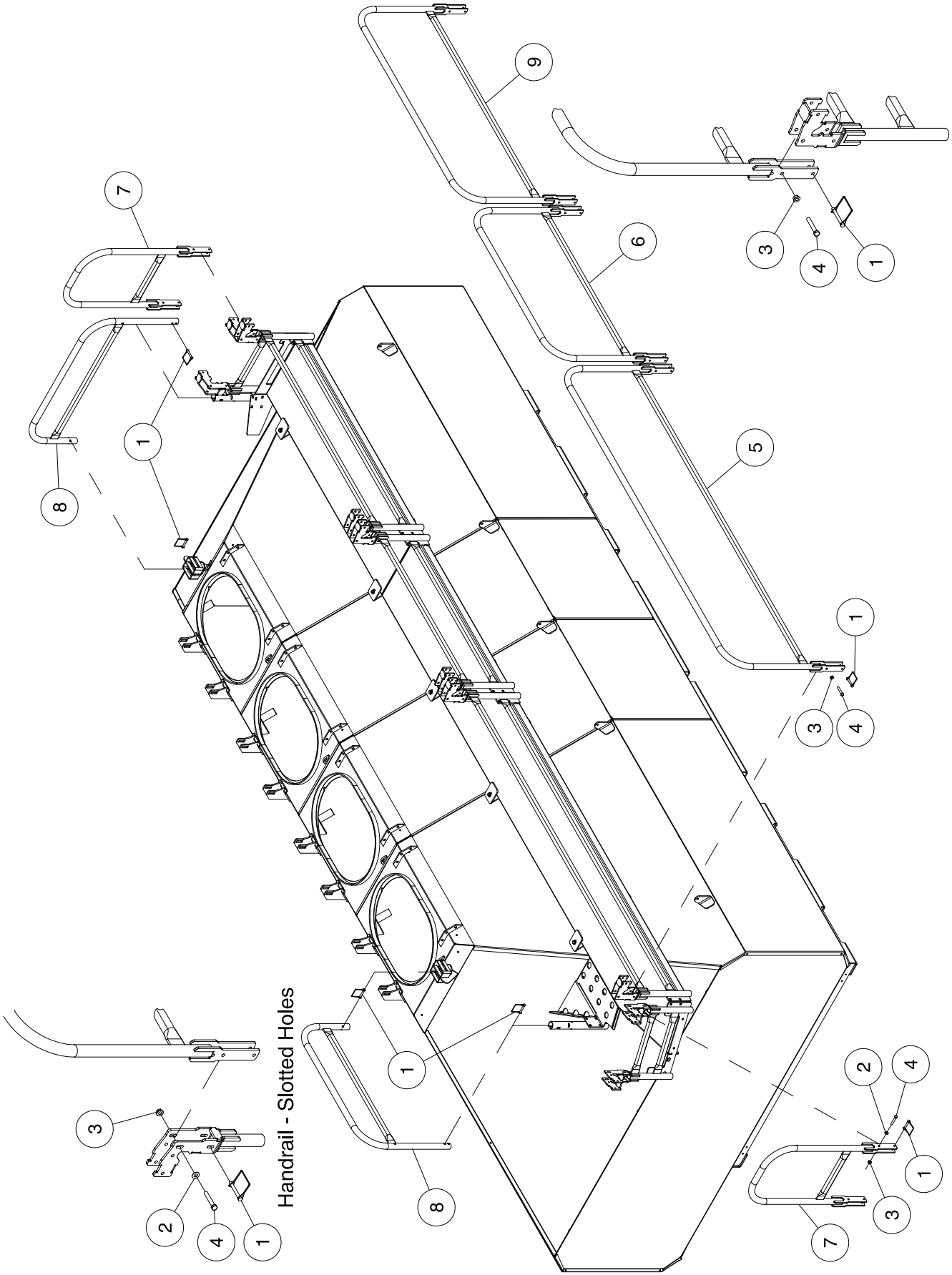
Handrail - Slotted Holes

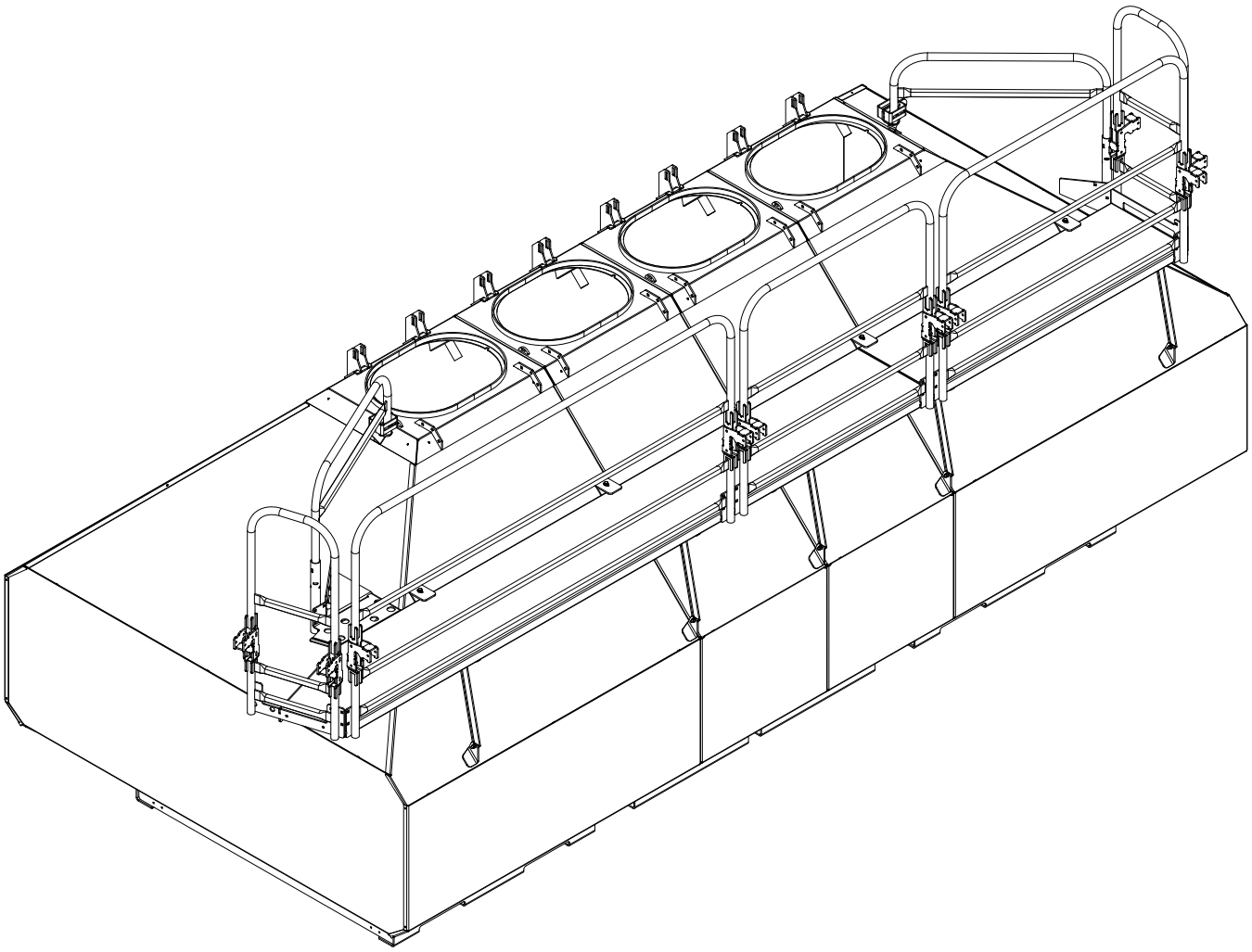

Item	Part No.	Description	Qty
1	C13447	Pin-Quick - 5/16 Dia 2 3/8 UL	14
2	D-5489	Washer - 13/32 ID x 13/16 OD x 16 Ga	2
3	S27987	Locknut - 3/8 w/ Flanged Center Lock	10
4	W-480	Bolt - 3/8 x 2 1/2 Lg	10
5	N64830	Handrail - 91 1/16 Lg (Overall)	1
6	N64831	Handrail - 45 13/16 Lg (Overall)	1
7	N64840	Handrail - End - 17 5/16 Lg (Overall)	2
8	N64850	Handrail - End - 37 5/16 Lg (Overall)	2
9	N64854	Handrail - 58 7/8 Lg (Overall)	1

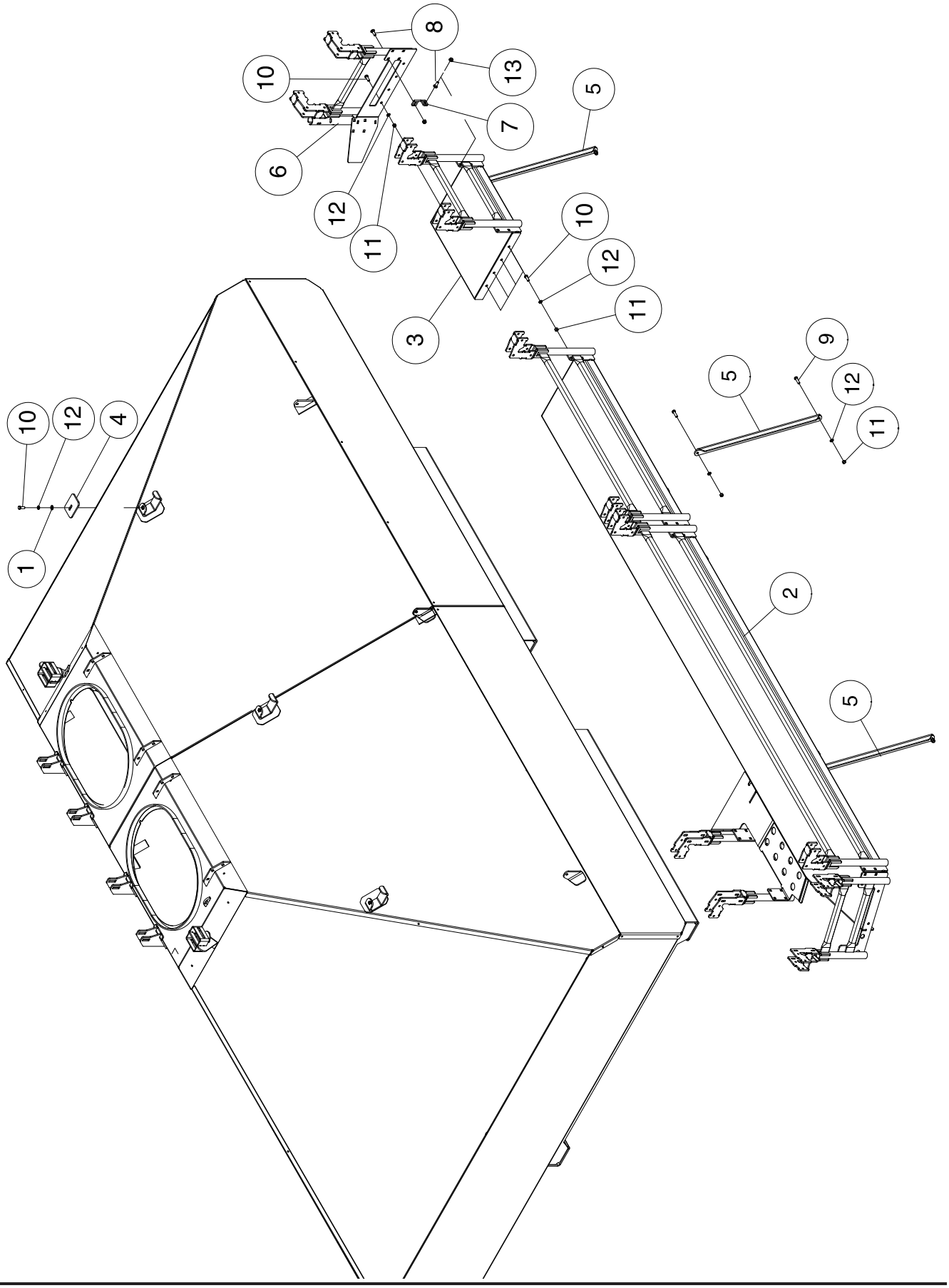
8
13
10
5
7
6
12
11
10
12
11
3
9
5
12
11
10
12
4
1
2
5

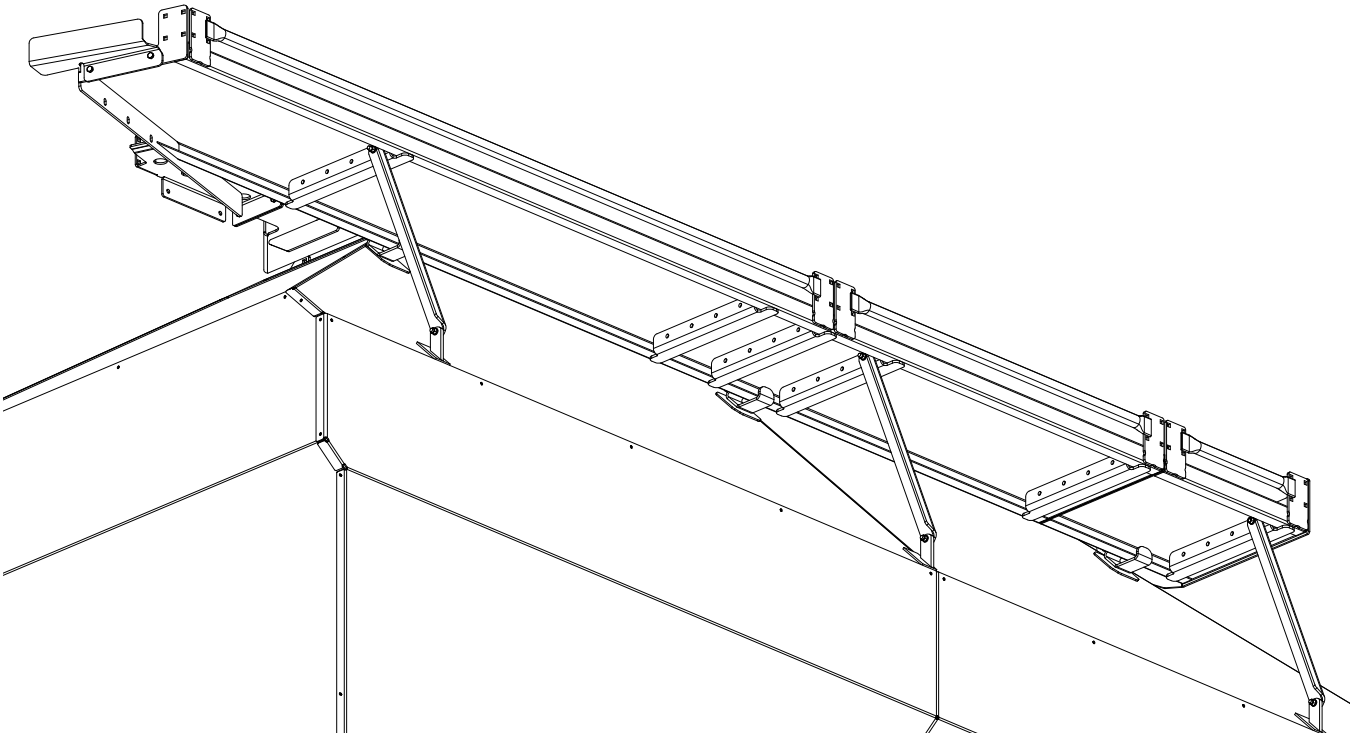

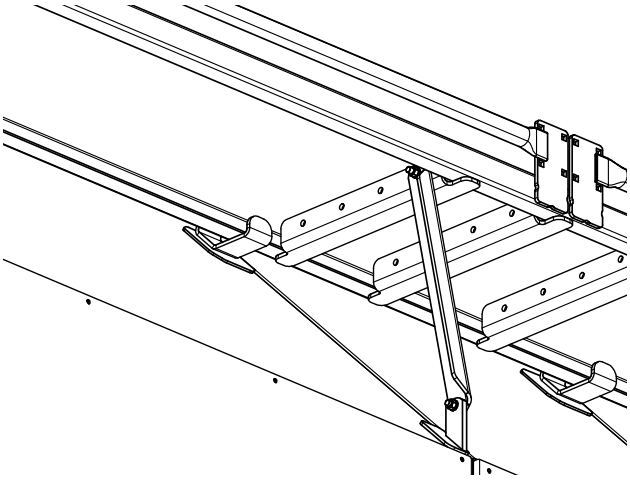

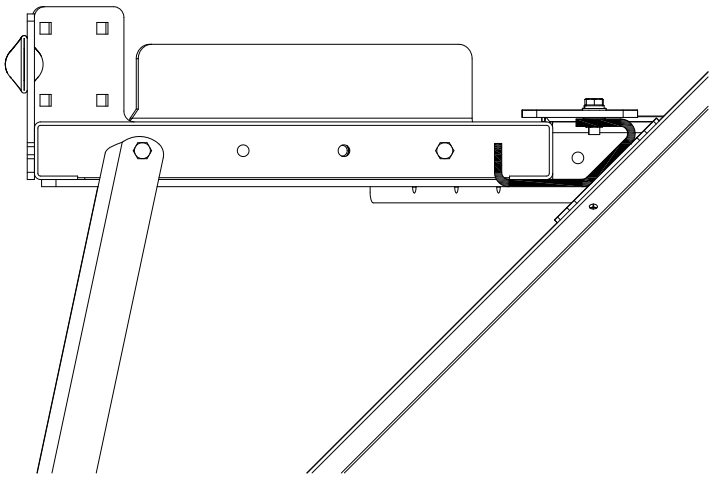

Item	Part No.	Description	Qty
1	D-5489	Washer - 13/32 ID x 13/16 OD x 16 Ga	3
2	N64810	Walkway - Main - 144 3/8 Lg with 8 hole plate	1
3	N64812	Walkway Addition - 20 3/4 Lg	1
4	N51238	Plate - Clamp	3
5	N50620	Bracket - Walkway Support - 25 3/8 hole centers	3
6	N64801	Plate - Front Kick	1
7	N64811	Plate - Brace	1
8	P7C616	Carriage Bolt - 3/8 x 1 Lg	2
9	W-187	Hex Bolt - 3/8 x 1 1/4 Lg	6
10	W-475	Hex Bolt - 3/8 x 1 Lg	11
11	W-514	Hex Nut - 3/8	14
12	W-523	Lockwasher - 3/8	17
13	S27987	Lock Nut - 3/8 Flanged Center Lock	2

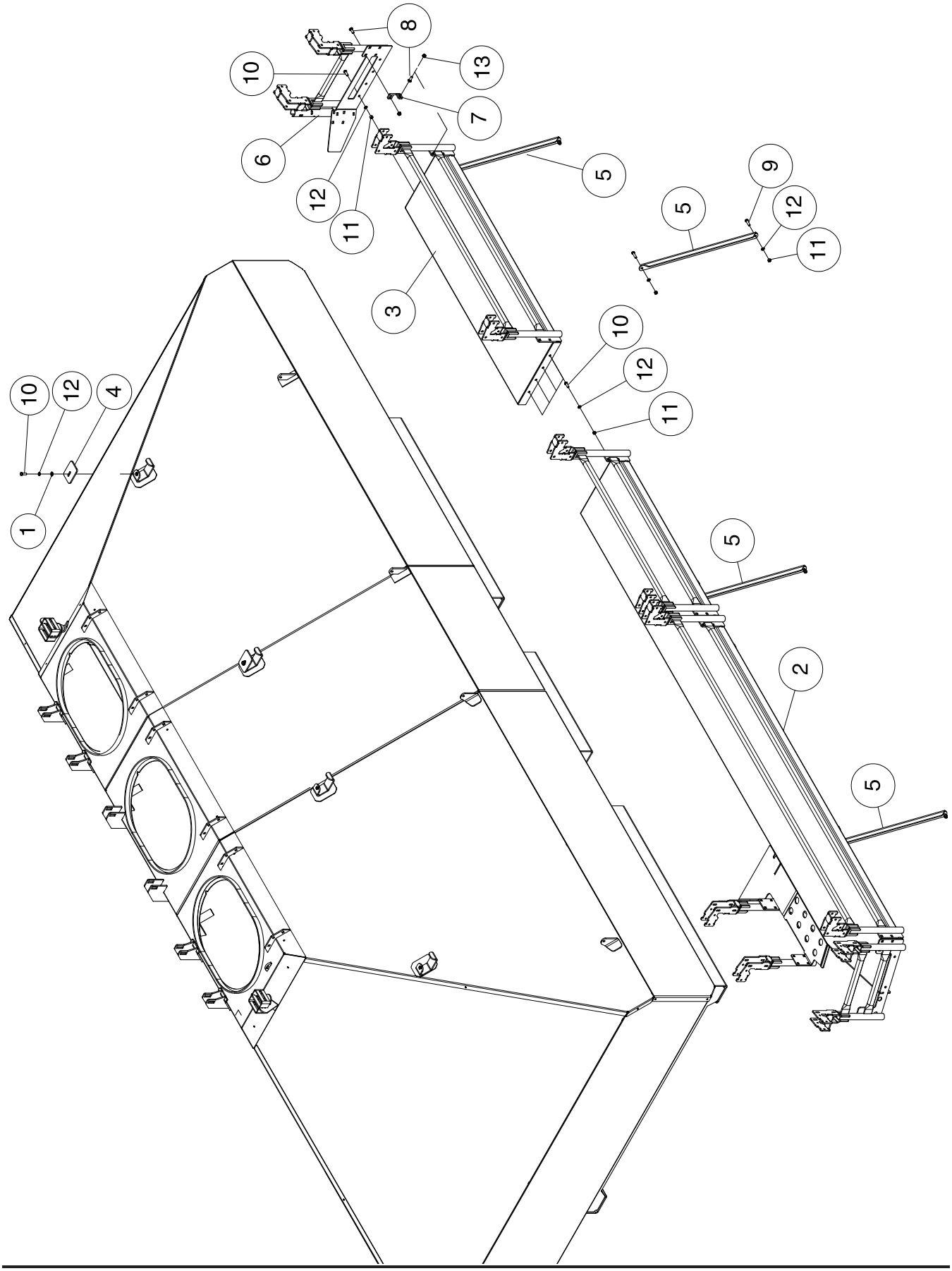
8
13
10
7
6
5
12
11
3
9
5
12
11
10
12
11
10
12
4
1
5
2
5

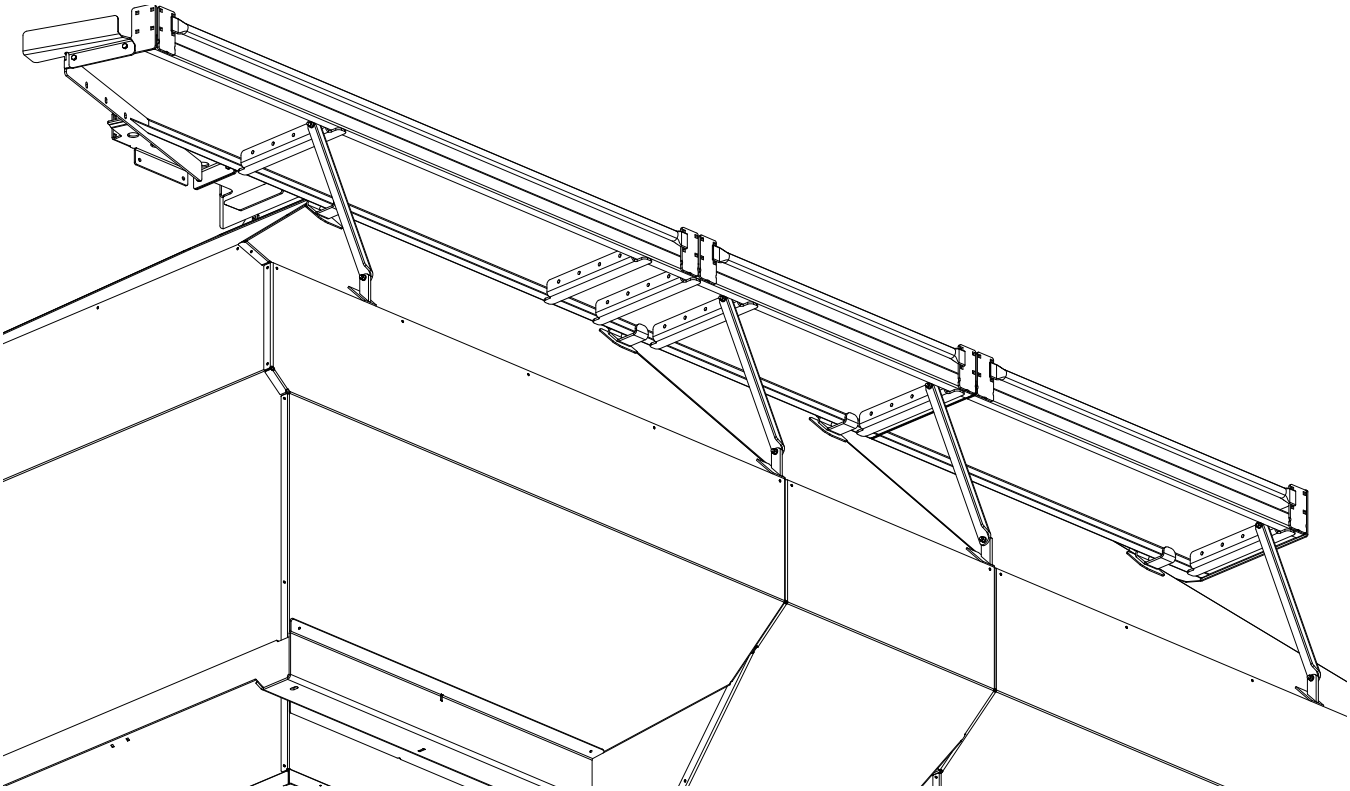

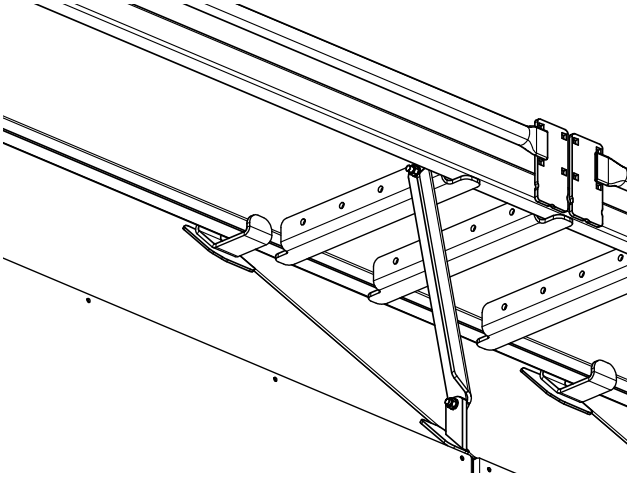

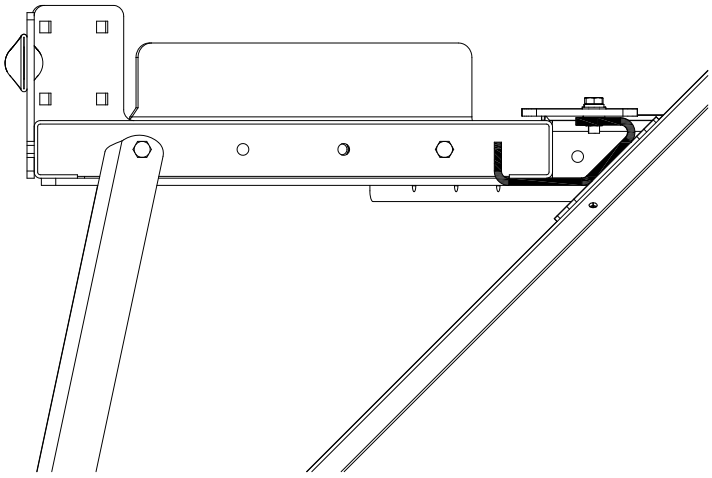

Item	Part No.	Description	Qty
1	D-5489	Washer - 13/32 ID x 13/16 OD x 16 Ga	4
2	N64810	Walkway - Main - 144 3/8 Lg with 8 hole plate	1
3	N64813	Walkway Addition - 56 13/16 Lg	1
4	N51238	Plate - Clamp	4
5	N50620	Bracket - Walkway Support - 25 3/8 hole centers	4
6	N64801	Plate - Front Kick	1
7	N64811	Plate - Brace	1
8	P7C616	Carriage Bolt - 3/8 x 1 Lg	2
9	W-187	Hex Bolt - 3/8 x 1 1/4 Lg	8
10	W-475	Hex Bolt - 3/8 x 1 Lg	12
11	W-514	Hex Nut - 3/8	16
12	W-523	Lockwasher - 3/8	20
13	S27987	Lock Nut - 3/8 Flanged Center Lock	2

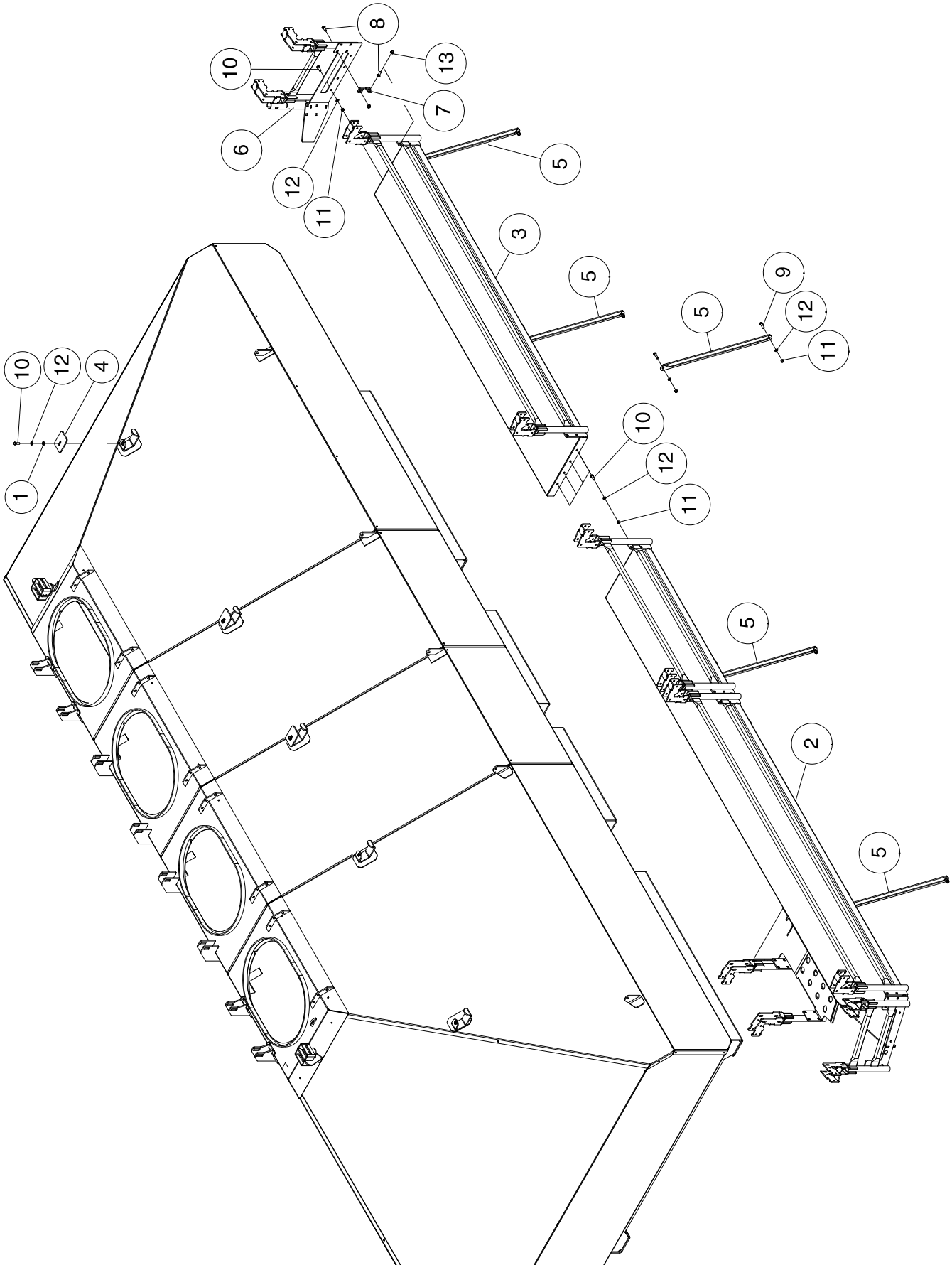
8
13
10
7
6
5
12
11
3
5
9
5
12
11
10
12
4
1
10
12
11
5
2
5

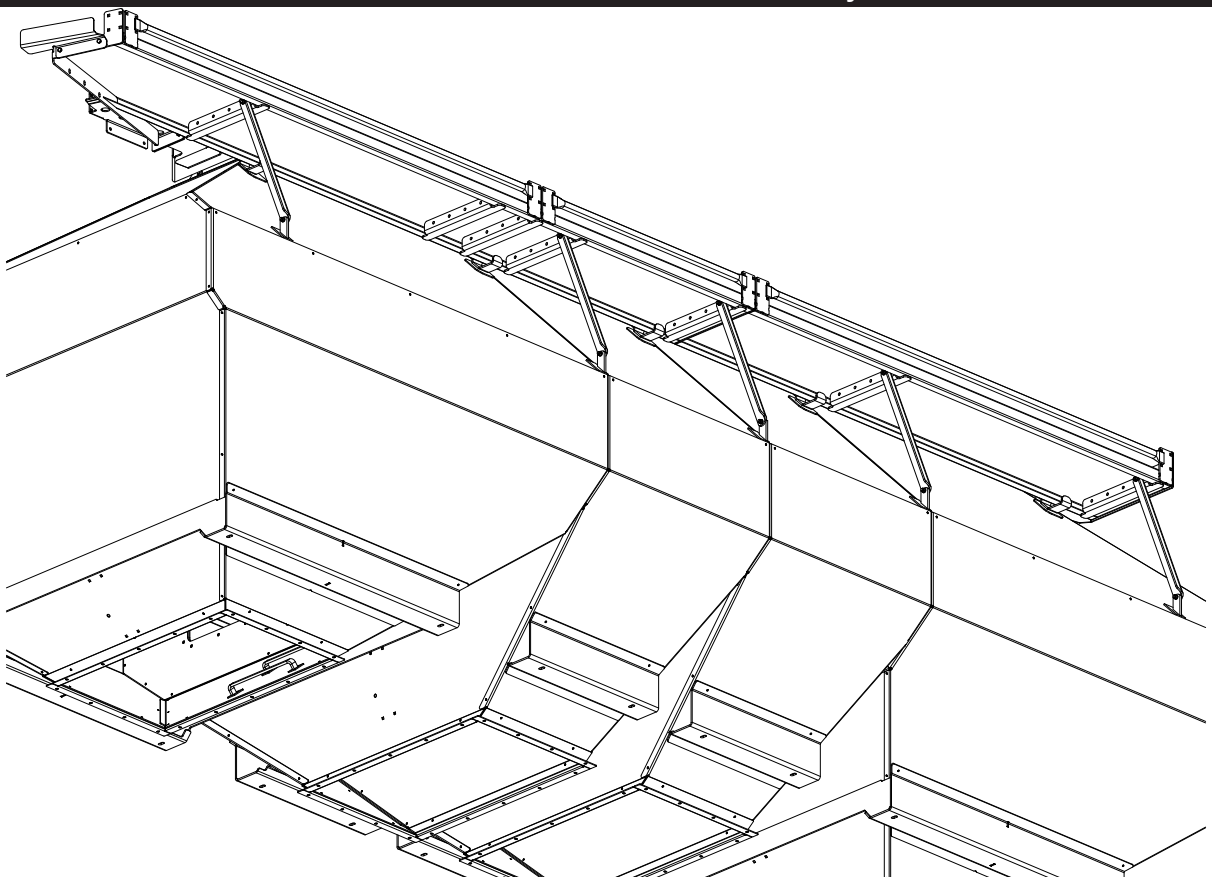

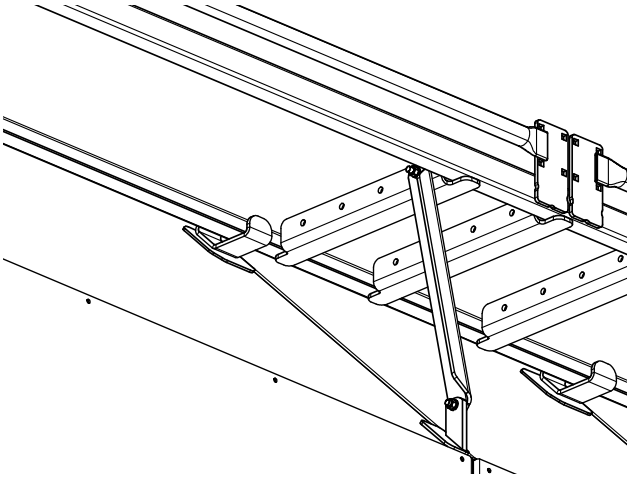

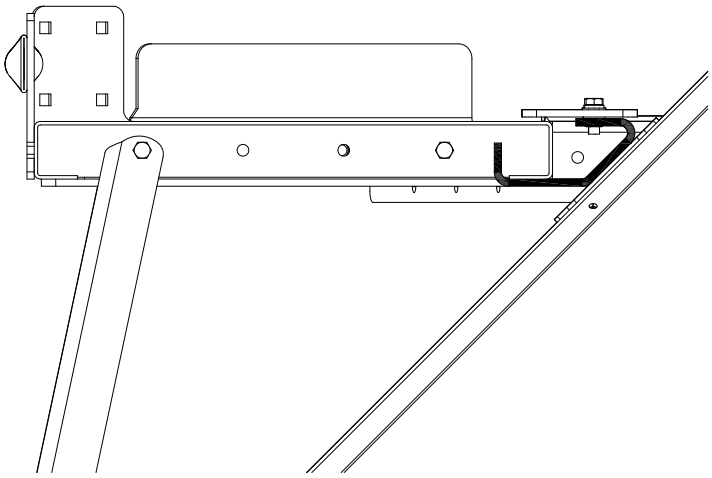

Item	Part No.	Description	Qty
1	D-5489	Washer - 13/32 ID x 13/16 OD x 16 Ga	5
2	N64810	Walkway - Main - 144 3/8 Lg with 8 hole plate	1
3	N64814	Walkway Addition - 92 7/8 Lg	1
4	N51238	Plate - Clamp	5
5	N50620	Bracket - Walkway Support - 25 3/8 hole centers	5
6	N64801	Plate - Front Kick	1
7	N64811	Plate - Brace	1
8	P7C616	Carriage Bolt - 3/8 x 1 Lg	2
9	W-187	Hex Bolt - 3/8 x 1 1/4 Lg.	10
10	W-475	Hex Bolt - 3/8 x 1 Lg.	13
11	W-514	Hex Nut - 3/8	18
12	W-523	Lockwasher - 3/8	23
13	S27987	Lock Nut - 3/8 Flanged Center Lock	2

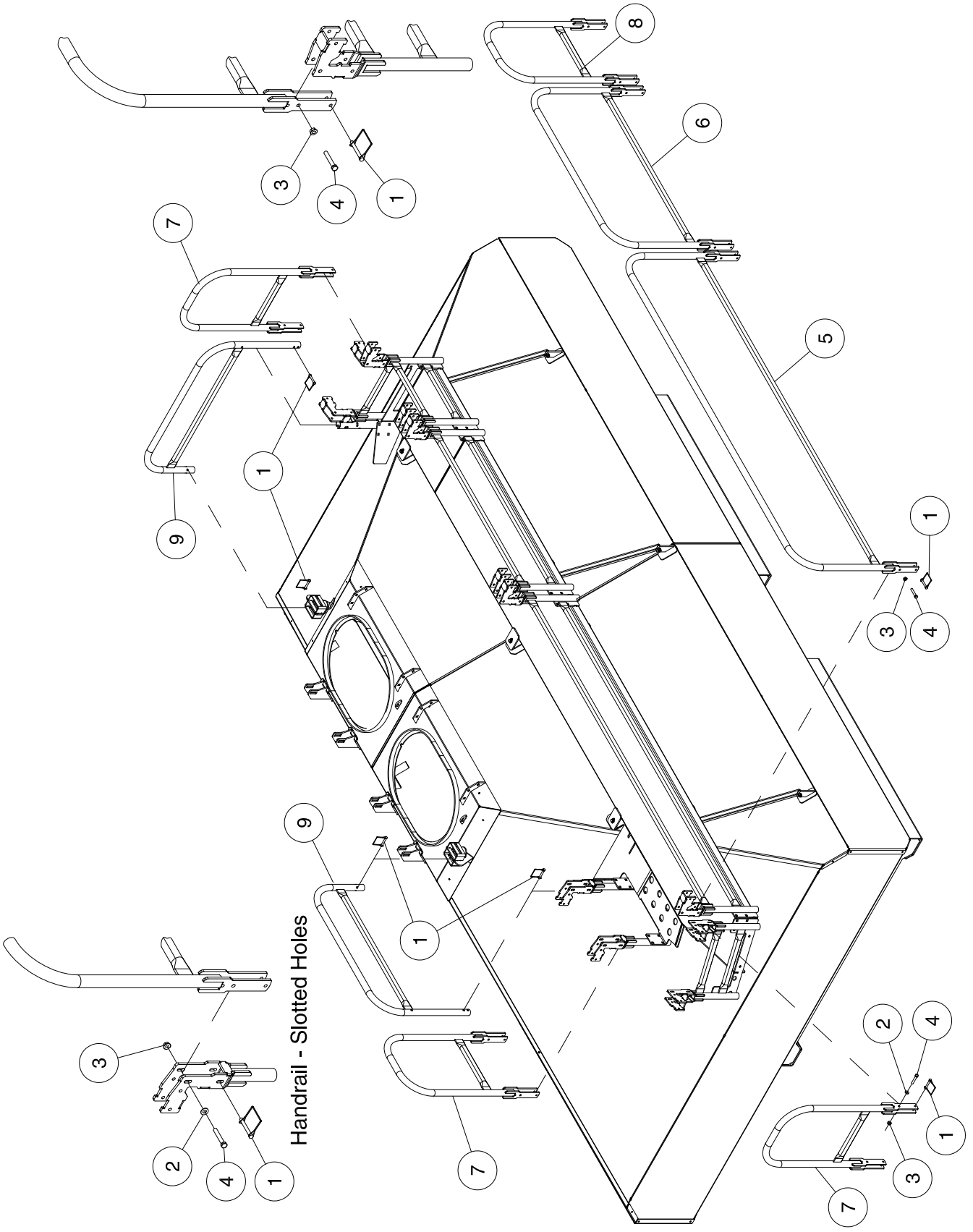
Handrail - Slotted Holes

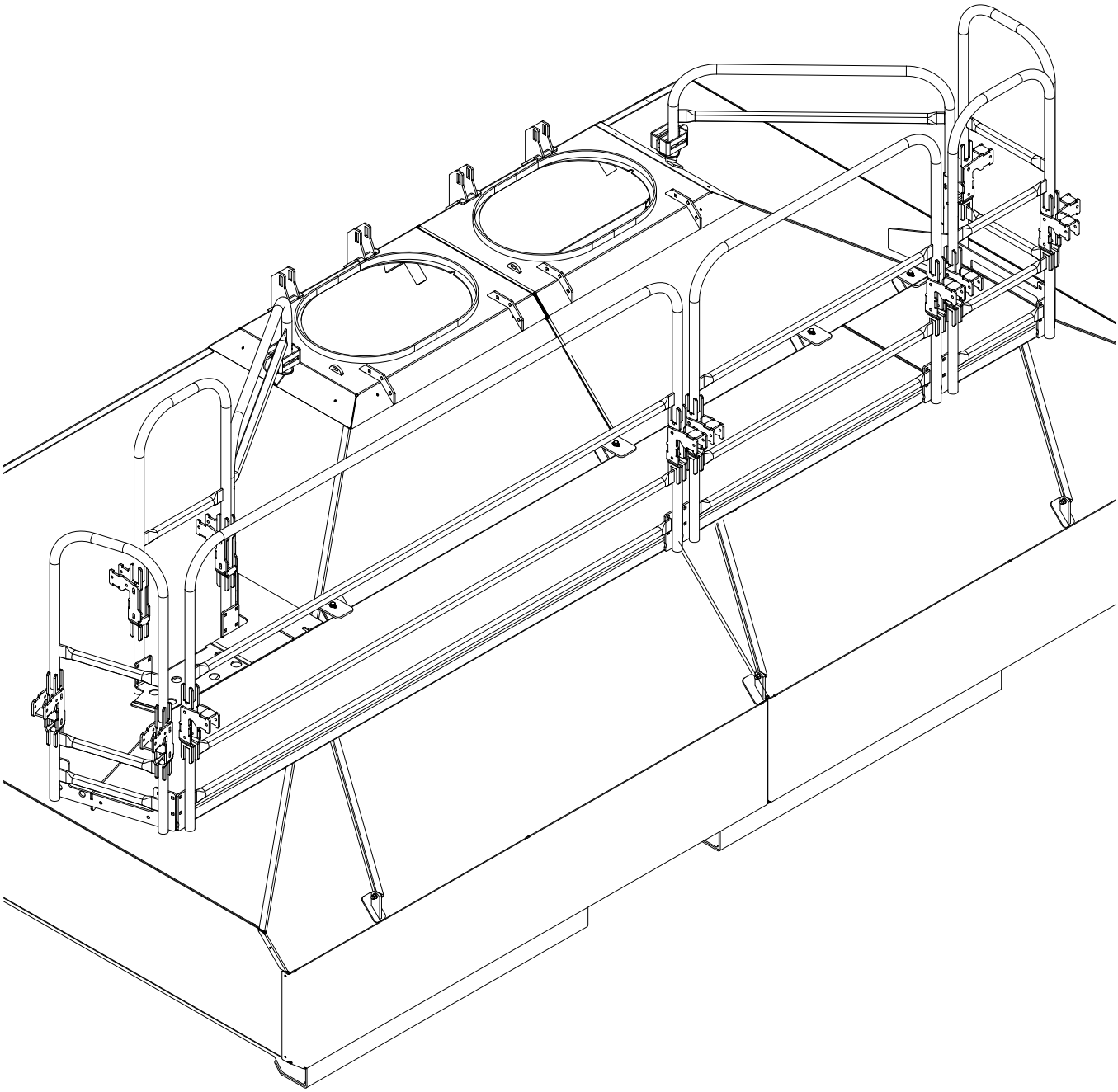

Item	Part No.	Description	Qty
1	C13447	Pin-Quick - 5/16 Dia 2 3/8 UL	16
2	D-5489	Washer - 13/32 ID x 13/16 OD x 16 Ga	4
3	S27987	Locknut - 3/8 w/ Flanged Center Lock	12
4	W-480	Bolt - 3/8 x 2 1/2 Lg	12
5	N64830	Handrail - 91 1/16 Lg (Overall)	1
6	N64831	Handrail - 45 13/16 Lg (Overall)	1
7	N64840	Handrail - End - 17 5/16 Lg (Overall)	3
8	N64842	Handrail - Front - 18 15/16 Lg (Overall)	1
9	N64850	Handrail - End - 37 5/16 Lg (Overall)	2

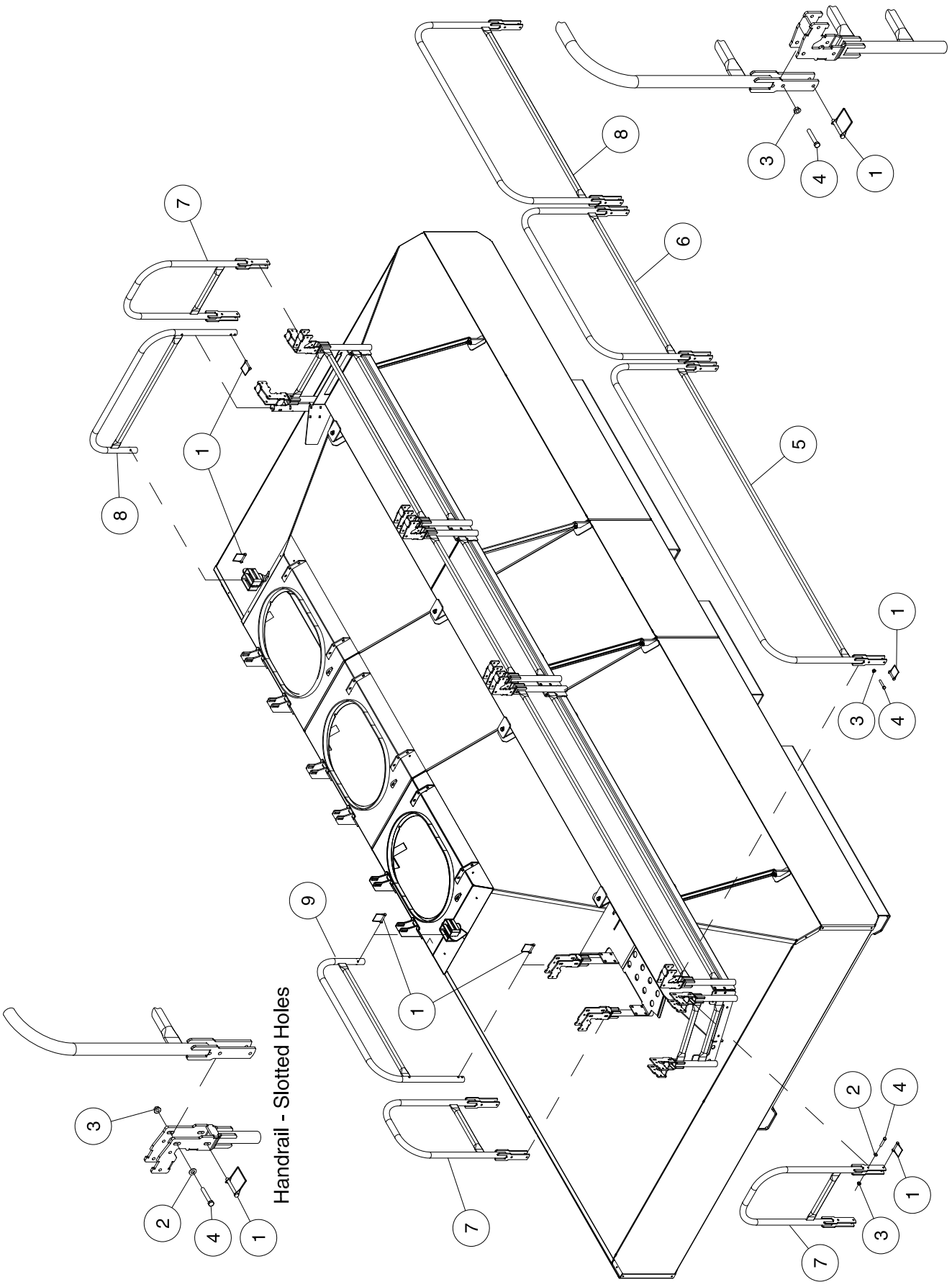
Handrail - Slotted Holes

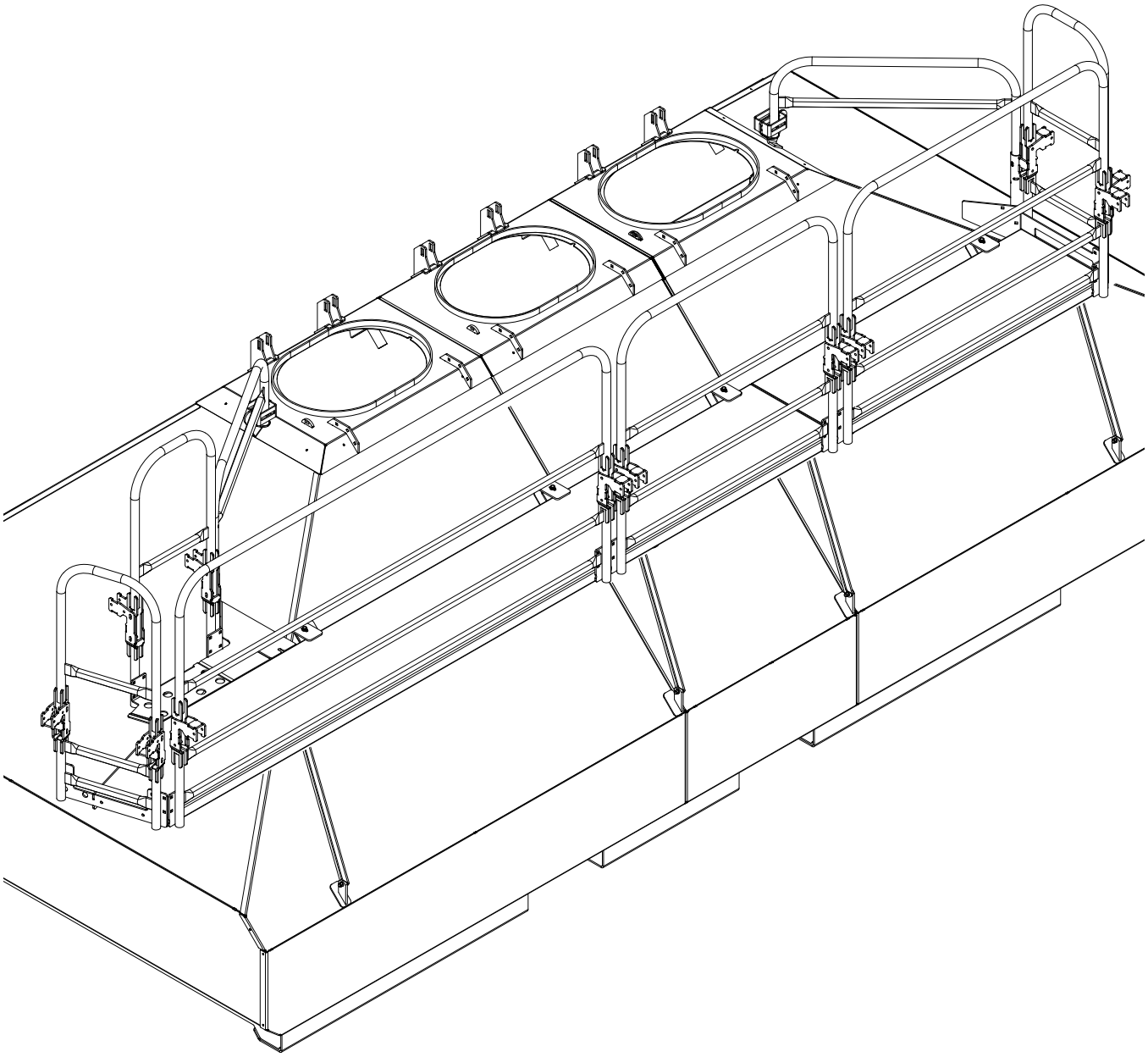

Item	Part No.	Description	Qty
1	C13447	Pin-Quick - 5/16 Dia 2 3/8 UL	16
2	D-5489	Washer - 13/32 ID x 13/16 OD x 16 Ga	4
3	S27987	Locknut - 3/8 w/ Flanged Center Lock	12
4	W-480	Bolt - 3/8 x 2 1/2 Lg	12
5	N64830	Handrail - 91 1/16 Lg (Overall)	1
6	N64831	Handrail - 45 13/16 Lg (Overall)	1
7	N64840	Handrail - End - 17 5/16 Lg (Overall)	3
8	N64843	Handrail - Front - 55 Lg (Overall)	1
9	N64850	Handrail - End - 37 5/16 Lg (Overall)	2

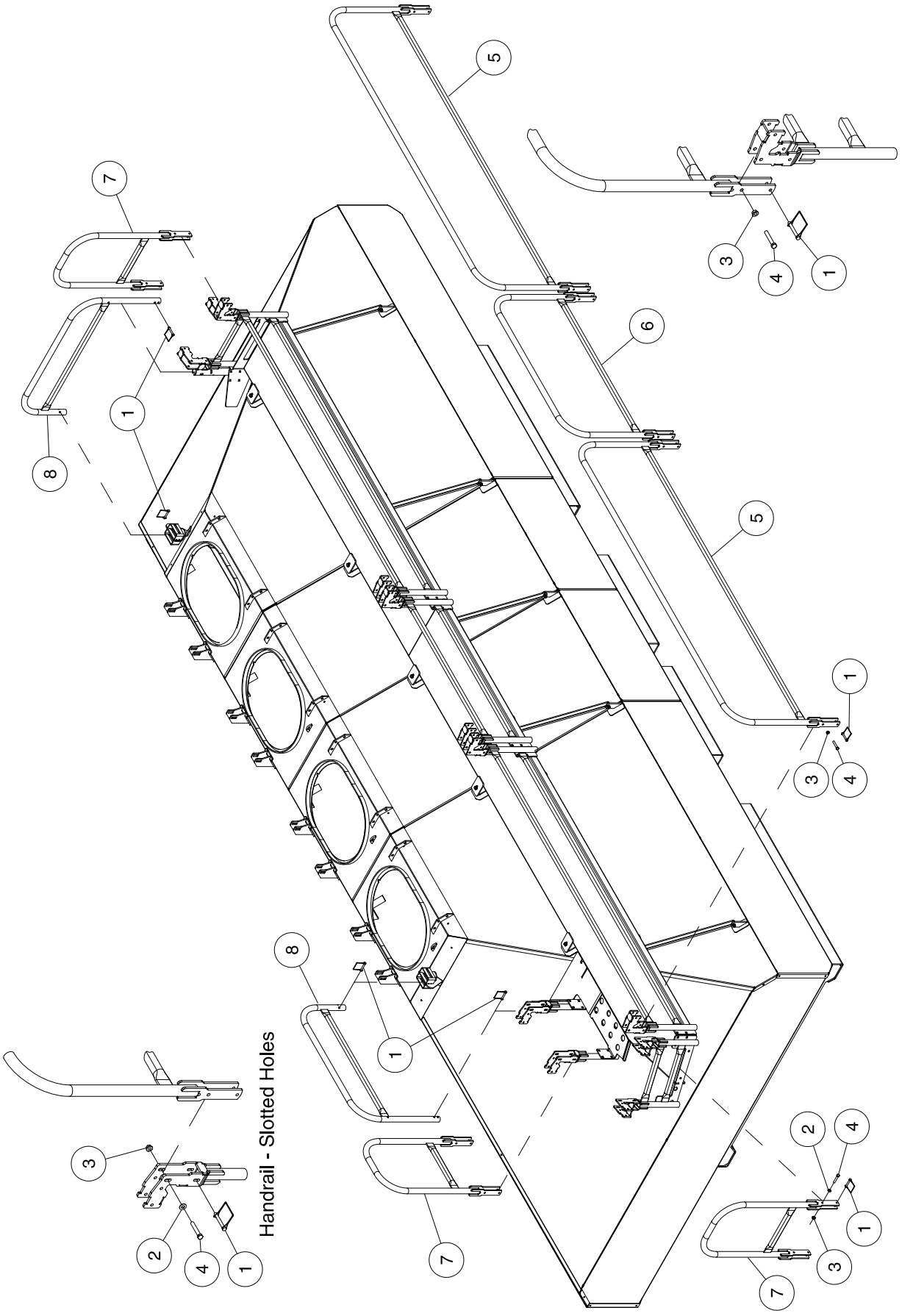
Handrail - Slotted Holes

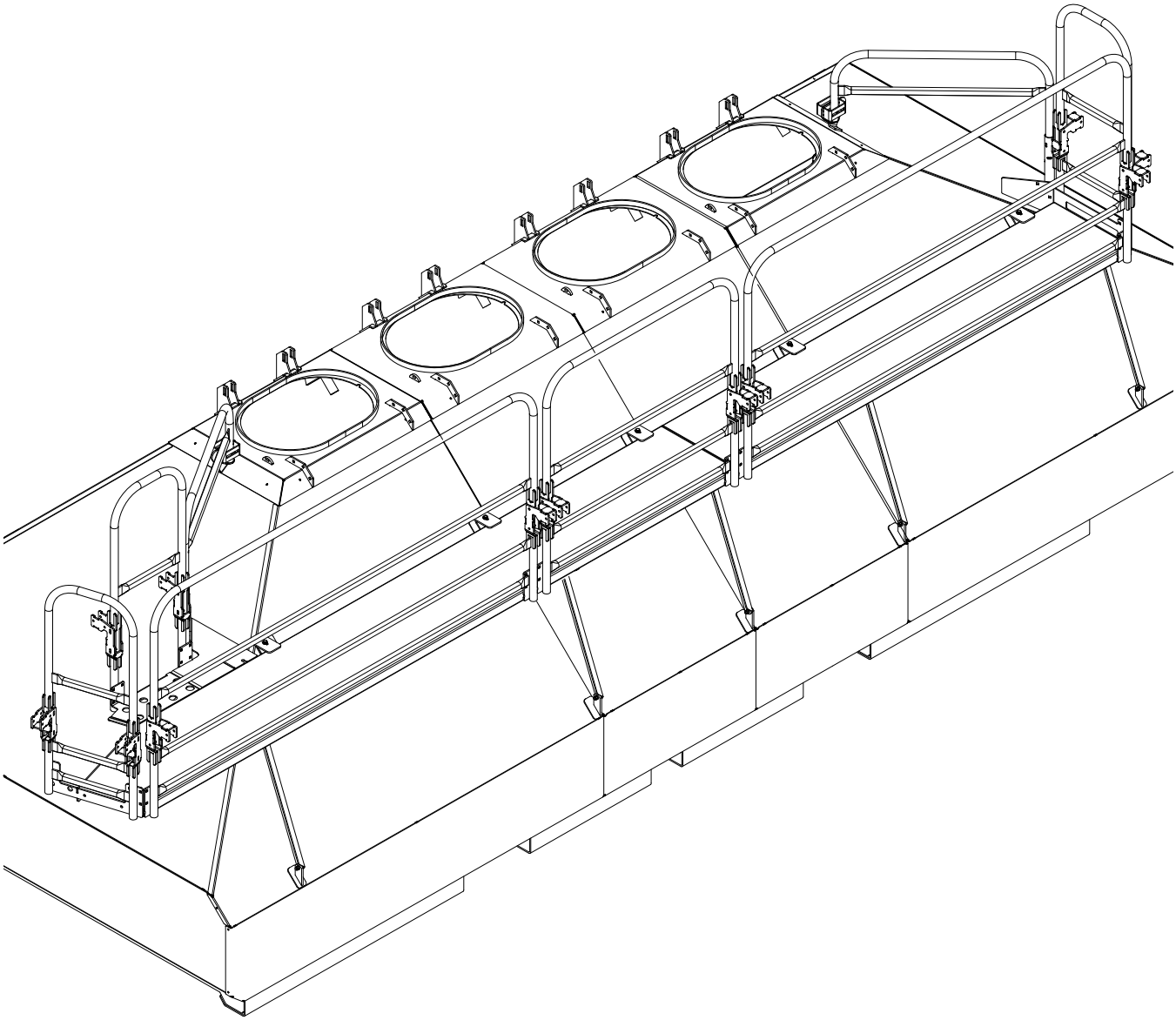

Item	Part No.	Description	Qty
1	C13447	Pin-Quick - 5/16 Dia 2 3/8 UL	16
2	D-5489	Washer - 13/32 ID x 13/16 OD x 16 Ga	4
3	S27987	Locknut - 3/8 w/ Flanged Center Lock	12
4	W-480	Bolt - 3/8 x 2 1/2 Lg	12
5	N64830	Handrail - 91 1/16 Lg (Overall)	2
6	N64831	Handrail - 45 13/16 Lg (Overall)	1
7	N64840	Handrail - End - 17 5/16 Lg (Overall)	3
8	N64850	Handrail - End - 37 5/16 Lg (Overall)	2

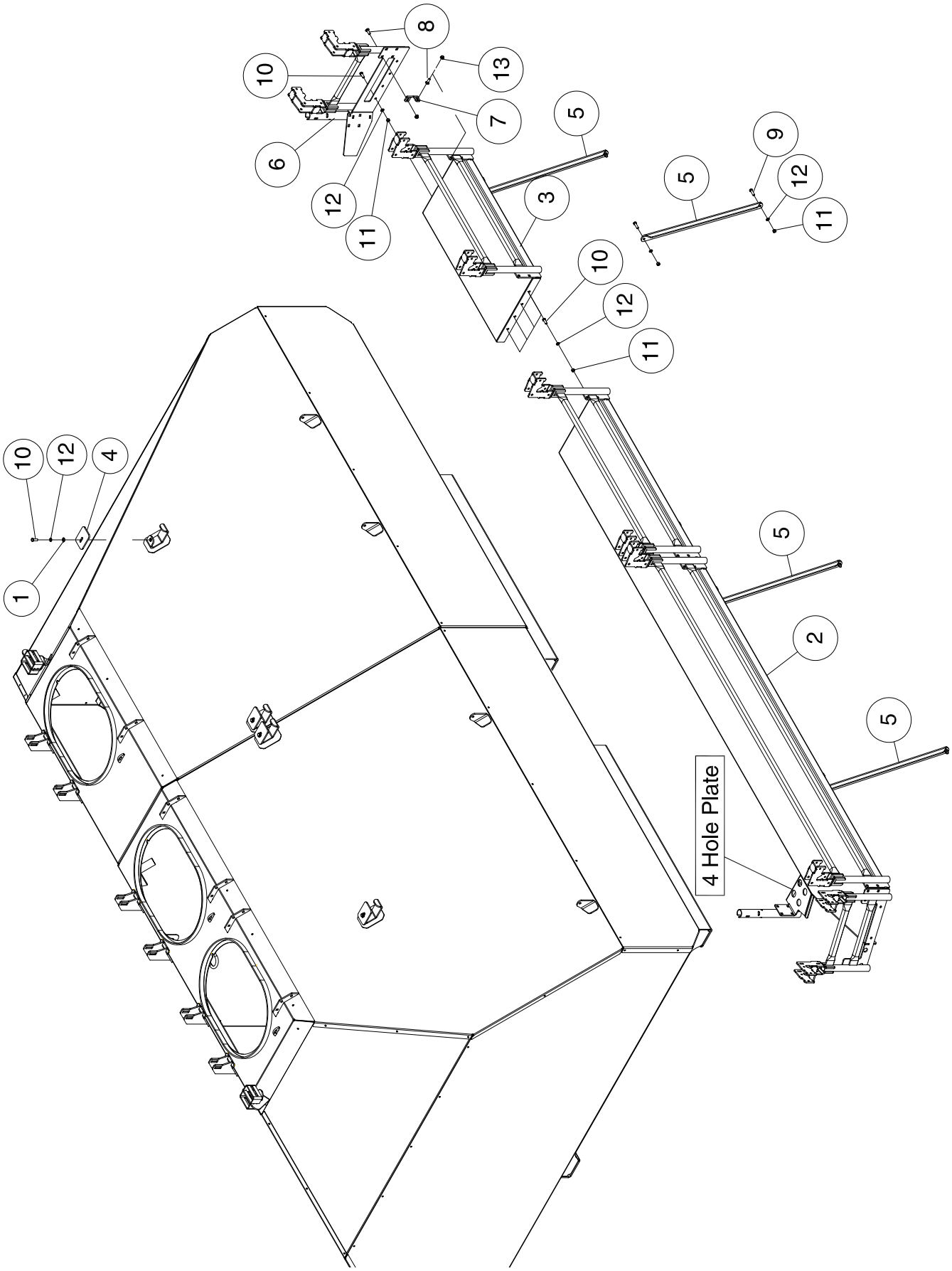
8
13
10
7
5
6
12
11
3
9
5
12
11
10
12
11
10
12
4
1
5
2
5
4 Hole Plate

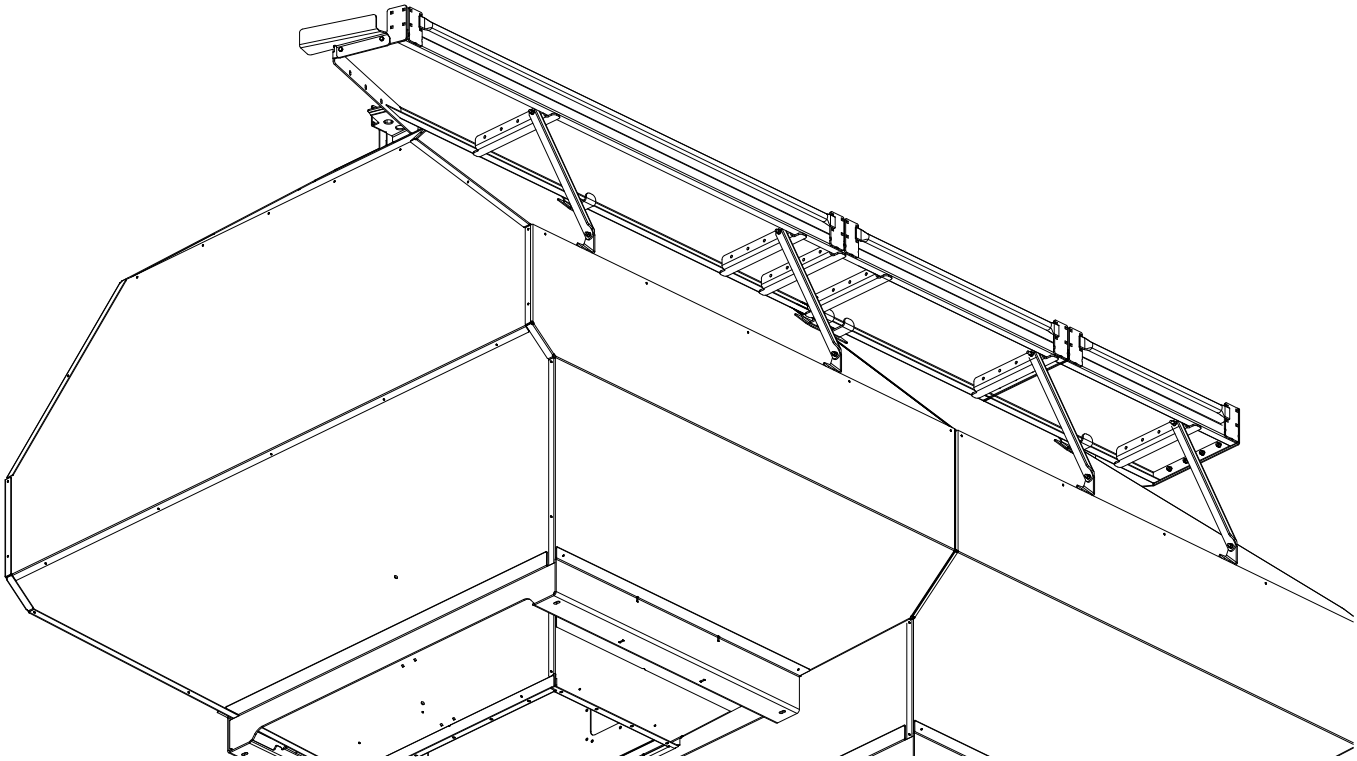

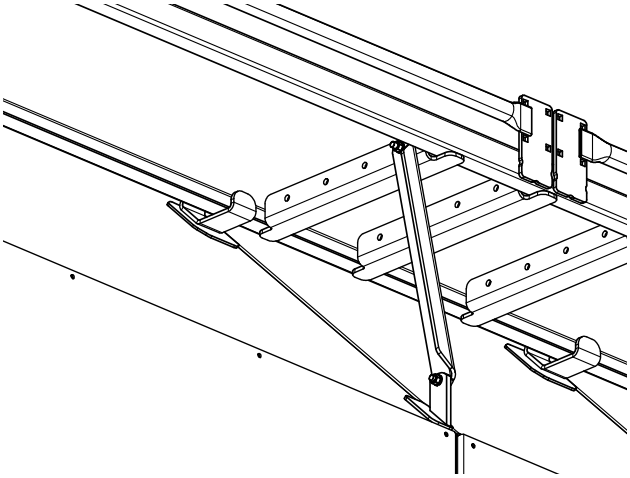

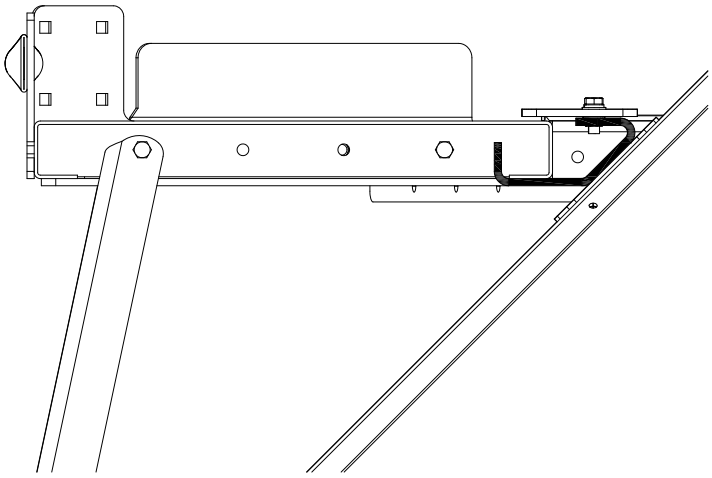

Item	Part No.	Description	Qty
1	D-5489	Washer - 13/32 ID x 13/16 OD x 16 Ga	4
2	N64800	Walkway - Main - 144 7/16 Lg with **4 hole plate**	1
3	N64802	Walkway Addition - 36 3/8 Lg	1
4	N51238	Plate - Clamp	4
5	N51890	Bracket - Walkway Support - 28 1/2 hole centers	4
6	N64801	Plate - Front Kick	1
7	N64811	Plate - Brace	1
8	P7C616	Carriage Bolt - 3/8 x 1 Lg	2
9	W-187	Hex Bolt - 3/8 x 1 1/4 Lg	8
10	W-475	Hex Bolt - 3/8 x 1 Lg	12
11	W-514	Hex Nut - 3/8	16
12	W-523	Lockwasher - 3/8	20
13	S27987	Lock Nut - 3/8 Flanged Center Lock	2

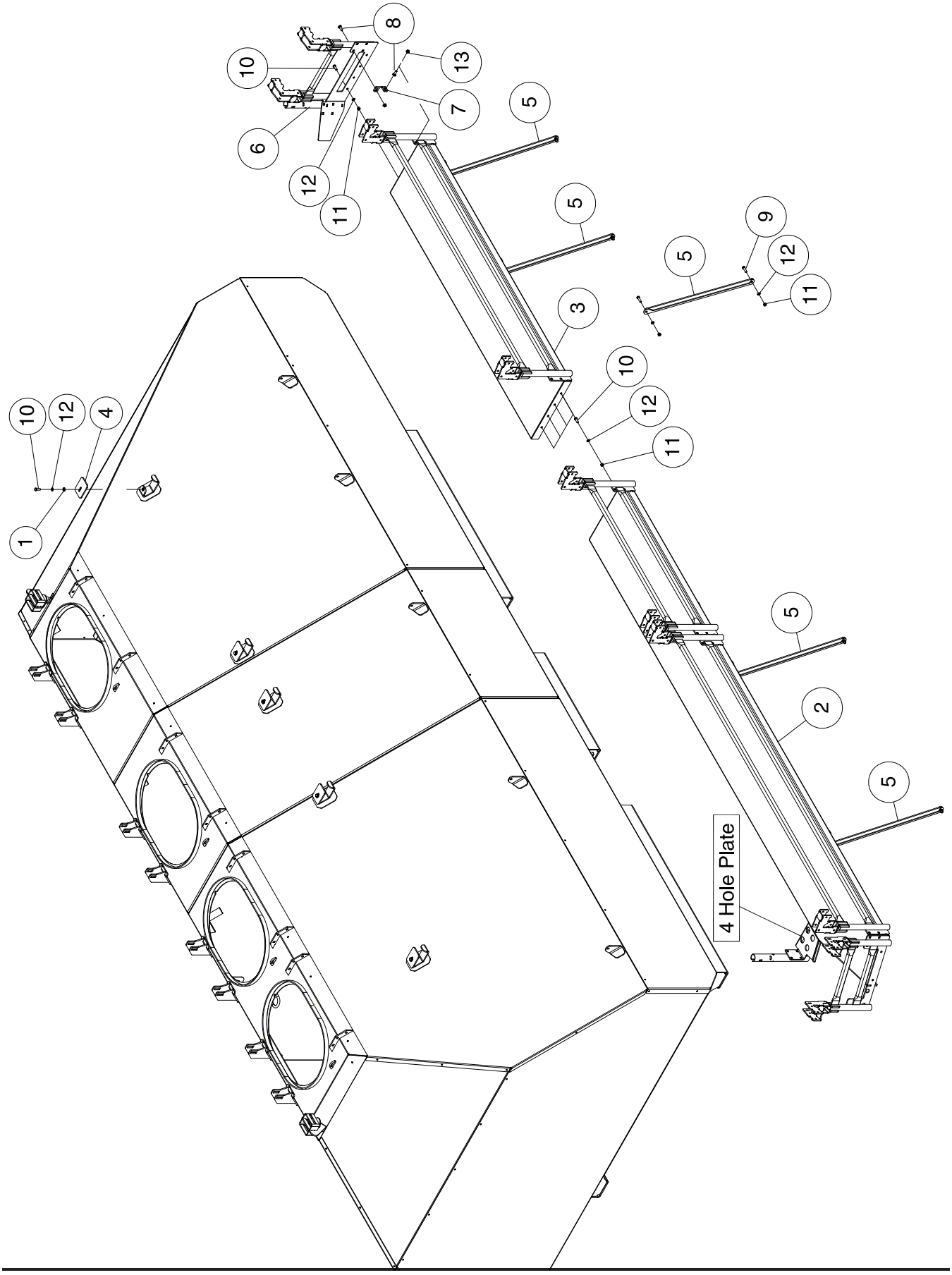
8
13
10
7
6
5
12
11
5
9
5
12
11
3
10
12
11
10
12
4
1
5
2
5
4 Hole Plate

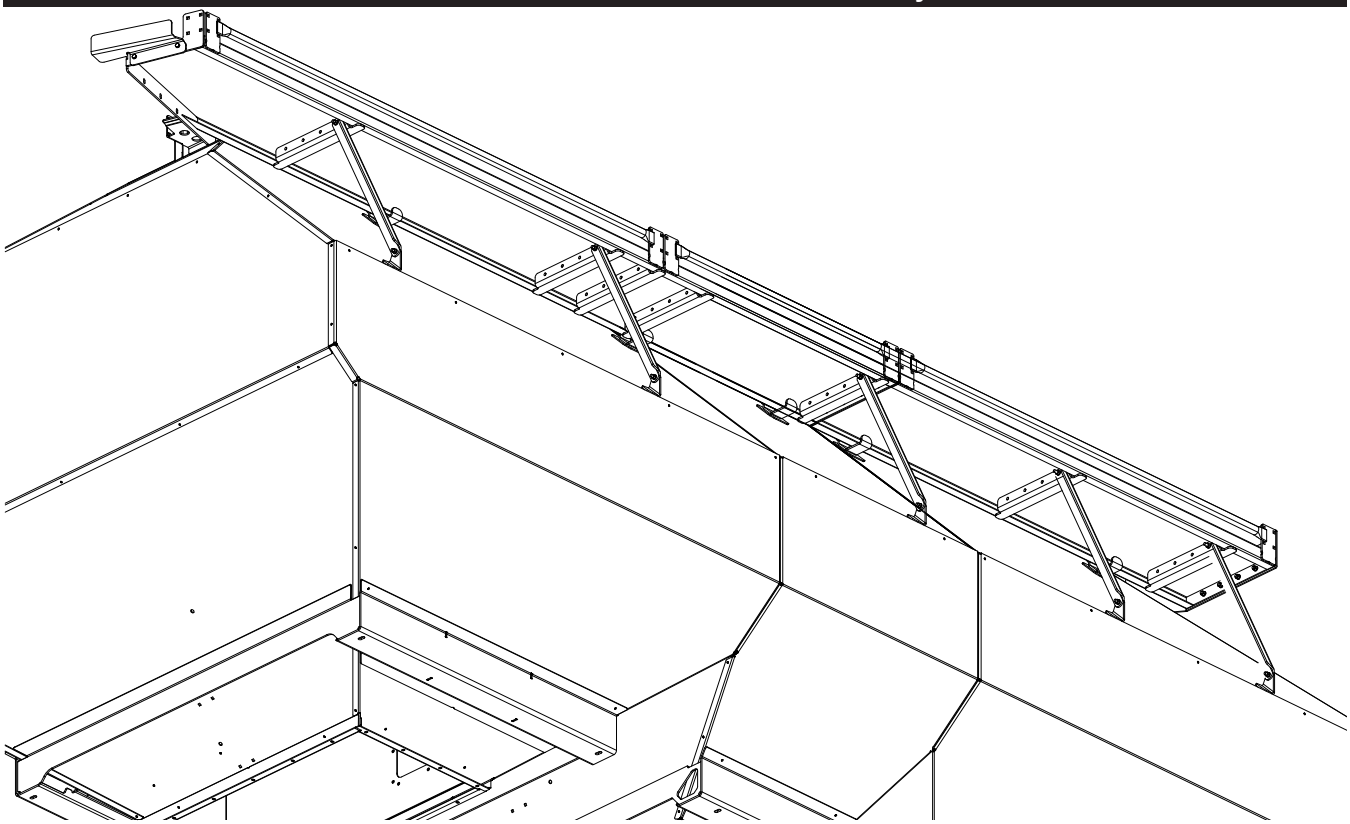

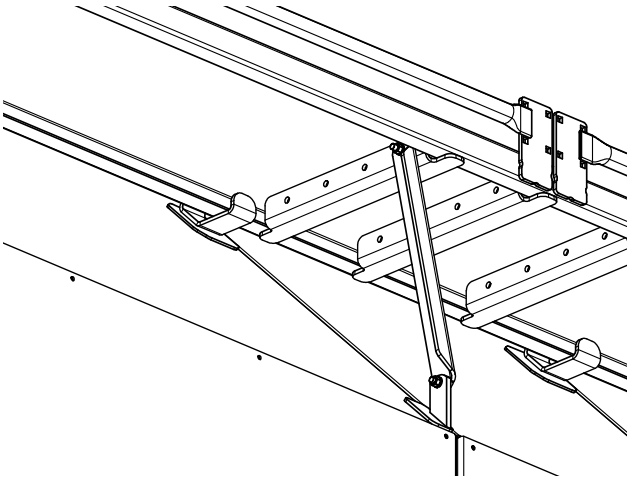

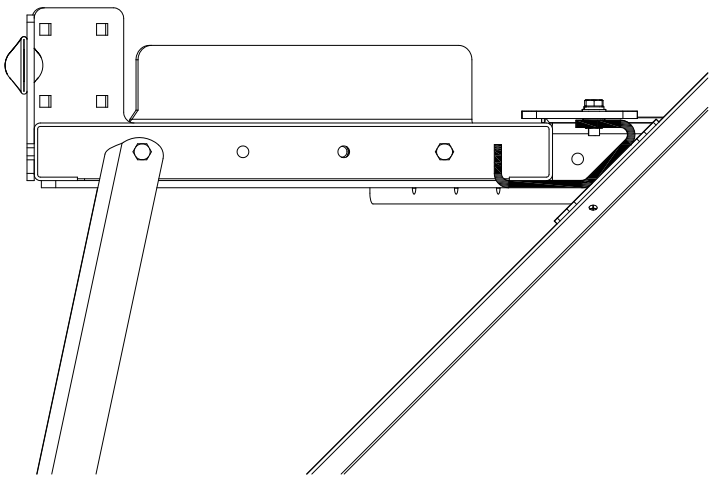

Item	Part No.	Description	Qty
1	D-5489	Washer - 13/32 ID x 13/16 OD x 16 Ga	5
2	N64800	Walkway - Main - 144 7/16 Lg with **4 hole plate**	1
3	N64803	Walkway Addition - 76 7/16 Lg	1
4	N51238	Plate - Clamp	5
5	N51890	Bracket - Walkway Support - 28 1/2 hole centers	5
6	N64801	Plate - Front Kick	1
7	N64811	Plate - Brace	1
8	P7C616	Carriage Bolt - 3/8 x 1 Lg	2
9	W-187	Hex Bolt - 3/8 x 1 1/4 Lg	10
10	W-475	Hex Bolt - 3/8 x 1 Lg	13
11	W-514	Hex Nut - 3/8	18
12	W-523	Lockwasher - 3/8	23
13	S27987	Lock Nut - 3/8 Flanged Center Lock	2

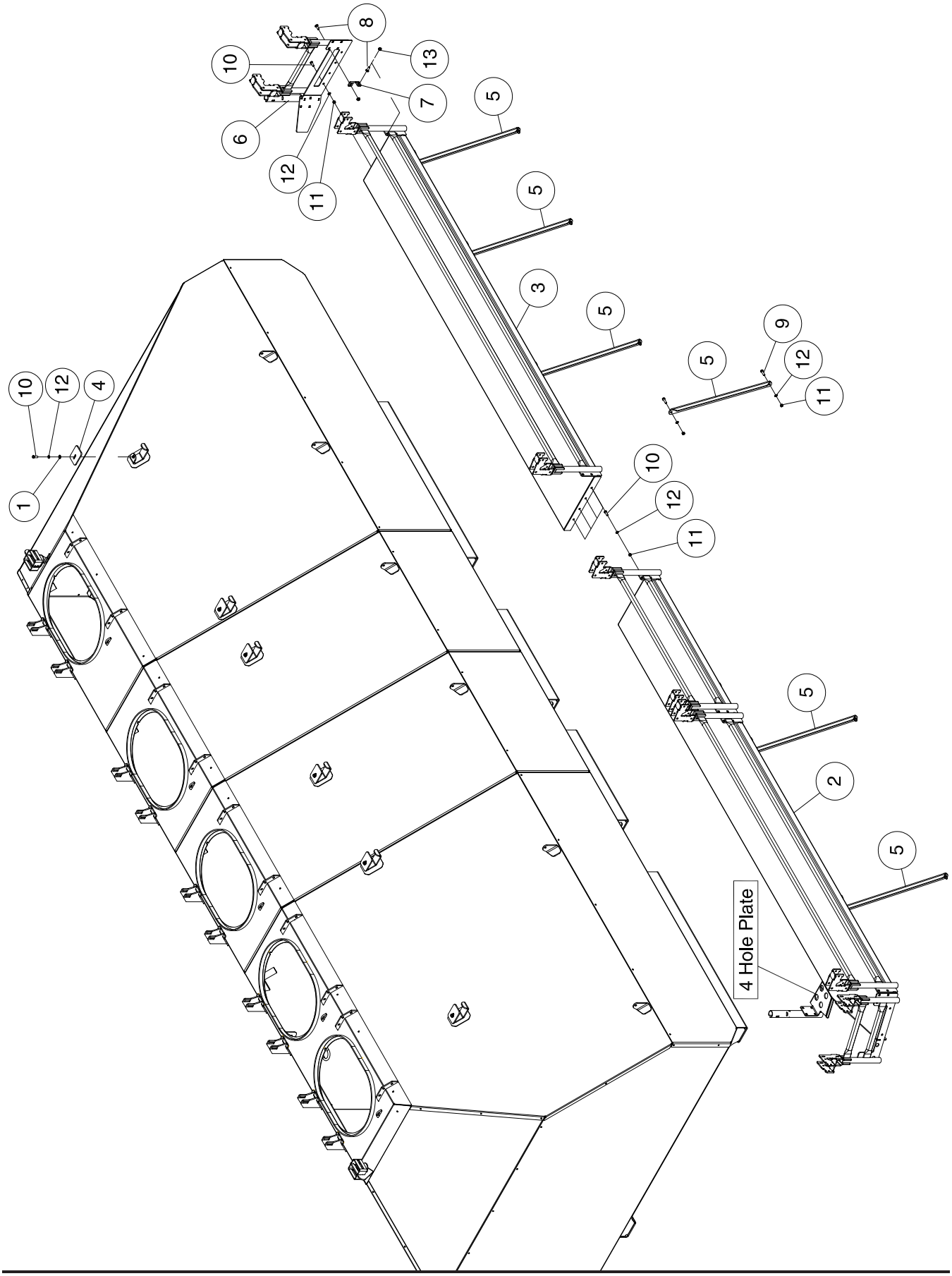
8
13
10
7
5
6
12
11
5
3
5
5
9
12
11
10
12
4
1
10
12
11
5
2
5
4 Hole Plate

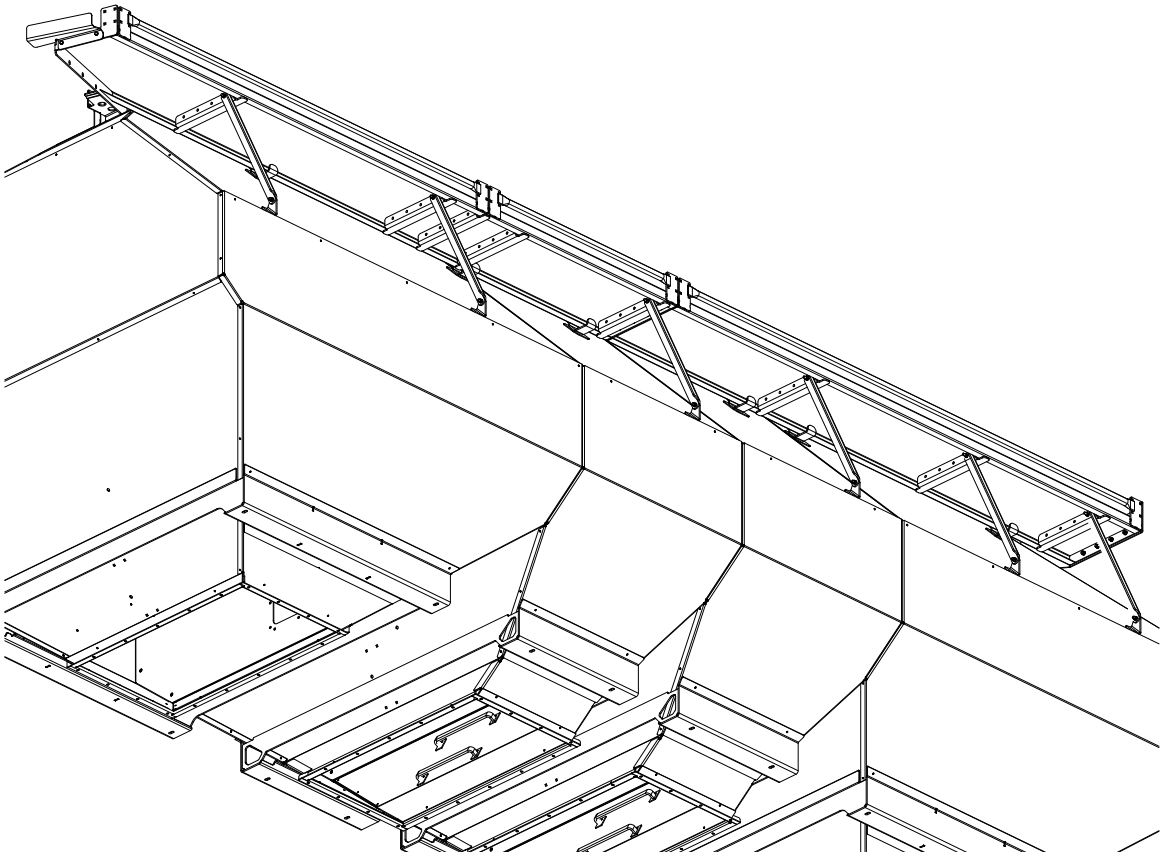

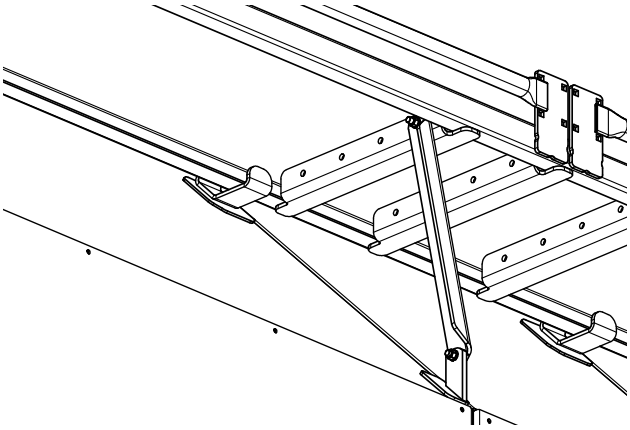

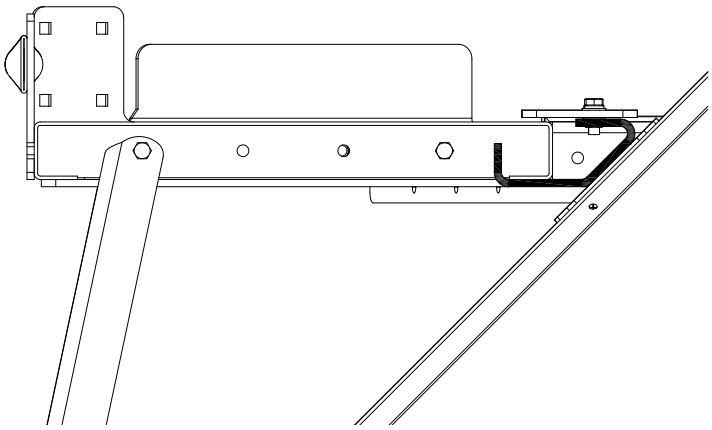

Item	Part No.	Description	Qty
1	D-5489	Washer - 13/32 ID x 13/16 OD x 16 Ga	6
2	N64800	Walkway - Main - 144 7/16 Lg with **4 hole plate**	1
3	N64804	Walkway Addition - 116 1/2 Lg	1
4	N51238	Plate - Clamp	6
5	N51890	Bracket - Walkway Support - 28 1/2 hole centers - 9800	6
	N55514	Bracket - Walkway Support - 33 7/8 hole centers - 91000	6
6	N64801	Plate - Front Kick	1
7	N64811	Plate - Brace	1
8	P7C616	Carriage Bolt - 3/8 x 1 Lg	2
9	W-187	Hex Bolt - 3/8 x 1 1/4 Lg	12
10	W-475	Hex Bolt - 3/8 x 1 Lg	14
11	W-514	Hex Nut - 3/8	20
12	W-523	Lockwasher - 3/8	26
13	S27987	Lock Nut - 3/8 Flanged Center Lock	2

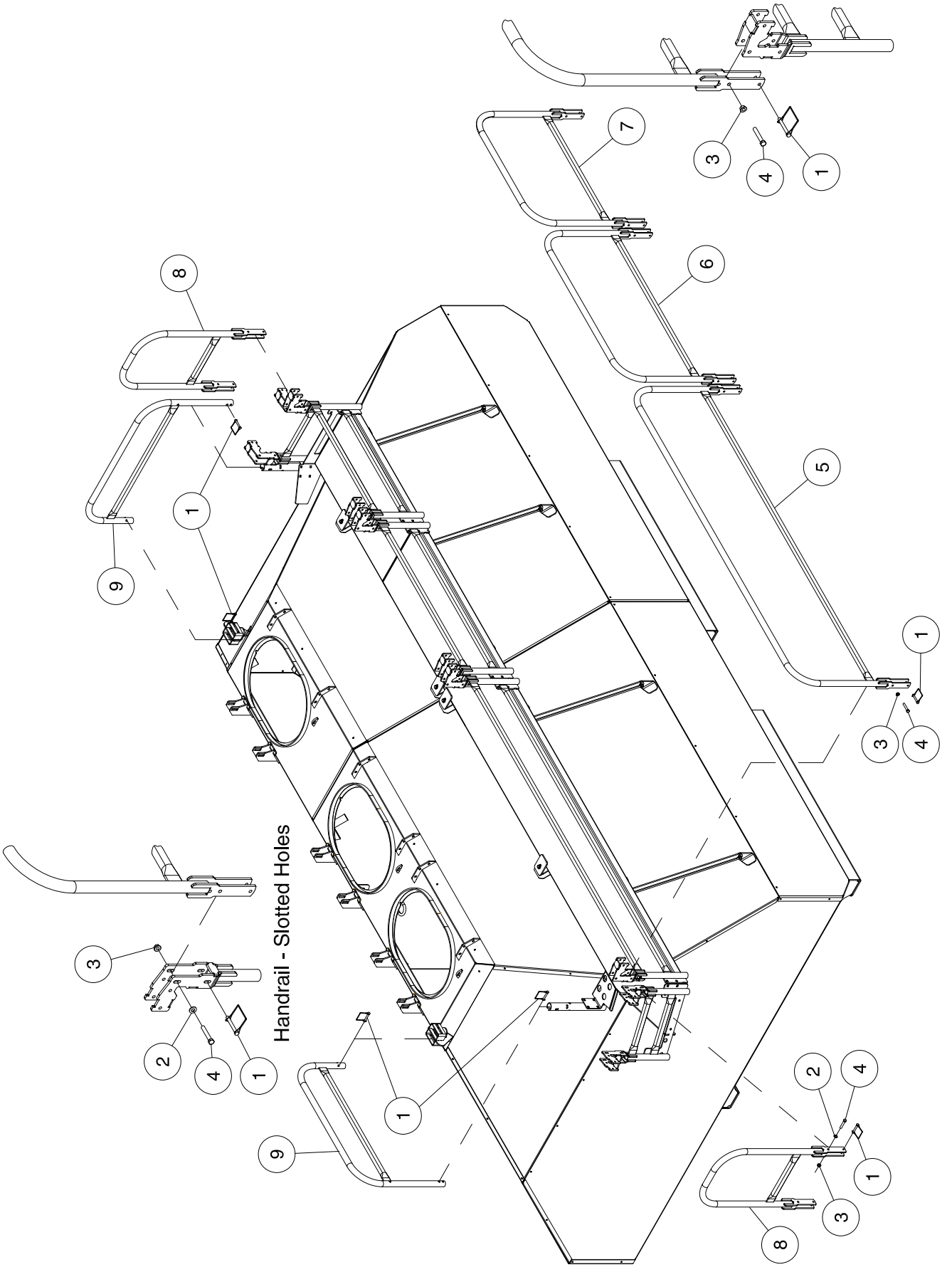
Handrail - Slotted Holes

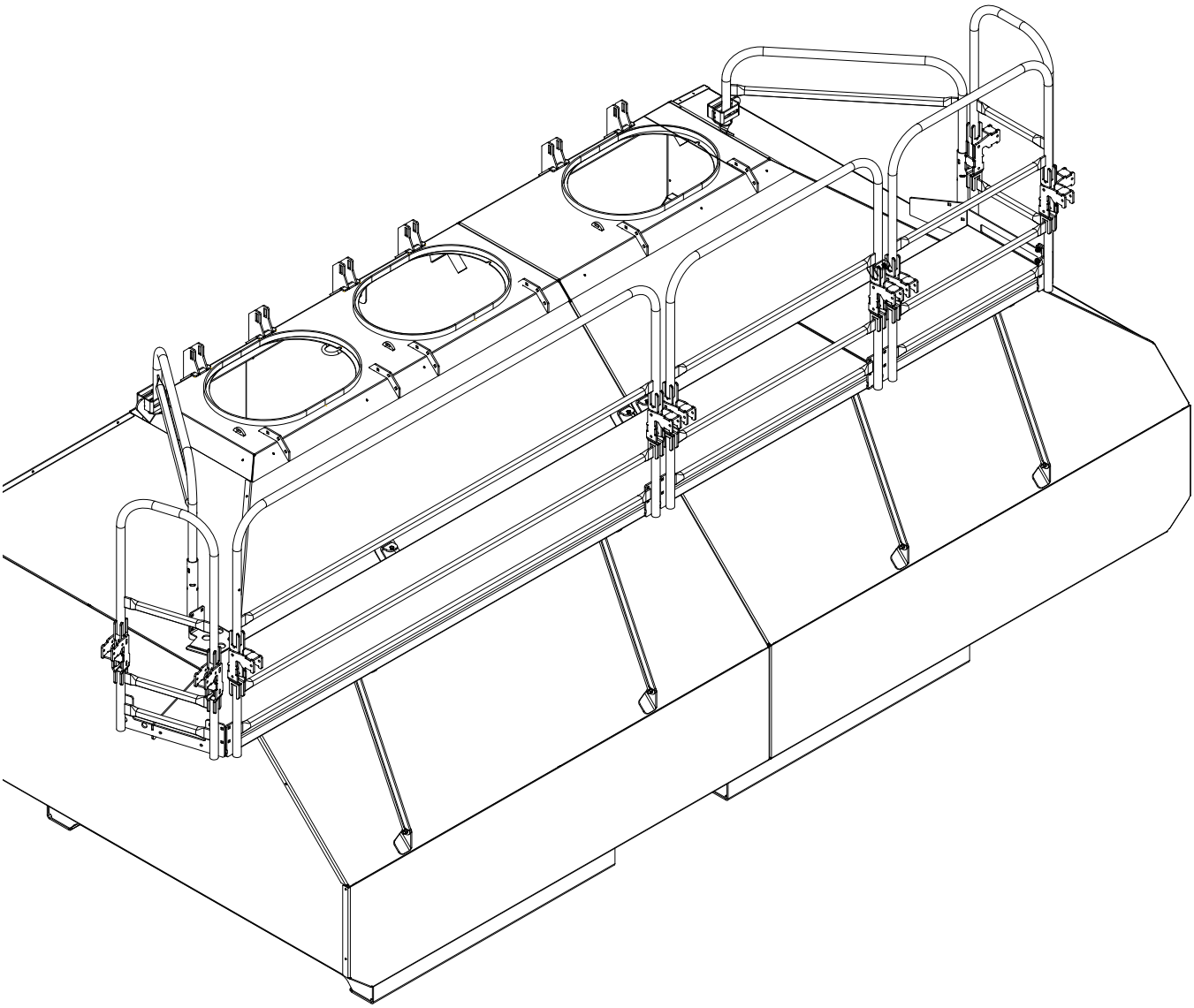

Item	Part No.	Description	Qty
1	C13447	Pin-Quick - 5/16 Dia 2 3/8 UL	14
2	D-5489	Washer - 13/32 ID x 13/16 OD x 16 Ga	2
3	S27987	Locknut - 3/8 w/ Flanged Center Lock	10
4	W-480	Bolt - 3/8 x 2 1/2 Lg	10
5	N64830	Handrail - 91 1/16 Lg (Overall)	1
6	N64831	Handrail - 45 13/16 Lg (Overall)	1
7	N64832	Handrail - 34 9/16 Lg (Overall)	1
8	N64840	Handrail - End - 17 5/16 Lg (Overall)	2
9	N64850	Handrail - End - 37 5/16 Lg (Overall)	2

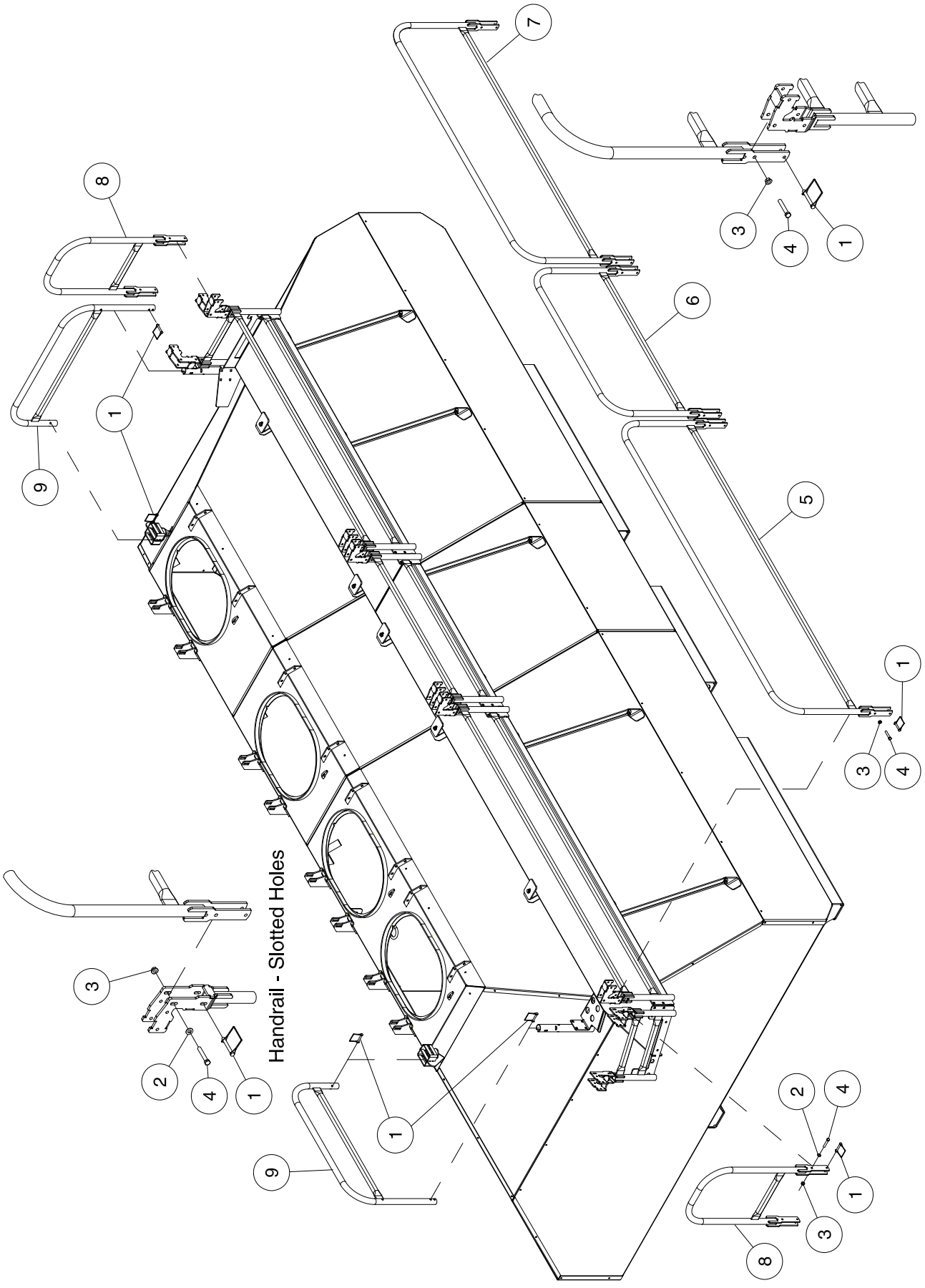
Handrail - Slotted Holes

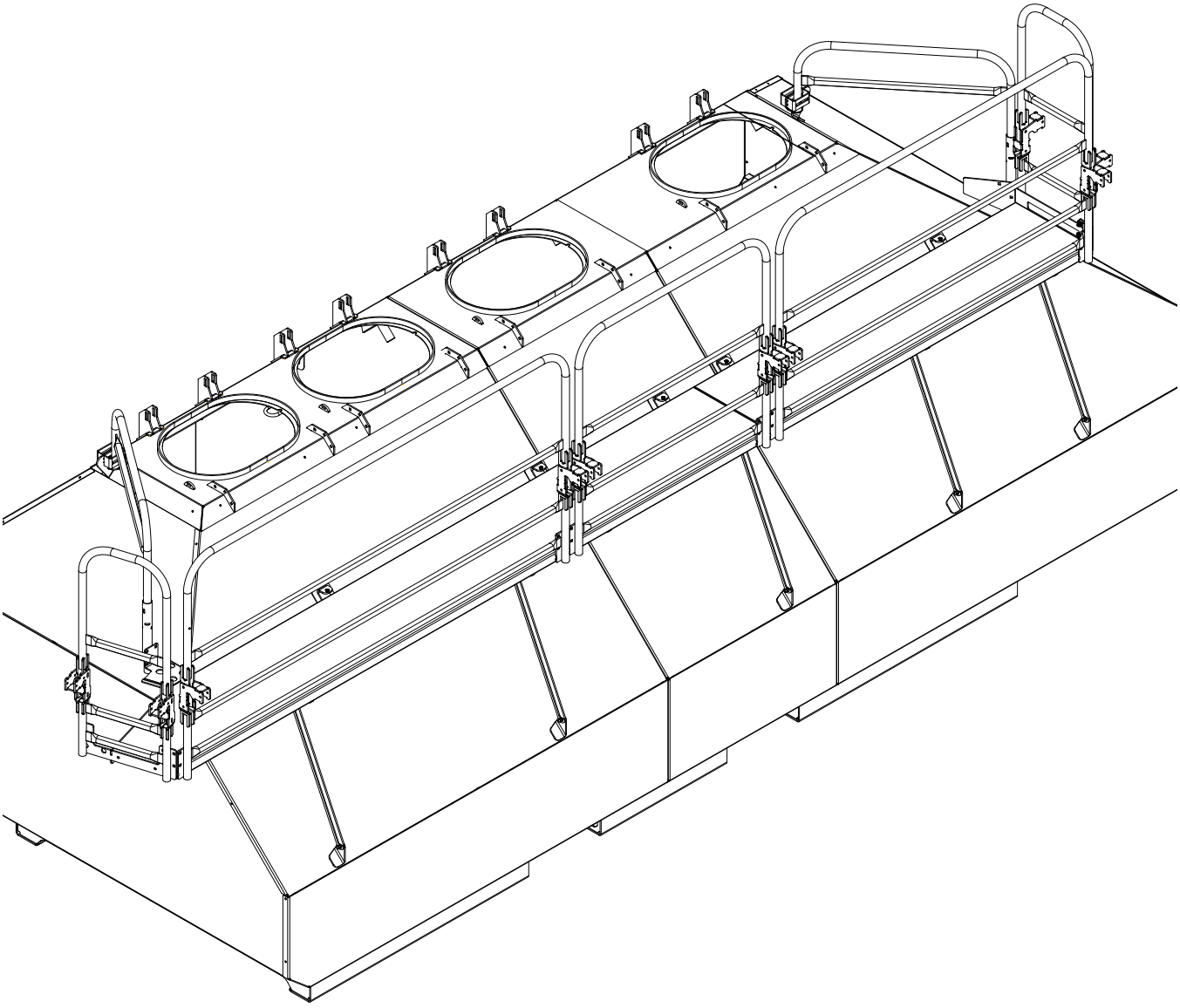

Item	Part No.	Description	Qty
1	C13447	Pin-Quick - 5/16 Dia 2 3/8 UL	14
2	D-5489	Washer - 13/32 ID x 13/16 OD x 16 Ga	2
3	S27987	Locknut - 3/8 w/ Flanged Center Lock	10
4	W-480	Bolt - 3/8 x 2 1/2 Lg	10
5	N64830	Handrail - 91 1/16 Lg (Overall)	1
6	N64831	Handrail - 45 13/16 Lg (Overall)	1
7	N64833	Handrail - 74 5/8 Lg (Overall)	1
8	N64840	Handrail - End - 17 5/16 Lg (Overall)	2
9	N64850	Handrail - End - 37 5/16 Lg (Overall)	2

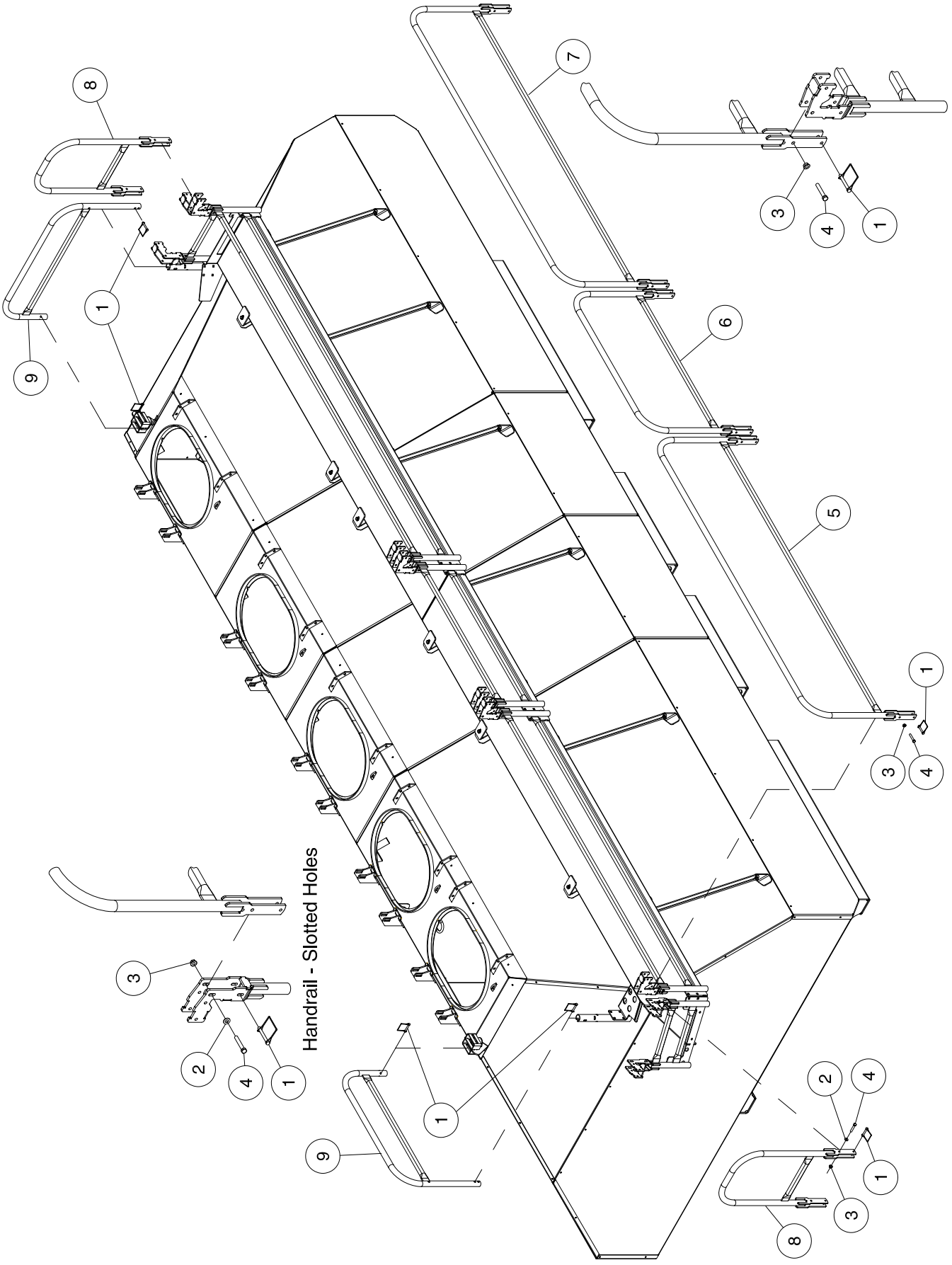
Handrail - Slotted Holes

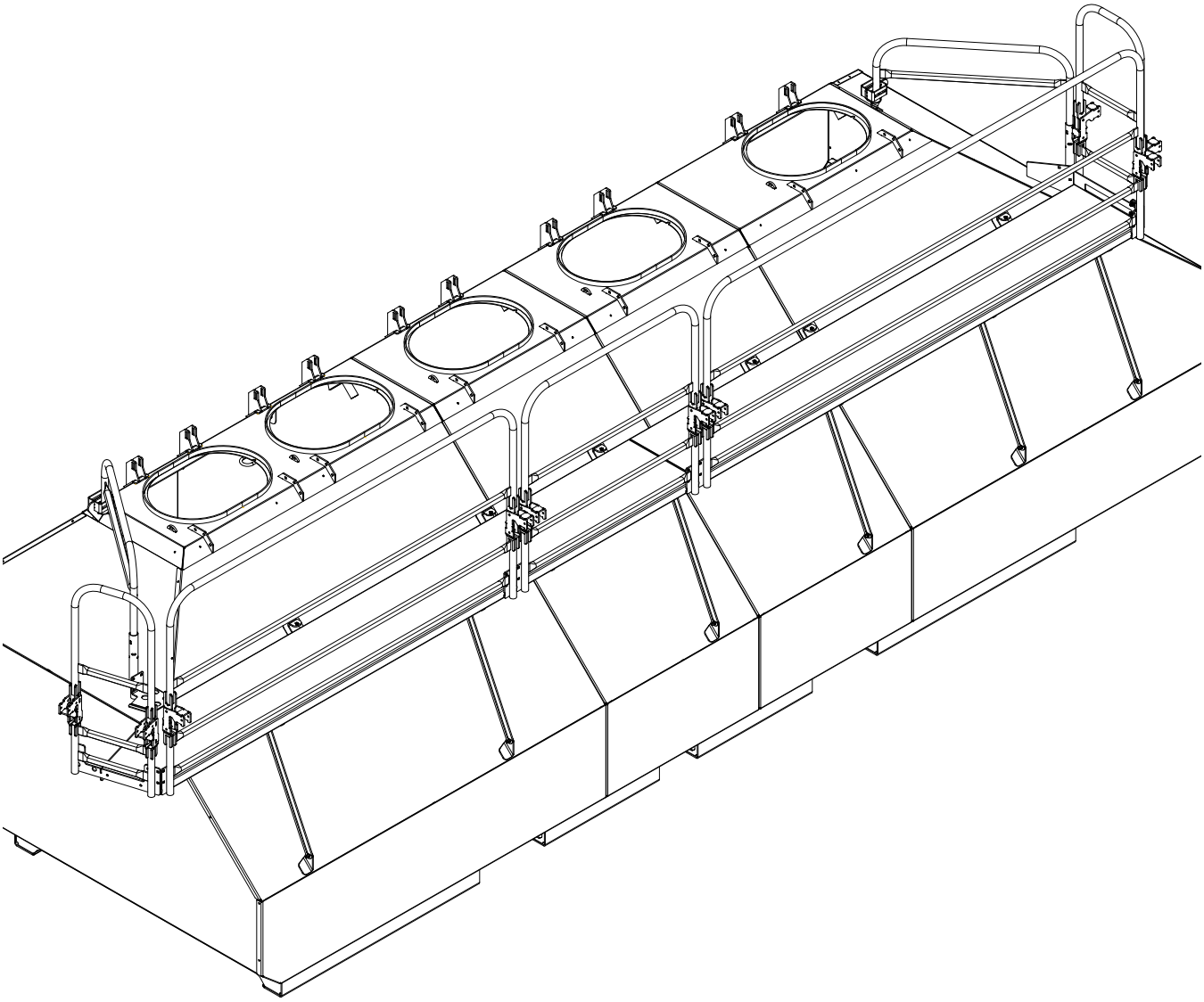

Item	Part No.	Description	Qty
1	C13447	Pin-Quick - 5/16 Dia 2 3/8 UL	14
2	D-5489	Washer - 13/32 ID x 13/16 OD x 16 Ga	2
3	S27987	Locknut - 3/8 w/ Flanged Center Lock	10
4	W-480	Bolt - 3/8 x 2 1/2 Lg	10
5	N64830	Handrail - 91 1/16 Lg (Overall)	1
6	N64831	Handrail - 45 13/16 Lg (Overall)	1
7	N64834	Handrail - 114 11/16 Lg (Overall)	1
8	N64840	Handrail - End - 17 5/16 Lg (Overall)	2
9	N64850	Handrail - End - 37 5/16 Lg (Overall)	2

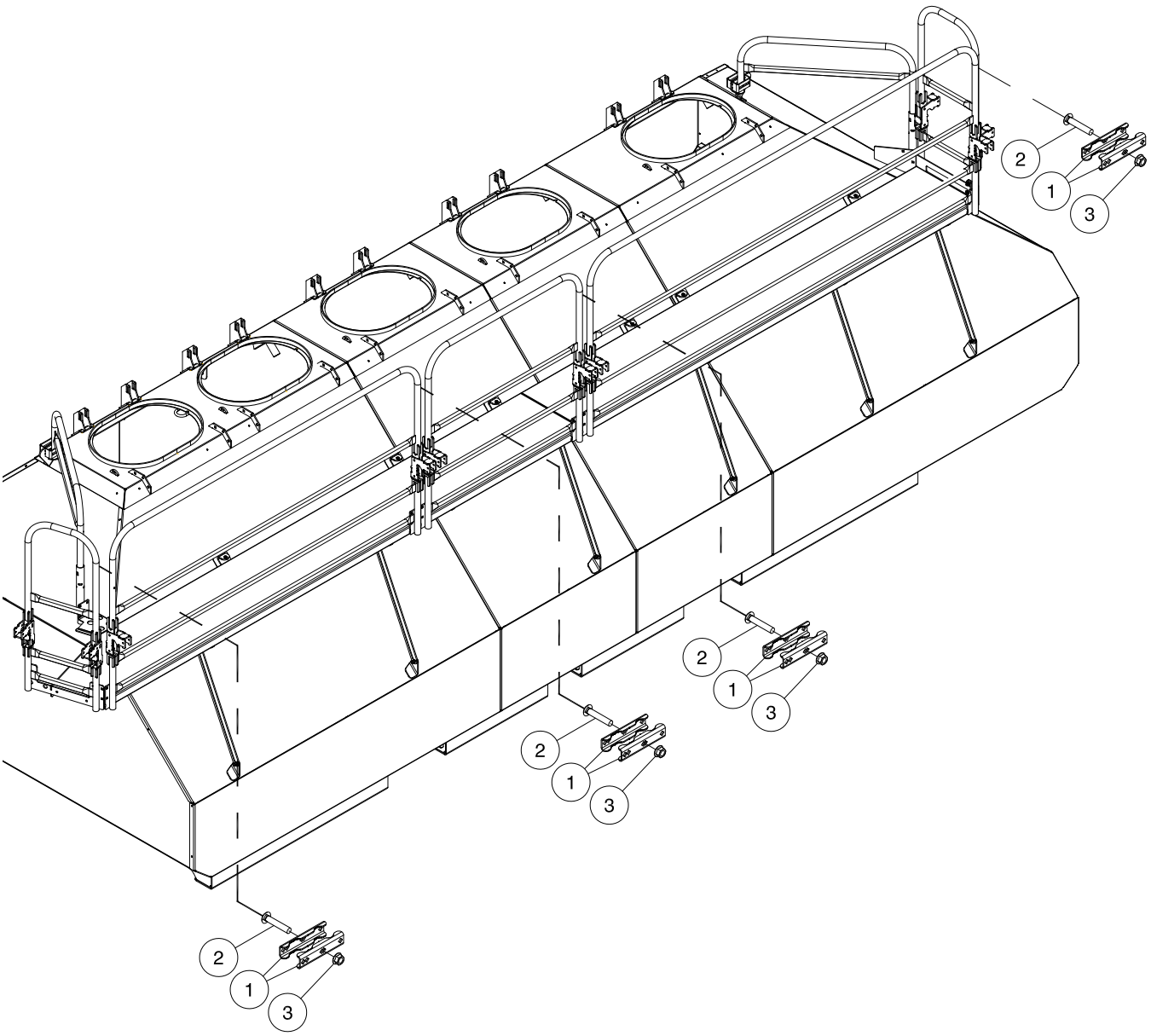

Item	Part No.	Description	Qty
1	N66407	Pin-Quick - 5/16 Dia 2 3/8 UL	8
2	S28159	Carriage Bolt - 3/8 x 2 1/2 Lg	12
3	D-5279	Locknut - 3/8 Serrated Flange	12
	N66665	Kit - Handrail Clamps (includes above items) Optional kit to supply rail clamps to customers who want to secure the folding handrails at top.	

Section 4:
Frame & Axles

Section Contents

Frame - Tow Behind 4-2
9365, 9450 and 9535 4-2
9445, 9550 and 9650 - Prior to 2016 4-4
Frame - Tow Between 4-6
9365 and 9450 4-6
9445, 9550 and 9650 - Prior to 2016 4-8
Frame 4-10
9445, 9550 and 9650 - 2016 to Present 4-10
9800 and 91000 4-12
Rear Axle Assembly 4-14
9445, 9550 and 9650 - 2016 to Present 4-14
9800 and 91000 4-15
Castor Axle 4-16
9365 and 9450 - Tow Behind 4-16
Quad Steer Axle 4-17
Tongue Support - 9365, 9450 and 9535 4-17
Tongue Support - 9445, 9550 and 9650 - Prior to 2015 4-17
9365, 9450 and 9535 - Prior to 2021 4-18
9445, 9550 and 9650 - Prior to 2015 4-18
9365, 9450 and 9535 - 2021 to Present 4-20
9445, 9550 and 9650 - 2015 to Present 4-24
9800 and 91000 4-28
Hydraulic Hitch Jack - Tow Between 4-32
9445, 9550, 9650 and 9800 - Standard 4-32
9365, 9450 and 9535 - Optional 4-32
Hydraulics 4-33
Hydraulic Hose Holders - Tow Between Hitch 4-34

Frame - Tow Behind
9365, 9450 and 9535

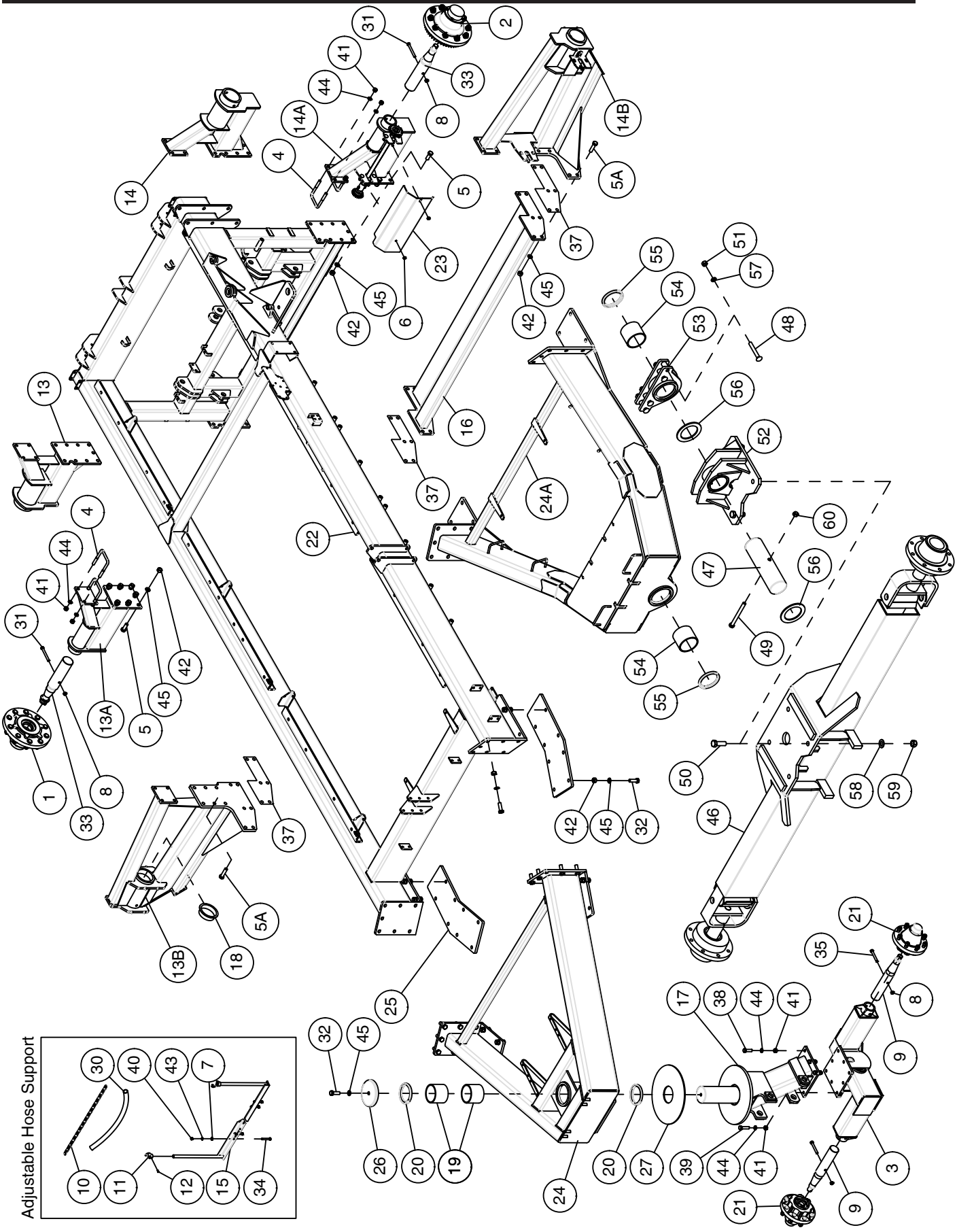

Frame - Tow Behind - 9365, 9450 and 9535

Item	Part No.	Description	Qty
1	*****	Nondrive Hub (See Section 6)	1
2	*****	Drive Hub (See Section 6)	1
3	*****	Walking Axle (See Page 4-16)	1
4	C-219	U-Bolt - 5/8 x 4 x 5 9/16	4
5	C-695	Hex Bolt - 3/4 x 2 Lg	14
5A	W-509	Hex Bolt - 3/4 x 2 1/2 Lg - 800 Dual Tire Option	24
6	D-5279	Flange Lock Nut - 3/8	2
7	D-5489	Washer - 13/32 ID x 13/16 OD x 16 Ga	4
8	F-3405	Locknut - 1/2 Unitorque	4
9	N19166	Spindle - 2.5 Dia	2
10	N19448	Chain - 3/16 x 80 Links	1
11	N19717	Chain Hook	2
12	N24396	Set Screw - 1/4 x 1/2	2
13	**N69735**	**3M STUB AXLE - 9365/9450 - 2023 to present**	**1**
13A	N36691	Axle - Extension - Right (32 Tires)	1
	N45072	Axle Extension - Right - 520 Dual Tire Option (N45522 - End Plug - Plastic)	1
	N55992	**Axle Extension - Right - 520 Dual Tire Option - Used with Cross Brace N56215**	
13B	N53680	Axle Extension - Right - 800 Dual Tire Option **- Used with Cross Brace N56215**	
14	**N69735**	**3M STUB AXLE - 9365/9450 - 2023 to present**	**1**
14A	N36692	Axle - Extension - Left (32 Tires)	1
	N45071	Axle Extension - Left - 520 Dual Tire Option (N45522 - End Plug - Plastic)	1
	N55991	**Axle Extension - Left - 520 Dual Tire Option - Used with Cross Brace N56215**	
14B	N53685	Axle Extension - Left - 800 Dual Tire Option **- Used with Cross Brace N56215**	
15	N33834	Bracket	2
16	**N56215**	**Crose Brace - Dual Tire Option**	**1**
17	N36178	Castor Weldment	1
18	N45522	End Plug - Plastic	2
19	N36225	Polylube Bushing	2
20	N36228	Dust Seal	2
21	* * * * *	Non-Drive Hub (See Section 6)	2
22	N48990	Main Frame - Small Frame	1
23	N36342	Guard - Jackshaft	1
	N45070	Guard - Jackshaft - 520 Dual Tire Option	1
	N50362	Guard - Jackshaft - 43 5/8 Lg - 800 Dual Tire Option	
24	N37050	Tow Behind Hitch Frame - 9365 & 9450 Only	1
24A	N50500	Steerable Hitch Frame - Quad Steer	1
25	N37055	Frame Coupler Plate	2
26	N37060	Castor Cap	1
27	N37065	Wear Washer - 1/4	1
30	R480034	Hose - 0.929 ID x 1.169 OD x 28 Lg	1
31	N37301	Hex Bolt - 1/2 x 6 1/2 Lg (32 Tires)	2
32	W-1553	Hex Bolt - 3/4 x 2 1/4 Lg	31
33	N32871	Spindle - 4.5 Dia (32 Tires)	2
34	W-480	Hex Bolt - 3/8 x 2 1/2 Lg	4
35	W-495	Hex Bolt - 1/2 x 4 Lg	2
37	**N58879**	**Shim Plate (Used between items 16, 13A and 14A) - As Required**	**4**
38	W-499	Hex Bolt - 5/8 x 2 Lg	5
39	W-501	Hex Bolt - 5/8 x 2 1/2 Lg	3
40	W-514	Hex Nut - 3/8	4
41	W-517	Hex Nut - 5/8	14
42	W-518	Hex Nut - 3/4	44
43	W-523	Lockwasher - 3/8	4
44	W-526	Lockwasher - 5/8	14
45	W-527	Lockwasher - 3/4	45
		9535 Quad Steer Axle (Option 9365 & 9450) - Prior to 2021	
46	N44580	Axle Assembly - Quad Steer - See page 4-18 for details	1
47	N44536	Pivot Shaft	1
48	N50949	Carriage Bolt - 3/4 x 5 1/2 Lg	4
49	C-4709	Hex Bolt - 3/4 x 7 1/2 Lg	1
50	J12344	Hex Bolt - 1 x 3 Lg	4
51	W-518	Hex Nut - 3/4	4
52	**N58870**	**Pivot Mount**	**1**
53	N50925	Rear Spindle Mount	1
54	N36225	Polygon Bushing - 4.513 ID x 5.095 OD x 4 LG	2
55	N36228	Dust Seal - 4.5 ID x 5.256 OD	2
56	N44584	Thrust Washer - 4 17/32 ID x 6 1/2 OD x 1/4 Thick	2
57	W-527	Lockwasher - 3/4	4
58	D-5498	Flat Washer - 1 1/16 ID x 2 OD	4
59	T-5276	Hex Locknut - 1	4
60	D-5273	Locknut - 3/4	1

Frame - Tow Behind
9445, 9550 and 9650 - Prior to 2016

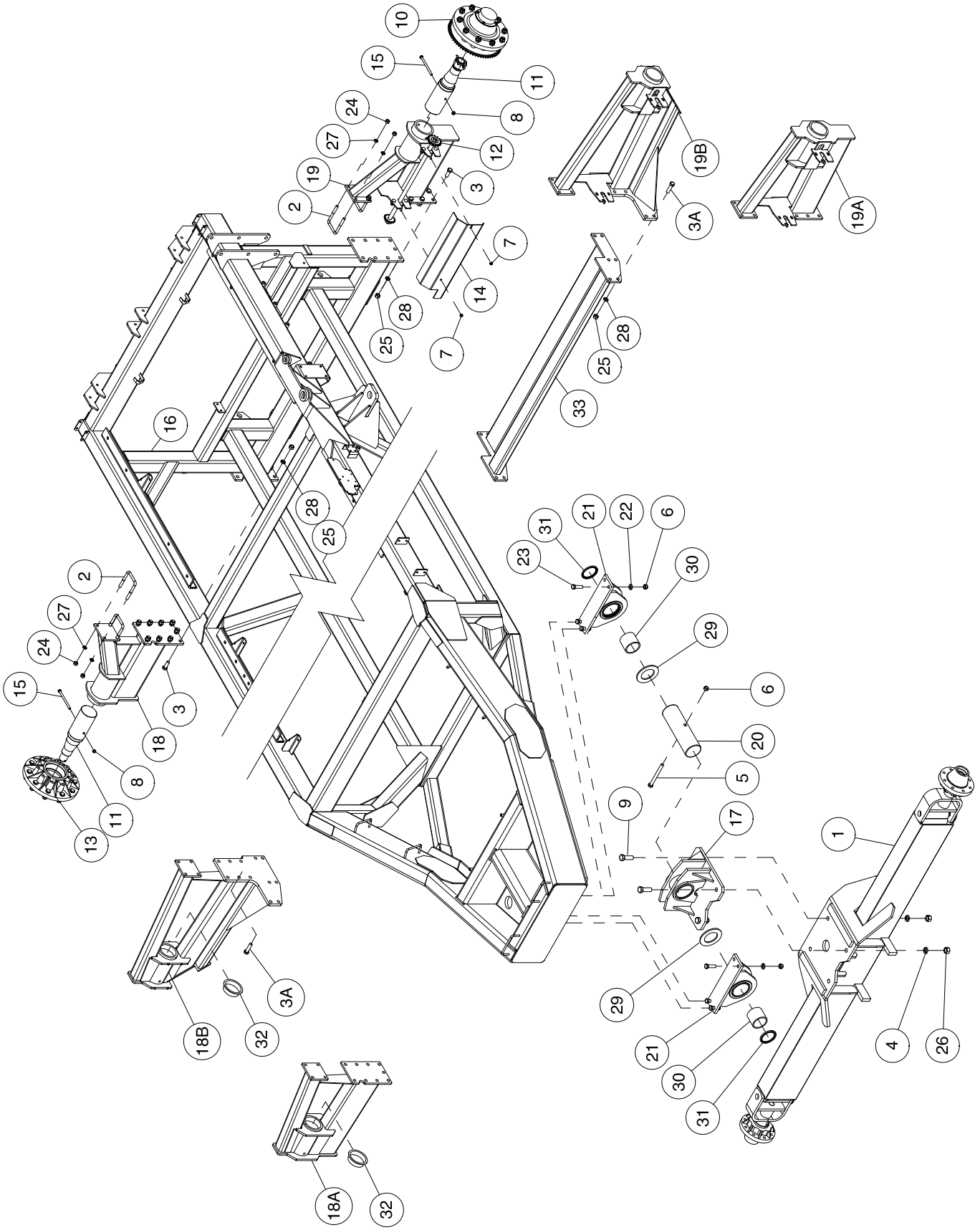

Frame - Tow Behind - 9445, 9550 and 9650 - Prior to 2016

Item	Part No.	Description	Qty
1	N44580	Axle Assembly - See page 4-18 for details Serial number break: 9445 prior to Serial # 9445155811 9550 prior to Serial # 9550154821 9650 prior to Serial # 9650152842	1
2	C-219	U-Bolt - 5/8 x 4 x 5-9/16	4
3	C-695	Hex Bolt - 3/4 x 2 Lg	18
3A	W-509	Hex Bolt - 3/4 x 2 1/2 Lg - 800 Dual Tire Option	24
4	C-705	Lockwasher - 1 Dia	4
5	C-4709	Hex Head Bolt - 3/4 x 7 1/2 Lg	1
6	D-5273	Hex Locknut - 3/4 - Grade 8 - Unitorque	9
7	D-5279	Flange Lock Nut - 3/8 Dia	2
8	F-3405	Locknut - 1/2 Unitorque	2
9	J12344	Hex Bolt - 1 x 3 Lg	4
10	* * * * *	Drive Hub (See Section 6)	1
11	N32871	Spindle - 4-1/2 Dia	2
12	N36039	Jackshaft Assembly - 30 7/8 Lg - Single Tires	1
	N44550	Jackshaft Assembly - 39 3/4 Lg - 520 Dual Tire Option	
	N50359	Jackshaft Assembly - 46 7/8 Lg - 800 Dual Tire Option	
13	* * * * *	Non Drive Hub (See Section 6)	2
14	N36342	Guard - Jackshaft - 27 1/2 Lg - Single Tires	1
	N45070	Guard - Jackshaft - 31 3/4 Lg - 520 Dual Tire Option	
	N50362	Guard - Jackshaft - 43 5/8 Lg - 800 Dual Tire Option	
15	N37301	Hex Bolt - 1/2 x 6 1/2 Lg	2
16	N50610	Main Frame - Large Frame Tow Behind	1
17	**N58870**	**Lower Pivot Mount**	**1**
18	N44531	Axle Extension - Right - Single Tires	1
18A	N45072	Axle Extension - Right - 520 Dual Tire Option	
	N55992	**Axle Extension - Right - 520 Dual Tire Option - 9650**	
18B	N53680	Axle Extension - Right - 800 Dual Tire Option	
19	N44532	Axle Extension - Left - Single Tires	1
19A	N45071	Axle Extension - Left - 520 Dual Tire Option	
	N55991	**Axle Extension - Left - 520 Dual Tire Option - 9650**	
19B	N53685	Axle Extension - Left - 800 Dual Tire Option	
20	N44536	Pivot Shaft - 4-1/2 Dia	1
21	N44525	Bearing Housing	2
	N44663	Upper Pivot Mount - Assembly (Includes Item 21, 30 and 31)	
22	W-476	Flat Washer - 3/4	8
23	N49653	Hex Bolt - 3/4 x 3 Lg - Grade 8	8
24	W-517	Hex Nut - 5/8	8
25	W-518	Hex Nut - 3/4	18
	W-518	Hex Nut - 3/4 - 800 Dual Tire Option	24
26	W-520	Hex Nut - 1	4
27	W-526	Lockwasher - 5/8	8
28	W-527	Lockwasher - 3/4	18
	W-527	Lockwasher - 3/4 - 800 Dual Tire Option	24
29	N44584	Thrust Washer - 4 17/32 ID x 6 1/2 OD x 1/4 Thick	2
30	N36225	Polygon Bushing - 4.512 ID x 5.095 OD x 4 Lg	2
31	N36228	Dust Seal - CR44913	2
32	N45522	End Plug - Plastic	2
33	**N53580**	Crose Brace - 800 Dual Tire Option	1
	N58879	Shim Plate (Not Shown) (Used between items 33 and 19B)	

Frame - Tow Between 9365 and 9450

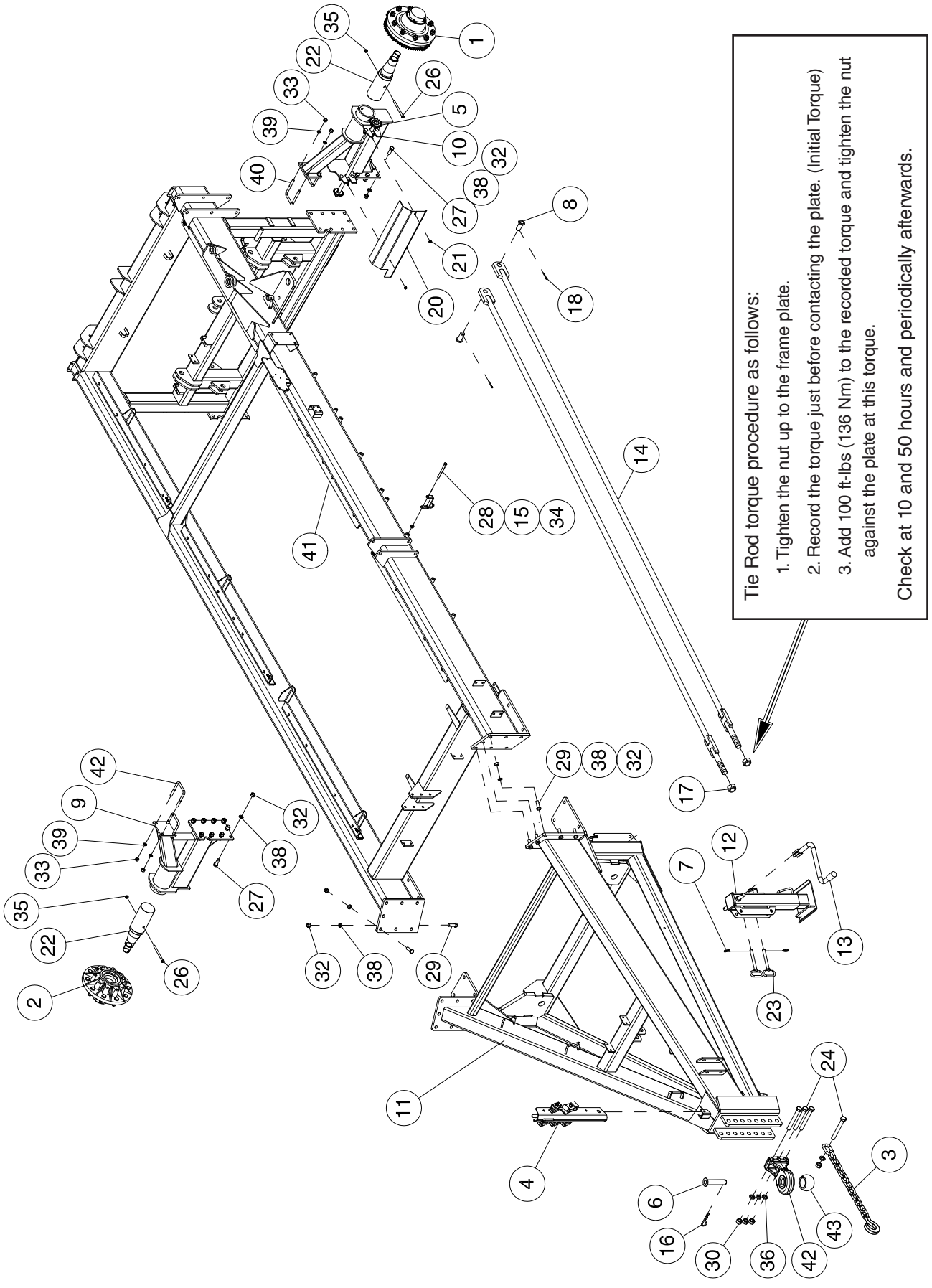

Frame - Tow Between - 9365 and 9450

Item	Part No.	Description	Qty
1	* * * * *	Drive Hub (See Section 6)	1
2	* * * * *	Non Drive Hub (See Section 6)	1
3	N44710	Chain Safety Ag - 80,000 Lb	1
4	* * * * *	Hose Holder(See Page 4-30)	1
5	* * * * *	Jack Shaft (See Section 7)	1
6	N49640	Pin - 1 1/2 Dia x 6 1/2 UL	1
7	N19307	Klik Pin - 1/4 x 1 3/4 Lg	2
8	N28997	Pin - 1 1/4 Dia x 2 1/4 Lg	2
9	**N69735**	**3M STUB AXLE - Right - 9365/9450 - 2023 to present**	**1**
	N36691	Axle Extension - Right (32 Tires)	1
	N45072	Axle Extension - Right - Dual Tire Option (N45522 - End Plug - Plastic)	1
10	**N69734**	**3M STUB AXLE - LEFT - 9365/9450 - 2023 to present**	**1**
	N36692	Axle Extension - Left (32 Tires)	1
	N45071	Axle Extension - Left - Dual Tire Option (N45522 - End Plug - Plastic)	1
11	N50920	Front Hitch Small Frame Tow Between Cart	1
12	N37393	Hitch Jack	1
13	N37760	Handle Kit	1
14	N51261	Tie Rod - 199 Lg to pin center	2
15	N37995	Scale Hook	1
16	P1318510	Hairpin - #19 - 1/4 x 4 3/8 Lg	1
17	N37349	Locknut - 1 1/2	2
18	W-4181	Cotter Pin - 1/4 x 2 Lg	2
20	N36342	Guard - Jackshaft (32 Tires)	1
	N45070	Guard - Jackshaft - Dual Tire Option	1
21	D-5279	Flange Lock Nut - 3/8	2
22	N32871	Spindle - 4 1/2 Dia (32 Tires)	2
	N37445	Spindle - 3 Dia (26 Tires)	2
23	S33404	Auger Lock Pin - 3/4	2
24	C18597	Hex Head Bolt - 1 x 8 Lg	4
26	N37301	Hex Bolt - 1/2 x 6 1/2 Lg	2
27	C-695	Hex Bolt - 3/4 x 2 Lg (32 Tires)	18
28	W-496	Hex Bolt - 1/2 x 5 1/2 Lg	1
29	W-1553	Hex Head Bolt - 3/4 x 2 1/4 Lg	22
30	W-520	Hex Nut - 1	4
31	W-516	Hex Nut - 1/2	4
32	W-518	Hex Nut - 3/4 (32 Tires)	40
33	W-517	Hex Nut - 5/8	8
34	N37907	Locknut - 1/2 Flange	1
35	F-3405	Locknut - 1/2 Unitorque	2
36	C-705	Lockwasher - 1	4
37	W-525	Lockwasher - 1/2	4
38	W-527	Lockwasher - 3/4 (32 Tires)	40
39	W-526	Lockwasher - 5/8	8
40	C-219	U-Bolt - 5/8 x 4 x 5 9/16	4
41	N48990	Main Frame - Small Frame	1
42	K62145	Clevis - CAT 4 (2 Pin Diameter Draw Pin) (Includes item 43)	1
42A	S64310	Clevis - CAT 5 (2 3/4 Diameter Draw Pin) (Includes item 43A)	
43	S67388	Clevis Insert - CAT 4 - (2 Diameter Draw Pin)	
43A	S65742	Clevis Insert - CAT 5 - (2 3/4 Diameter Draw Pin)	

Frame - Tow Between
9445, 9550 and 9650 - Prior to 2016

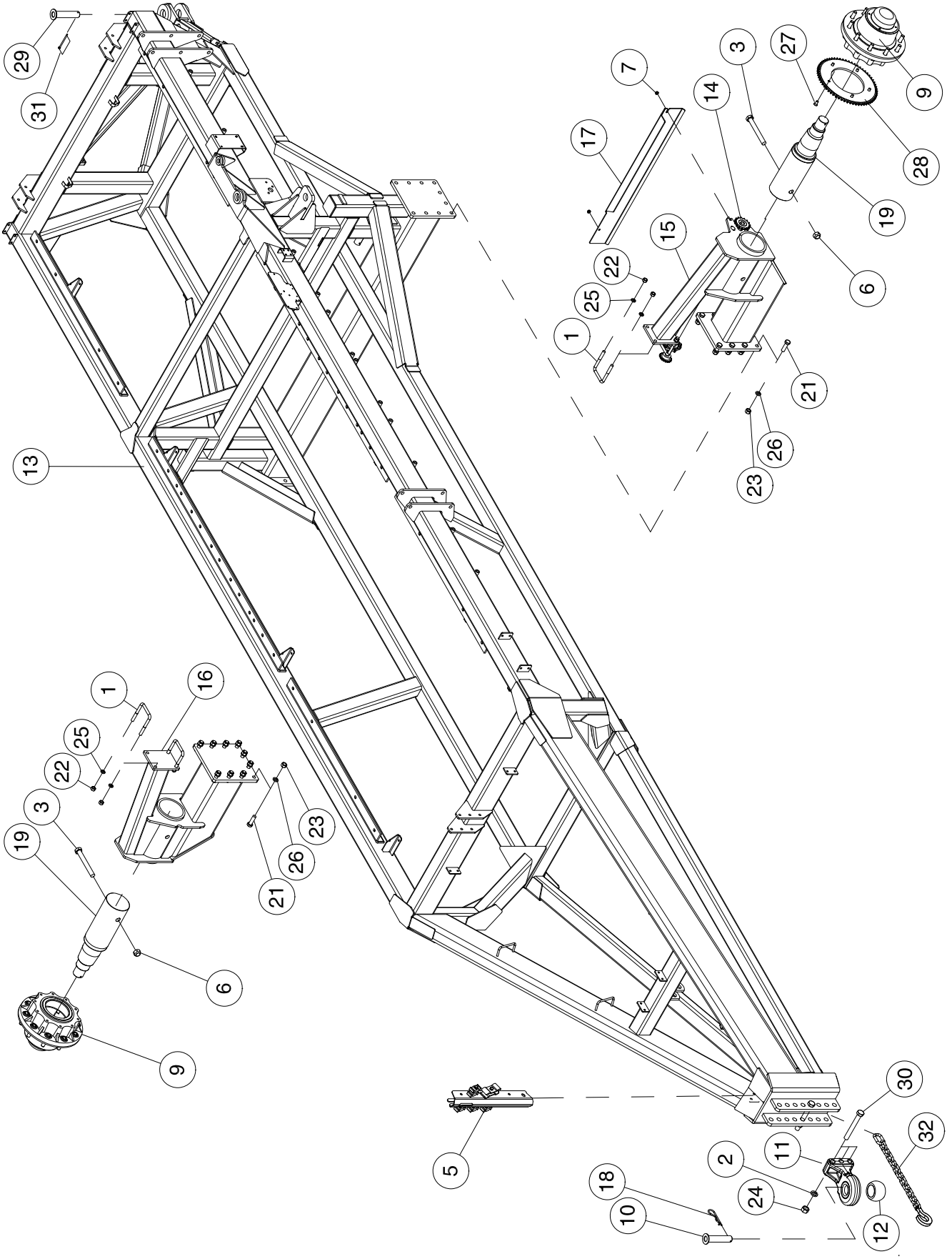

Frame - Tow Between - 9445, 9550 and 9650 - Prior to 2016

Item	Part No.	Description	Qty
1	C-219	U-Bolt - 5/8 x 4 x 5 9/16	4
2	C-705	Lockwasher - 1	3
3	N49643	Hex Bolt - 1 x 9 Lg	2
5	* * * * *	Hose Holder(See Page 4-30)	1
6	D-5274	Locknut - 1 Unitorque	2
7	D-5279	Locknut - 3/8 Serrated Flange	2
9	N49595	Axle Hub - 6” - 30,000 Lbs	2
10	N15049	Pin - 1 1/2 Dia x 6 1/2 UL	1
11	**K62145**	**Clevis - CAT 4 (2 Pin Diameter Draw Pin) (Includes item 12)**	**1**
11A	**S64310**	**Clevis - CAT 5 (2 3/4 Diameter Draw Pin) (Includes item 12A)**	
12	**S67388**	**Clevis Insert - CAT 4 - (2 Diameter Draw Pin)**	
12A	**S65742**	**Clevis Insert - CAT 5 - (2 3/4 Diameter Draw Pin)**	
13	N50630	Main Frame - Large Frame Tow Between	1
14	N48900	Jackshaft Assembly - 44 7/8 Lg	1
15	N50625	Axle Extension - Drive Side - 32 Lg	1
16	N50626	Axle Extension - Non Drive Side - 32 Lg	1
17	N48949	Guard - Jackshaft	1
18	P1318510	Hairpin - #19	9
19	N49596	Spindle - 6” - 30,000 Lbs.	2
21	W-509	Hex Bolt - 3/4 x 2 1/2 Lg	20
22	W-517	Hex Nut - 5/8	8
23	W-518	Hex Nut - 3/4	20
24	W-520	Hex Nut - 1	3
25	W-526	Lockwasher - 5/8	8
26	W-527	Lockwasher - 3/4	20
27	N19230	Hex Socket Cap Screw - 1/2 x 1 Lg	5
28	N48075	Sprocket - 60A63 - 8.563 Dia Bore	1
29	N49635	Pin - 2 Dia x 6 1/2 UL - Rear Tow Hitch (Not Shown)	1
30	C18597	Hex Head Bolt - 1 x 8 Lg	3
31	C13447	Quick Pin - 5/16 Dia	1
32	N44710	Chain - 80,000 Lbs	1

Frame
9445, 9550 and 9650 - 2016 to Present

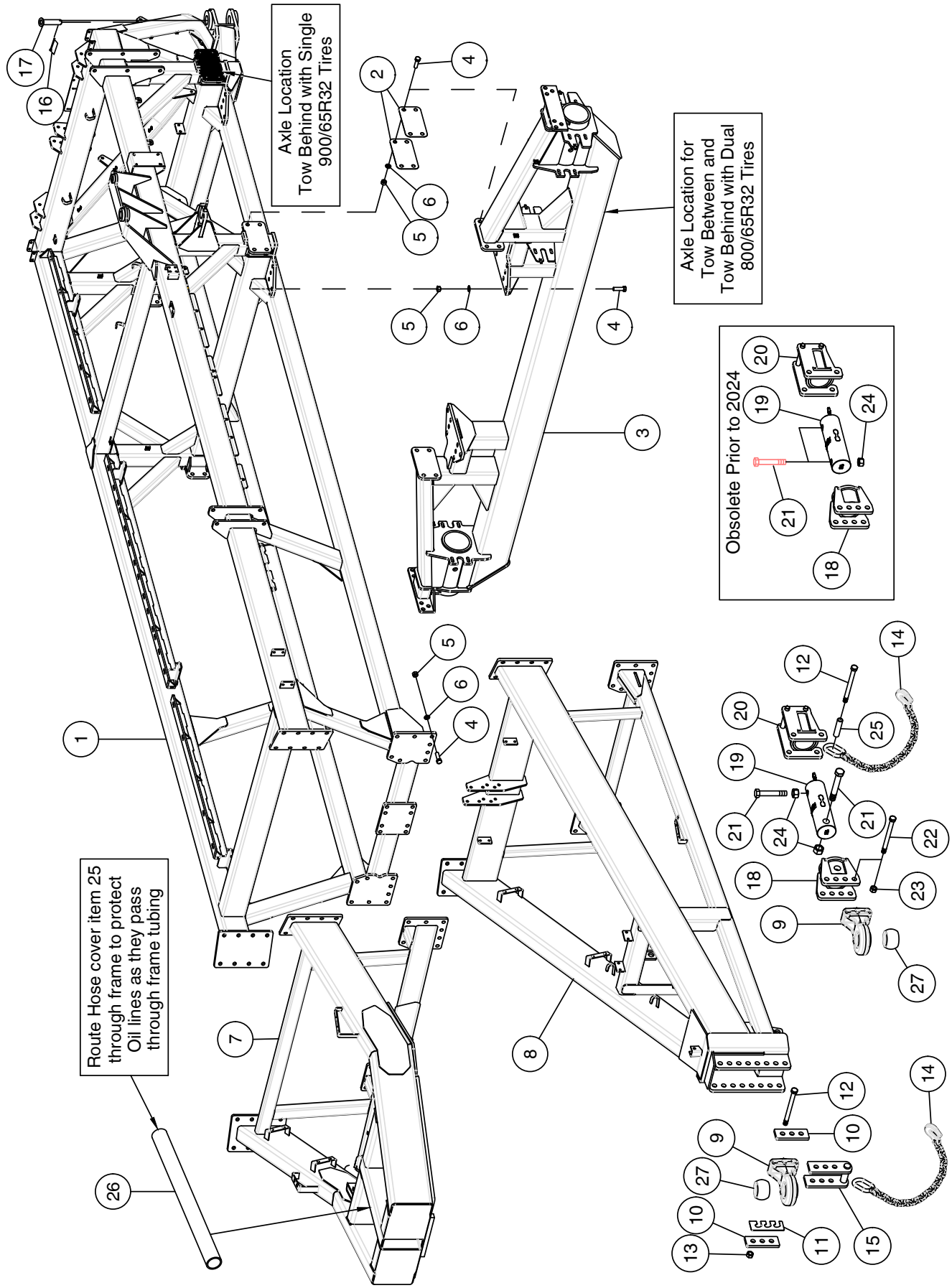

Frame - 9445, 9550 and 9650 - 2016 to Present

Item	Part No.	Description	Qty
1	**N55100**	**Main Frame - 9650 - 2016 to Present**	**1**
2	N51840	Shim Plate	4
3	**N55120**	**Axle - Rear Frame - 9650 - 2016 to Present**	**1**
	N60550	**Axle - Rear Frame - 9650 - Narrow Transport**	**1**
4	W-509	Hex Bolt - 3/4 x 2 1/2 LG	56
5	W-518	Hex Nut - 3/4	56
6	W-527	Lockwasher - 3/4	56
7	N55105	Front Frame - 9650 Tow Behind **- 2016 to Present**	1
8	N55110	Front Frame - 9650 Tow Between **- 2016 to Present**	1
		Tow-Between - Hitch	
9	**K62145**	**Clevis - CAT 4 (2 Pin Diameter Draw Pin) (Includes item 26)**	**1**
9A	**S64310**	**Clevis - CAT 5 (2 3/4 Diameter Draw Pin) (Includes item 26A)**	
10	N68530	Plate - Clevis Bracket - 5/8 thick	4
11	N68531	Shim Plate - 1/8 thick	1
12	K53438	Hex Bolt - 1 x 11 Lg GR.8	3
13	D-5274	Lock Nut - 1	3
14	N44710	Chain Safety Ag - 80,000 Lb	1
15	N71425	Bracket - Safety Chain	1
16	C13447	Quick Pin - 5/16 Dia	1
17	N59075	Pin - 2 Dia x 7 1/2 UL - Rear Tow Hitch	1
		DIGI-STAR - Tow Between	
18	N53780	Bracket - Load Cell	1
19	N73327	Load Cell -2024 to Present	1
	N53775	Load Cell - Obsolete - To use N73327, Bracket N53780 needs replacing with new hole orientation.	
20	N53740	Bracket - Load Cell	1
21	S44715	Hex Bolt - 1 1/4 x 8 Lg	2
22	C18597	Hex Bolt - 1 x 8 Lg	3
23	D-5274	Lock Nut - 1	3
24	S39780	Lock Nut - 1 1/4	2
25	N64746	Spacer - 1.02 ID x 1 1/2 OD x 6 1/2 Lg	1
26	N62246	Hydraulic Hose Sleeve - 3” Dia x 36” Lg	1
27	**S67388**	**Clevis Insert - CAT 4 - (2 Diameter Draw Pin)**	
27A	**S65742**	**Clevis Insert - CAT 5 - (2 3/4 Diameter Draw Pin)**	

Frame
9800 and 91000

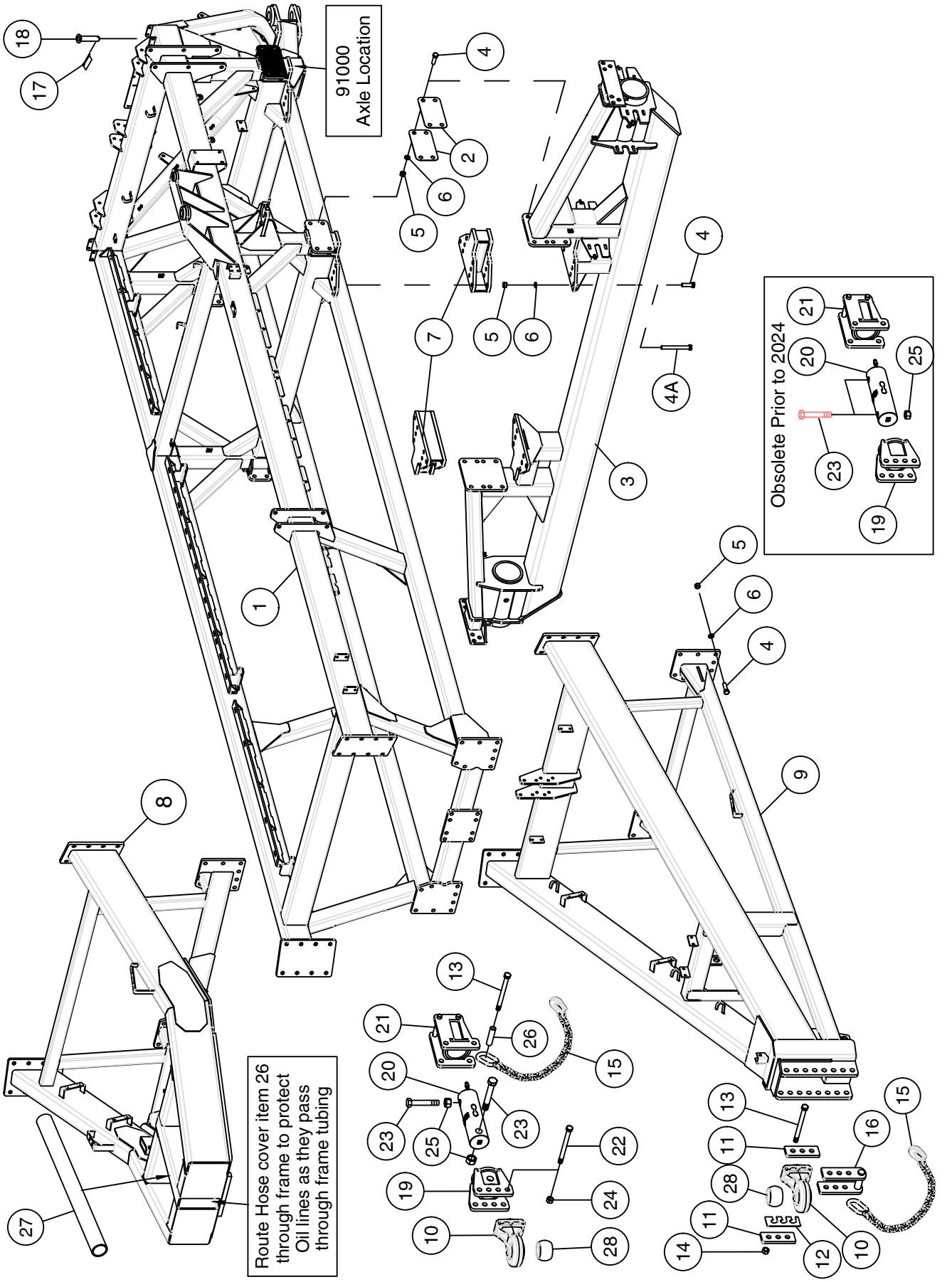

Frame - 9800 and 91000

Item	Part No.	Description	Qty
1	N51610	Main Frame - 9800 and 91000	1
2	N51840	Shim Plate	4
3	N60350	Axle - Rear Frame - 9800 and 91000	1
	N71520	Axle - Rear Frame - 9555 and 9680 - VRT and ICT ONLY - **Australia ONLY**	
4	W-509	Hex Bolt - 3/4 x 2 1/2 Lg	56
4A	C-3917	Hex Bolt - 3/4 x 7 Lg - Used only with the 850/70R38 Tire Option	16
5	W-518	Hex Nut - 3/4	56
6	W-527	Lockwasher - 3/4	56
7	N51630	Bracket - Axle Spacer - Used only with the 850/70R38 Tire Option **- 9800 only**	2
8	N51615	Front Frame - Tow Behind - 9800 and 91000	1
9	N53745	Front Frame - Tow Between - 9800 Only	1
		Tow-Between - Hitch	
10	**S64310**	**Clevis - CAT 5 (2 3/4 Diameter Draw Pin) (Includes item 28)**	**1**
11	N68530	Plate - Clevis Bracket - 5/8 thick	4
12	N68531	Shim Plate - 1/8 thick	1
13	K53438	Hex Bolt - 1 x 11 Lg GR.8	3
14	D-5274	Lock Nut - 1	3
15	N44710	Chain Safety Ag - 80,000 Lb	1
16	N71425	Bracket - Safety Chain	1
17	C13447	Quick Pin - 5/16 Dia	1
18	N59075	Pin - 2 Dia x 7 1/2 UL - Rear Tow Hitch	1
		DIGI-STAR - Tow Between	
19	N53780	Bracket - Load Cell	1
20	N73327	Load Cell -2024 to Present	1
	N53775	Load Cell - Obsolete - To use N73327, Bracket N53780 needs replacing with new hole orientation.	
21	N53740	Bracket - Load Cell	1
22	C18597	Hex Bolt - 1 x 8 Lg	3
23	S44715	Hex Bolt - 1 1/4 x 8 Lg	2
24	D-5274	Lock Nut - 1	3
25	S39780	Lock Nut - 1 1/4	2
26	N64746	Spacer - 1.02 ID x 1 1/2 OD x 6 1/2 Lg	1
27	N62246	Hydraulic Hose Sleeve - 3” Dia x 36” Lg	1
28	**S65742**	**Clevis Insert - CAT 5 - (2 3/4 Diameter Draw Pin)**	

Rear Axle Assembly
9445, 9550 and 9650 - 2016 to Present

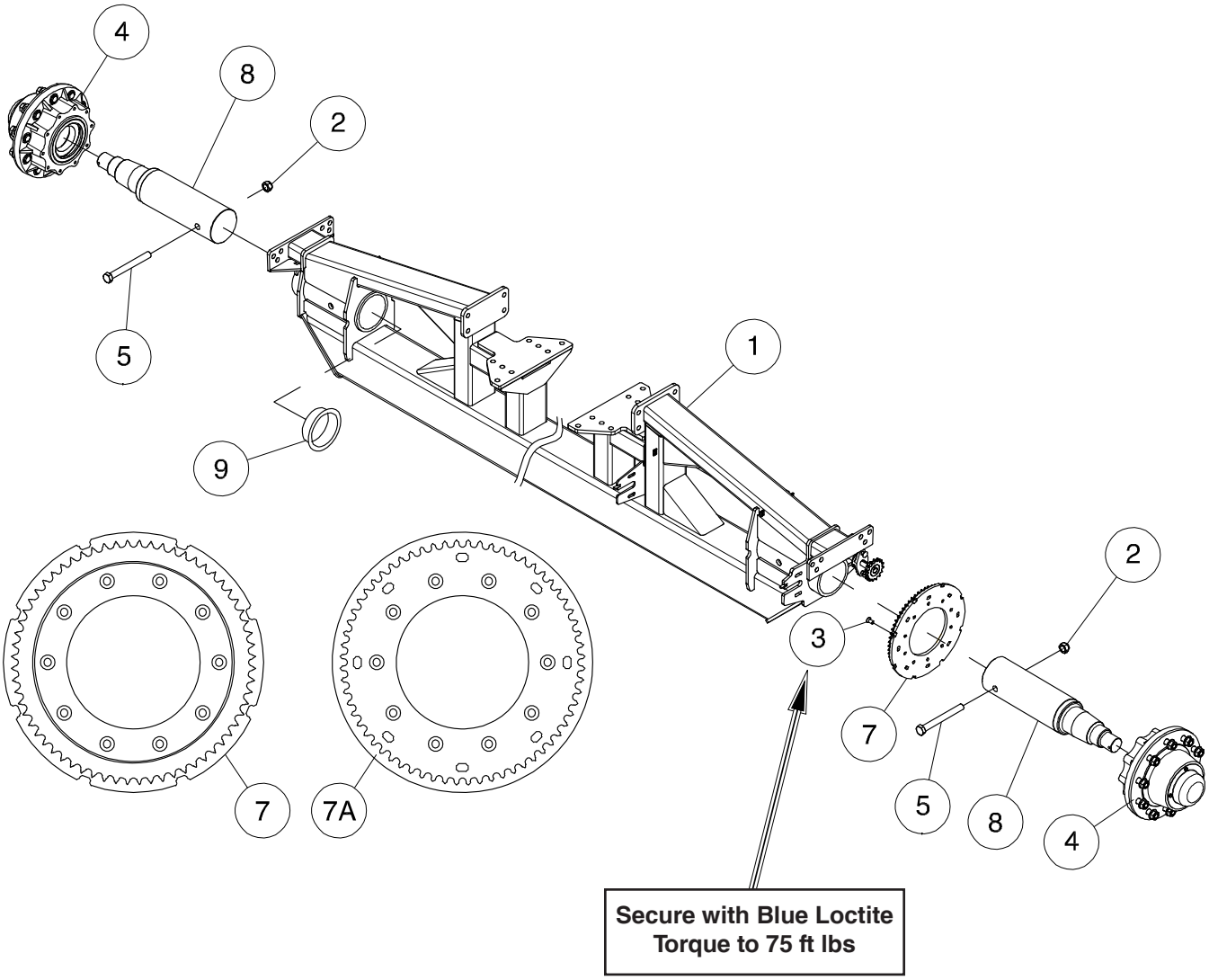

Item	Part No.	Description	Qty
1	N55120	Axle - Rear Frame - 9650 - 2016 to Present	1
	N60550	Axle - Rear Frame - 9650 - **Narrow Transport**	1
2	D-5274	Unitorque Locknut - 1	2
3	N19230	Hex Cap Screw - 1/2	20
4	N53655	Hub Assembly - 30,000 lbs - 9445, 9550 and 9650 for 2016 to present	2
	N53665	**DIGI-STAR Hub & Spindle Assembly - 30,000 lbs**	
5	N49643	Hex Bolt - 1 x 9 Lg	2
6	* * * * *		
7	N62730	Drive Rotor - **VR Drive** w/Sprocket (60A64 - 13” Dia Bore)	1
	N62732	Drive Rotor - **Ground Drive** w/Sprocket (60A64 - 13” Dia Bore)	1
8	N53660	Spindle - 6” Dia - 30,000 lbs - 9445, 9550 and 9650 for 2016 to present	2
	N53364	**Spindle - 6 Dia - 30,000 lbs - DIGI-STAR**	
9	N59992	Plastic Plug	2

Rear Axle Assembly
9800 and 91000

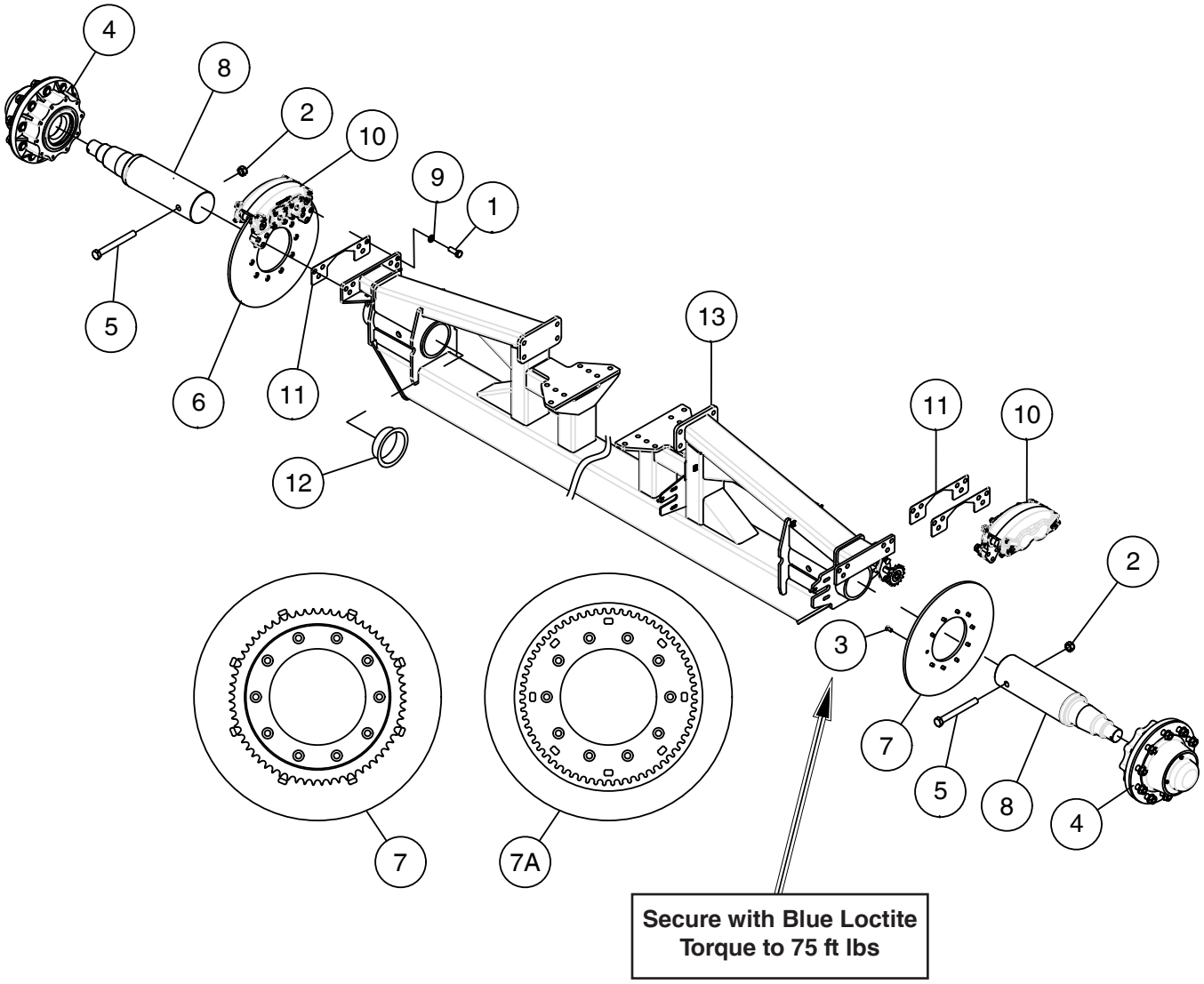

Item	Part No.	Description	Qty
1	C-695	Hex Bolt - 3/4 x 2 Lg	12
2	D-5274	Unitorque Locknut - 1	2
3	N19230	Hex Cap Screw - 1/2	20
4	N55202	Hub Assembly - 35,000 lbs - 9800 and 91000	2
	N55235	**DIGI-STAR Hub & Spindle Assembly - 35,000 lbs**	
5	N49643	Hex Bolt - 1 x 9 Lg	2
6	N51736	Brake Rotor - Non-Drive	1
7	**N51735**	**Brake Rotor - VR Drive (Sprocket 60A64 welded onto inside face)**	**1**
7A	N55230	Brake Rotor - Ground Drive (Inverted sprocket welded onto inside face)	1
8	N55206	Spindle - 6” Dia - 35,000 lbs - 9800 and 91000	2
	N55240	**Spindle - 6 Dia - 35,000 lbs - DIGI-STAR**	
9	W-527	Lockwasher - 3/4	12
10	N53389	Brake Caliper	2
11	N53588	Shim Plate - 22 Ga - Add shim as required for proper caliper setting	4
12	N59992	Plastic Plug	2
13	N60350	Axle - Rear Frame - 9800 and 91000	1
	N71520	Axle - Rear Frame - 9555 and 9680 - VRT and ICT ONLY - **Australia ONLY**	

Castor Axle
9365 and 9450 - Tow Behind

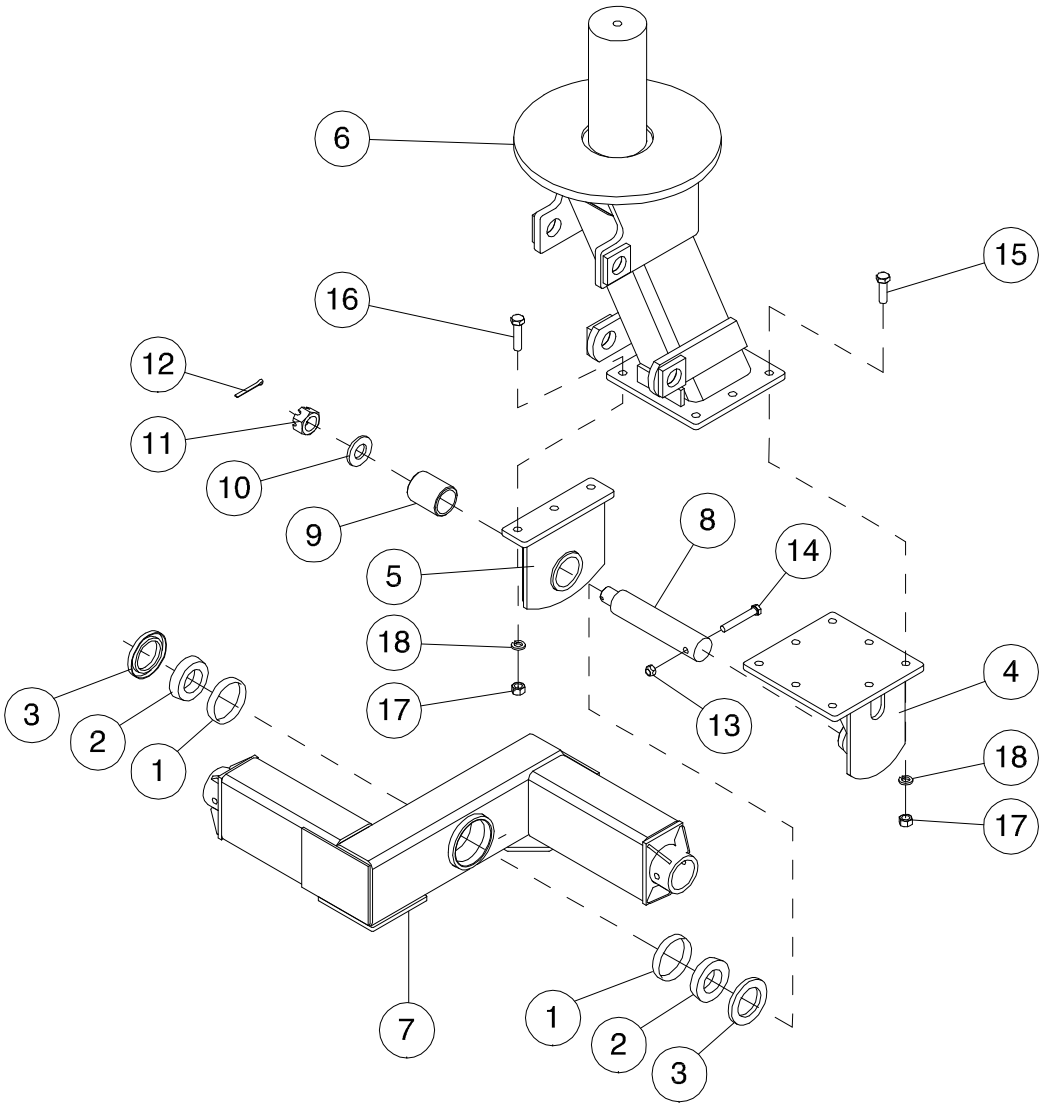

Item	Part No.	Description	Qty
1	N16028	Bearing Cup	2
2	N16030	Bearing Cone Outer	2
3	N16032	Seal	2
4	N36170	Spindle Mount	1
5	N36171	Spindle End Plate	1
6	N36178	Castor	1
7	N36186	Walking Axle	1
8	N21712	Shaft - 2 Dia	1
9	N36226	Bushing - 2 1/2 OD x 2 ID	1
10	N13962	Washer - 2 1/2 OD x 1 9/32 ID x 1/4	1
11	N19484	Hex Slotted Nut - 1 1/4 - 12 UNF	1
12	D-5239	Cotter Pin - 1/4 x 2 1/4 Lg	1
13	F-3405	Locknut - 1/2 Unitorque	1
14	W-493	Hex Bolt - 1/2 x 3 1/2 Lg	1
15	W-499	Hex Bolt - 5/8 x 2 Lg	3
16	W-501	Hex Bolt - 5/8 x 2 1/2 Lg	3
17	W-517	Hex Nut - 5/8	6
18	W-526	Lockwasher - 5/8	6

Quad Steer Axle
Tongue Support - 9365, 9450 and 9535
Tongue Support - 9445, 9550 and 9650 - Prior to 2015

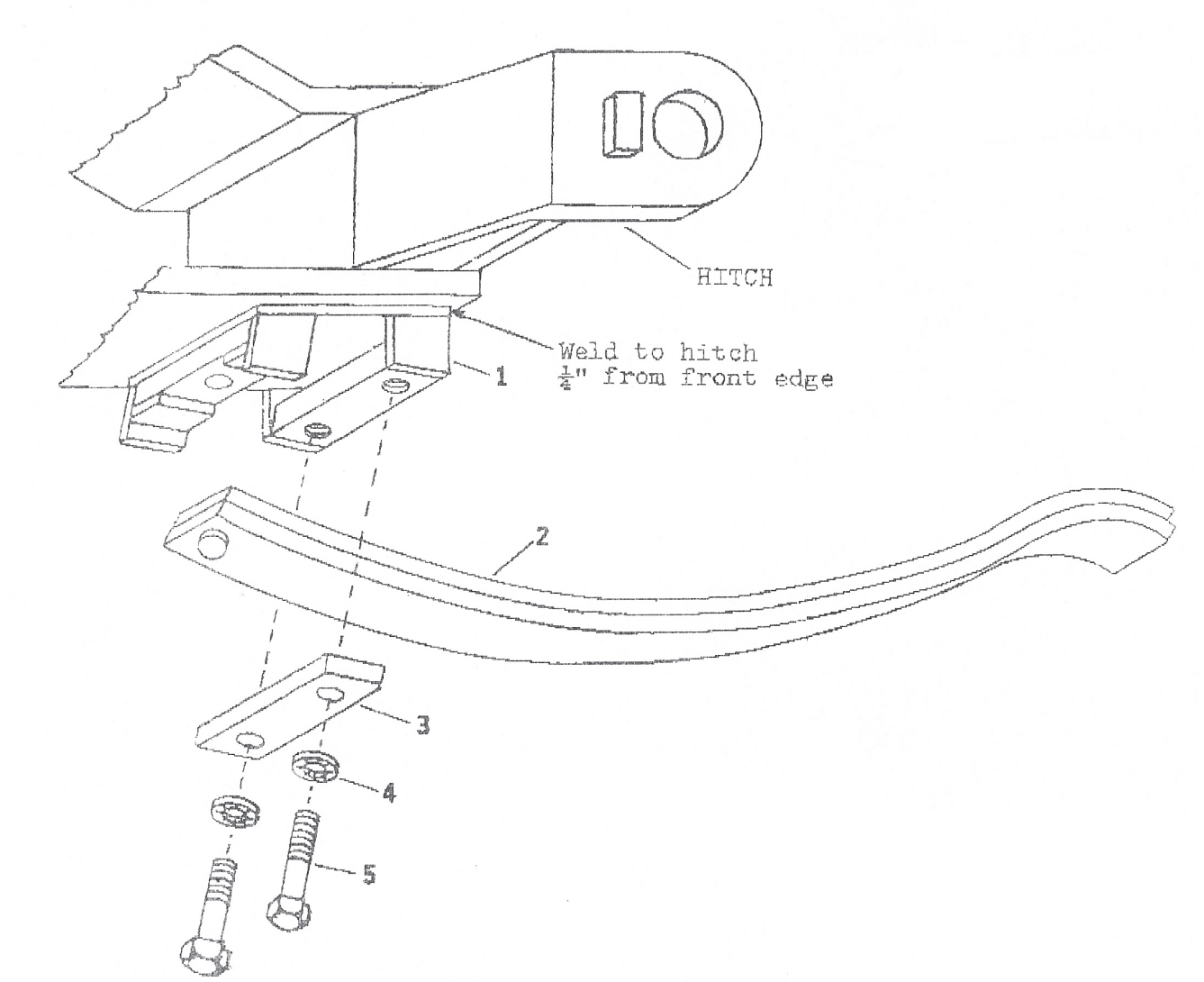

Item	Part No.	Description	Qty
1	1060-3	Tongue Spring Support Assembly	1
2	733-3	Double Tongue Spring Assembly	1
3	399-4	Clamping Bar	1
4	458-2	Star Washer - 1/2	2
5	229-2	Cap Screw - 1/2-20UNF x 2 1/8 Grade 5	2

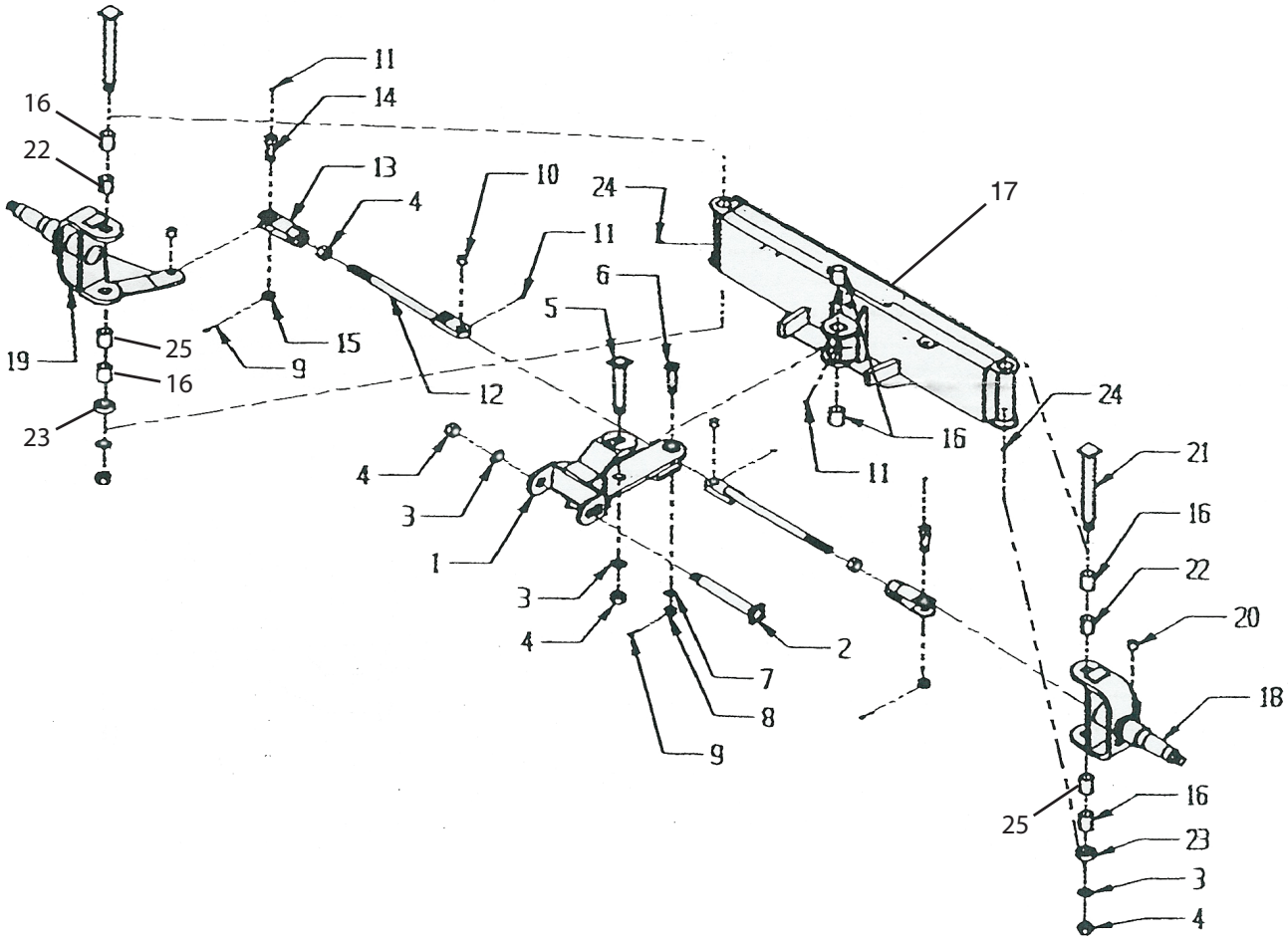

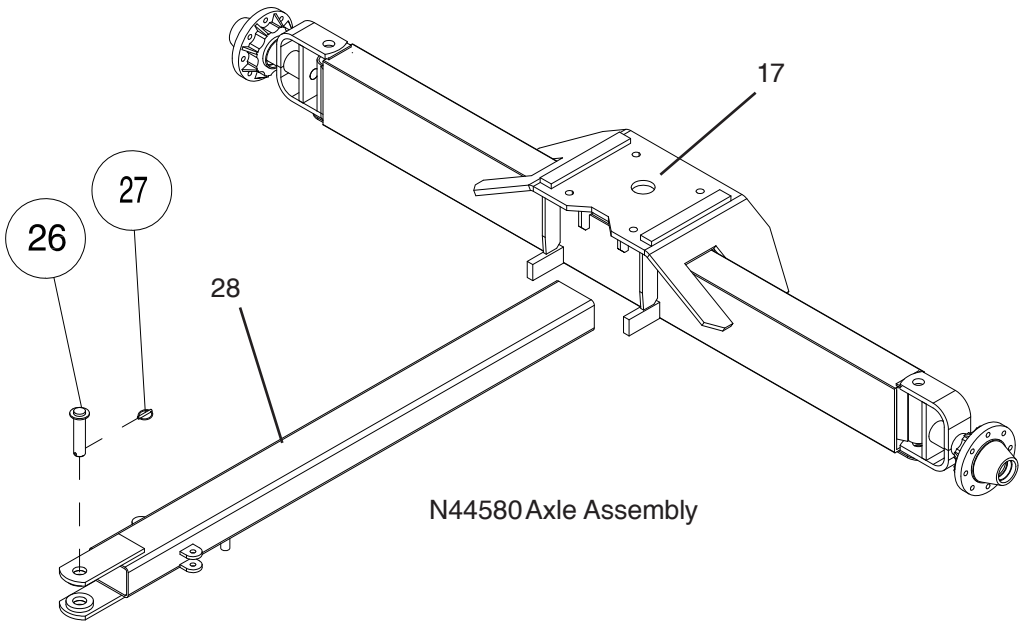

N44580 Axle Assembly

Quad Steer Axle
9365, 9450 and 9535 - Prior to 2021
9445, 9550 and 9650 - Prior to 2015

Item	Part No.	Description	Qty
1	N50926	Kit - Steer Link - Quad Hitch	
	3-1286-3	Hitch Bracket	1
2	3-206-3A	Hinge Bolt - 1 3/4 x 13 7/8, 1 1/4-12UNF Thread	1
	3-0206-3	Hinge Bolt - 1 3/4 x 12 7/8, 1 1/4-12UNF Thread	1
3	2-0422-2	Lock Washer - Internal Toothe - 1 1/4	5
4	2-0104-2	Nut, Jam - 1 1/4-12UNF	7
5	3-0705-3	King Bolt - 1 3/4 x 9 1/8, 1 1/4-12UNF Thread	1
6	3-1287-3	Center Tie Rod Bolt - 1 1/8 x 4 9/16, 7/8-14UNF Thread	1
7	2-0280-2	Flat Washer - 7/8, SAE	1
8	2-0282-2	Slotted Nut - 7/8-14UNF	1
9	W-532	Cotter Key - 3/16 x 1 1/4	3
10	1-0431-1	Bushing - 1 1/8 ID x 1 1/4 OD x 1 LG	2
11	S-752	Grease Fitting, Straight - 1/4-28UNF	6
12	3-1433-3A	Tie Rod Assembly	2
13	3-0648-3	Clevis Assembly	2
14	3-0652-3	Clevis Bolt - 1-14UNF x 3 3/16	2
15	S-1311	Slotted Nut - 1-14UNF	2
16	1-0404-1	Bushing - 1 3/4 ID x 2 OD x 2 1/2 LG	8
17	N45207	Front Axle Beam - W2000	1
18	3-1431-3	Trunnion Assembly - Left	1
19	3-1432-3	Trunnion Assembly - Right	1
20	1-0427-1	Bushing - 1 ID x 1 1/4 OD x 1 1/8 LG	2
21	3-1434-3	Trunnion Bolt - 1 3/4 Dia x 13 11/16, 1 1/4-12UNF Thread	2
22	995-8	Bushing with Grease Groove - 1 3/4 ID x 2 OD x 2 LG	2
23	1-0822-1	Thrust Bearing - T-177	2
24	F-3009	Grease Fitting, 45 Degree - 1/4-28NF	2
25	995-8A	Bushing with Grease Groove - 1 3/4 ID x 2 OD x 2 1/2 LG	2
26	N37417	Pin - 1 1/2 Dia x 5 5/8 UL	1
27	N37162	Klik Pin - 5/16 Dia x 2 11/32 Lg	1
28	N45205	Hitch Beam - 84 Lg	1
	N49560	Hitch Beam - 108 Lg - MAX II ONLY	
	N65689	Bushing - 1 3/4 ID x 2 OD x 2 Lg - 2 required per Hitch Beam	
		Not Shown - See page 6-3	
	1-0559-1	Hub with Studs and Cups	
	1-0759-1	Complete Hub Assembly	
	N44580	Axle Assembly - Includes All above Items except 26 and 27	

Quad Steer Axle
9365, 9450 and 9535 - 2021 to Present

Note: Do not use grease on any components.

Apply a thin layer of oil onto seal lips of Dust Seal item #11 to ease in the installation of pivot pin.

Torque King Pin item #19 to 150 ft lbs.

Coat spindle with an anti-seize compound.

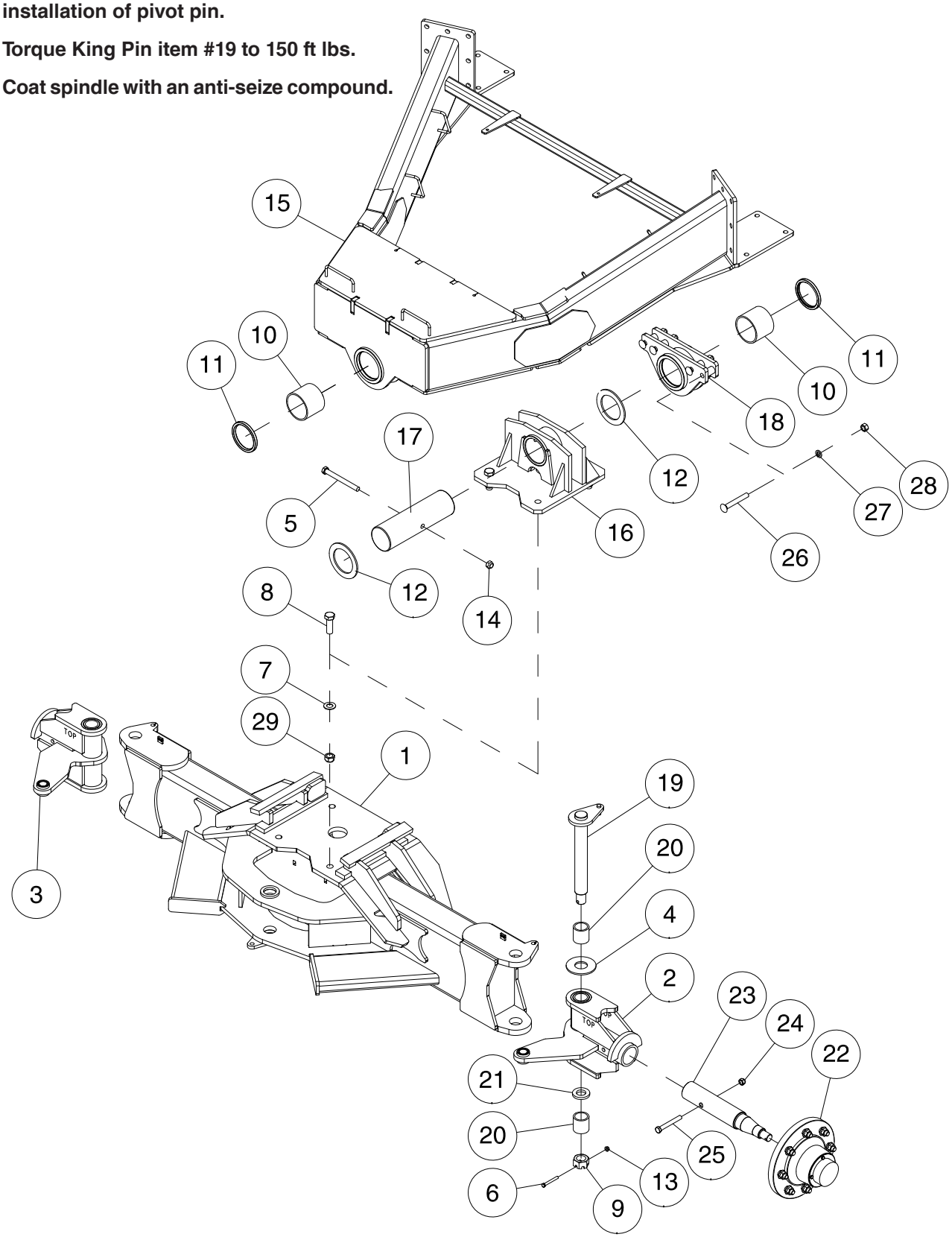

Quad Steer Axle - 9365, 9450 and 9535 - 2021 to Present

Item	Part No.	Description	Qty
1	N69650	Front Axle - 3m	1
	N69659	9535 Quad Steer Axle - Assembly - 3m	
2	N69655	Spindle Trunion - 12,000 Lb - Left	1
3	N69656	Spindle Trunion - 12,000 Lb - Right	1
4	N55610	Wear Washer - 2 1/32 ID x 4 3/4 OD x 1/4 Thick	2
5	C-4709	Hex Bolt - 3/4 x 7 1/2 Lg	1
6	W-1854	Hex Bolt - 3/8 x 3 Lg	2
7	D-5498	Washer - 1-1/16 ID x 2 OD x 11 Ga	4
8	J12344	Hex Bolt - 1 x 3 Lg	4
9	N21728	Hex Slotted Nut - 1 1/2 - 12 UNF	2
10	N36225	Bushing - 4.510 ID x 5.094 OD x 4 Lg	2
11	N36228	Dust Seal	2
12	N44584	Thrust Washer - 4 17/32 ID x 6 1/2 OD x 1/4 Thick	2
13	S27987	Locknut Flanged - 3/8 Center Lock	2
14	D-5273	Locknut - 3/4 Unitorque	1
15	N50500	Front Frame - Quad Steer	1
16	N58870	Pivot Mount	1
17	N44536	Main Pivot Shaft	1
18	N50925	Rear Spindle Mount	1
19	N53105	King Pin - 2 Dia x 14 UL	2
20	N53108	King Pin Bushing - 2 ID x 2 1/4 OD x 2-1/2 Lg	4
21	AFW-85	Washer - 1 17/32 ID x 2 3/4 OD x 3/8	2
22	N53878	Hub Assembly - 12,000 Lb (Includes Item 23)	2
22A	N53879	Hub Assembly - DIGI-STAR - (Includes Item 23A)	
23	N70815	Spindle - 3 Dia - 12,000 Lb Hub	2
23A	N55145	Spindle - DIGI-STAR	
24	S-1197	Locknut - 5/8 Unitorque	2
25	W-505	Hex Bolt - 5/8 x 4 3/4 Lg	2
26	N50949	Carriage Bolt - 3/4 x 5 1/2 Lg	4
27	W-527	Lockwasher - 3/4	4
28	W-518	Hex Nut - 3/4	4
29	T-5276	Locknut - 1	4

Serial number break:
9365 Serial # 9365211871 and newer.
9450 Serial # 9450213961 and newer.
9535 Serial # 9535216851 and newer.

Quad Steer Axle
9365, 9450 and 9535 - 2021 to Present

Note: Do not use grease on any components.

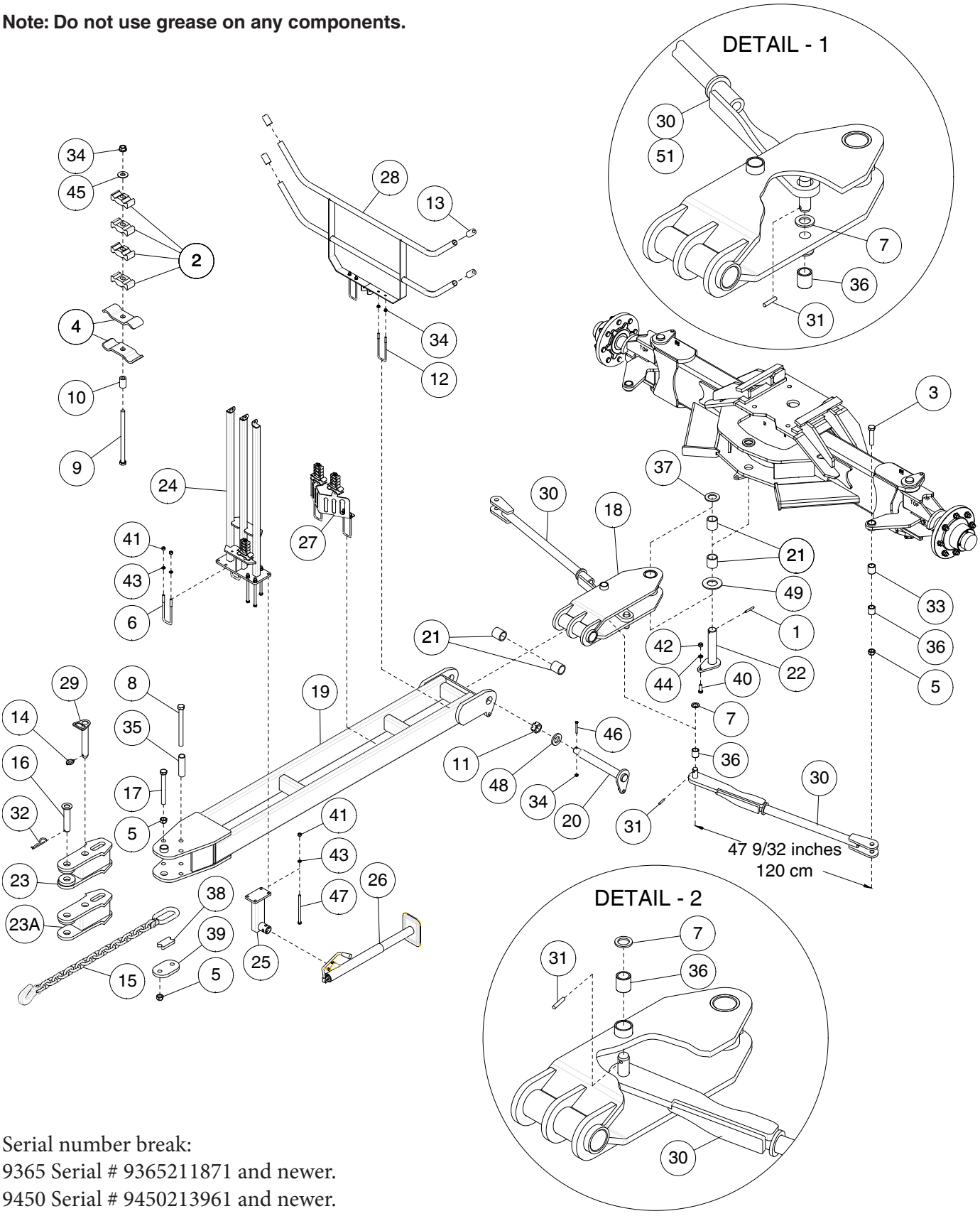

Serial number break:
9365 Serial # 9365211871 and newer.
9450 Serial # 9450213961 and newer.
9535 Serial # 9535216851 and newer.

Quad Steer Hitch - 9365, 9450 and 9535 - 2021 to Present

Item	Part No.	Description	Qty
1	C-728	Spiral Pin - 3/8 Dia x 2 3/4 Lg	1
2	C-4698	Oil Line Clamp Bracket	16
3	C12609	Hex Bolt - 1 x 4 1/2 Lg	2
4	D-4808	Hose Support Clamp	8
5	D-5274	Locknut - 1” Unitorque	5
6	H-4321	U-Bolt - 1/2 x 2 1/16 x 7 1/4	2
7	H-4693	Washer - 1 15/16 OD x 1 9/32 ID x 3/16	2
8	K53438	Hex Bolt - 1 x 11 Lg GR.8	2
9	N11461	Hex Bolt - 3/8 x 6 Lg	4
10	N15559	Bushing - 5/8 OD x .385 ID	4
11	N21728	Hex Slotted Nut - 1 1/2 - 12 UNF	3
12	N34423	U-Bolt - 3/8 x 2 x 7	4
13	N37049	Round Grip	4
14	N37162	Klik Pin - 5/16 x 2 11/32 Lg	1
15	N44710	Saftey Chain - 80,000 Lb	1
16	N49640	Pin - 1 1/2 Dia x 6 1/2 UL	1
	N59075	Pin - 2 Dia x 7 1/2 UL	
17	N49643	Hex Bolt - 1 x 9 Lg	1
18	N51920	Steering Link	1
19	N51945	Hitch	1
20	N53105	King Pin - 2 Dia x 14 UL	1
21	N53108	King Pin Bushing - 2 ID x 2 1/4 OD x 2 1/2 Lg	8
22	N53110	Steering Link Pin - 2 Dia x 9 1/16 Lg	1
23	N53115	Hitch Clevis - 1 1/2 Pin	1
23A	N65745	Hitch Clevis - 2 Pin (used on QUANTUM)	
24	N53120	Distribution Stand	1
25	N53273	Hitch Jack Bracket	1
26	N58091	Side Wind Jack - 5000 Lbs.x 15 Lift	1
27	N53276	Hose Holder Bracket	1
28	N53770	Bracket - Hose Holder	1
29	N53820	Drop Pin - 1 1/2 Dia x 8 13/16 Lg	1
30	N69690	Tie Rod - (47-9/32 center to center)	2
31	P106023	Spiral Pin - 3/8 Dia x 2 Lg	2
32	P1318510	Hairpin - #19	1
	C13447	Quick Pin - 5/16 Dia - 2 Pin (used on QUANTUM)	1
33	N51933	Bushing - 1 1/32 ID x 1 1/4 OD x 1 15/16 Lg	2
34	S27987	Flange Lock Nut - 3/8 W/Center Lock	15
35	N53149	Bushing - 1.02 ID x 1 1/2 OD x 6 Lg	1
36	S39569	Bushing - 1.25 ID x 1.6305 OD x 1.75 Lg	4
37	S40579	Washer - 2 1/32 ID x 3 1/2 OD x 1/4 Thick	1
38	S53814	Safety Chain Spacer Plate	1
39	S53816	Safety Chain Plate	1
40	W-498	Hex Bolt - 5/8 x 1-3/4 Lg	1
41	W-516	Hex Nut - 1/2	8
42	W-517	Hex Nut - 5/8	1
43	W-525	Lockwasher - 1/2	8
44	W-526	Lockwasher - 5/8	1
45	W-538	Washer - 7/16 ID x 1 OD x 14 Ga	4
46	W-1854	Hex Bolt - 3/8 x 3 Lg	3
47	W-3687	Hex Bolt - 1/2 x 8 Lg	4
48	AFW-85	Washer - 1 17/32 ID x 2 3/4 OD x 3/8 Thick	1
49	N55610	Thrust Washer - 2 1/32 ID x 4 3/4 OD x 1/4 Thick	1

Quad Steer Axle
9445, 9550 and 9650 - 2015 to Present

Note: Do not use grease on any components.

Apply a thin layer of oil onto seal lips of Dust Seal item #11 to ease in the installation of pivot pin.

Torque King Pin item #19 to 150 ft lbs.

Torque Rod item #34 to 50 ft lbs.

Coat spindle with an anti-seize compound.

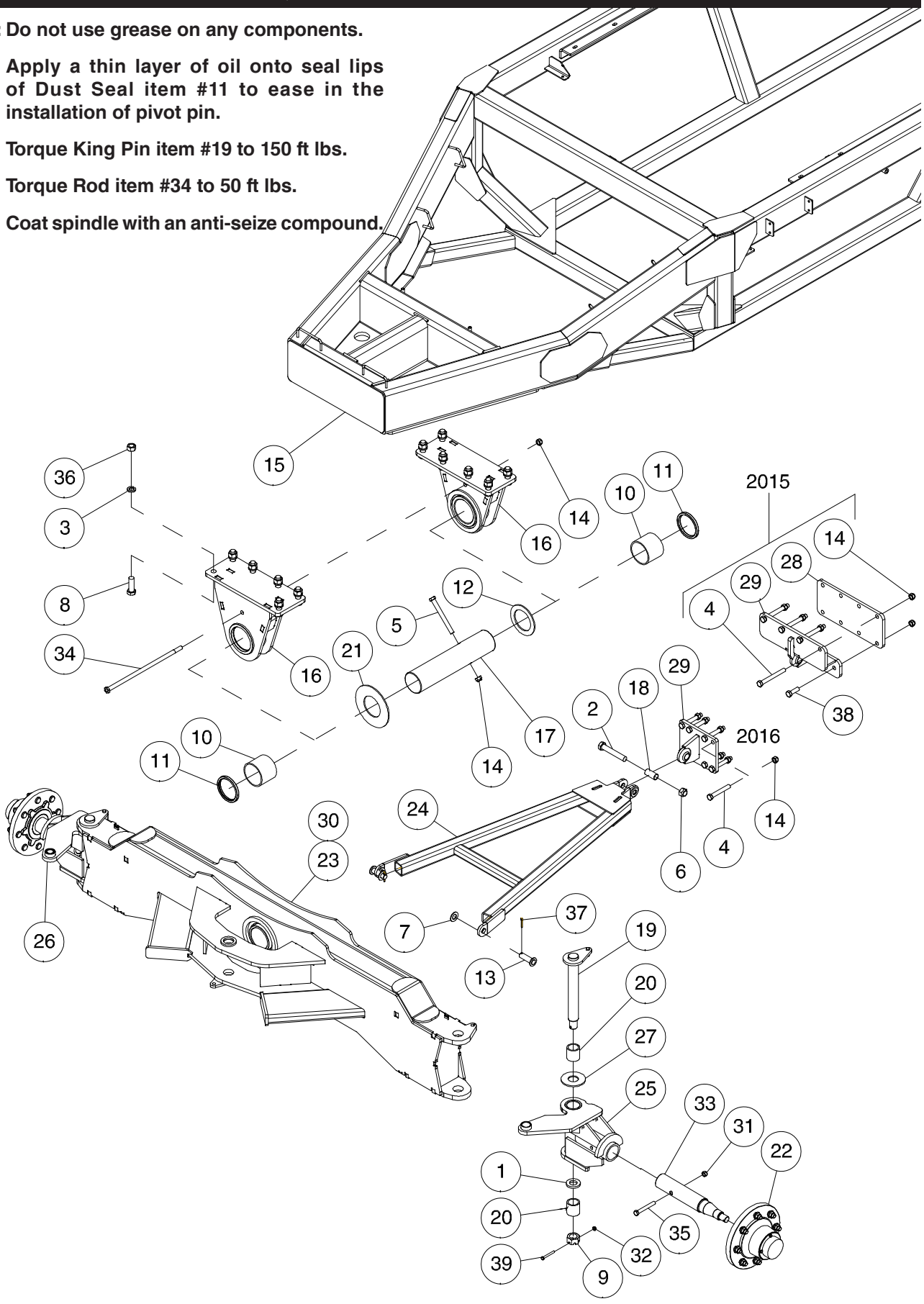

Quad Steer Axle - 9445, 9550 and 9650 - 2015 to Present

Item	Part No.	Description	Qty
1	AFW-85	Washer - 1 17/32 ID x 2 3/4 OD x 3/8	2
2	C-699	Hex Bolt - 1 x 6 Lg	1
3	C-705	Lockwasher - 1	12
4	C-3525	Hex Bolt - 3/4 x 6 1/2 Lg - 2015	8
	S-1191	**Hex Bolt - 3/4 x 5 Lg - 2016 to Present**	**8**
5	C-4709	Hex Head Bolt - 3/4 x 7 1/2 Lg	1
6	D-5274	Locknut - 1 Unitorque	1
7	D-5498	Washer - 1-1/16 ID x 2 OD x 11 Ga	2
8	K-5478	Hex Bolt - 1 x 3 1/2 Lg	12
9	N21728	Hex Slotted Nut - 1 1/2 - 12 UNF	2
10	N36225	Bushing - 4.510 ID x 5.094 OD x 4 Lg	2
11	N36228	Dust Seal	2
12	N44584	Thrust Washer - 4 17/32 ID x 6 1/2 OD x 1/4 Thick	1
13	N47700	Pin - 1 Dia x 2 7/8 UL	2
14	D-5273	Locknut - 3/4 Unitorque	10
15	N50610	Main Frame - Tow Behind - Prior to 2016	
	N55100	**Main Frame - Prodution run 2016 to present (See page 4-10)**	
16	N51910	Bearing Housing	2
17	N53100	Main Pivot Shaft	1
18	N53101	Spacer Bushing - 1 1/32 ID x 1 1/4 OD x 2 1/2 Lg	1
19	N53105	King Pin - 2 Dia x 14 UL	2
20	N53108	Kingpin Bushing - 2 ID x 2 1/4 OD x 2-1/2 Lg	4
21	N53132	Thrust Washer - 4 17/32 ID x 9 OD x 1/4 Thick	1
22	N53878	Hub Assembly - 12,000 Lb (Includes Item 33)	2
22A	N53879	Hub Assembly - DIGI-STAR - (Includes Item 33A)	
23	N55125	Front Axle - Standard Width	1
	N60770	Front Axle - Narrow Transport	1
24	N55140	Hitch Draft Link - 54.073 holes centers - 2015	1
	N58975	**Hitch Draft Link - 54.948 hole centers - 2016 to Present**	**1**
25	N70815	Spindle Trunion - 12,000 Lb - Left	1
26	N55155	Spindle Trunion - 12,000 Lb - Right	1
27	N55610	Wear Washer - 2 1/32 ID x 4 3/4 OD x 1/4 Thick	2
28	N56487	Mount Plate - 2015	1
29	N56490	Frame Draft Link - 2015	1
	N51940	**Frame Draft Link - 2016 to Present**	**1**
30	N54749	9650 Quad Steer Axle - Assembly - Standard Width	1
	N57581	9650 Quad Steer Axle - Assembly - Narrow Transport	
31	S-1197	Locknut - 5/8 Unitorque	2
32	S27987	Flange Lock Nut - 3/8 W/Center Lock	2
33	N55134	Spindle - 3 Dia - 12,000 Lb Hub	2
33A	N55145	Spindle - DIGI-STAR	
34	S44449	Threaded Rod - 3/4 x 20 1/4 Lg	1
35	W-505	Hex Bolt - 5/8 x 4 3/4 Lg	2
36	W-520	Hex Nut - 1	12
37	W-535	Cotter Pin - 1/4 x 1 1/2 Lg	2
38	W-1553	Hex Head Bolt - 3/4 x 2 1/4 Lg	4
39	W-1854	Hex Bolt - 3/8 x 3	2

Serial number break:
9445 Serial # 9445155811 and newer.
9550 Serial # 9550154821 and newer.
9650 Serial # 9650152842 and newer.

Quad Steer Axle
9445, 9550 and 9650 - 2015 to Present

Note: Do not use grease on any components.

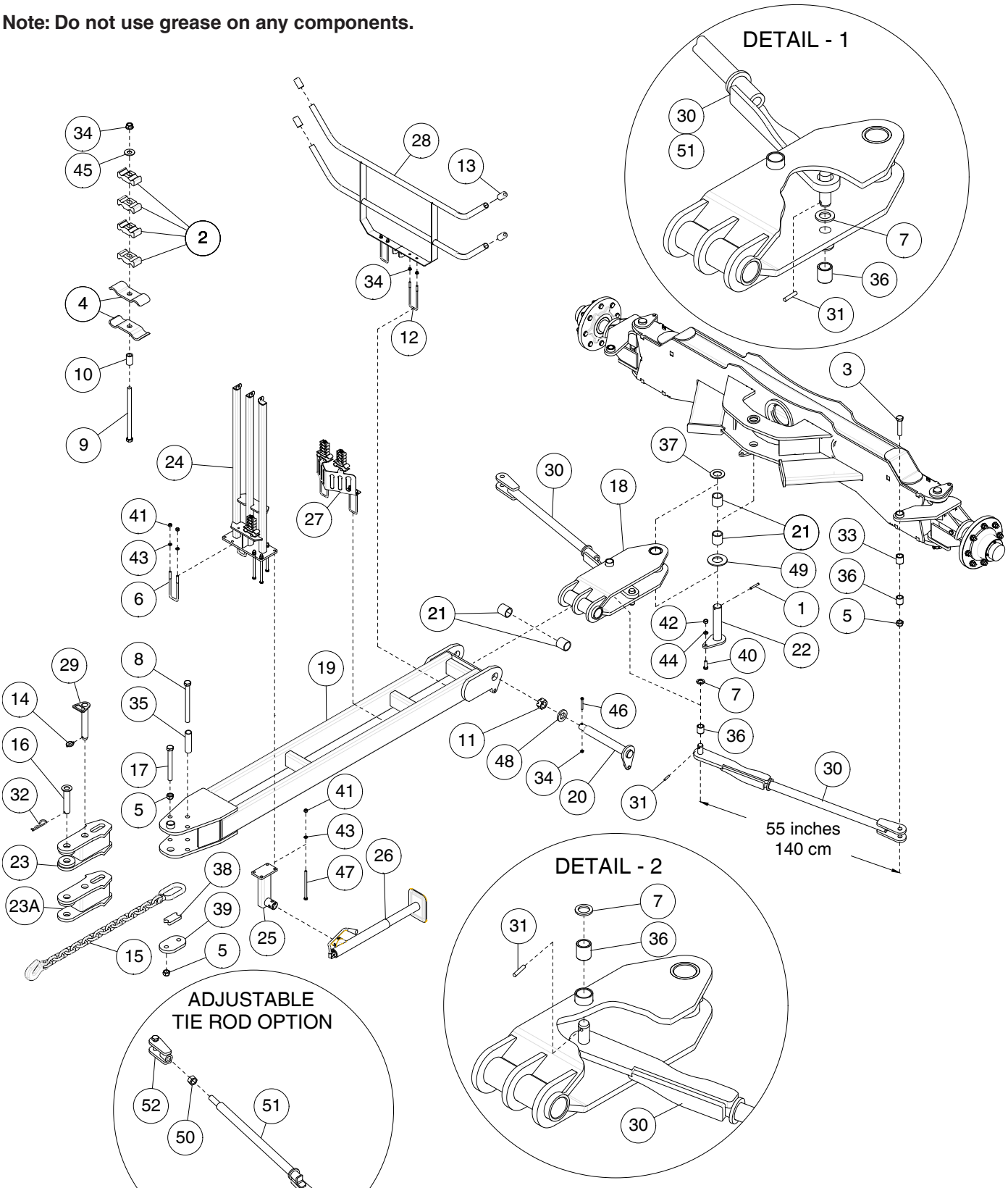

Serial number break:
9445 Serial # 9445155811 and newer.
9550 Serial # 9550154821 and newer.
9650 Serial # 9650152842 and newer.

Quad Steer Hitch - 9445, 9550 and 9650 - 2015 to Present

Item	Part No.	Description	Qty
1	C-728	Spiral Pin - 3/8 Dia x 2 3/4 Lg	1
2	C-4698	Oil Line Clamp Bracket	16
3	C12609	Hex Bolt - 1 x 4 1/2 Lg	2
4	D-4808	Hose Support Clamp	8
5	D-5274	Locknut - 1” Unitorque	5
6	H-4321	U-Bolt - 1/2 x 2 1/16 x 7 1/4	2
7	H-4693	Washer - 1 15/16 OD x 1 9/32 ID x 3/16	2
8	K53438	Hex Bolt - 1 x 11 Lg GR.8	2
9	N11461	Hex Bolt - 3/8 x 6 Lg	4
10	N15559	Bushing - 5/8 OD x .385 ID	4
11	N21728	Hex Slotted Nut - 1 1/2 - 12 UNF	3
12	N34423	U-Bolt - 3/8 x 2 x 7	4
13	N37049	Round Grip	4
14	N37162	Klik Pin - 5/16 x 2 11/32 Lg	1
15	N44710	Saftey Chain - 80,000 Lb	1
16	N49640	Pin - 1 1/2 Dia x 6 1/2 UL	1
	N59075	Pin - 2 Dia x 7 1/2 UL	
17	N49643	Hex Bolt - 1 x 9 Lg	1
18	N51920	Steering Link	1
19	N51945	Hitch	1
20	N53105	King Pin - 2 Dia x 14 UL	1
21	N53108	King Pin Bushing - 2 ID x 2 1/4 OD x 2 1/2 Lg	8
22	N53110	Steering Link Pin - 2 Dia x 9 1/16 Lg	1
23	N53115	Hitch Clevis - 1 1/2 Pin	1
23A	N65745	Hitch Clevis - 2 Pin (used on QUANTUM)	
24	N53120	Distribution Stand	1
25	N53273	Hitch Jack Bracket	1
26	N58091	Side Wind Jack - 5000 Lbs.x 15 Lift	1
27	N53276	Hose Holder Bracket	1
28	N53770	Bracket - Hose Holder	1
29	N53820	Drop Pin - 1 1/2 Dia x 8 13/16 Lg	1
30	N69685	Tie Rod - 9445, 9550, 9650 - Standard (55 center to center)	2
	N69690	Tie Rod - 9445, 9550, 9650 - Narrow Transport (47-9/32 center to center)	2
31	P106023	Spiral Pin - 3/8 Dia x 2 Lg	2
32	P1318510	Hairpin - #19	1
	C13447	Quick Pin - 5/16 Dia - 2 Pin (used on QUANTUM)	1
33	N51933	Bushing - 1 1/32 ID x 1 1/4 OD x 1 15/16 Lg	2
34	S27987	Flange Lock Nut - 3/8 W/Center Lock	15
35	N53149	Bushing - 1.02 ID x 1 1/2 OD x 6 Lg	1
36	S39569	Bushing - 1.25 ID x 1.6305 OD x 1.75 Lg	4
37	S40579	Washer - 2 1/32 ID x 3 1/2 OD x 1/4 Thick	1
38	S53814	Safety Chain Spacer Plate	1
39	S53816	Safety Chain Plate	1
40	W-498	Hex Bolt - 5/8 x 1-3/4 Lg	1
41	W-516	Hex Nut - 1/2	8
42	W-517	Hex Nut - 5/8	1
43	W-525	Lockwasher - 1/2	8
44	W-526	Lockwasher - 5/8	1
45	W-538	Washer - 7/16 ID x 1 OD x 14 Ga	4
46	W-1854	Hex Bolt - 3/8 x 3 Lg	3
47	W-3687	Hex Bolt - 1/2 x 8 Lg	4
48	AFW-85	Washer - 1 17/32 ID x 2 3/4 OD x 3/8 Thick	1
49	N55610	Thrust Washer - 2 1/32 ID x 4 3/4 OD x 1/4 Thick	1
50	P61D20	Hex Nut - 1 1/4 (Prior to 2017)	2
51	N55130	Threaded Tie Rod - Standard - (55 center to center) (Prior to 2017)	2
	N60769	Threaded Tie Rod - Narrow Transport - (47-17/32 center to center) (Prior to 2017)	2
52	N53274	Steering Link Clevis (Prior to 2017) - Adjustable Tie-Rod	2

Note: Do not use grease on any components.

Apply a thin layer of oil onto seal lips of Dust Seal item #12 to ease in the installation of pivot pin.

Torque King Pin item #25 to 150 ft lbs.

Torque Rod item #33 to 50 ft lbs.

Coat spindle with an anti-seize compound.

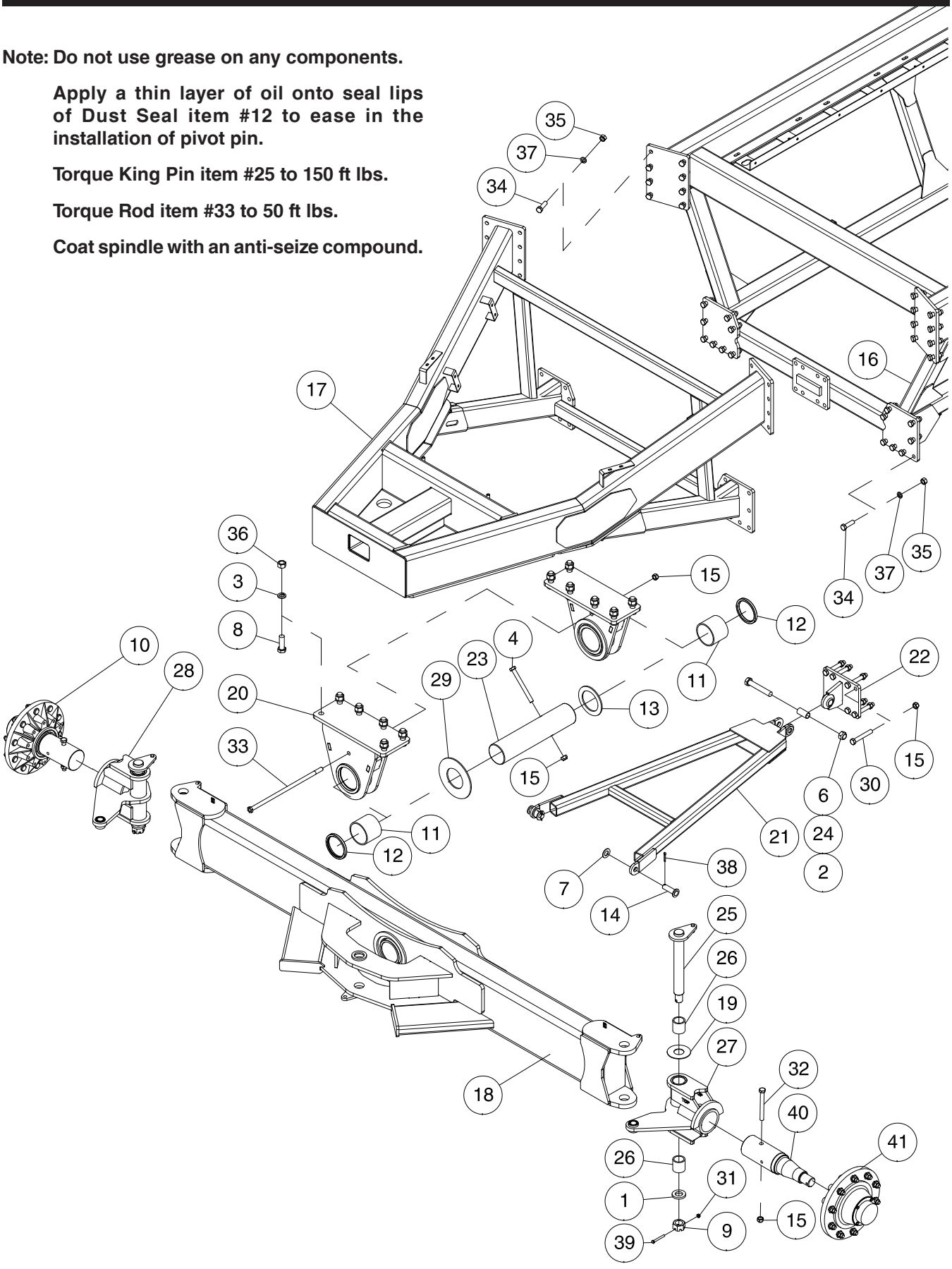

Quad Steer Axle - 9800 and 91000

Item	Part No.	Description	Qty
1	AFW-85	Washer - 1 17/32 ID x 2 3/4 OD x 3/8 Thick	2
2	C-699	Hex Bolt - 1 x 6 Lg	1
3	C-705	Lockwasher - 1	12
4	C-4709	Hex Head Bolt - 3/4 x 7 1/2 Lg	1
5	* * * * *		
6	D-5274	Unitorque Locknut - 1	1
7	D-5498	Washer - 1-1/16 ID x 2 OD x 11 Ga	2
8	K-5478	Hex Bolt - 1 x 3 1/2 Lg	12
9	N21728	Hex Slotted Nut - 1-1/2 - 12 UNF	2
10	**N36138**	**Hub and Spindle Assembly - 10 Blot - 20000 Hub - Contains Items 40 & 41**	**2**
	N55234	DIGI-STAR Hub & Spindle Assembly	
11	N36225	Bushing - 4.510 ID x 5.094 OD x 4 Lg	2
12	N36228	Dust Seal	2
13	N44584	Thrust Washer - 4 17/32 ID x 6 1/2 OD x 1/4 Thick	1
14	N47700	Cylinder Pin - 1 Dia x 2 7/8 UL	2
15	D-5273	Hex Locknut - 3/4 Unitorque	11
16	N51610	Main Frame - 9800	1
17	N51615	Front Frame - Main Frame	1
18	N51905	Quad Steer Front Axle	1
19	N55610	Thrust Washer - 2 1/32 ID x 4 3/4 OD x 1/4 thick	2
20	N51910	Bearing Housing - Contains Items 11 & 12	2
21	N51935	Hitch Draft Link - 56 5/8 holes centers	1
22	N51940	Frame Draft Link	1
23	N53100	Main Pivot Shaft	1
24	N53101	Spacer Bushing - 1 1/32 ID x 1 1/4 OD x 2 1/2 Lg	1
25	N53105	King Pin - 2 Dia x 14 UL	2
26	N53108	Kingpin Bushing - 2 ID x 2 1/4 OD x 2 1/2 Lg	4
27	N53125	Spindle Trunion - Left - 20,000Lbs - Contains Item 26	1
28	N53130	Spindle Trunion - Right - 20,000Lbs - Contains Item 26	1
29	N53132	Thrust Washer - 4 17/32 ID x 9 OD x 1/4 thick	1
30	S-1191	Hex Bolt - 3/4 x 5 Lg	8
31	S27987	Lock Nut - Flange 3/8 W/Center Lock	2
32	S32590	Hex Bolt - 3/4 x 7 GR-8	2
33	S44449	Welded Threaded Rod - 3/4 Dia x 20 1/4 Lg	1
34	W-509	Hex Bolt - 3/4 x 2 1/2 Lg	32
35	W-518	Hex Nut - 3/4	33
36	W-520	Hex Nut - 1	12
37	W-527	Lockwasher - 3/4	33
38	W-535	Cotter Pin - 1/4 x 1 1/2 Lg	2
39	W-1854	Hex Bolt - 3/8 x 3	2
40	N32871	Spindle - 4 1/2 Diameter	2
	N53363	Spindle - DIGI-STAR	
41	N36137	Hub Assembly - 20,000 Lbs.	2

Quad Steer Axle
9800 and 91000

Note: Do not use grease on any components.

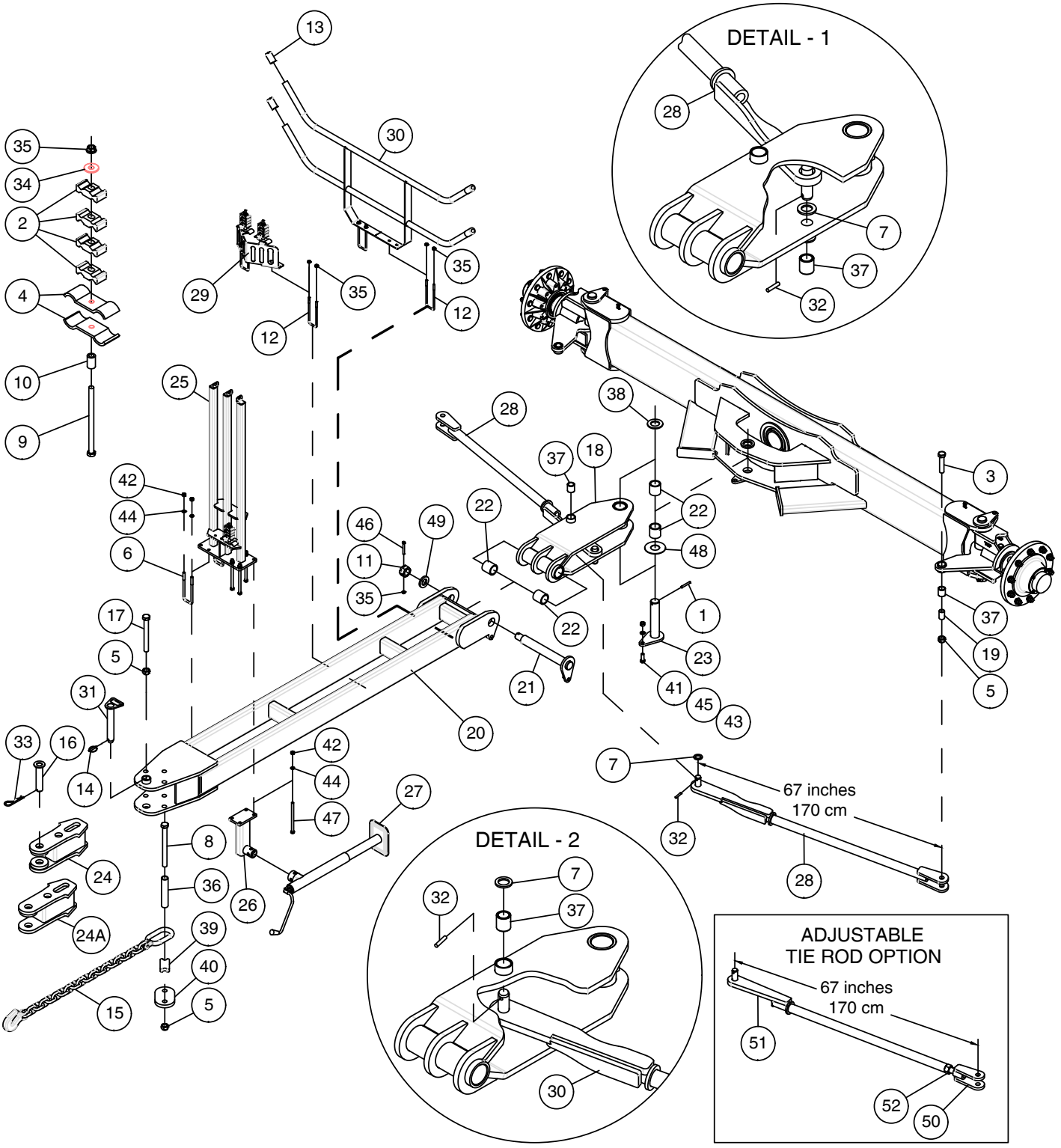

Quad Steer Hitch - 9800 and 91000			
Item	**Part No.**	**Description**	**Qty**
1	C-728	Spiral Pin - 3/8 Dia x 2 3/4 Lg	1
2	C-4698	Oil Line Clamp Bracket	16
3	C12609	Hex Bolt - 1 x 4 1/2 Lg	2
4	D-4808	Hose Support Clamp	8
5	D-5274	Unitorque Locknut - 1	5
6	H-4321	U-Bolt - 1/2 x 2 1/16 x 7 1/4	2
7	H-4693	Washer - 1 15/16 OD x 1 9/32 ID x 3/16 Thick	2
8	K53438	Hex Bolt - 1 x 11 Lg GR.8	2
9	N11461	Hex Bolt - 3/8 x 6 Lg	4
10	N15559	Bushing - 5/8 OD x .385 ID x 1 Lg	4
11	N21728	Hex Slotted Nut - 1-1/2 - 12 UNF	3
12	N34423	U-Bolt - 3/8 x 2 x 7	4
13	N37049	Rubber Grip	4
14	N37162	Klik Pin - 5/16 x 2 11/32 Lg	1
15	N44710	Safety Chain - 80,000 Lbs.	1
16	N49640	Pin - 1 1/2 Dia x 6 1/2 UL	1
	N59075	Pin - 2 Dia x 7 1/2 UL - (used on QUANTUM)	
17	N49643	Hex Bolt - 1 x 9 Lg	1
18	N51920	Steering Link	1
19	N51933	Spacer Bushing - 1 1/32 ID x 1 1/4 OD x 1 15/16 Lg	2
20	N51945	Hitch	1
21	N53105	King Pin - 2 Dia x 14 UL	1
22	N53108	King Pin Bushing - 2 ID x 2 1/4 OD x 2 1/2 Lg	8
23	N53110	Steering Link Pin - 2 Dia x 9 1/16 Lg	1
24	N53115	Hitch Clevis - 1 1/2 Pin	1
24A	N65745	Hitch Clevis - 2 Pin (used on QUANTUM)	
25	N53120	Distribution Stand	1
26	N53273	Hitch Jack Bracket	1
27	N58091	Side Wind Jack - 5000 Lbs.x 15 Lift	1
28	N69704	Tie Rod - 9800, 91000 - Standard (67 1/16 center to center)	2
29	N53276	Hose Holder Bracket	1
30	N53770	Bracket - Hose Holder	1
31	N53820	Drop Pin - 1 1/2 Dia x 8 13/16 Lg	1
32	P106023	Spiral Pin - 3/8 Dia x 2 Lg	2
33	P1318510	Hairpin - #19	1
	C13447	Quick Pin - 5/16 Dia - 2 Pin (used on QUANTUM)	1
34	W-538	Flatwasher - 3/8	4
35	S27987	Lock Nut - 3/8 Flange W/Center Lock	15
36	N53149	Bushing - 1.02 ID x 1 1/2 OD x 6 Lg	1
37	S39569	Bushing - 1.25 ID x 1.6305 OD x 1.75 Lg	4
38	S40579	Washer - 2 1/32 ID x 3 1/2 OD x 1/4 Thick	1
39	S53814	Safety Chain Spacer Plate	1
40	S53816	Safety Chain Plate	1
41	W-498	Hex Bolt - 5/8 x 1 3/4 Lg	1
42	W-516	Hex Nut - 1/2	8
43	W-517	Hex Nut - 5/8	1
44	W-525	Lockwasher - 1/2	8
45	W-526	Lockwasher - 5/8	1
46	W-1854	Hex Bolt - 3/8 x 3 Lg	3
47	W-3687	Hex Bolt - 1/2 x 8 Lg	4
48	N55610	Thrust Washer - 2 1/32 ID x 4 3/4 OD x 1/4 Thick	1
49	AFW-85	Washer - 1 17/32 ID x 2 3/4 OD x 3/8 Thick	1
50	N53274	Steering Link Clevis - Adjustable - Prior to 2017	2
51	N53275	Steering Link - Adjustable - (67 center to center) - Prior to 2017	2
52	P61D20	Hex Nut - 1 1/4 - for Adjustable Steering Link - Prior to 2017	2

Hydraulic Hitch Jack - Tow Between
9445, 9550, 9650 and 9800 - Standard
9365, 9450 and 9535 - Optional

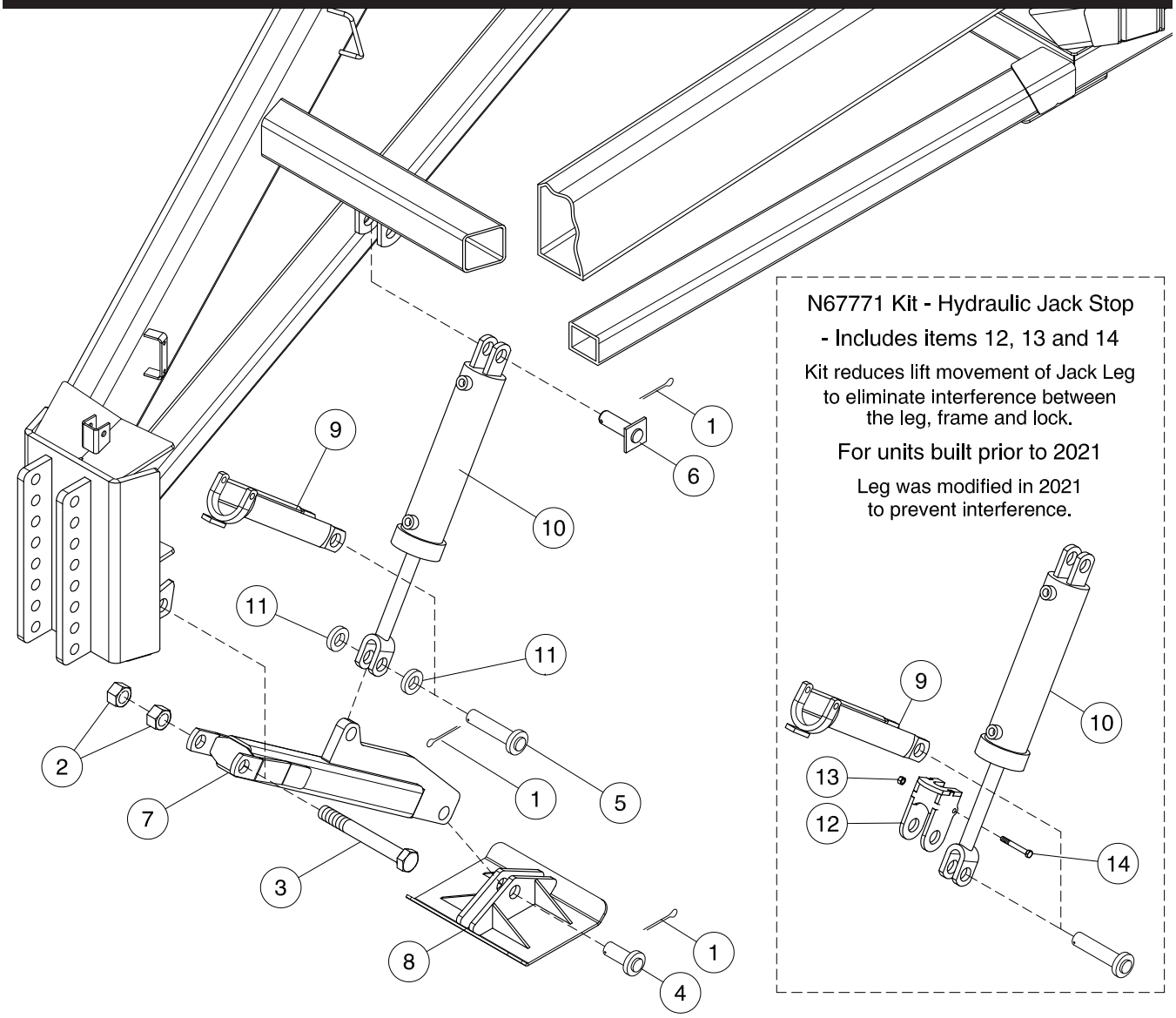

Item	Part No.	Description	Qty
1	D-5239	Cotter Pin - 1/4 x 2 1/4 Lg	3
2	C15768	Jam Nut - 1 1/4	2
3	C39424	Hex Bolt - 1 1/4 x 10 Lg	1
4	N28997	Pin - 1 1/4 x 2 1/4 UL	1
5	S39545	Pin - 1 1/4 x 4 5/16 UL	1
6	S42784	Pin - 1 1/4 x 3 5/16 UL	1
7	N47735	Leg	1
8	N47738	Foot	1
9	N49396	Lock Arm	1
10	C39175	Cylinder - 3 1/2 x 12	1
11	N56747	Washer - 1.281 ID x 2 1/4 OD x 1/2 Thick	2
12	N67775	Hydraulic Jack Stop	1
13	M-3388	Locknut - 3/8	1
14	W-481	Hex Bolt - 3/8 x 3 1/2 Lg	1
	N67771	**Kit - Hydraulic Jack Stop - Includes items 12, 13 and 14**	

Hitch Jack Hydraulics - Tow Between Hydraulics

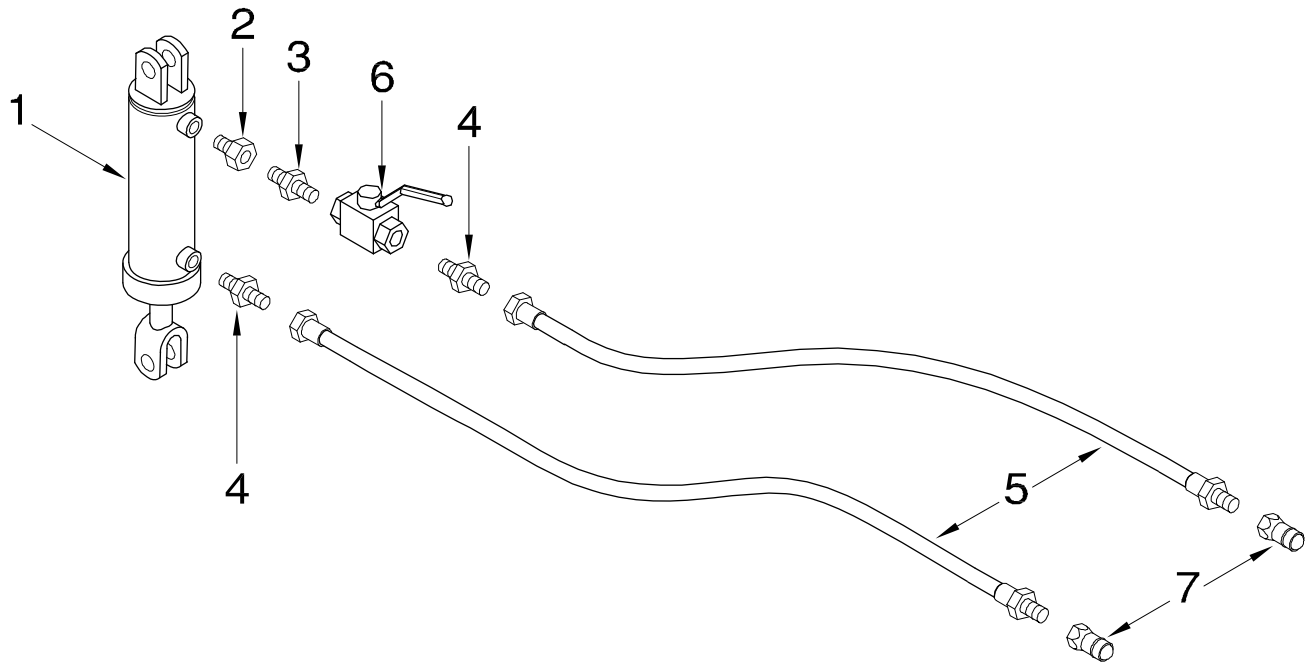

Item	Part No.	Description	Qty
1	C39175	Cylinder - 3 1/2 x 12	1
2	N34503	Connector - 3/4-16 FJIC x 3/4-16 MORB	1
3	C15330	Connector - 3/4-16 MJIC x 3/4-16 MORB	1
4	C15348	Connector - 9/16-18 MJIC x 3/4-16 MORB	2
5	N37404	Hyd Hose - 3/8 x 152 Lg w/ 9/16-18 FJIC x 7/8-14 MORB	2
6	N42880	Valve - 2 Way Ball	1
6A	N42881	Handle - Valve	1
7	N34498	Male Pioneer Tip - 7/8-14 FORB	2

Hydraulic Hose Holders - Tow Between Hitch

Note: On units equipped with Dual Fans the fan mount bracket is installed first.

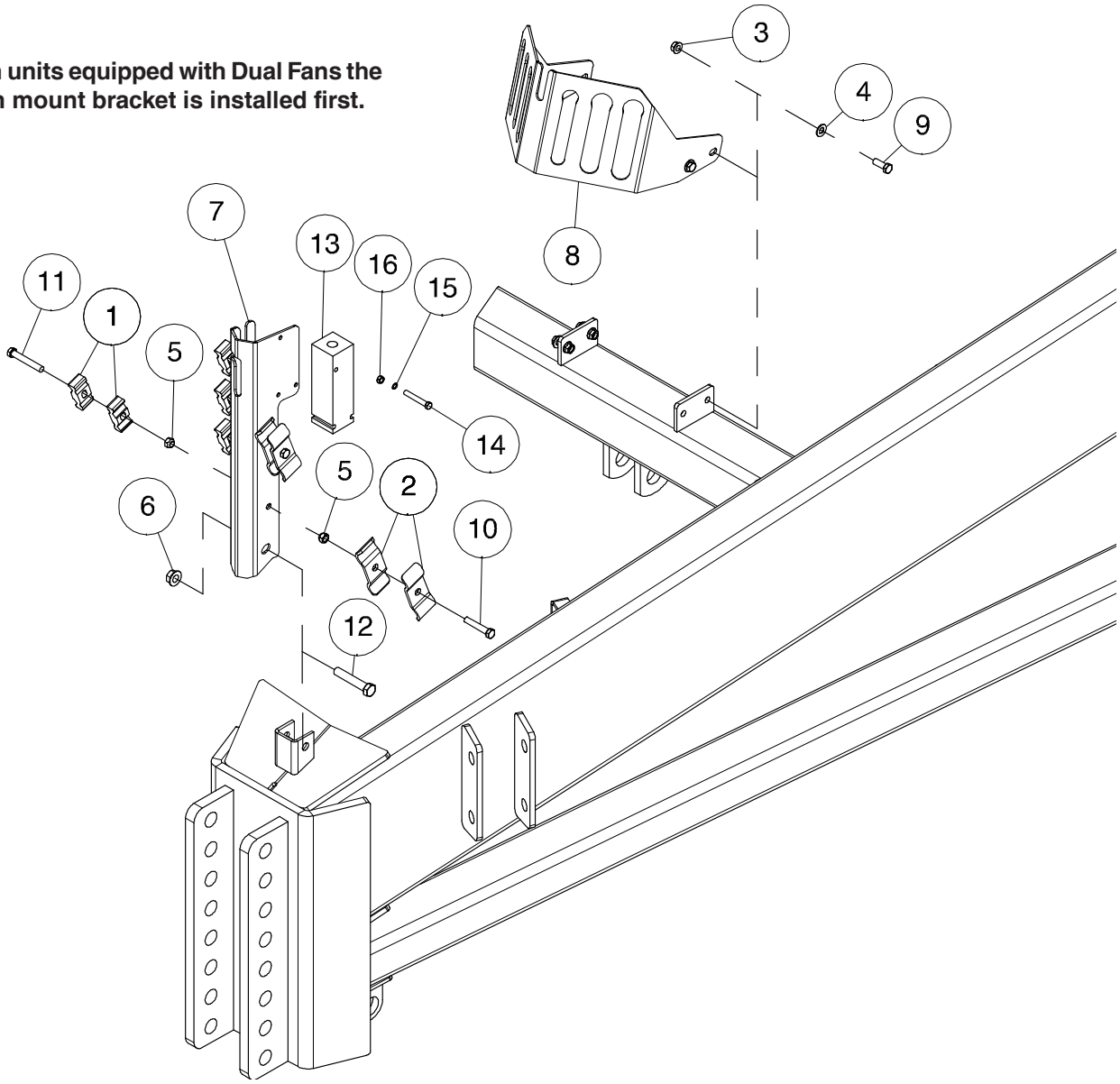

Item	Part No.	Description	Qty
1	C-4698	Nylon Clamp	12
2	D-4808	Hose Support Clamp	4
3	D-5279	Flange Lock Nut - 3/8 Serrated	4
4	D-5489	Washer - 13/32 ID x 13/16 OD x 16 Ga	4
5	M-3388	Locknut - 3/8 Unitorque	8
6	N37907	Flange Lock Nut - 1/2 W/Center Lock	1
7	N53165	Plate - Hose Holder	1
8	N53166	Plate - Hose Storage	1
9	W-475	Hex Bolt - 3/8 x 1 Lg	4
10	W-478	Hex Bolt - 3/8 x 2 Lg	2
11	W-480	Hex Bolt - 3/8 x 2 1/2 Lg	6
12	W-491	Hex Bolt - 1/2 x 2 3/4 Lg	1
13	**N58670**	**Case Drain Header**	**1**
14	**C15319**	**Hex Bolt - 1/4 x 2 1/2 Lg**	**3**
15	**W-521**	**Lockwasher - 1/4**	**3**
16	**W-512**	**Hex Nut - 1/4**	**3**

Section 5: Hitching

Section Contents

Tow Behind 9360 and 9450 - Except Quad Steer 5-2
Quad Steer Hitch - Maxim II.....5-4
Quad Steer Hitch - Maxim III.....5-5
Concept 2000 Tow Hitch.....5-6
Quad Steer Hitch - Contour Drill 5-7
Quad Steer Hitch - RAZR.....5-8
Rear Tow Hitch 5-9

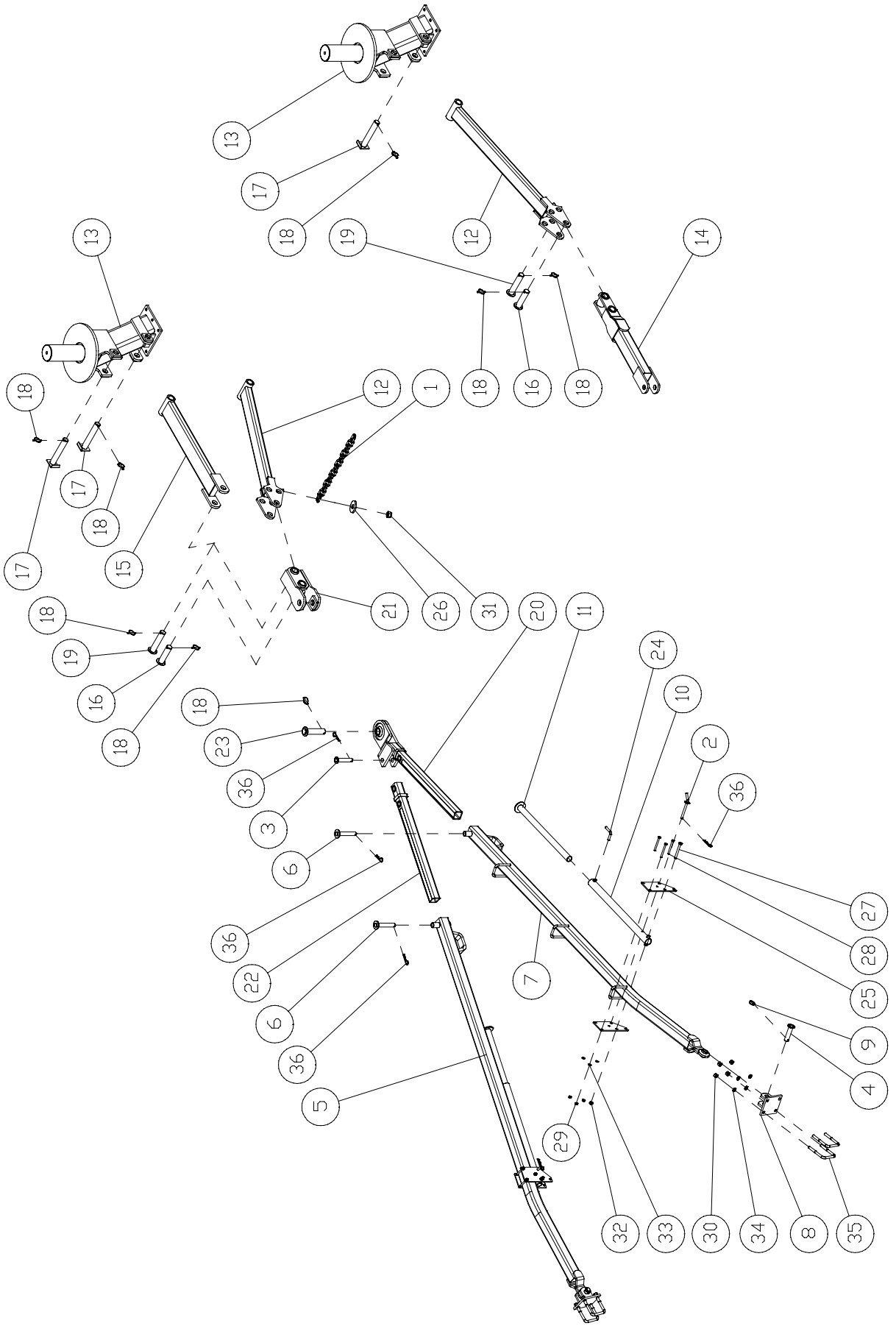
13
17
18
19
12
14
16
1
15
21
26
31
20
11
24
10
2
36
23
3
6
22
7
27
28
25
9
4
5
29
32
33
30
34
8
35

Hitching - Tow Behind - 9360 and 9450

Item	Part No.	Description	Qty
1	C18761	Chain - Safety - 40,000 lb	1
	N44710	Chain - Safety - 80,000 lb (Used on Seeding Unit)	1
2	D-5140	Pin - Cable Lock - 5/8 Dia	2
3	C-3717	Pin - 1 Dia x 4 1/8 UL	1
4	N16226	Pin - Hitch - 1 1/8 Dia x 3 11/16 UL	2
5	N19054	Hitch Tube - Outer Right (Straight)	1
6	N19055	Pin - 1 Dia x 5 13/32 UL	2
7	N19196	Hitch Tube - Outer Left (Straight)	1
8	N19203	Bracket Mounting Lugs	2
9	N19307	Klik Pin - 1/4 Dia x 1 3/4 Lg	2
10	N22793	Tube - Outer	2
11	N22794	Tube - Inner	2
12	N36162	Yard Hitch	1
13	N36178	Castor	1
14	N36240	Hitch Clevis	1
15	N36243	Hitch Tube	1
16	N37159	Pin - 1 1/2 Dia x 5 1/8 UL	1
17	N37160	Pin - 1 1/2 Dia x 8 3/8 UL	2
18	N37162	Klik Pin - 5/16 Dia x 2 11/32 Lg	5
19	N37176	Pin - 1 1/2 Dia x 6 7/16 UL	1
20	N37400	Hitch Tube - Inner Left	1
21	N37410	Clevis - 1 1/2 Dia	1
22	N19051	Hitch Tube - Inner Right	1
23	N37417	Pin - 1 1/2 Dia x 5 5/8 UL	1
24	D10553	Handle	2
25	N22797	Plate - Mount	4
26	N19065	Flatwasher - 1 1/6	1
27	S-951	Hex Bolt - 1/2 x 4 1/2 Lg	2
28	C-1550	Hex Bolt - 3/8 x 4 Lg	6
29	W-514	Hex Nut - 3/8	6
30	W-517	Hex Nut - 5/8	8
31	D-5274	Locknut - 1 Unitorque	1
32	F-3405	Locknut - 1/2 Unitorque	2
33	W-523	Lockwasher - 3/8	6
34	W-526	Lockwasher - 5/8	8
35	C-219	U-Bolt - 5/8 x 4 x 5 9/16	4
36	BW-11	Hairpin - #8 - 3/16 x 3 3/4 Lg	5
	N22800	Hitch Stand Kit (order Through Wholegoods) (Includes Items #12, 13, 14, 22, 24, 25, 26, 28, 29, 31 & 36)	

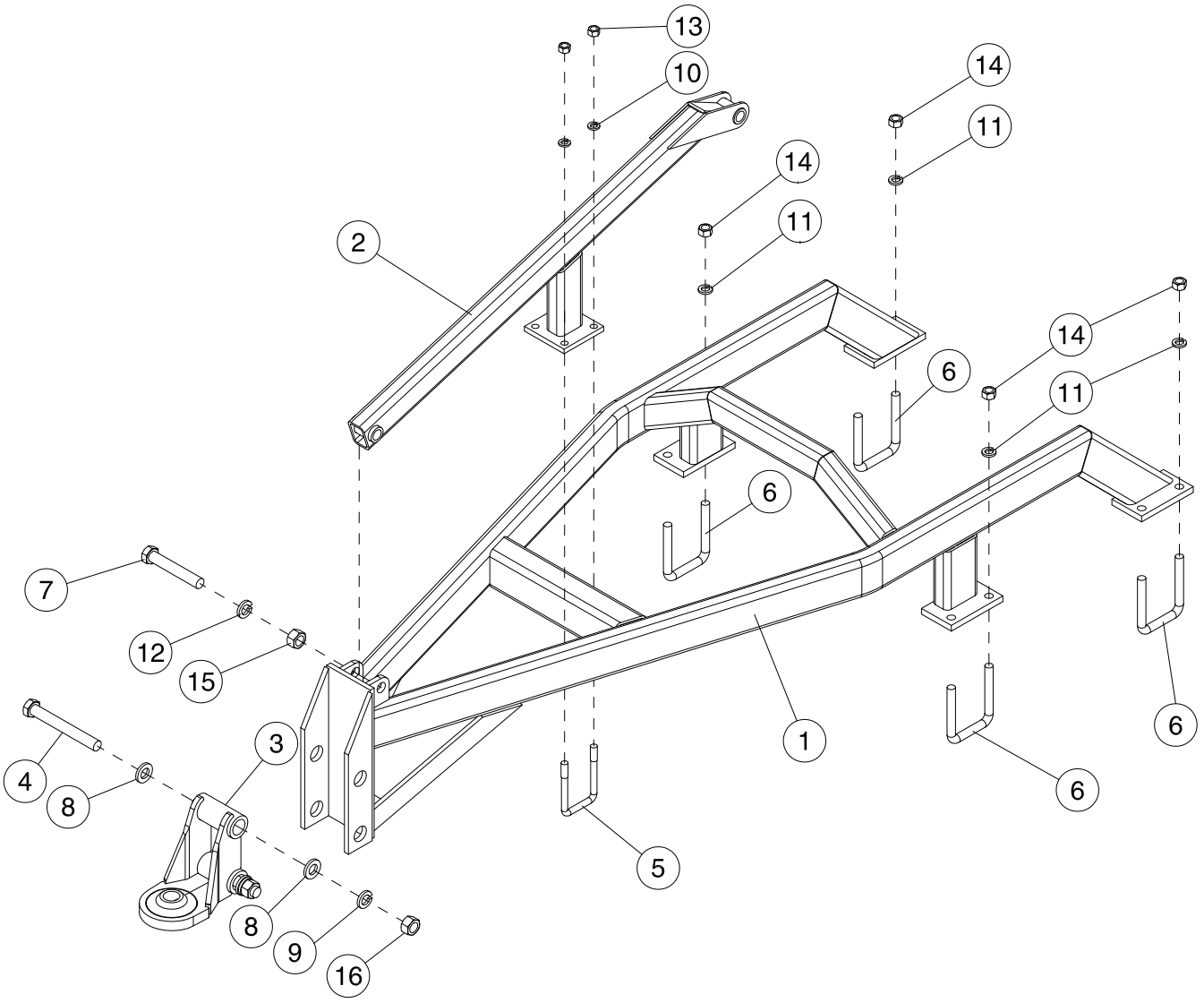

Item	Part No.	Description	Qty
1	S44791	Hitch - Quad Steer	1
2	S44789	Rib - Quad Steer Hitch	1
3	S56135	Hitch Clevis - Rear	1
4	C18597	Hex Bolt - 1 x 8 Lg.	2
5	F-4543	U-Bolt - 5/8 x 3 1/16 x 5 3/8 UL	2
6	C-5561	U-Bolt - 3/4 x 4 x 5 9/16 UL	4
7	C-699	Hex Head Bolt - 1 x 6 Lg	1
8	F-4490	Washer - 1 1/32 ID x 1 7/8 OD x 1/4 Thick	4
9	C-705	Lockwasher - 1	2
10	W-526	Lockwasher - 5/8	4
11	W-527	Lockwasher - 3/4	8
12	C-705	Lockwasher - 1	1
13	W-517	Hex Nut - 5/8	4
14	W-518	Hex Nut - 3/4	8
15	W-520	Hex Nut - 1	1
16	W-520	Hex Nut - 1	2

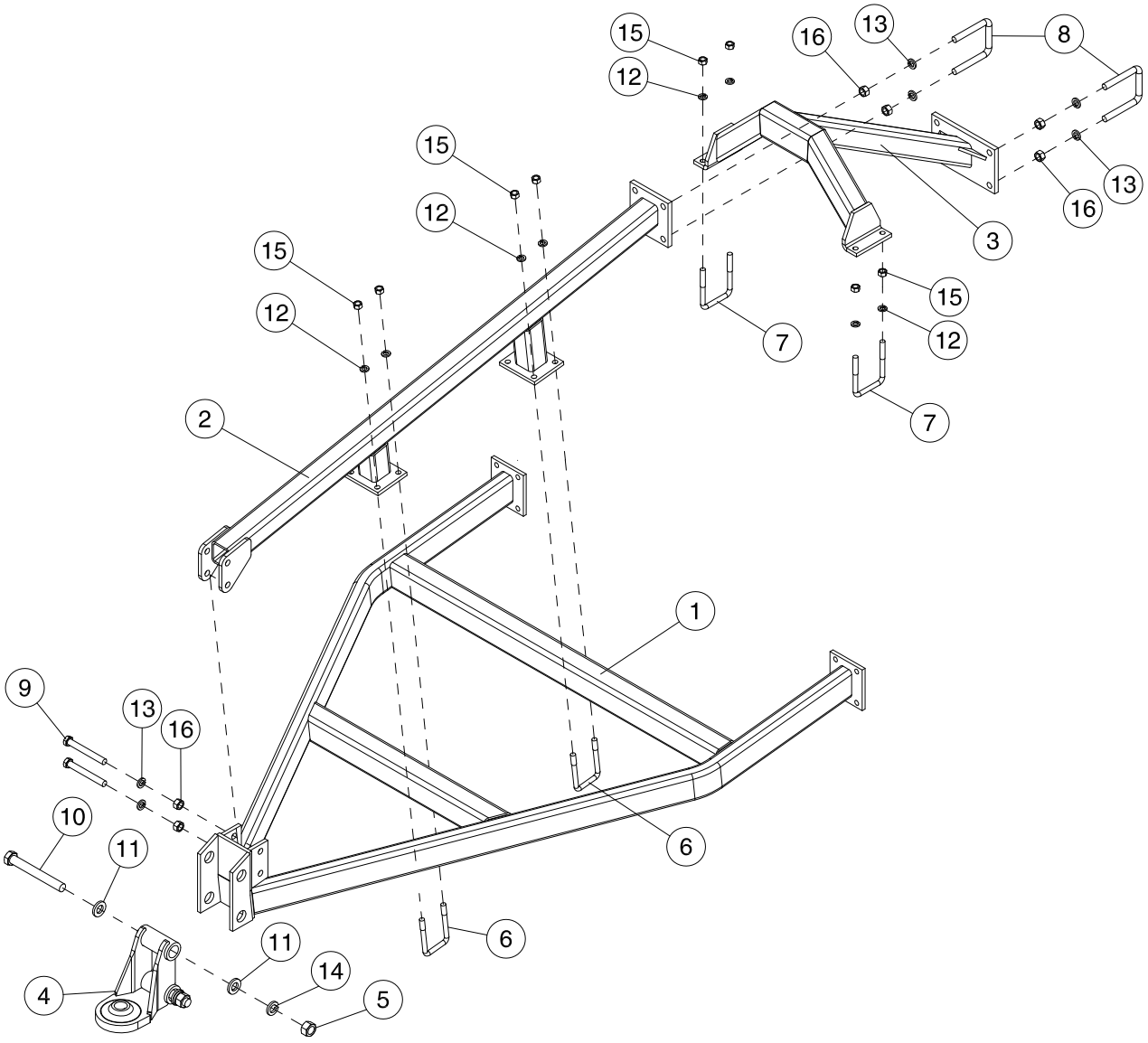

Item	Part No.	Description	Qty
1	S44750	Hitch - Quad Steer	1
2	S44755	Rib - Quad Steer Hitch	1
3	S44760	Support - Hitch Rib	1
4	S56135	Hitch Clevis - Rear	1
5	W-520	Hex Nut - 1	2
6	F-4543	U-Bolt - 5/8 x 3 1/16 x 5 3/8 UL	4
7	C-219	U-Bolt - 5/8 x 4 x 5 9/16 UL	2
8	C-5561	U-Bolt - 3/4 x 4 x 5 9/16 UL	4
9	D-5558	Hex Head Bolt - 3/4 x 6 Lg	2
10	C18597	Hex Bolt - 1 x 8 Lg	2
11	F-4490	Washer - 1 1/32 ID x 1 7/8 OD x 1/4 Thick	4
12	W-526	Lockwasher - 5/8	12
13	W-527	Lockwasher - 3/4	10
14	C-705	Lockwasher - 1	2
15	W-517	Hex Nut - 5/8	12
16	W-518	Hex Nut - 3/4	10

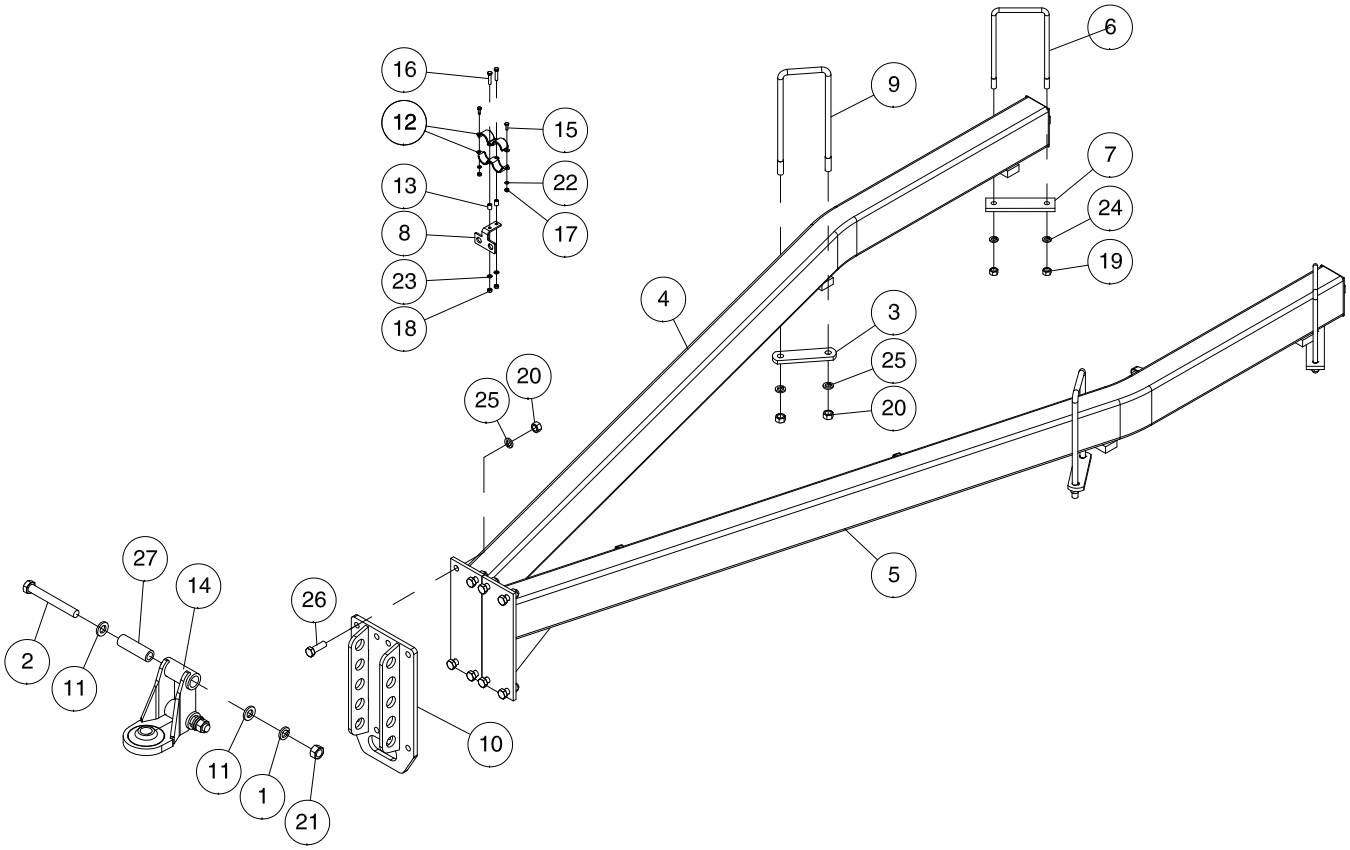

Item	Part No.	Description	Qty
1	C-705	Lockwasher - 1	2
2	C18597	Hex Bolt - 1 x 8 Lg	2
3	C31353	Clamp Strap - 5 Frame	2
	C34839	Plate - 3 Frame	2
4	C34801	Left Arm	1
5	C34802	Right Arm	1
6	C34837	U-Bolt - 5/8 x 6 x 11-1/2	2
7	C34839	Plate	2
8	C34843	Bracket	1
9	C51984	U-Bolt - 3/4 x 5-1/4 x 15 - 5 Frame	2
	C34837	U-Bolt - 5/8 x 6 x 11-1/2 - 3 Frame	2
10	C51986	Hitch Clevis Bracket	1
11	F-4490	Washer - 1 1/32 ID x 1 7/8 OD x 1/4 Thick	4
12	N16608	End Clamp	2
13	N19366	Bushing - 1/2 OD x .334 ID	2
14	S56135	Hitch Clevis - Rear	1
15	W-469	Hex Head - 1/4 x 3/4 Lg	2
16	W-473	Hex Bolt - 5/16 x 1-1/2 Lg	2
17	W-512	Hex Nut - 1/4	2
18	W-513	Hex Nut - 5/16	2
19	W-517	Hex Nut - 5/8	4
20	W-518	Hex Nut - 3/4 - 5 Frame	12
	W-517	Hex Nut - 5/8 - 3 Frame	4
21	W-520	Hex Nut - 1	2
22	W-521	Lockwasher - 1/4	2
23	W-522	Lockwasher - 5/16	2
24	W-526	Lockwasher - 5/8	4
25	W-527	Lockwasher - 3/4 - 5 Frame	12
	W-526	Lockwasher - 5/8 - 3 Frame	4
26	W-1553	Hex Head Bolt - 3/4 x 2 1/4 Lg	8
27	S44370	Bushing - 1 ID x 1 1/2 OD x 5 31/32 Lg	2

Hitching
Quad Steer Hitch - Contour Drill

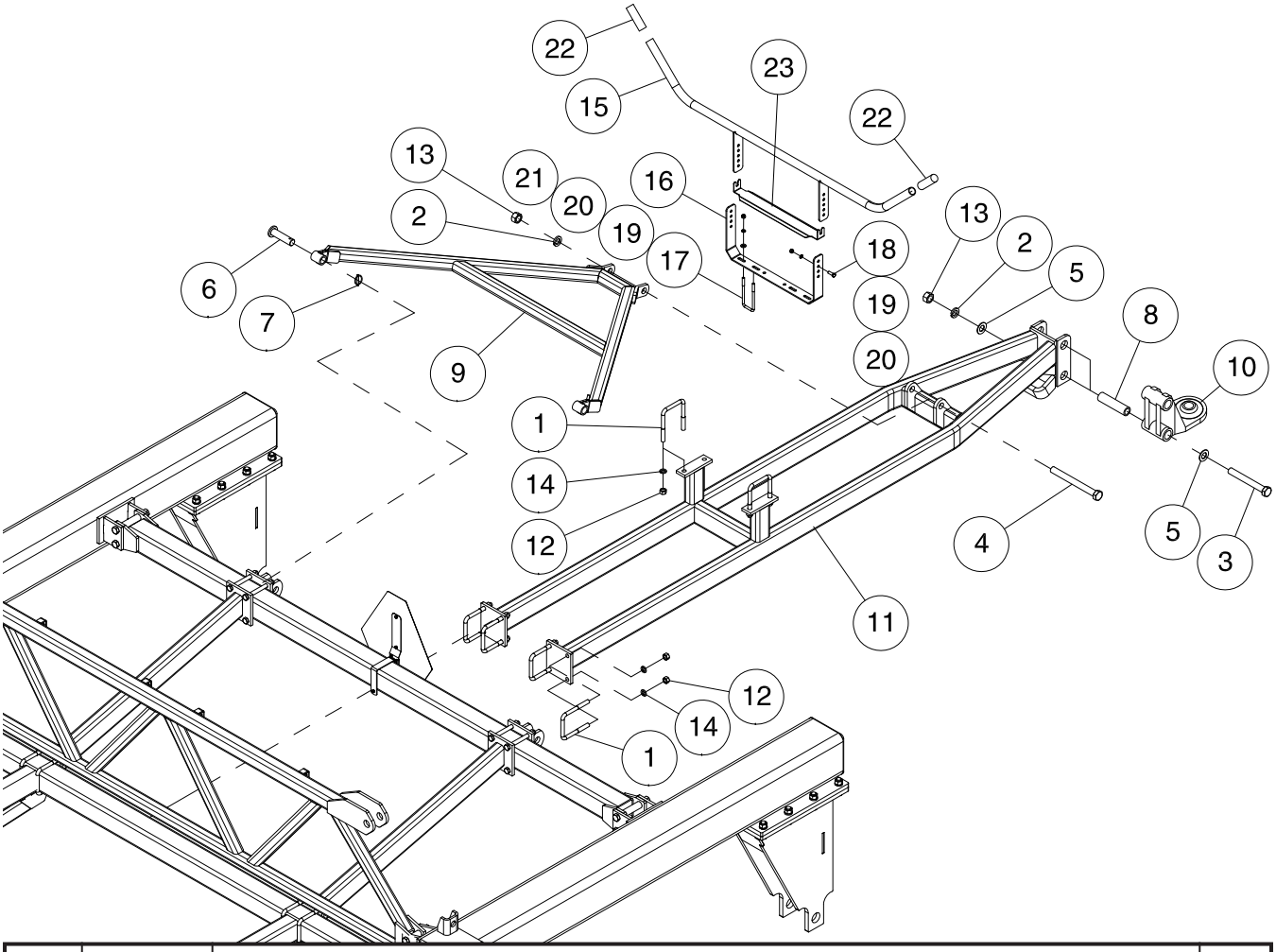

Item	Part No.	Description	Qty
1	C-219	U-Bolt - 5/8 x 4 x 5 9/16	6
2	**C-705**	**Lockwasher - 1**	**3**
3	**C18597**	**Hex Bolt - 1 x 8 Lg**	**2**
4	C18756	Hex Bolt - 1 x 10 Lg	1
5	**F-4490**	**Washer - 1 1/16 ID x 1 7/8 OD x 1/4 Thick**	**4**
6	N16226	Hitch Pin 1 1/8 Dia x 3 11/16 UL	2
7	N19307	Klik Pin - 1/4 x 1 3/4 Lg	2
8	**S44370**	**Bushing - 1 1/2 OD x 1 ID**	**2**
9	S55035	**HD Brace - Hitch - (2 1/2 x 2 1/2 tubing)**	1
10	**S56135**	**Clevis - Hitch**	**1**
11	S55040	Hitch Beam - Quad Steer **- (3 x 4 Beam)**	1
12	W-517	Hex Nut - 5/8	12
13	**W-520**	**Hex Nut - 1**	**3**
14	W-526	Lockwasher - 5/8	12
15	N56370	Bracket - Hose Holder	1
16	N56371	Strap - Hose Holder	1
17	N15097	U-Bolt - 3/8 x 2 x 5 UL	2
18	W-475	Hex Bolt - 3/8 x 1 Lg	4
19	W-514	Hex Nut - 3/8	8
20	W-523	Lockwasher - 3/8	8
21	D-5489	Flatwasher - 13/32 ID x 13/16 OD x 16 Ga	4
22	N37049	Rubber Grip	2
23	N69148	Support - Hydraulic Hoses	1
	S46506	**HD Kit - Quad Steer - C2 -** (Includes all items Except 15 - 23)	

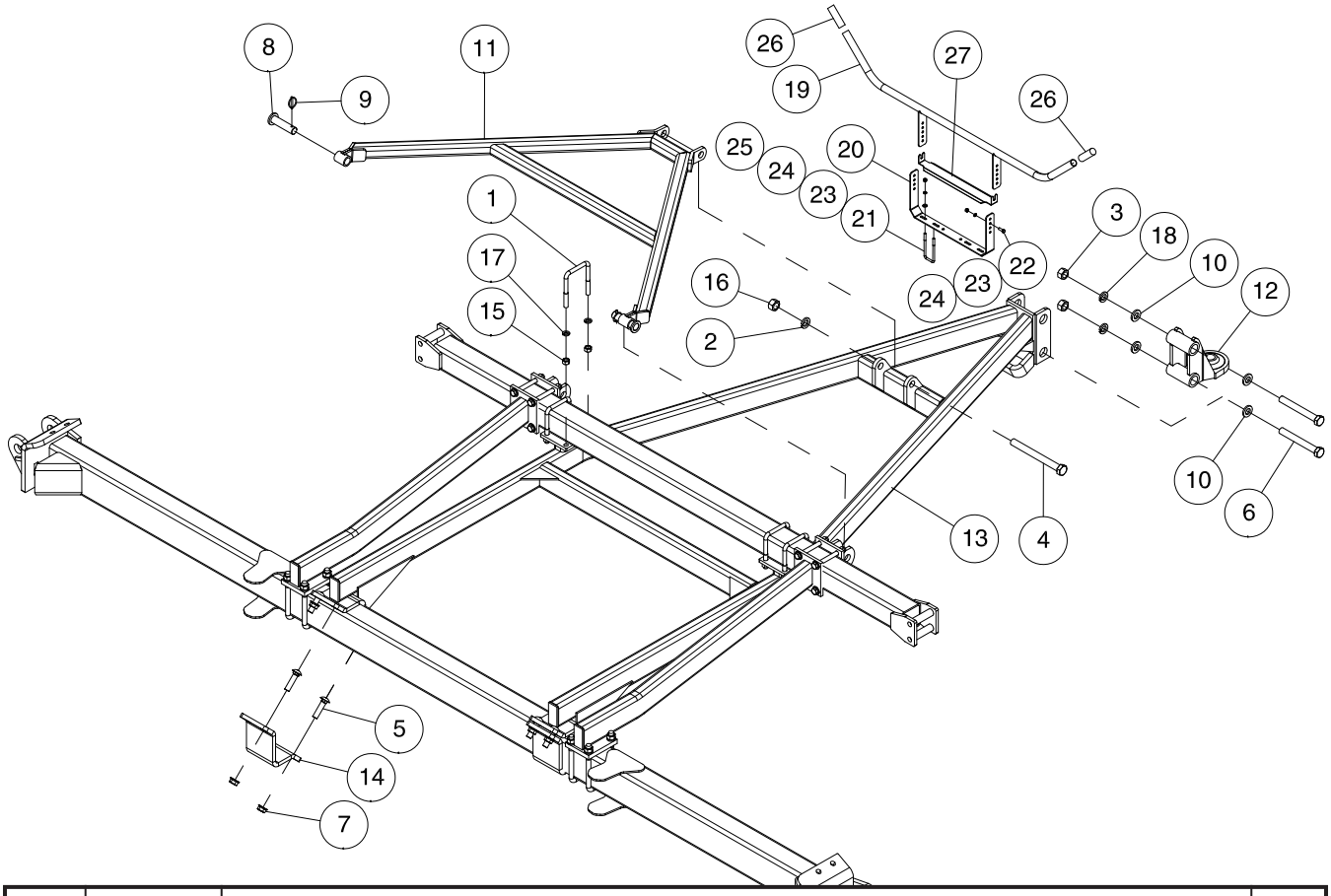

Item	Part No.	Description	Qty
1	C-219	U-Bolt - 5/8 x 4 x 5 9/16	4
2	C-705	Lockwasher - 1	1
3	W-520	Hex Nut - 1	2
4	C18756	Hex Bolt - 1 x 10 Lg	1
5	C33957	Carriage Bolt - 3/4 x 3 Lg	8
6	C18597	Hex Bolt - 1 x 8 Lg	2
7	D12942	Flange Lock Nut - 3/4	8
8	N16226	Hitch Pin - 1 18 Dia x 3 11/16 UL	2
9	N19307	Klik Pin - 1/4 x 1 3/4 Lg	2
10	F-4490	Washer - 1 1/32 ID x 1 7/8 OD x 1/4 Thick	4
11	**S55035**	**HD Brace - Hitch - (2 1/2 x 2 1/2 tubing)**	**1**
12	S56135	Hitch Clevis - Rear	1
13	**S55045**	**HD Hitch Beam - Quad Steer - (3 x 4 Beam)**	**1**
14	S51353	Mounting Plate	2
15	W-517	Hex Nut - 5/8	16
16	W-520	Hex Nut - 1	1
17	W-526	Lockwasher - 5/8	16
18	C-705	Lockwasher - 1	2
19	N56370	Bracket - Hose Holder	1
20	N56371	Strap - Hose Holder	1
21	N15098	U-Bolt - 3/8 x 4 x 5 UL	2
22	W-475	Hex Bolt - 3/8 x 1 Lg	4
23	W-514	Hex Nut - 3/8	8
24	W-523	Lockwasher - 3/8	8
25	D-5489	Flatwasher - 13/32 ID x 13/16 OD x 16 Ga	4
26	N37049	Rubber Grip	2
27	N69148	Support - Hydraulic Hoses	1

For use on the following models:

9365, 9450 Tow Between

9365, 9450 and 9535 Tow Behind

9445, 9550 and 9650 Tow Behind

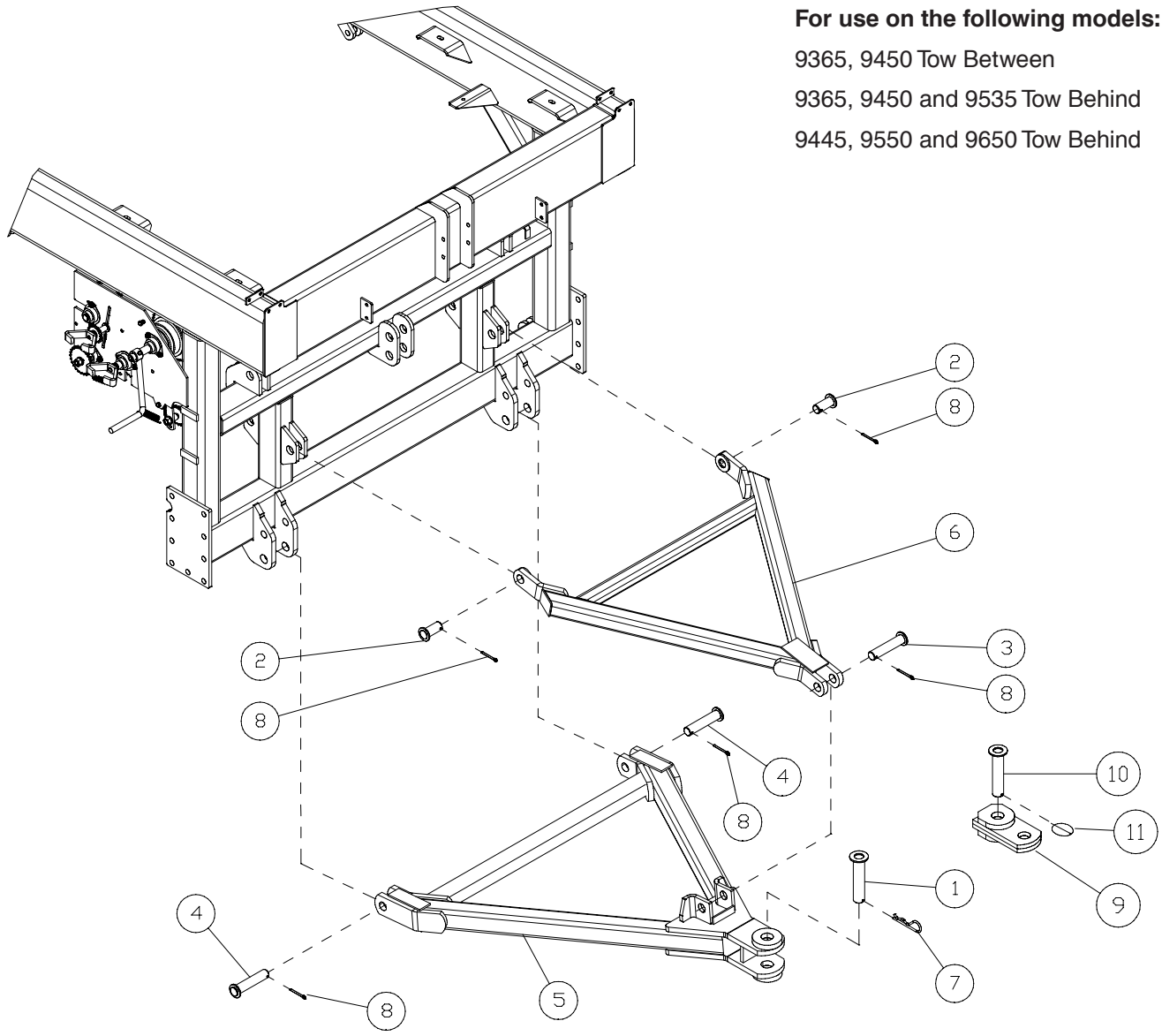

Item	Part No.	Description	Qty
1	N49640	Pin - 1 1/2 Dia x 6 1/2 UL	1
2	N28997	Pin - 1 1/4 Dia x 2 1/4 UL	2
3	N28998	Pin - 1 1/4 Dia x 4 3/4 UL	1
4	N32735	Pin - 1 1/4 Dia x 5 1/4 UL	2
5	N36392	Rear Tow Hitch	1
6	N44595	Upper Hitch Link	1
7	P1318510	Hairpin - #19 - 1/4 x 4 3/8 Lg	1
8	D-5239	Cotter Pin - 1/4 x 2 1/4 Lg	5
9	N37335	Hitch - Single Tongue	1
10	N37176	Pin - 1 1/2 Dia x 6 7/16 UL	1
11	N37162	Klick Pin - 5/16 x 2 11/32 Lg	1
	N38098	Kit Single Tongue Hitch (Includes items 9 to 11)	

Notes

Section 6:
Wheel & Hub

Rear Hub & Tire 6-2
- Single Tire - 9365, 9450 and 9535 6-2
- Single Tire - Tow Behind - 9445, 9550 and 9650 - Prior to 2016 6-2
- Single Tire - Tow Behind - 9445, 9550 and 9650 - 2016 to Present 6-3
- 520 Dual Tire Option 6-4
- 800 Dual Option - Tow Behind - 9365, 9450 and 9535 6-5
- 800 Dual Option - Tow Behind - 9445, 9550 and 9650 - Prior to 2016 6-5
- 800 Dual Tire - Tow Between - 9445, 9550 and 9650 - Prior to 2016 6-6
- 800 Dual Tire - 9445, 9550 and 9650 - 2016 to Present 6-7
- 800 Dual Tire - 9800 - Prior to 2016 6-8
- Dual Tires - 9800 and 91000 - 2016 to 2020 6-9
- Dual Tires - 9800 and 91000 - 2020 to 2022 6-10
- Dual Tires - 9800 and 91000 - 2022 to Present 6-11

Front Hub & Tire 6-12
- Front Castor Axle - Tow Behind - 9365 and 9450 6-12
- Quad Steer Axle - 9365, 9450 and 9535 - Prior to 2021 6-13
- Quad Steer Axle - 9445, 9550 and 9650 - Prior to 2015 6-13
- Quad Steer Axle - 9365, 9450 and 9535 - 2021 to Present 6-14
- Quad Steer Axle - 9445, 9550 and 9650 - 2015 to Present 6-14
- Quad Steer Axle - 9800 and 91000 6-15

Rear Hub & Tire
Single Tire - 9365, 9450 and 9535
Single Tire - Tow Behind - 9445, 9550 and 9650 - Prior to 2016

Rear Axle

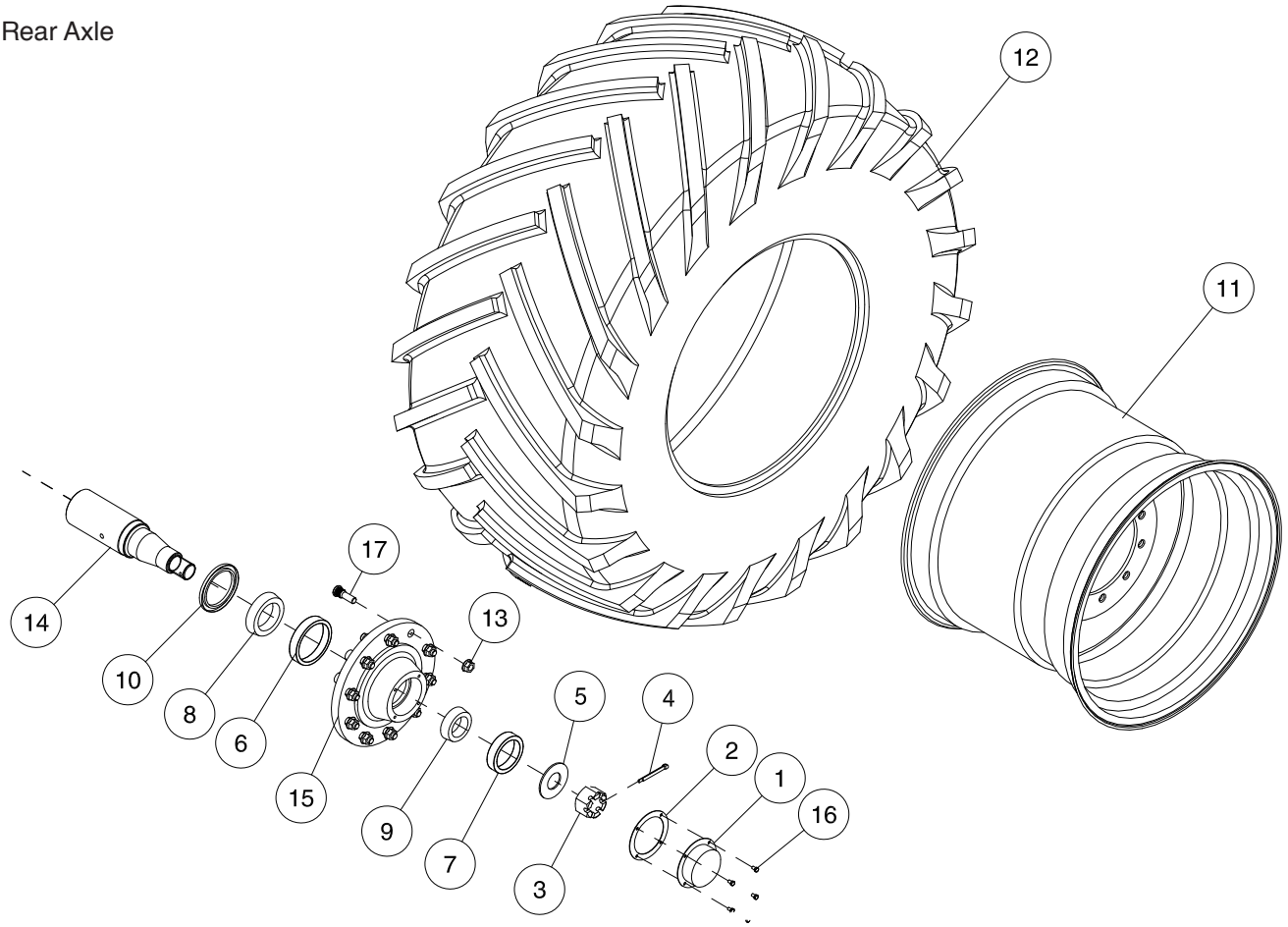

Item	Part No.	Description	Qty
1	N33551	Dust Cap - DC28	1
2	N33554	Gasket - SE59	1
3	N33243	Slotted Hex Nut - 2	1
4	N33244	Cotter Pin - 3/8 x 3 1/2 Lg	1
5	N33245	Flatwasher - 2 1/8 ID x 4 1/2 OD x 3/16 Thick	1
6	N33547	Bearing Cup - HM218210	1
7	N33548	Bearing Cup - HM212010	1
8	N33549	Bearing Cone - Inner - HM218248	1
9	N33550	Bearing Cone - Outer - HM212049	1
10	N33552	Seal - SE55	1
11	N36468	Rim - DW27 x 32	1
12	N36353	Tire - 30.5 x 32 (12 Ply Rating) All Weather	1
	N36232	Tire - 30.5 x 32 (14 Ply Rating) Lug	1
	N36233	Tire - 800/65 R32 - L1 135 - Lug	1
	N42159	Tire - 900/60 R32 - 176A8 - Lug	1
13	N13958	Flange Wheel Nut - 3/4-16 UNF - Grade 8	10
14	N32871	Spindle - 4 1/2 Dia	1
15	N36140	Hub - 10 Bolt - 20,000 lb (Includes Items 6, 7 and 17)	1
16	D-5247	Hex Bolt - 5/16 x 1/2 Lg	4
17	N45120	Press-In Wheel Stud - 3/4-16 UNF x 3 9/32 Lg - Grade 8	10
18	N13968	Valve Stem - TR618A (Not Shown)	1
19	N25611	Rim Hole Plug - 5/8 Brass (Not Shown)	1
	N36138	Hub and Spindle Assembly	

Rear Hub & Tire
Single Tire - Tow Behind - 9445, 9550 and 9650 - 2016 to Present

Rear Axle

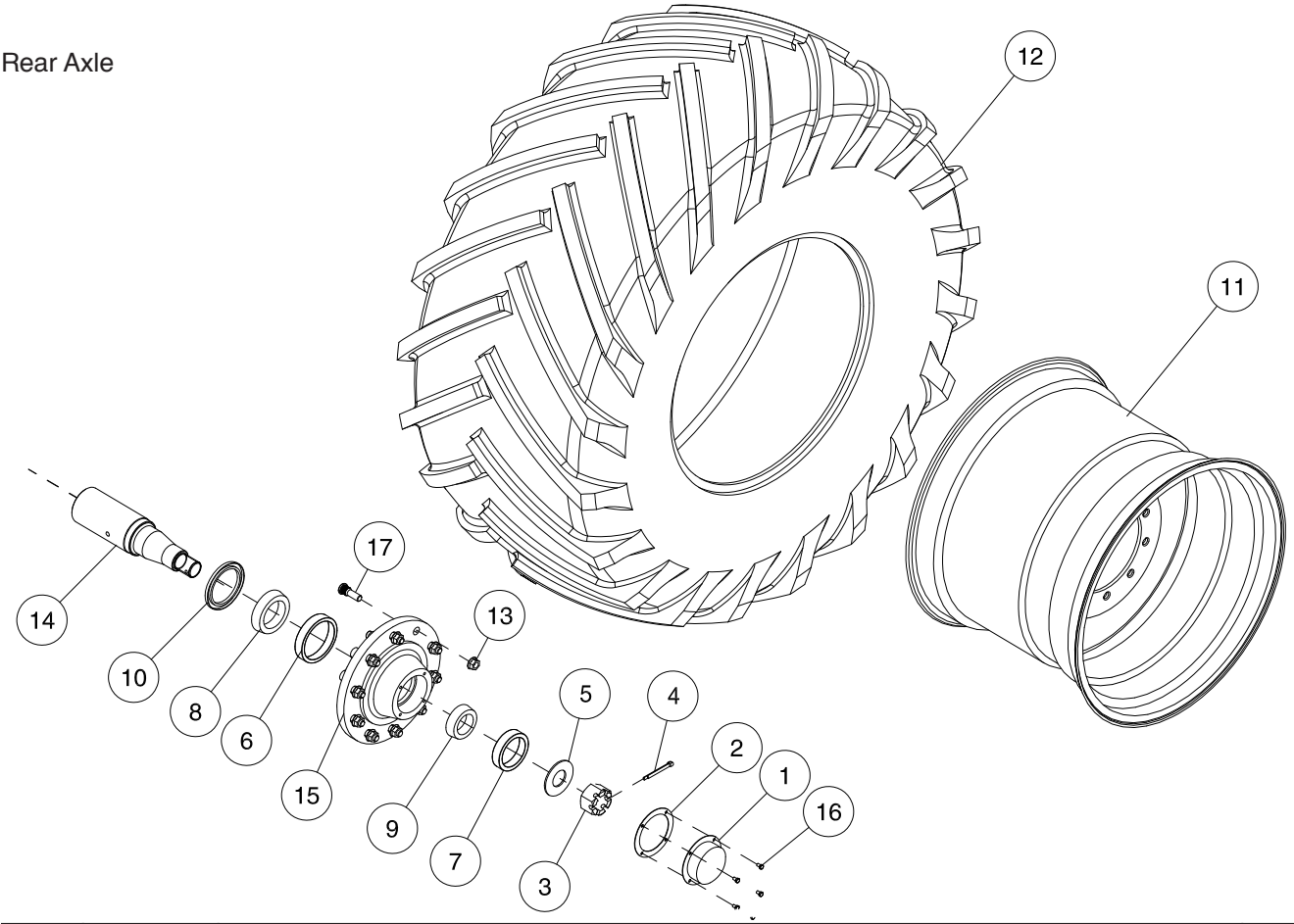

Item	Part No.	Description	Qty
1	N49589	Dust Cap	1
2	N49588	Gasket	1
3	N49597	Slotted Hex Nut - 2 1/2	1
4	N33244	Cotter Pin - 3/8 x 3 1/2 Lg	1
5	N49598	Flatwasher - 2 5/8 ID - WA89	1
6	N49591	Bearing Cup - Inner - TRB10311	1
7	N49592	Bearing Cup - Outer - TRB10333	1
8	N49593	Bearing Cone - Inner - TRB10322	1
9	N49594	Bearing Cone - Outer - TRB10344	1
10	N49587	Dust Seal - SE78	1
11	N36468	Rim - DW27 x 32	1
	N71402	Rim - DW23B x 38 - GKN - Narrow Transport	1
12	N42159	Tire - 900/60 R32 - 176A8 - Lug	1
	N71403	Tire - 710/70 R38 TL - Mitas - GKN - Narrow Transport	1
13	N13958	Flange Wheel Nut - 3/4-16 UNF - Grade 8	10
14	**N53660**	**Spindle - 6 Dia**	**1**
	N53364	**Spindle - Digi-Star**	
15	N60390	Hub - 10 Bolt - 30,000 lb (Includes Items 6, 7 and 17)	1
16	D-5247	Hex Bolt - 5/16 x 1/2 Lg	4
17	N45120	Press-In Wheel Stud - 3/4-16 UNF x 3 9/32 Lg - Grade 8	10
18	N13968	Valve Stem - TR618A (Not Shown)	1
19	N25611	Rim Hole Plug - 5/8 Brass (Not Shown)	1
	N60385	**Hub and Spindle Assembly**	
	N60395	**Hub and Spindle Assembly - Digi-Star**	

Rear Hub & Tire
520 Dual Tire Option

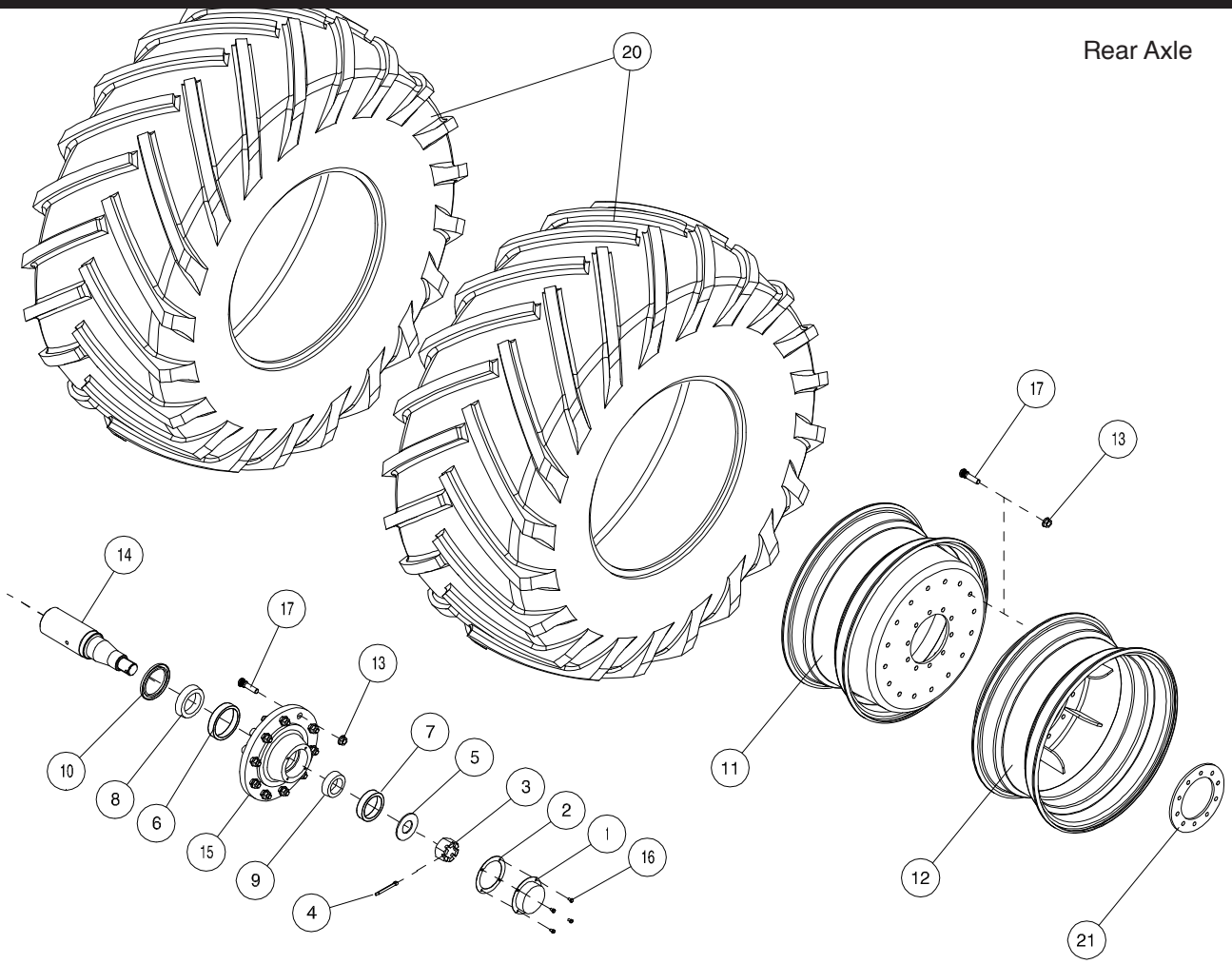

Item	Part No.	Description	Qty
1	N33551	Dust Cap - DC28	1
2	N33554	Gasket - SE59	1
3	N33243	Slotted Hex Nut - 2	1
4	N33244	Cotter Pin - 3/8 x 3 1/2	1
5	N33245	Flatwasher	1
6	N33547	Bearing Cup - HM218210	1
7	N33548	Bearing Cup - HM212010	1
8	N33549	Bearing Cone - Inner - HM218248	1
9	N33550	Bearing Cone - Outer - HM212049	1
10	N33552	Seal - SE55	1
11	N47406	Rim - 16 x 38 - Inner Dual	1
12	N47407	Rim - 16 x 38 - Outer Dual	1
13	N47408	Flange Wheel Nut - 7/8-14 UNF - Grade 8	26
14	N32871	Spindle - 4 1/2 Dia	1
15	N47412	Hub - 10 Bolt - 20,000 lb (Includes Items 6 and 7)	1
16	D-5247	Hex Bolt - 5/16 x 1/2 Lg	4
17	N47411	Press-In Wheel Stud - 7/8-14 UNF x 3 1/2 Lg - Grade 8	26
18	N13968	Valve Stem - TR618A (Not Shown)	1
19	N25611	Rim Hole Plug - 5/8 Brass (Not Shown)	2
20	N45092	Tire - 520/85R38 - 155A8 - Lug	2
21	N53760	Plate - Wheel Clamp	1
	N46786	Hub and Spindle Assembly	

Rear Hub & Tire
800 Dual Option - Tow Behind - 9365, 9450 and 9535
800 Dual Option - Tow Behind - 9445, 9550 and 9650 - Prior to 2016

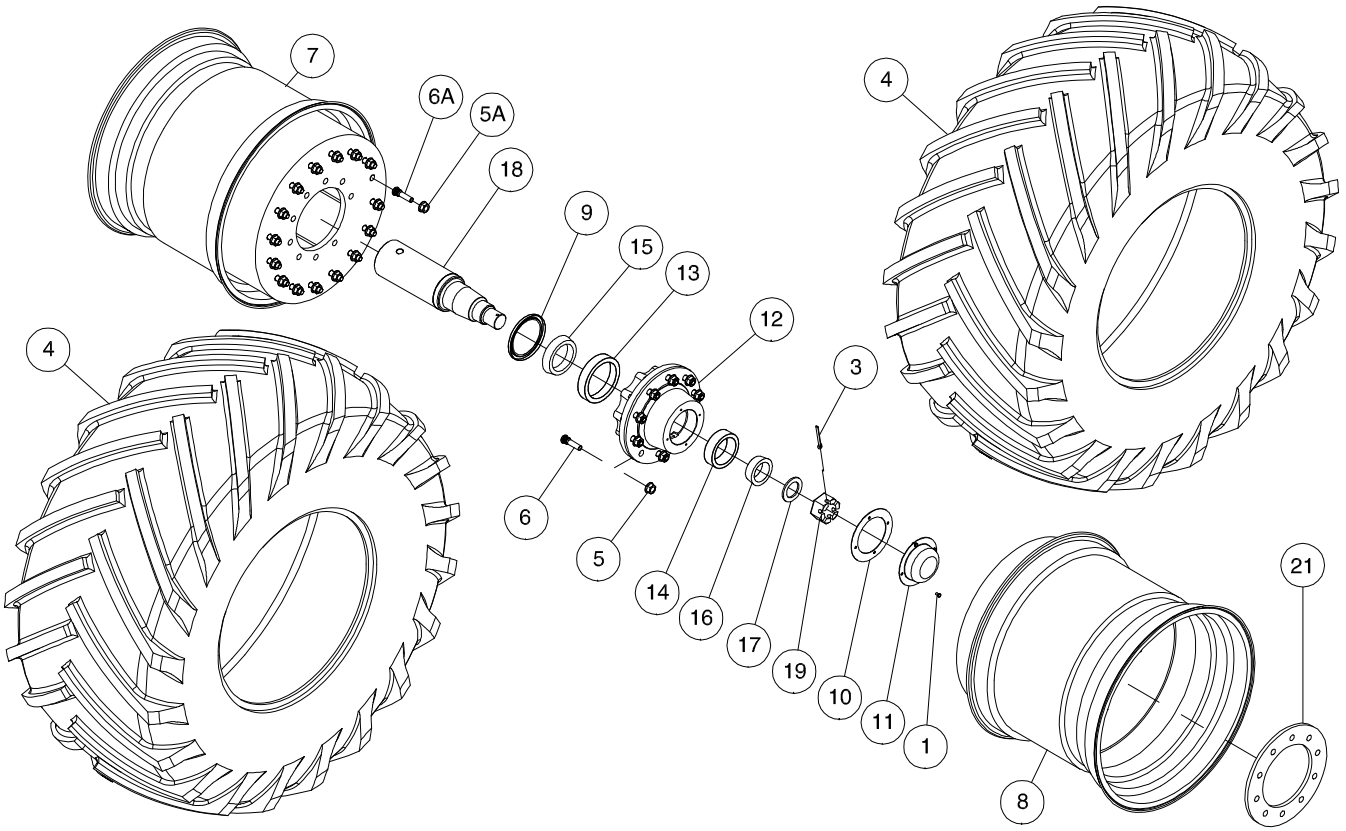

Item	Part No.	Description	Qty
1	D-5247	Hex Bolt - 5/16 x 1/2 Lg	4
2	N51387	Valve Stem - Low Profile - TV-6008C (Not Shown)	2
3	N33244	Cotter Pin - 3/8 x 3 1/2 Lg	1
4	N36233	Tire - 800/65R32 Radial	2
5	N47408	Flange Wheel Nut - 7/8-14 UNF - Grade 8	10
5A	N62912	Flange Wheel Nut - 3/4-16 UNF - Grade 8	16
6	N47411	Press-In Wheel Stud - 7/8 x 3 1/2 Lg - 14 UNF - Grade 8	10
6A	N51388	Press-In Wheel Stud - 3/4 x 2 1/4 Lg - 16 UNF - Grade 8	16
7	N50601	Rim - Inner Dual - 27 x 32 Rim (Includes items 5A and 6A) (Rim only N55061)	1
8	N50602	Rim - Outer Dual - 27 x 32 Rim	1
9	N33552	Dust Seal - SE55	1
10	N33554	Gasket - SE59	1
11	N33551	Dust Cap - DC28	1
12	N47412	Hub - 10 Bolt - 20,000 lb (Includes Items 6 and 7)	1
13	N33547	Bearing Cup - HM218210	1
14	N33548	Bearing Cup - HM212010	1
15	N33549	Bearing Cone - Inner - HM218248	1
16	N33550	Bearing Cone - Outer - HM212049	1
17	N33245	Flatwasher	1
18	N32871	Spindle - 4 1/2 Dia	1
19	N33243	Slotted Hex Nut - 2	1
20	N25611	Rim Hole Plug - 5/8 Brass (Not Shown)	2
21	N53760	Plate - Wheel Clamp	1
	N46786	Hub and Spindle Assembly	

Rear Hub & Tire
800 Dual Tire - Tow Between - 9445, 9550 and 9650 - Prior to 2016

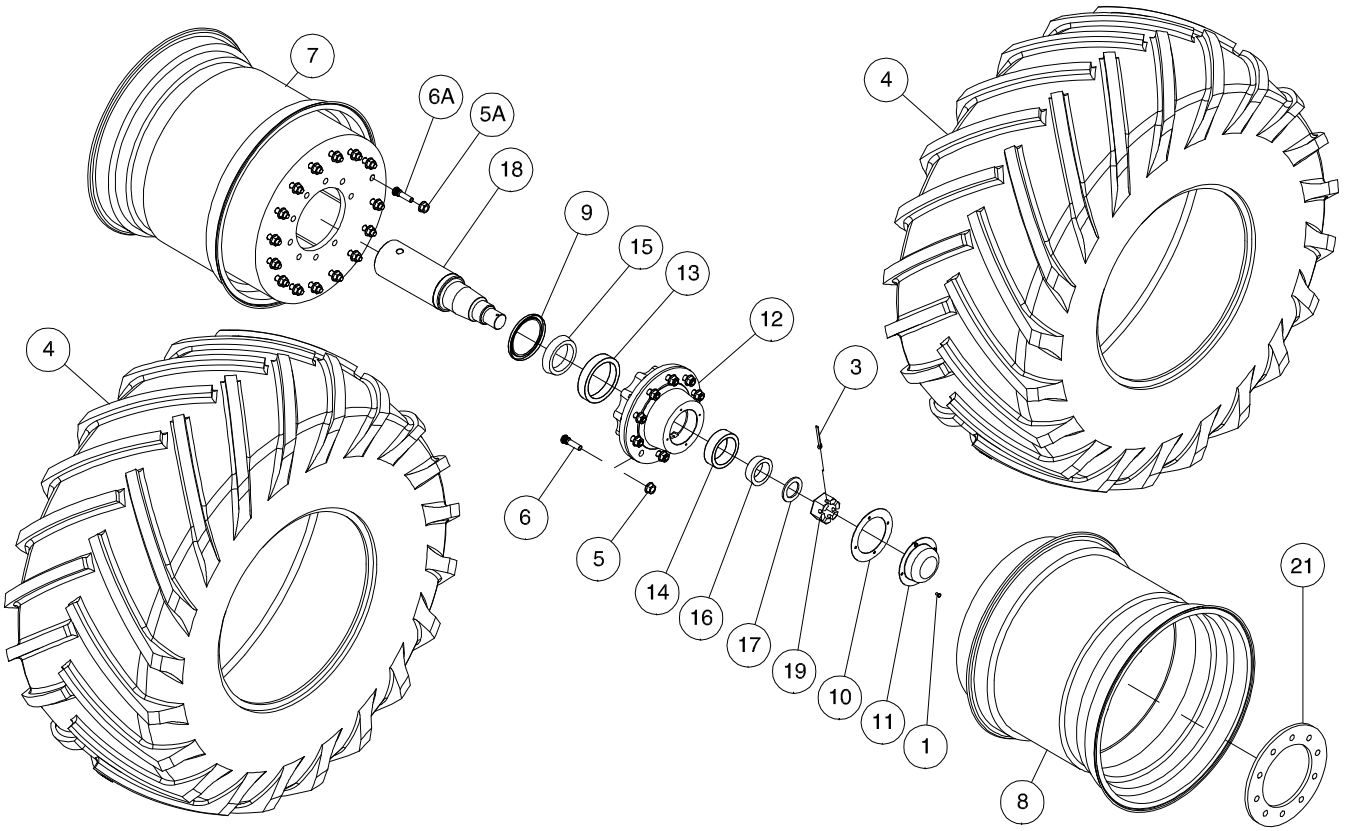

Item	Part No.	Description	Qty
1	D-5247	Hex Bolt - 5/16 x 1/2 Lg	4
2	N51387	Valve Stem - Low Profile - TV-6008C (Not Shown)	2
3	N33244	Cotter Pin - 3/8 x 3 1/2 Lg	1
4	N36233	Tire - 800/65R32 Radial	2
5	N47408	Flange Wheel Nut - 7/8-14 UNF - Grade 8	10
5A	N62912	Flange Wheel Nut - 3/4-16 UNF - Grade 8	16
6	N55220	Press-In Wheel Stud - 7/8 x 4 Lg - 14 UNF - Grade 8	10
6A	N51388	Press-In Wheel Stud - 3/4 x 2 1/4 Lg - 16 UNF - Grade 8	16
7	N50601	Rim - Inner Dual - 27 x 32 Rim (Includes items 5A and 6A) (Rim only N55061)	1
8	N50602	Rim - Outer Dual - 27 x 32 Rim	1
9	N49587	Dust Seal	1
10	N49588	Rubber Gasket	1
11	N49589	Dust Cap	1
12	N49590	Hub - 10 Bolt - 30,000 lb (Includes Items 6, 13 & 14)	1
13	N49591	Inner Bearing Cup	1
14	N49592	Outer Bearing Cup	1
15	N49593	Inner Bearing Cone	1
16	N49594	Outer Bearing Cone	1
17	N49598	Flatwasher - 2 1/2	1
18	N49596	Spindle - 6 Diameter	1
19	N49597	Slotted Hex Nut - 2 1/2	1
20	N49696	Grease Fitting - Press In (Not Shown)	1
21	N53760	Plate - Wheel Clamp	1
	N49595	Hub & Spindle Assembly (Includes Items 1, 3, 5, 9, 10, 11, 12, 15, 16, 17, 18 & 19)	

Rear Hub & Tire
800 Dual Tire - 9445, 9550 and 9650 - 2016 to Present

Rear Axle

Note: Some models were equipped with GKN Hub and Spindles. These assemblies can be identified by the "GKN" stamped in the Dust Cap. See next page for GKN Hub and Spindles parts details "800 Dual Tire - 9800 - Prior to 2016"

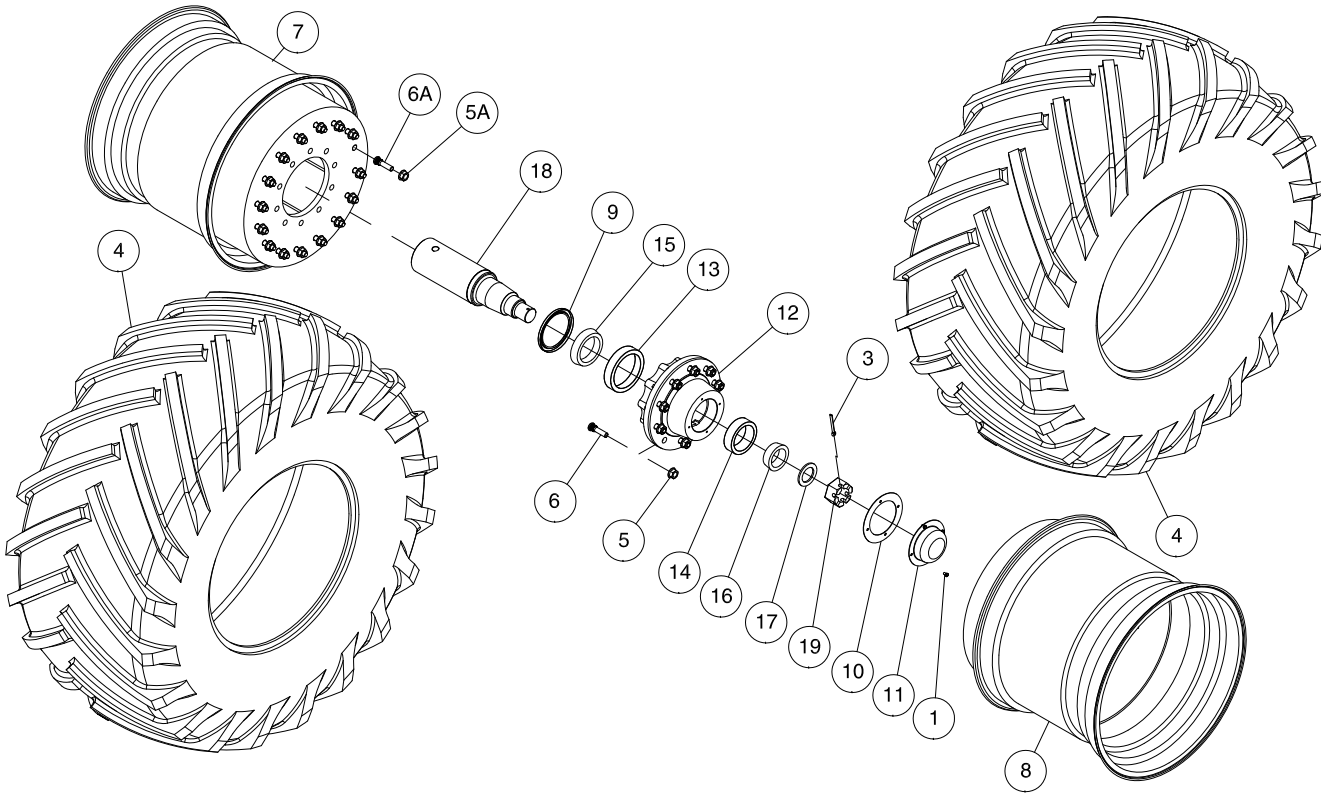

Item	Part No.	Description	Qty
1	D-5247	Hex Bolt - 5/16 x 1/2 Lg	4
2	N51387	Valve Stem - Low Profile - TV-6008C (Not Shown)	2
3	N33244	Cotter Pin - 3/8 x 3 1/2 Lg	1
4	N36233	Tire - 800/65R32 Radial	2
5	N47408	Flange Wheel Nut - 7/8-14 UNF - Grade 8	10
5A	N62912	Flange Wheel Nut - 3/4-16 UNF - Grade 8	16
6	**N55220**	**Press-In Wheel Stud - 7/8 x 4 Lg - 14 UNF - Grade 8**	**10**
6A	N51388	Press-In Wheel Stud - 3/4 x 2 1/4 Lg - 16 UNF - Grade 8	16
7	N50601	Rim - Inner Dual - 27 x 32 Rim (Includes items 5A and 6A) (Rim only N55061)	1
8	N55061	Rim - Outer Dual - 27 x 32 Rim	1
9	N49587	Dust Seal	1
10	N49588	Rubber Gasket	1
11	N49589	Dust Cap	1
12	**N49590**	**Hub - 10 Bolt - 30,000 lb (Includes Items 6, 13 & 14)**	**1**
13	N49591	Inner Bearing Cup	1
14	N49592	Outer Bearing Cup	1
15	N49593	Inner Bearing Cone	1
16	N49594	Outer Bearing Cone	1
17	N49598	Flatwasher - 2 5/8 ID - WA89	1
18	N53660	Spindle - 6 Diameter	1
18A	N53364	Spindle - 6 Diameter - DIGI-STAR	
19	N49597	Slotted Hex Nut - 2 1/2	1
20	N49696	Grease Fitting - Press In (Not Shown)	1
	N53655	Hub & Spindle Assembly (Includes Items 1, 3, 5, 9, 10, 11, 12, 15, 16, 17, 18, 19 & 20)	
	N53665	DIGI-STAR Hub & Spindle Assembly (Includes 1, 3, 5, 9, 10, 11, 12, 15, 16, 17, 18A & 19)	

Rear Hub & Tire
800 Dual Tire - 9800 - Prior to 2016

Rear Axle

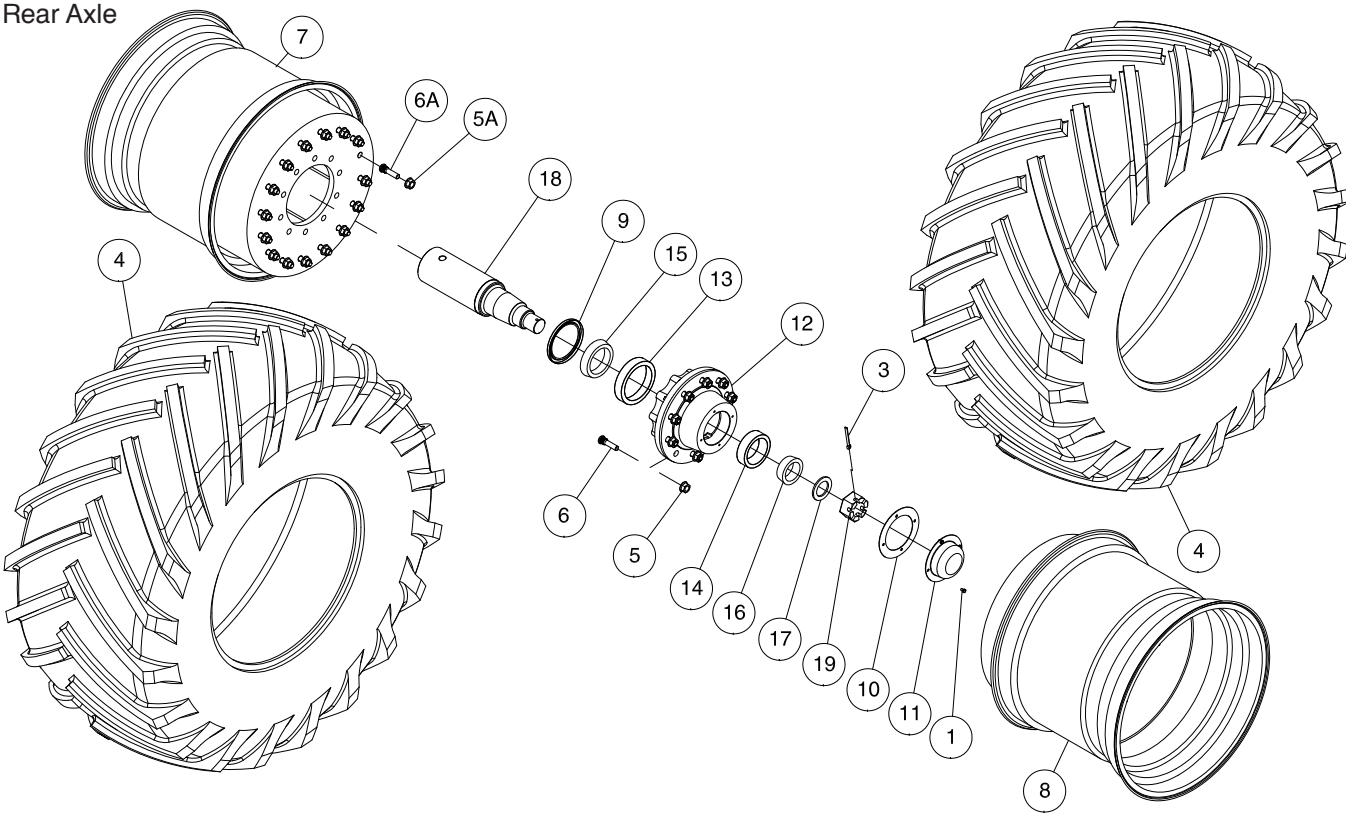

Item	Part No.	Description	Qty
1	D-5247	Hex Bolt - 5/16 x 1/2 Lg	8
2	N51387	Valve Stem - Low Profile - TV-6008C (Not Shown)	2
3	N55209	Spring Pin - 3/8 x 4 Lg	1
4	N36233	Tire - 800/65R32 Radial	2
5	N55218	Flange Wheel Nut - M22 x 1.5 Securex Flange Nut - Gr 10.9	10
5A	N62912	Flange Wheel Nut - 3/4-16 UNF - Grade 8	16
6	N55217	Press-In Wheel Stud - M22 x 1.5 Thread x 4 Lg - Gr. 10.9	10
6A	N51388	Press-In Wheel Stud - 3/4 x 2 1/4 Lg - 16 UNF - Grade 8	16
7	N50601	Rim - Inner Dual - 27 x 32 Rim (Includes items 5A and 6A) (Rim only N55061)	1
8	N55061	Rim - Outer Dual - 27 x 32 Rim	1
9	N55210	Dust Seal	1
10	N55216	Rubber Gasket	1
11	N55215	Dust Cap	1
12	N55202	**GKN** Hub Assembly - 10 Bolt - 35,000 lb (Includes Items 6, 13, 14 & 20)	1
13	N55211	Inner Bearing Cup	1
14	N55213	Outer Bearing Cup	1
15	N55212	Inner Bearing Cone	1
16	N55214	Outer Bearing Cone	1
17	N55208	Flatwasher - 4 1/2 OD x 2 5/8 ID x 1/4 Thick	1
18	N55206	Spindle - 6 Diameter	1
18A	N55240	Spindle - 6 Diameter - DIGI-STAR	
19	N55207	Slotted Hex Nut - 2 1/2 - 12 UN	1
20	N55204	Grease Fitting - Press In (Not Shown)	1
	N55225	Hub & Spindle Assembly (Includes Items 1, 3, 5, 9, 10, 11, 12, 15, 16, 17, 18 & 19)	
	N55235	DIGI-STAR Hub & Spindle Assembly (Includes 1, 3, 5, 9, 10, 11, 12, 15, 16, 17, 18A & 19)	

Rear Hub & Tire
Dual Tires - 9800 and 91000 - 2016 to 2020

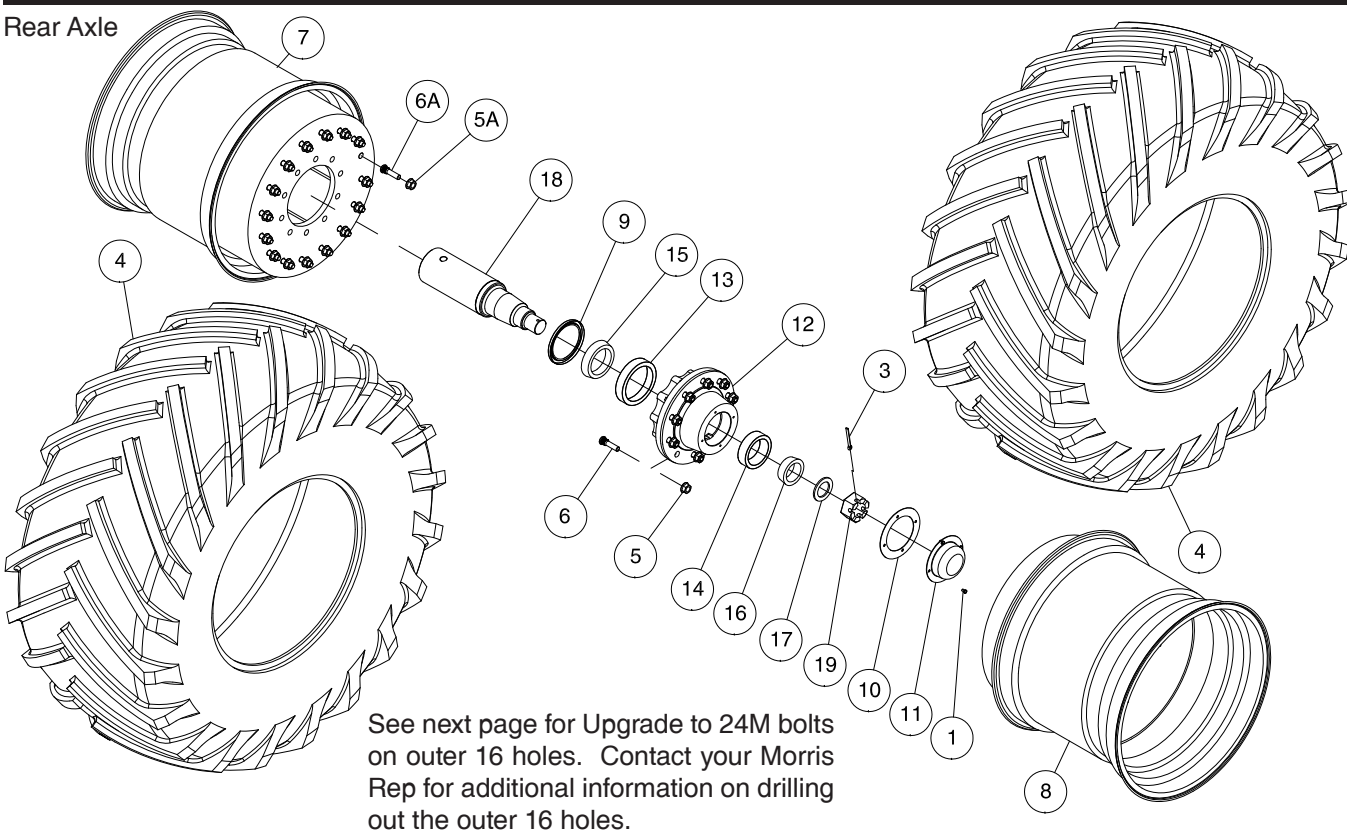

See next page for Upgrade to 24M bolts on outer 16 holes. Contact your Morris Rep for additional information on drilling out the outer 16 holes.

Item	Part No.	Description	Qty
1	D-5247	Hex Bolt - 5/16 x 1/2 Lg	8
2	N51387	Valve Stem - Low Profile - TV-6008C (Not Shown)	2
3	N55209	Spring Pin - 3/8 x 4 Lg	1
4	N55053	Tire - 800/70R38 Radial - Standard - Replaced by N71474	2
	N55243	Tire - 850/80R38 Radial - Optional	
5	N55218	Flange Wheel Nut - M22 x 1.5 Securex Flange Nut - Gr 10.9	10
5A	N62912	Flange Wheel Nut - 3/4-16 UNF - Grade 8	16
6	N55221	Press-In Wheel Stud - M22 x 1.5 Thread x 118mm Lg - Gr. 10.9	10
6A	N51388	Press-In Wheel Stud - 3/4 x 2 1/4 Lg - 16 UNF - Grade 8	16
7	N55051	Rim - Inner Dual - 28 x 38 Rim (Includes items 5A and 6A) (Rim only N55052)	1
8	N55052	Rim - Outer Dual - 28 x 38 Rim	1
9	N55210	Dust Seal	1
10	N55216	Rubber Gasket	1
11	N55215	Dust Cap	1
12	N55202	**GKN** Hub Assembly - 10 Bolt - 35,000 lb (Includes Items 6, 13, 14 & 20)	1
13	N55211	Inner Bearing Cup	1
14	N55213	Outer Bearing Cup	1
15	N55212	Inner Bearing Cone	1
16	N55214	Outer Bearing Cone	1
17	N55208	Flatwasher - 4 1/2 OD x 2 5/8 ID x 1/4 Thick	1
18	N55206	Spindle - 6 Diameter	1
18A	N55240	Spindle - 6 Diameter - DIGI-STAR	
19	N55207	Slotted Hex Nut - 2 1/2 - 12 UN	1
20	N55204	Grease Fitting - Press In (Not Shown)	1
	N55225	Hub & Spindle Assembly (Includes Items 1, 3, 5, 9, 10, 11, 12, 15, 16, 17, 18 & 19)	
	N55235	DIGI-STAR Hub & Spindle Assembly (Includes 1, 3, 5, 9, 10, 11, 12, 15, 16, 17, 18A & 19)	

Rear Hub & Tire
Dual Tires - 9800 and 91000 - 2020 to 2022

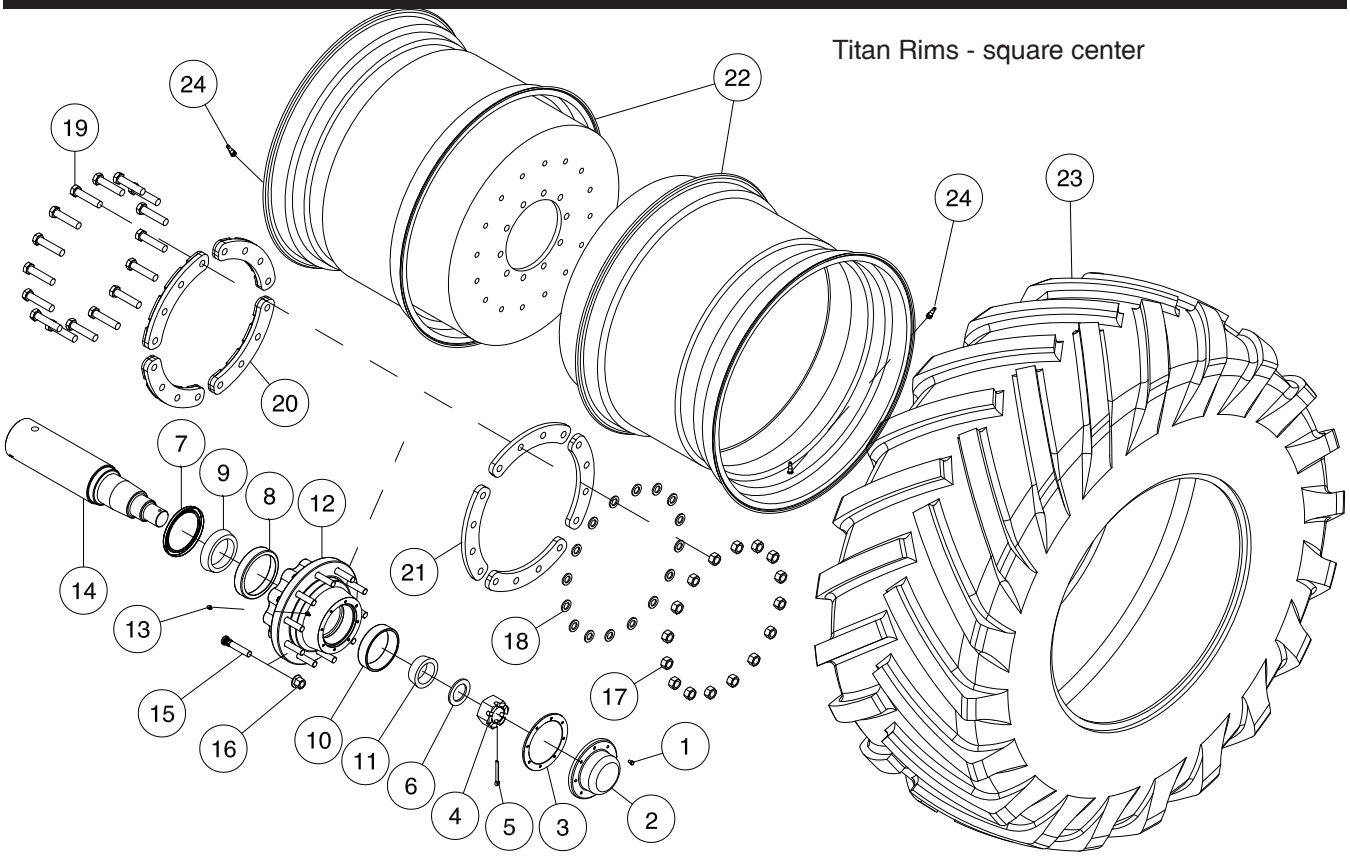

Item	Part No.	Description	Qty
1	D-5247	Hex Bolt - 5/16 x 1/2 Lg	8
2	N55215	Dust Cap	1
3	N55216	Rubber Gasket	1
4	N55207	Slotted Hex Nut - 2 1/2 - 12 UN	1
5	N55209	Spring Pin - 3/8 x 4 Lg	1
6	N55208	Flatwasher - 4 1/2 OD x 2 5/8 ID x 1/4 Thick	1
7	N55210	Dust Seal	1
8	N55211	Inner Bearing Cup	1
9	N55212	Inner Bearing Cone	1
10	N55213	Outer Bearing Cup	1
11	N55214	Outer Bearing Cone	1
12	N55202	**GKN** Hub Assembly - 10 Bolt - 35,000 lb (Includes Items 8, 10, 13 & 15)	1
13	N55204	Grease Fitting - Press In (Not Shown)	1
14	N55206	Spindle - 6 Diameter	1
14A	N55240	Spindle - 6 Diameter - DIGI-STAR	
15	N55221	Press-In Wheel Stud - M22 x 1.5 Thread x 118mm Lg - Gr. 10.9	10
16	N55218	Flange Wheel Nut - M22 x 1.5 Securex Flange Nut - Gr 10.9	10
17	N72188	Hex Nut - M24-3.00 Gr10.9	4
18	N72189	Washer Hardened - M24 (25mm ID x 44mm OD x 4mm Thick)	16
19	N72187	Hex Bolt - M24-3.00 x 110mm Lg Gr10.9	16
20	N72184	Clamp Plate - Inner	1
21	N69613	Clamp Plate - Outer	4
22	**N69465**	Rim - Dual - 28 x 38 Rim (10 inner bolts and 16 outer bolts)	2
23	N71474	Tire - IF800/70R38 CHO - Mitas	2
	N71474	Tire - IF850/70R38 CHO - Mitas - Optional	
24	N51387	Valve Stem - Low Profile - TV-6008C (Not Shown)	2
	N72000	Dual Wheel Hub Adapter Kit - GKN (Includes Items 17,18,19, 20 and 21 for both hubs)	
	N55225	Hub & Spindle Assembly (Includes Items 1 to 12, 14 and 16)	
	N55235	DIGI-STAR Hub & Spindle Assembly (Includes Items 1 to 12, 14A and 16)	

Rear Hub & Tire
Dual Tires - 9800 and 91000 - 2022 to Present

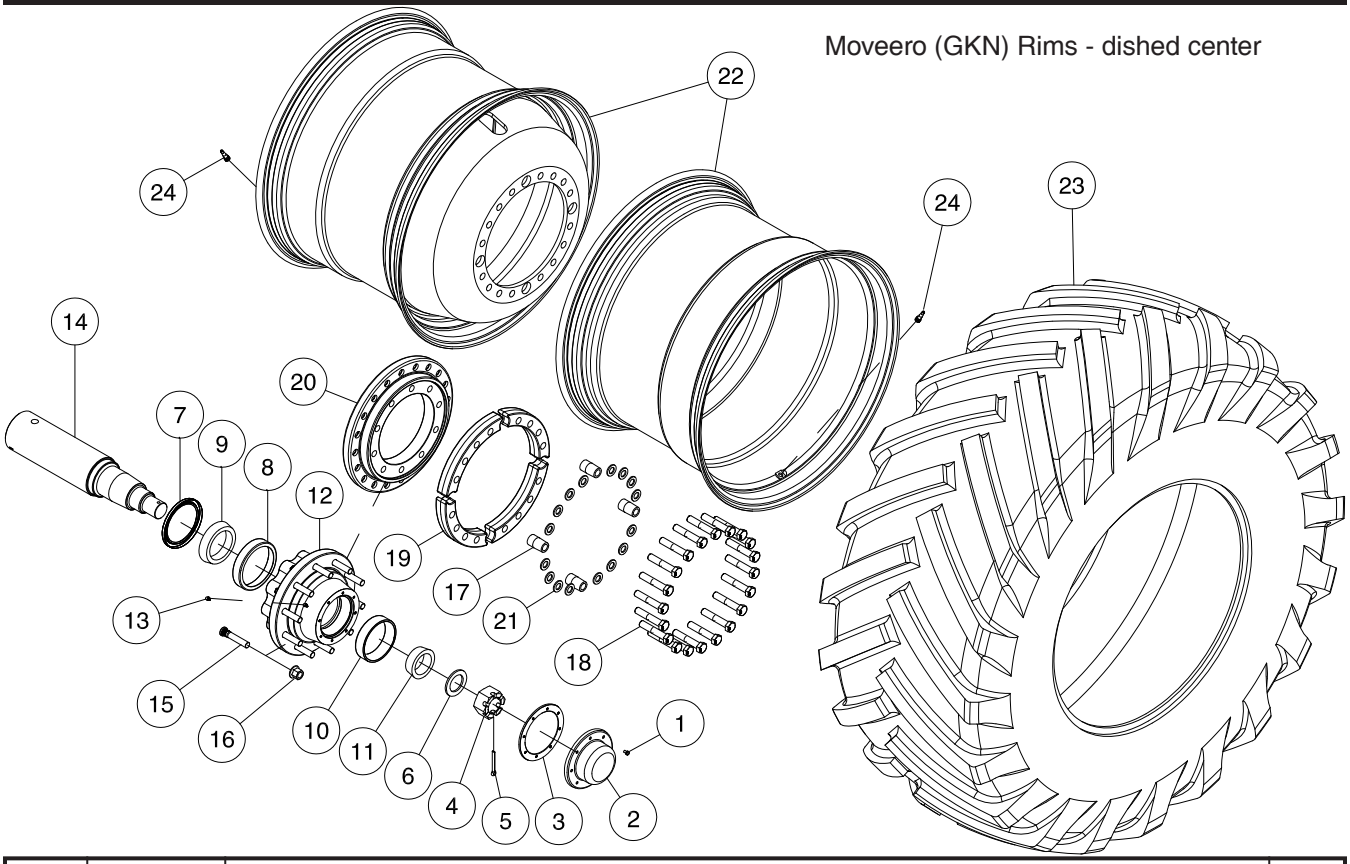

Item	Part No.	Description	Qty
1	D-5247	Hex Bolt - 5/16 x 1/2 Lg	8
2	N55215	Dust Cap	1
3	N55216	Rubber Gasket	1
4	N55207	Slotted Hex Nut - 2 1/2 - 12 UN	1
5	N55209	Spring Pin - 3/8 x 4 Lg	1
6	N55208	Flatwasher - 4 1/2 OD x 2 5/8 ID x 1/4 Thick	1
7	N55210	Dust Seal	1
8	N55211	Inner Bearing Cup	1
9	N55212	Inner Bearing Cone	1
10	N55213	Outer Bearing Cup	1
11	N55214	Outer Bearing Cone	1
12	N55202	**GKN** Hub Assembly - 10 Bolt - 35,000 lb (Includes Items 8, 10, 13 & 15)	1
13	N55204	Grease Fitting - Press In (Not Shown)	1
14	N55206	Spindle - 6 Diameter	1
14A	N55240	Spindle - 6 Diameter - DIGI-STAR	
15	N55221	Press-In Wheel Stud - M22 x 1.5 Thread x 118mm Lg - Gr. 10.9	10
16	N55218	Flange Wheel Nut - M22 x 1.5 Securex Flange Nut - Gr 10.9	10
17	N71469	Hub Adapter Alignment Bushing - GKN	4
18	N71471	Hex Bolt - M24-3.00 x 130mm Lg Gr10.9 - GKN	20
19	N71473	Hub Adapter Spacer Segment - GKN	4
20	N71475	Dual Wheel Hub Adapter - GKN	1
21	N71476	Washer M24 Hardened - GKN	16
22	N71470	Dual Rim - 38 x DW27B - GKN - (20 bolts)	2
23	N71474	Tire - IF800/70R38 CHO - Mitas	2
24	N13968	Valve Stem - TR618A	1
	N71428	Dual Wheel Hub Adapter Assembly - GKN (Includes Items 17 to 21 for only 1 hub)	
	N55225	Hub & Spindle Assembly (Includes Items 1 to 12, 14 and 16)	
	N55235	DIGI-STAR Hub & Spindle Assembly (Includes Items 1 to 12, 14A and 16)	

Front Hub & Tire
Front Castor Axle - Tow Behind - 9365 and 9450

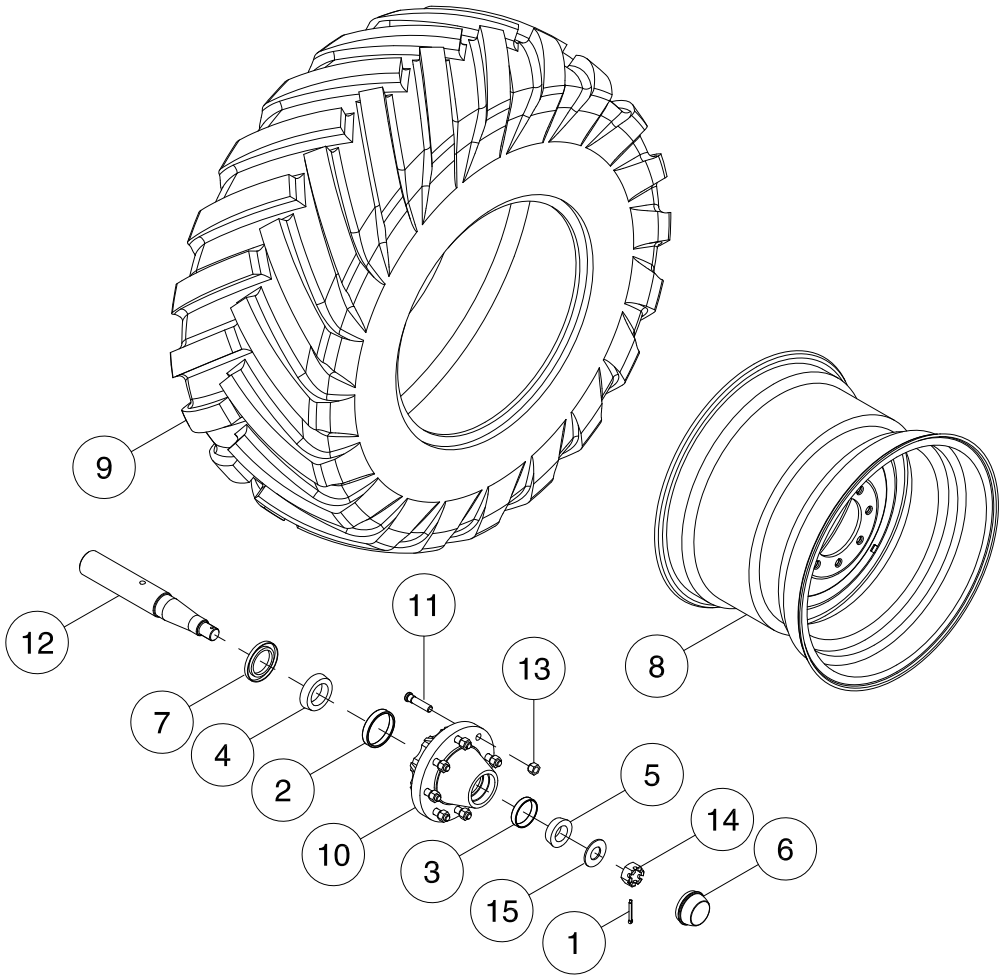

Item	Part No.	Description	Qty
1	W-4181	Cotter Pin - 1/4 x 2	1
2	N19167	Inner Cup - 382 A	1
3	N19168	Outer Cup - LM501310	1
4	N19169	Inner Bearing Cone - 387 AS	1
5	N19170	Outer Bearing Cone - LM501349	1
6	N19171	Dust Cap	1
7	N19172	Shaft Seal - 2 1/2 (C/R #25108)	1
8	N71420	Rim - 24 X DW18 - 8 Bolt - GKN - (N36467 - Rim - DW18 x 24)	1
9	N71421	Tire - 500/70R24 TL - MITAS AC70G - (N40975 - Tire - 500/70 R24 LI 157 Lug)	1
10	N36236	Non-Drive Hub (Includes Items 2, 3 and 11)	1
11	N36242	Wheel Stud - 5/8-18 UNF x 2 3/4 - Grade 8	8
12	N19166	Spindle - 2.5 Dia	1
13	N19586	Tapered Wheel Nut - 5/8 - 18 UNF - Grade 5	8
14	N19484	Hex Slotted Nut - 1 1/4 - 12 UNF	1
15	D-5499	Washer - 1 5/16 ID x 2 3/4 OD x 9 Ga	1
16	N13968	Valve Stem - TR618A (Not Shown)	1
17	N65063	Grease Fitting - Straight - 1/4-28 UNF (Not Shown)	1
	N38017	Hub & Spindle Assembly	

Front Hub & Tire
Quad Steer Axle - 9365, 9450 and 9535 - Prior to 2021
Quad Steer Axle - 9445, 9550 and 9650 - Prior to 2015

Serial number break:
9365 Prior to Serial # 9365211871
9450 Prior to Serial # 9450213961
9535 Prior to Serial # 9535216851
9445 Prior to Serial # 9445155811
9550 Prior to Serial # 9550154821
9650 Prior to Serial # 9650152842

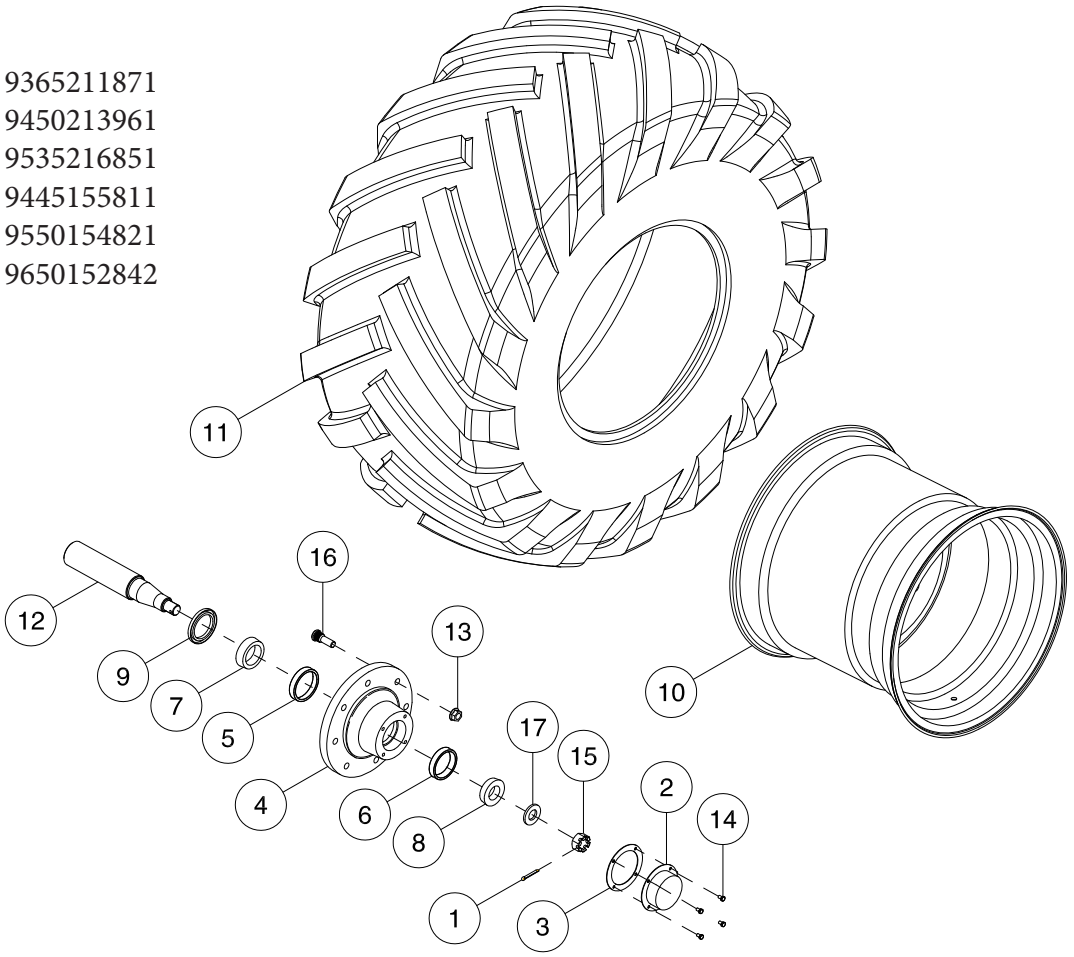

Item	Part No.	Description	Qty
1	2-0483-2	Cotter Key - 3/8 x 3 1/2	1
2	1-0298-1	Grease Cap - #9099831	1
3	* * * * *	Gasket	1
4	1-0559-1	Hub with Studs and Cups - #281680	1
	1-0759-1	Complete Hub Assembly	
5	1-0874-1	Bearing Cup - #3920	1
6	1-0874-1	Bearing Cup - #3920	1
7	1-0872-1	Bearing Cone - #3984	2
8	1-0873-1	Bearing Cone - #3979	2
9	1-0871-1	Grease Seal - #CR32501	1
10	N44659	Rim - 26 x DWH25 - (Replaced by N71416 Rim - 26 x DW25 - 8 Bolt - GKN)	1
11	N44658	Tire - 28LR26 - (Replaced by N71417 Tire - 750/65R26 TL - MITAS SFT)	1
12	3-1431-3	Trunnion Assembly - Left	1
	3-1432-3	Trunnion Assembly - Right	1
13	N13958	Wheel Nut - 3/4-16 UNF - Grade 8	8
14	2-0484-2	Cap Screw - 5/16-18 UNC x 3/4	4
15	N21728	Slotted Nut - 1 1/2-12 UNF	2
16	N13953	Wheel Stud - 3/4 -16 UNF x 2 5/8 Lg - Grade 8	8
17	2-0481-2	Spindle Washer - 1 5/8 ID x 3 OD x 1/4	2
18	N13968	Valve Stem - TR618A (Not Shown)	1
19	N25611	Rim hole plug (Not Shown)	1

Front Hub & Tire
Quad Steer Axle - 9365, 9450 and 9535 - 2021 to Present
Quad Steer Axle - 9445, 9550 and 9650 - 2015 to Present

Serial number break:
9365 Serial # 9365211871 and newer.
9450 Serial # 9450213961 and newer.
9535 Serial # 9535216851 and newer.
9445 Serial # 9445155811 and newer.
9550 Serial # 9550154821 & newer.
9650 Serial # 9650152842 & newer.

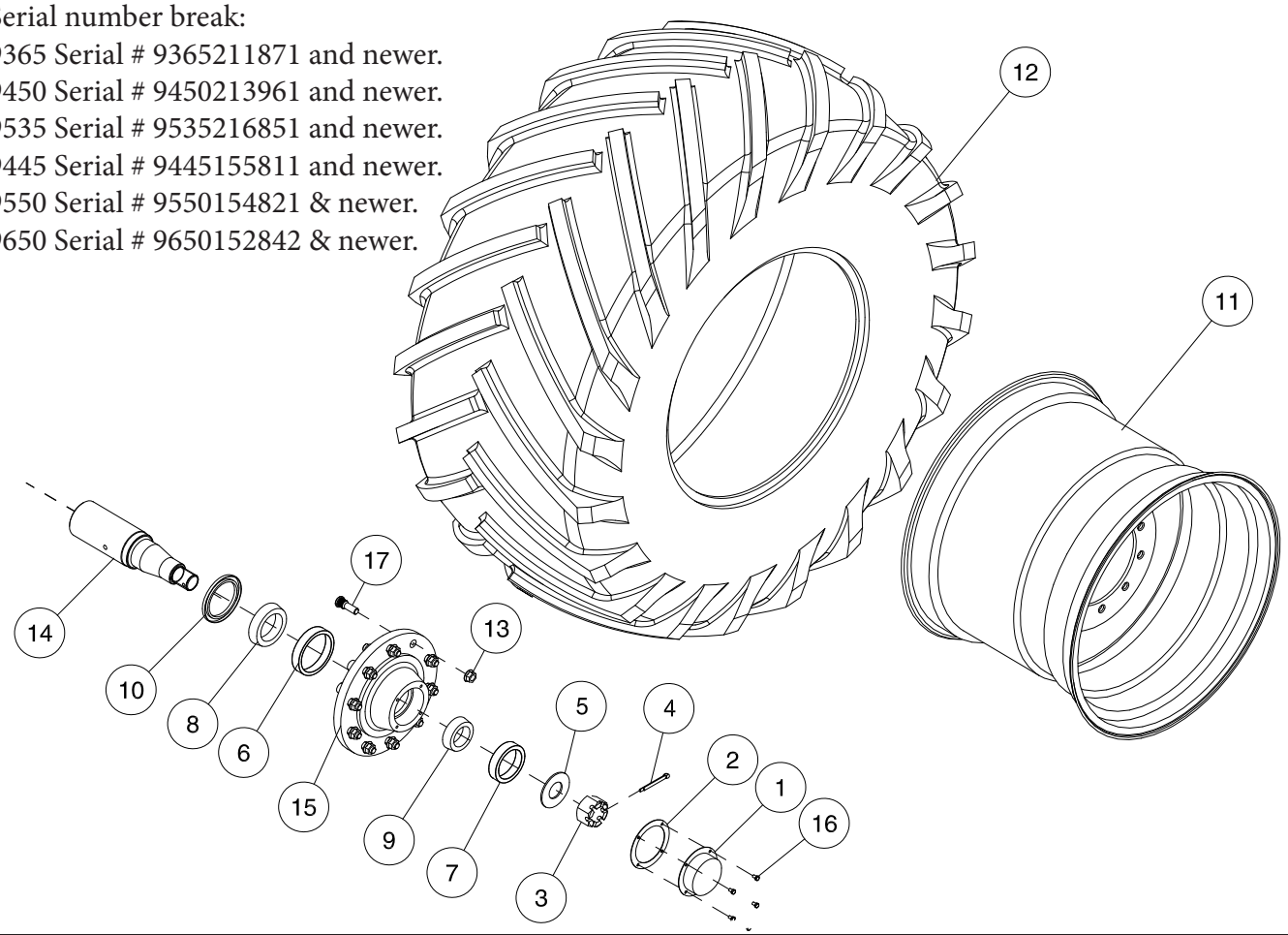

Item	Part No.	Description	Qty
1	N13957	Dust Cap	1
2	N13959	Gasket - #SE-49	1
3	N19484	Hex Slotted Nut - 1 1/4 - 12 UNF	1
4	W-4181	Cotter Pin - 1/4 x 2	1
5	N13962	Flatwasher - 1.281ID x 2 1/2 OD x 1/4 Thick	1
6	N13951	Bearing Cup - #39520	1
7	N13955	Bearing Cone - Outer - #460	1
8	N13954	Bearing Cone - Outer - #39585	1
9	N13952	Bearing Cup - #453A	1
10	N13956	Seal - CR30087 - #SE-48	1
11	N71416	Rim - 26 x DW25 - 8 Bolt - GKN - (N44659 - Rim - 26 x DWH25)	1
12	N71417	Tire - 750/65R26 TL - MITAS SFT - (N44658 - Tire - 28LR26)	1
13	N13958	Flange Wheel Nut - 3/4-16 UNF - Grade 8	8
14	N70815	Spindle - 3 Dia	1
14A	**N55145**	**Spindle - DIGI-STAR**	
15	N53896	Hub - 8 Bolt - 12,000 lbs (Includes Items 6, 9, 17 and 19)	1
16	D-5247	Hex Bolt - 5/16 x 1/2 Lg	4
17	N13953	Press-In Wheel Stud - 3/4-16 UNF x 2 5/8 Lg - Grade 8	8
18	N13968	Valve Stem - TR618A (Not Shown)	1
19	S-752	Grease Fitting (Not Shown)	1
	N53878	Hub & Spindle Assembly	
	N53879	**DIGI-STAR Hub & Spindle Assembly**	

Front Hub & Tire
Quad Steer Axle - 9800 and 91000

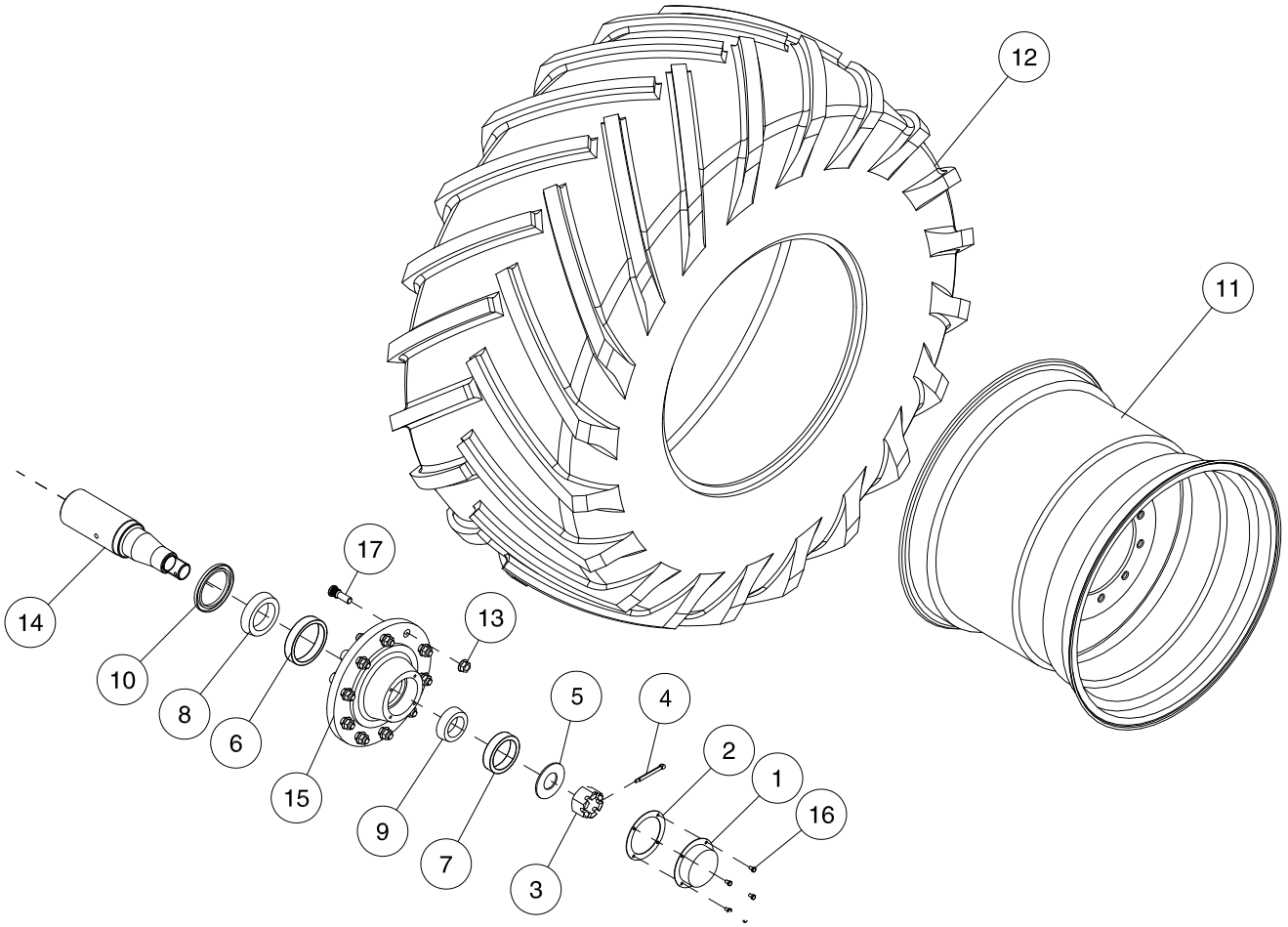

Item	Part No.	Description	Qty
1	N33551	Dust Cap - DC28	1
2	N33554	Gasket - SE59	1
3	N33243	Slotted Hex Nut - 2	1
4	N33244	Cotter Pin - 3/8 x 3 1/2	1
5	N33245	Flatwasher	1
6	N33547	Bearing Cup - HM218210	1
7	N33548	Bearing Cup - HM212010	1
8	N33549	Bearing Cone - Inner - HM218248	1
9	N33550	Bearing Cone - Outer - HM212049	1
10	N33552	Seal - SE55	1
11	N36468	Rim - DW27 x 32	1
	N55244	Rim - DW28 x 38 - Optional - Replaced by N71430	
12	N36233	Tire - 800/65 R32 - L1 135 - Lug	1
	N55053	Tire - 800/70R38 - 173A8 DT830 - Lug - Optional - Replaced by N71474	
13	N13958	Flange Wheel Nut - 3/4 - 16 UNF - Grade 8	10
14	N32871	Spindle - 4 1/2 Dia	1
14A	**N53363**	**Spindle - DIGI-STAR**	
15	**N36140**	**Hub - 10 Bolt - 20,000 lb (Includes Items 6, 7 and 17)**	**1**
16	D-5247	Hex Bolt - 5/16 x 1/2 Lg	4
17	N45120	Press-In Wheel Stud - 3/4-16 UNF x 3 9/32 Lg - Grade 8	10
18	N13968	Valve Stem - TR618A (Not Shown)	1
19	N25611	Rim Hole Plug - 5/8 Brass (Not Shown)	1
	N36138	Hub & Spindle Assembly	
	N55234	**DIGI-STAR Hub & Spindle Assembly**	

Notes

Section 7:
Transmissions - Ground Drive

Section Contents

Meter Drive 7-3
- Mounting Bolts 7-3
- Rate Change Sprockets 7-4
- Spacing Sprockets 7-5
- Standard Drive Coupler 7-6
- 3rd Between Cover Panel Mount 7-7
- Idler Arm 1st & 2nd Tanks 7-8
- Idler Arm 3rd & 4th Tanks 7-9
- Dual Sprocket Idler Assemblys 7-10
- Tow Between 9445, 9550 & 9650 Idlers 4th & 3rd Transmissions 7-12
- Secondary Clutch 7-14

Meter Drive Chains 7-15
- 9365, 9450 and 9535 7-15
- 9445, 9550 and 9650 - Tow Behind - Prior to 2016 7-17
- 9445, 9550 and 9650 - Tow Between - Prior to 2016 7-20
- 9445, 9550 and 9650 - 2016 to Present 7-24
- 9800 and 91000 7-28

Calibration Manual 7-34
- Calibration Crank Assembly 7-34
- Crank Holder 7-35

Calibration Hydraulic - Optional 7-36
- Transmission 9365, 9450 & 9535 7-36
- Transmission 9445, 9550, 9650, 9800 & 91000 - Optional 7-38

Jack Shaft 7-40
- 9365, 9450, 9535 7-40
- 9445, 9550, 9650 - Tow Behind - Prior to 2016 7-42
- 9445, 9550 & 9650 - Tow Between - Proir to 2016 7-44
- 9445, 9550 & 9650 - Tow Between and Tow Behind - Duals 7-46
- 9800 - Tow Between and Tow Behind - Forward Axle Location 7-46

Section Contents

9445, 9550 & 9650 - Tow Behind - Single 900 Tire 7-48
9800 and 91000 - Rear Axle Location 7-48
9800 and 91000 - Rear Axle Location 7-49
Transmission 7-50
Small Frame Standard Drive 7-50
Small Frame Standard Drive Rear 7-52
Large Frame Standard Drive 7-54
Large Frame Behind Standard Drive Rear 7-56
Large Frame Between Standard Drive Rear 7-58
Standard Drive Rear - 9800 and 91000 7-60
Transmission Cover - Tow Behind 9445, 9550 & 9650 Narrow Transport 7-62

Meter Drive
Mounting Bolts

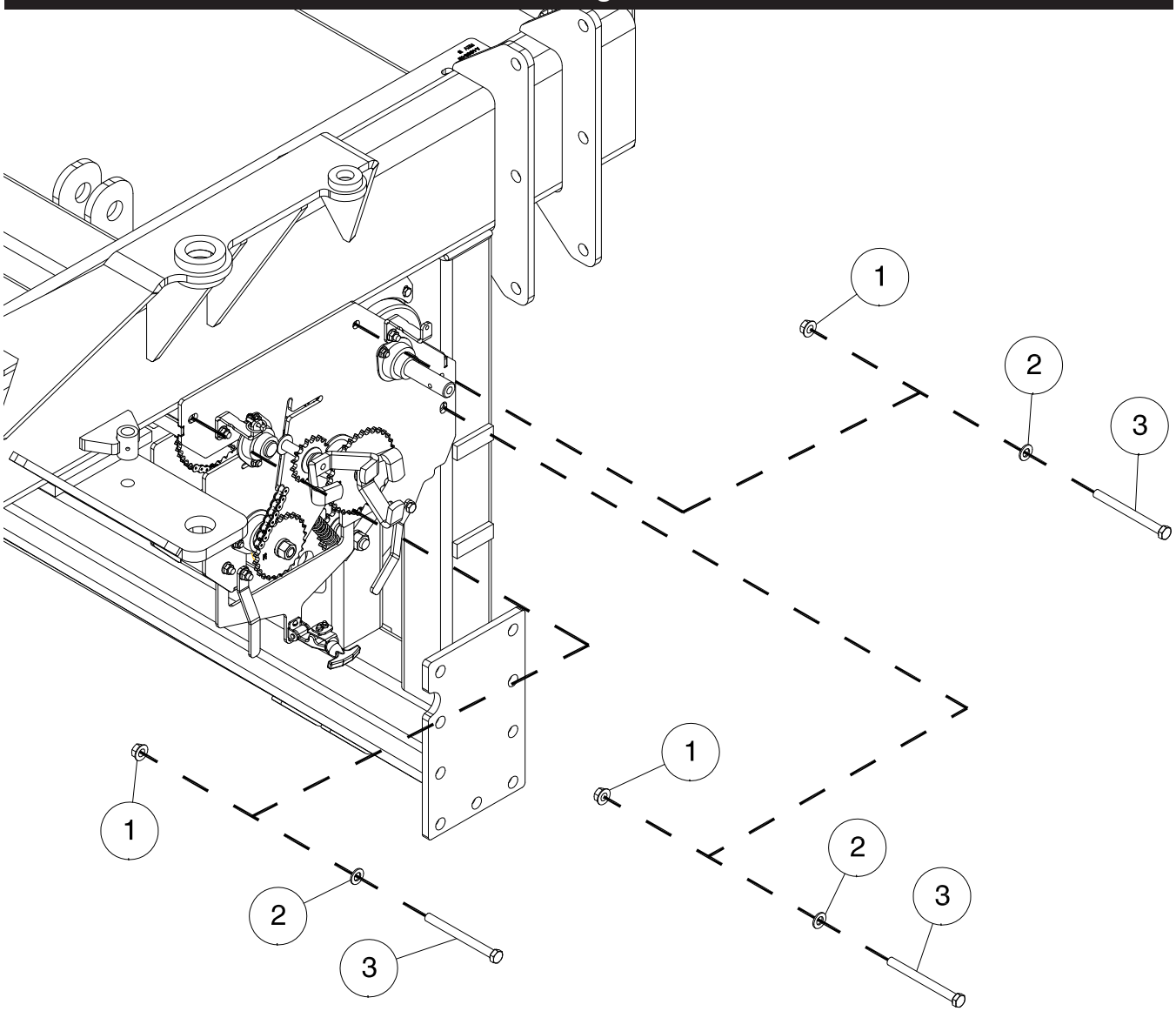

Item	Part No.	Description	Qty
1	D14565	Lock Nut - 1/2 Flanged	3
2	S-1925	FLat Washer - 1/2	3
3	W-496	Hex Bolt - 1/2 x 5 1/2 Lg	3

Meter Drive
Rate Change Sprockets

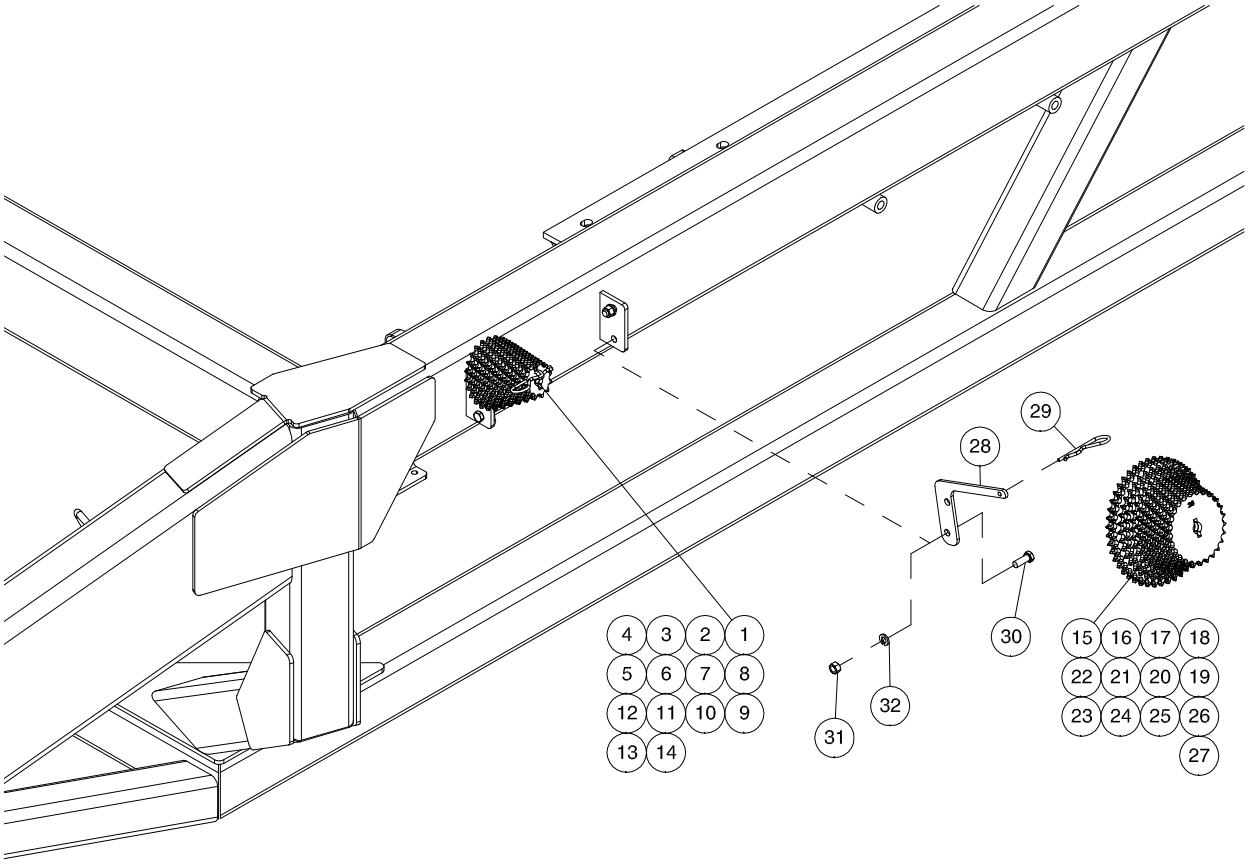

Item	Part No.	Description	Qty
1	N27412	Sprocket - 40A12 - (P-Drive)	1
2	N27413	Sprocket - 40A13 - (P-Drive)	1
3	N27414	Sprocket - 40A14 - (P-Drive)	1
4	N27415	Sprocket - 40A15 - (P-Drive)	1
5	N27416	Sprocket - 40A16 - (P-Drive)	1
6	N27417	Sprocket - 40A17 - (P-Drive)	1
7	N27418	Sprocket - 40A18 - (P-Drive)	1
8	N27419	Sprocket - 40A19 - (P-Drive)	1
9	N27420	Sprocket - 40A20 - (P-Drive)	1
10	N27421	Sprocket - 40A21 - (P-Drive)	1
11	N27422	Sprocket - 40A22 - (P-Drive)	1
12	N27423	Sprocket - 40A23 - (P-Drive)	1
13	N27424	Sprocket - 40A24 - (P-Drive)	1
14	N27425	Sprocket - 40A25 - (P-Drive)	1
15	N27426	Sprocket - 40A26 - (P-Drive)	1
16	N27427	Sprocket - 40A27 - (P-Drive)	1
17	N27428	Sprocket - 40A28 - (P-Drive)	1
18	N27429	Sprocket - 40A29 - (P-Drive)	1
19	N27430	Sprocket - 40A30 - (P-Drive)	1
20	N27431	Sprocket - 40A31 - (P-Drive)	1
21	N27432	Sprocket - 40A32 - (P-Drive)	1
22	N27433	Sprocket - 40A33 - (P-Drive)	1
23	N27435	Sprocket - 40A35 - (P-Drive)	1
24	N27438	Sprocket - 40A38 - (P-Drive)	1
25	N27440	Sprocket - 40A40 - (P-Drive)	1
26	N27444	Sprocket - 40A44 - (P-Drive)	1
27	N27445	Sprocket - 40A45 - (P-Drive)	1
28	N50654	Sprocket Mount	2
29	W-131	Hairpin - 5/32	2
30	W-475	Hex Bolt - 3/8 x 1 Lg	4
31	W-514	Hex Nut - 3/8	4
32	W-523	Lockwasher - 3/8	4

Meter Drive
Spacing Sprockets

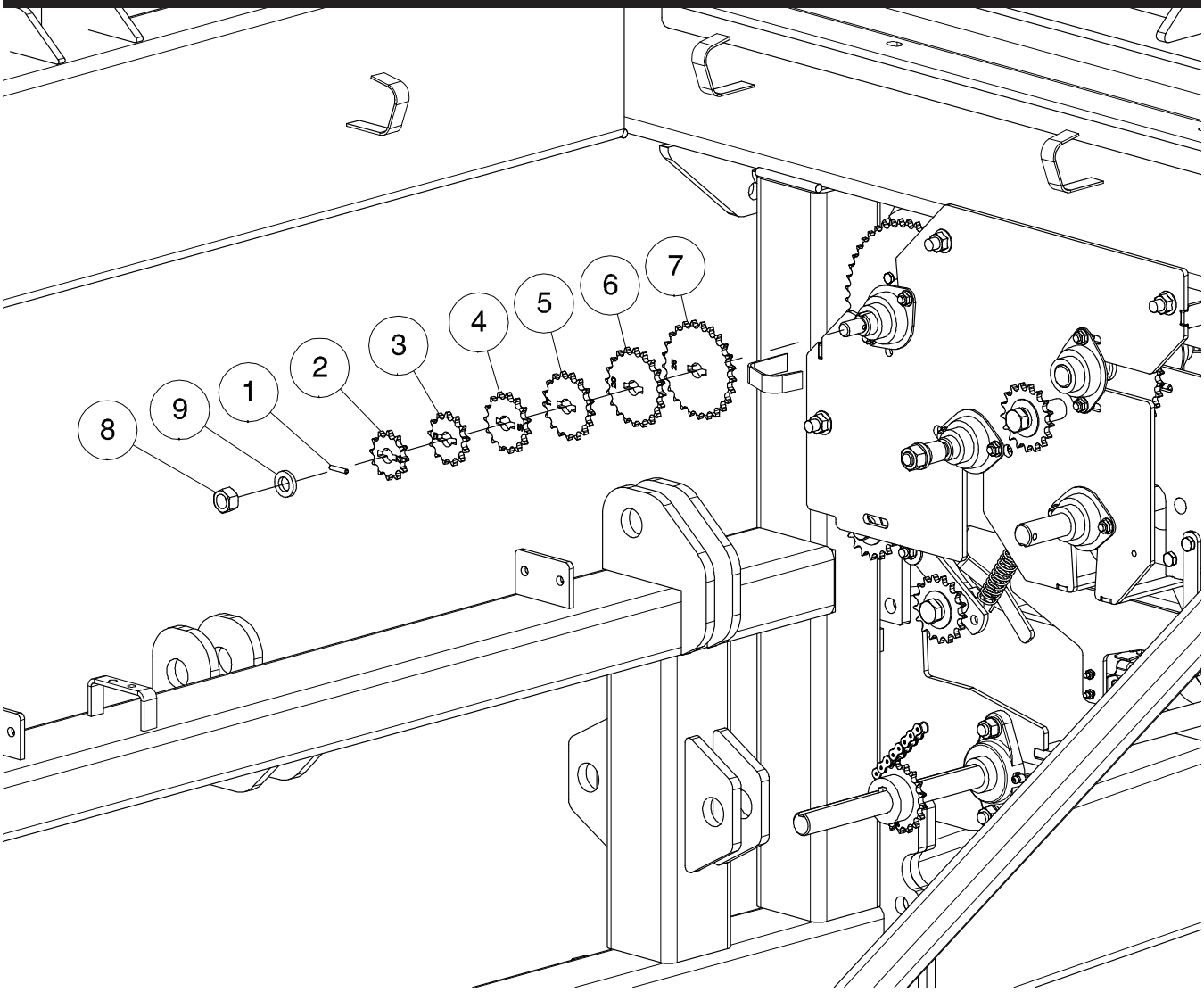

Item	Part No.	Description	Qty
1	N27395	Drive Pin -3/16 x 1 Lg	3
2	N27412	Sprocket - 40A12 - (P-Drive) - 7 1/2 opener spacing	1
3	N27413	Sprocket - 40A13 - (P-Drive) - 8 opener spacing	1
4	N27415	Sprocket - 40A15 - (P-Drive) - 9 opener spacing	1
5	N27417	Sprocket - 40A17 - (P-Drive) - 10 opener spacing	1
6	N27420	Sprocket - 40A20 - (P-Drive) - 12 opener spacing	1
7	N27425	Sprocket - 40A25 - (P-Drive) - 15 opener spacing	1
8	W-517	Hex Nut - 5/8	6
9	W-793	Washer - 5/8	3

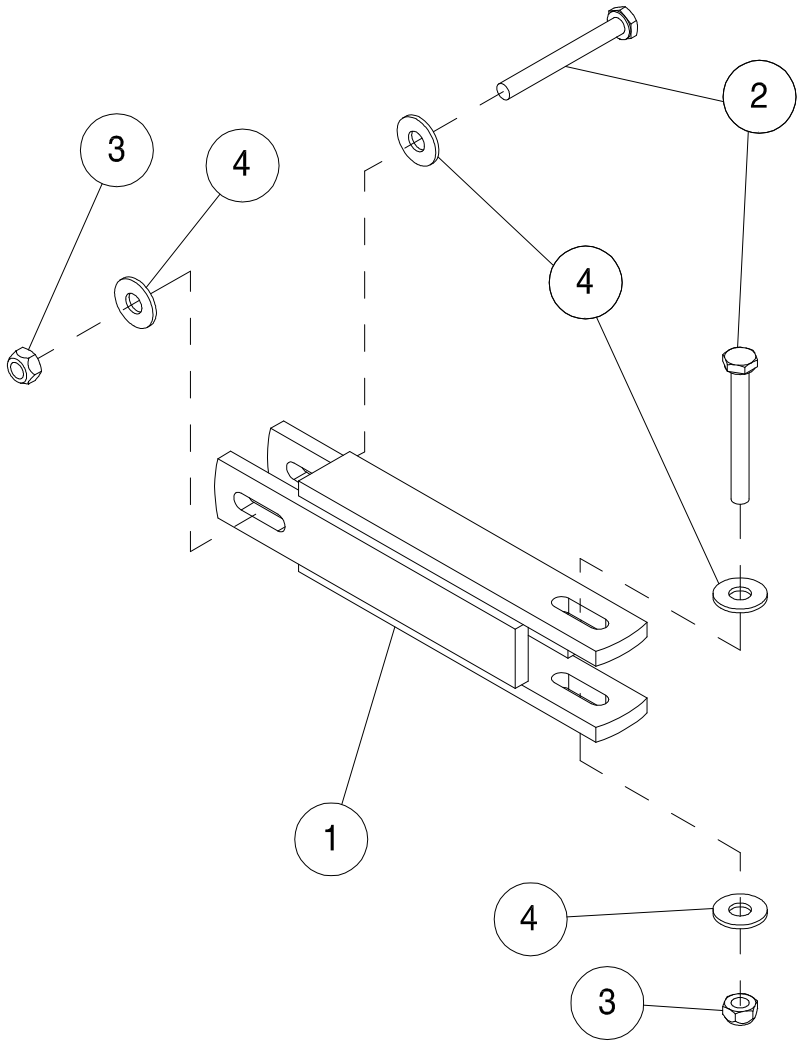

Item	Part No.	Description	Qty
1	N42535	Coupler - 7 13/16 Lg (9365, 9450, 9535)	1
	N44591	Coupler - 9 7/8 Lg (9445, 9550, 9650) (9800 and 91000- 10 Wide)	1
	N55491	Coupler - 11 3/4 Lg (9800 - 9 Wide)	1
2	N22777	Hex Bolt - 1/4 x 2 1/4 Lg x 3/8 Thread Lg - Gr 8	2
3	N22778	Locknut - 1/4 Nylon Insert	2
4	S-1198	Washer - 5/16 ID x 3/4 OD x .065	4

Meter Drive
3rd Between Cover Panel Mount

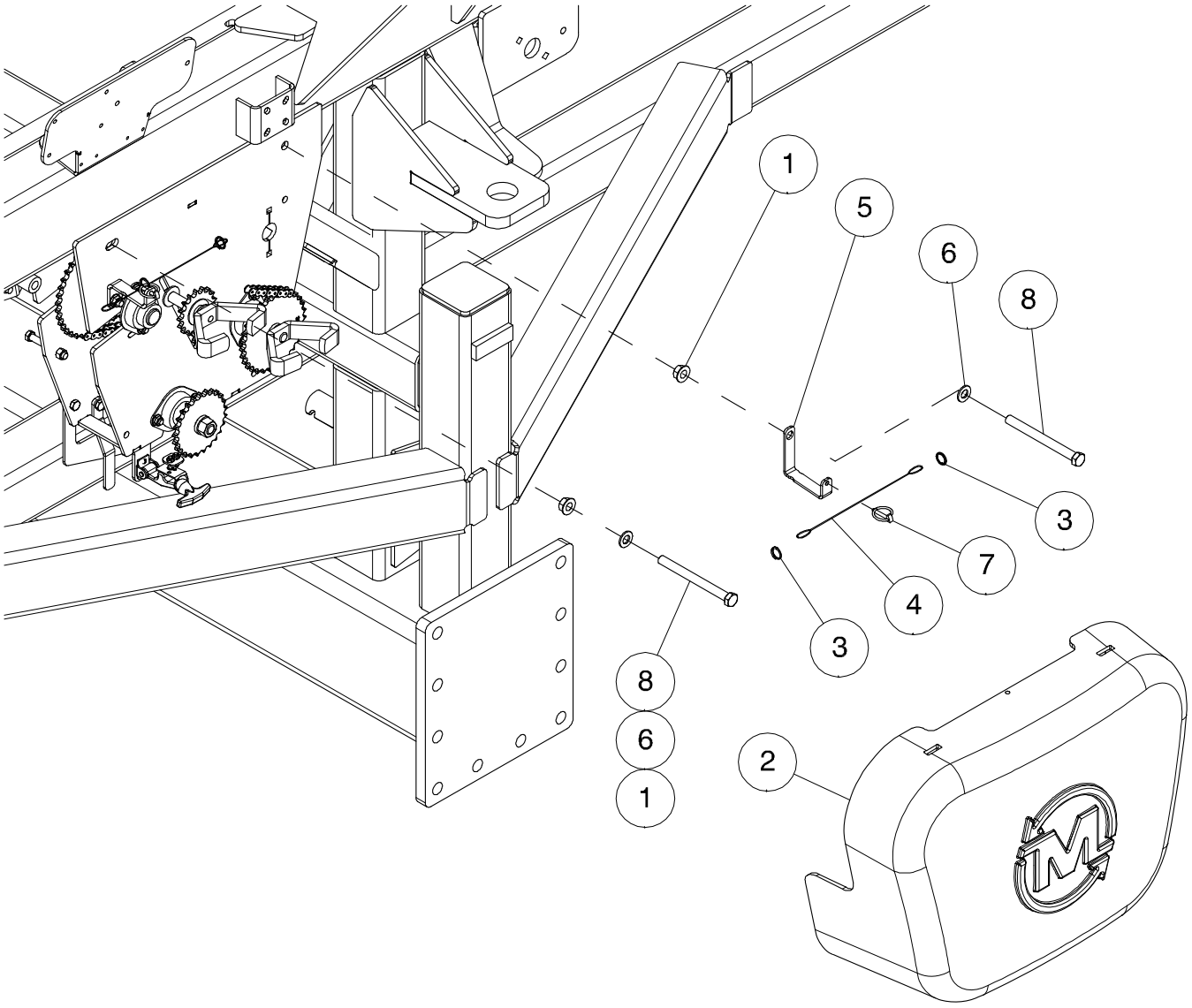

Item	Part No.	Description	Qty
1	D14565	Flange Lock Nut - 1/2 Serrated	2
2	N50932	Chain Guard (Prior to 2017)	1
	N50932	Chain Guard (2017 to Present)	1
3	N51996	Key Ring - 9/16 Dia	2
4	N51998	Wire Rope Lanyard - 3/64 Dia	1
5	N53332	Upper Bracket - 650 Between 3rd Transmission	1
6	S-1925	Washer - 17/32 ID x 1 OD x 13 Ga	2
7	S42294	Lynch Pin - 3/16 DIA x 1 1/4 Lg	1
8	W-496	Hex Bolt - 1/2 x 5 1/2 Lg	2

Meter Drive
Idler Arm 1st & 2nd Tanks

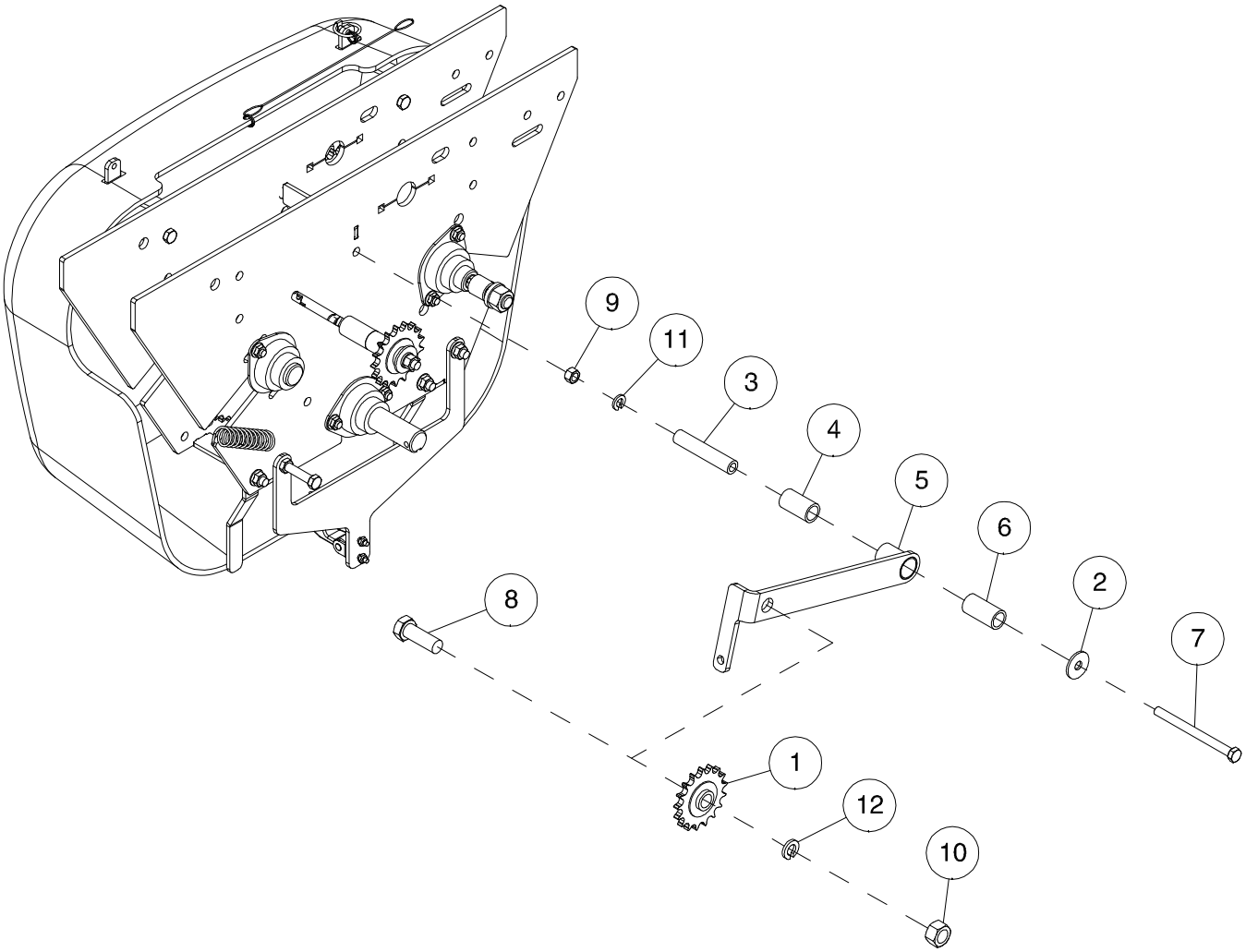

Item	Part No.	Description	Qty
1	D17808	Sprocket Idler - 40A17 - W/5/8 Bore	1
2	N19706	Washer-13/32ID x 1-1/4OD x.100	1
3	N50842	Bushing - 5/8 OD x .385 ID	1
4	N50843	Bushing - 7/8 OD x .657 ID x 1 9/16 Lg	1
5	N50847	Tensioner	1
6	N51997	Bushing - 7/8 OD x .657 ID x 1 3/4 Lg	1
7	S-1299	Hex Bolt - 3/8 x 4 1/2 Lg	1
8	W-498	Hex Bolt - 5/8 x 1-3/4 Lg	1
9	W-514	Hex Nut - 3/8	1
10	W-517	Hex Nut - 5/8	1
11	W-523	Lockwasher - 3/8	1
12	W-525	Lockwasher - 1/2	1

Meter Drive
Idler Arm 3rd & 4th Tanks

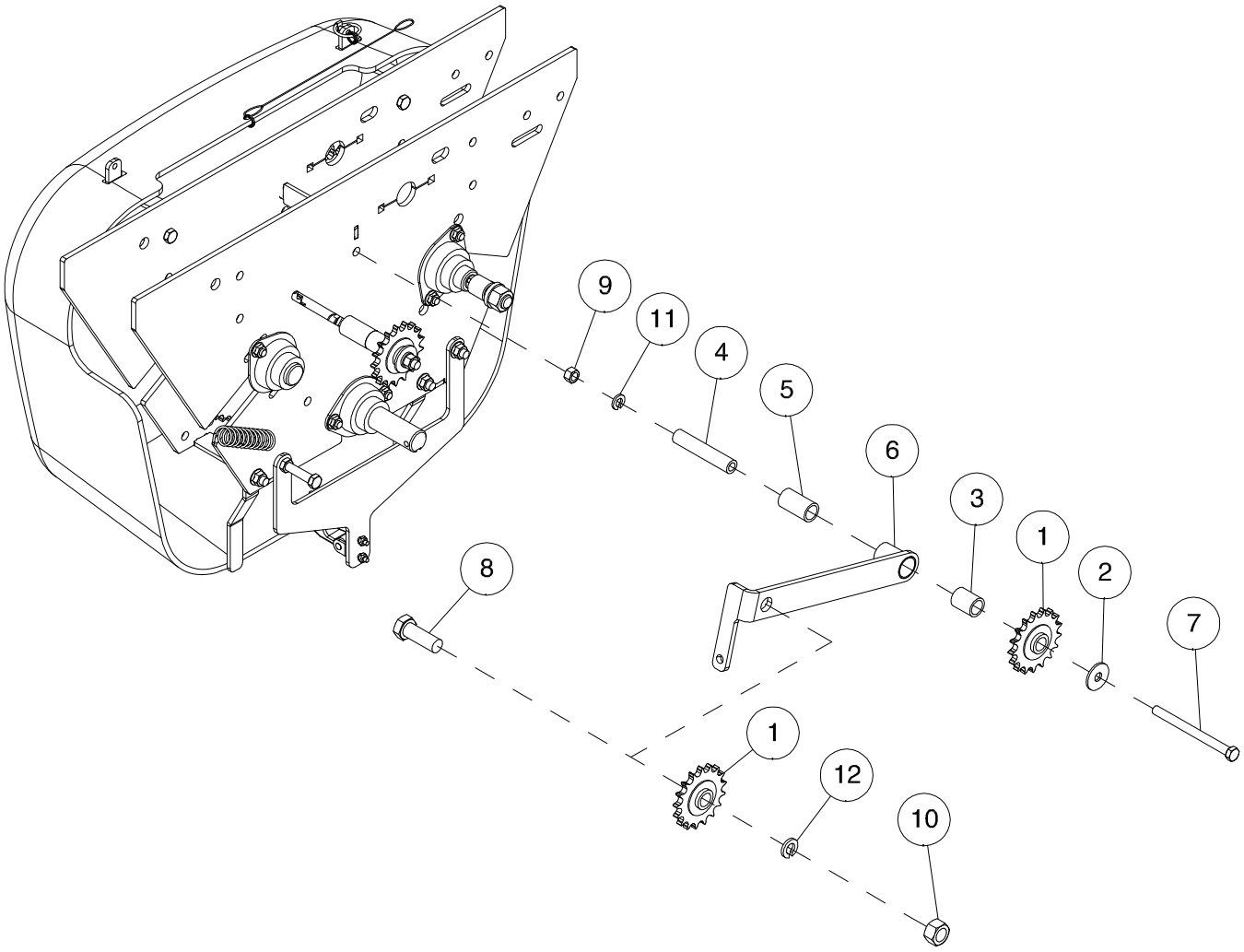

Item	Part No.	Description	Qty
1	D17808	Sprocket Idler - 40A17 - W/5/8 Bore	2
2	N19706	Washer - 13/32ID x 1 1/4OD x .100 Thick	1
3	N29200	Bushing - 7/8 OD x .657 ID x 1 1/8 Lg	1
4	N50842	Bushing - 5/8 OD x .385 ID x 3 1/4 Lg	1
5	N50843	Bushing - 7/8 OD x .657 ID x 1 9/16 Lg	1
6	N50847	Tensioner	1
7	S-1299	Hex Bolt - 3/8 x 4 1/2 Lg.	1
8	W-498	Hex Bolt - 5/8 x 1 3/4 Lg.	1
9	W-514	Hex Nut - 3/8	1
10	W-517	Hex Nut - 5/8	1
11	W-523	Lockwasher - 3/8	1
12	W-525	Lockwasher - 1/2	1

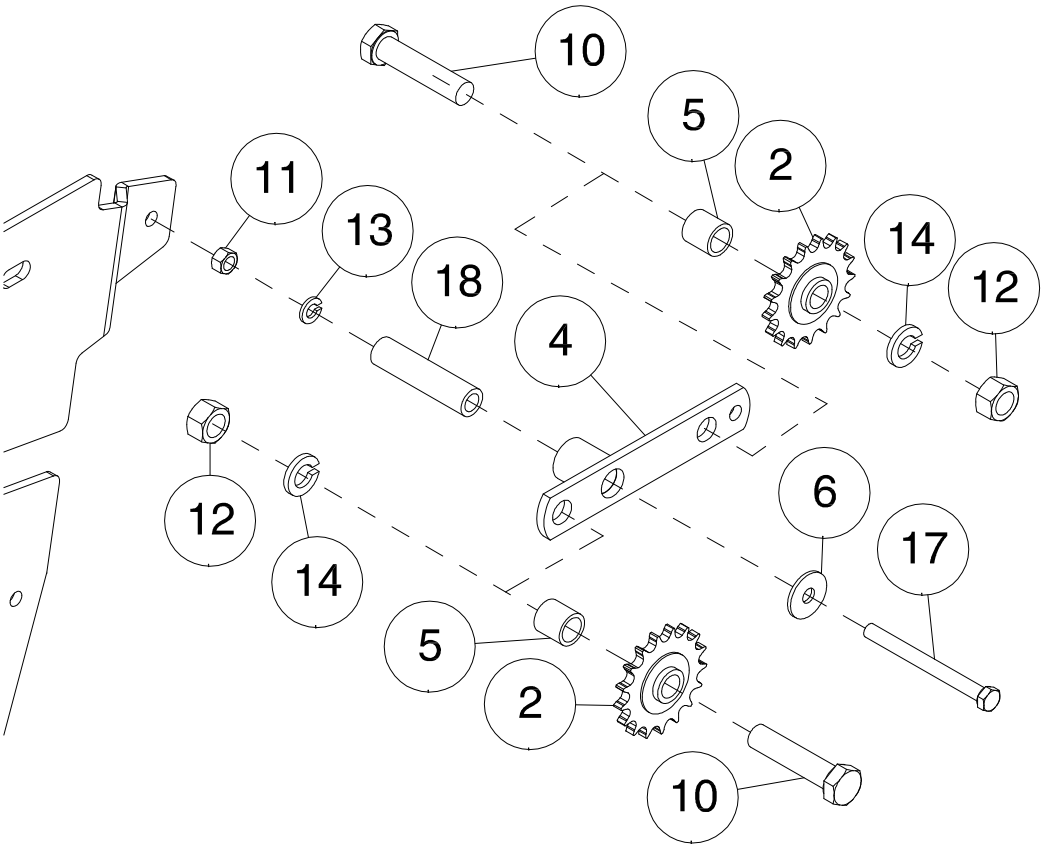
10
5
2
11
13
18
14
12
4
12
14
6
17
5
2
10

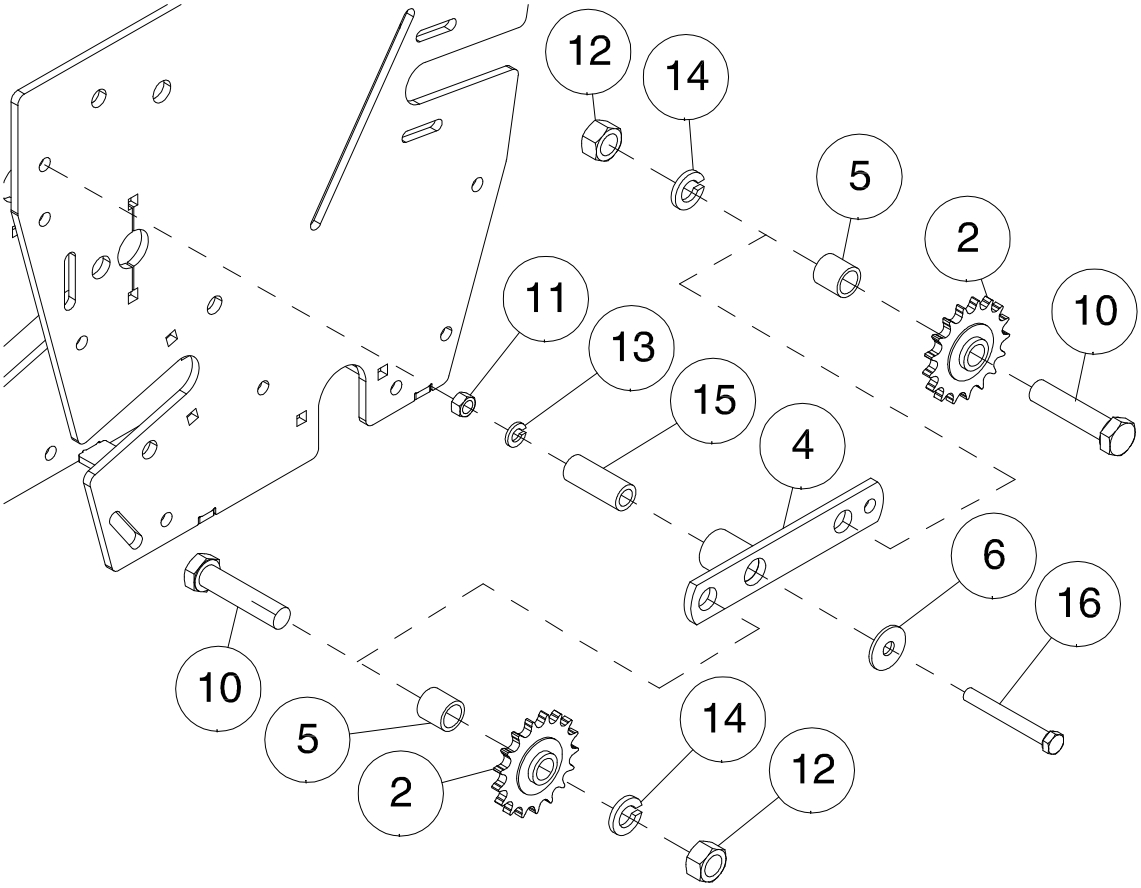
12
14
5
2
11
13
15
4
10
6
16
10
5
2
14
12

Meter Drive
Dual Sprocket Idler Assemblys

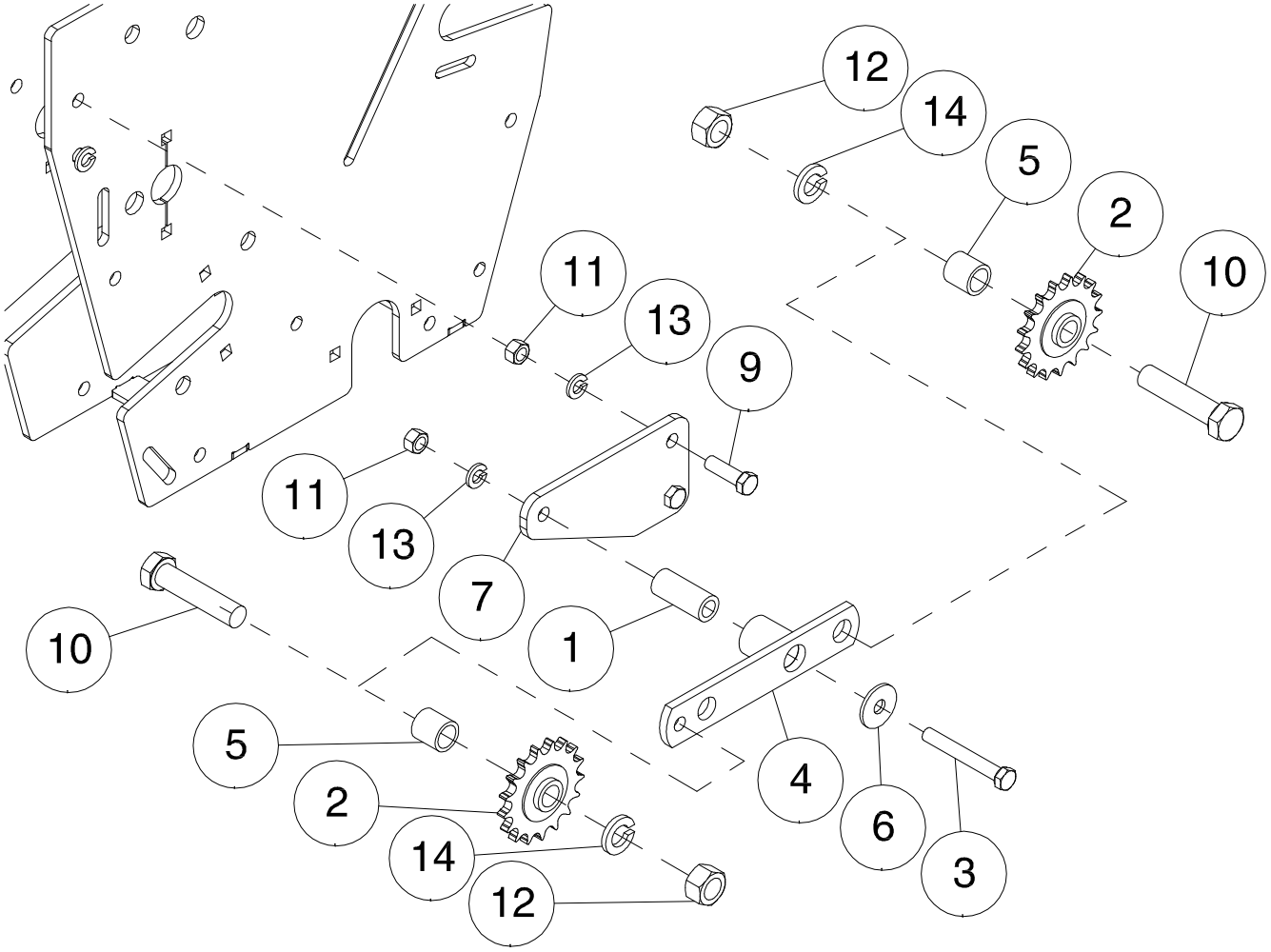

Item	Part No.	Description	Qty
1	D-4820	Bushing - .482 ID x 3/4 OD x 1 3/4 Lg	1
2	D17808	Idler - 40A17 w/ 5/8 Bore	2
3	H-1790	Hex Bolt - 3/8 x 2 3/4 Lg.	1
4	N19288	Idler Arm	1
5	N19577	Bushing - 7/8 OD x .657 ID x 7/8 Lg	2
6	N19706	Washer - 13/32 ID x 1 1/4 OD x .100	1
7	N45086	Plate - Idler Mount	1
9	W-187	Hex Bolt - 3/8 x 1 1/4 Lg.	2
10	W-502	Hex Bolt - 5/8 x 2 3/4 Lg.	2
11	W-514	Hex Nut - 3/8	3
12	W-517	Hex Nut - 5/8	2
13	W-523	Lockwasher - 3/8	3
14	W-526	Lockwasher - 5/8	2
15	N31066	Spacer - 3/4 OD x .482 ID x 1 15/16 Lg	1
16	W-1854	Hex Bolt - 3/8 x 3 Lg.	1
17	C-1550	Hex Bolt - 3/8 x 4 Lg.	1
18	N29399	Bushing - 3/4 OD x .482 ID x 3 1/8 Lg	1

Meter Drive
Tow Between 9445, 9550 & 9650 Idlers 4th & 3rd Transmissions

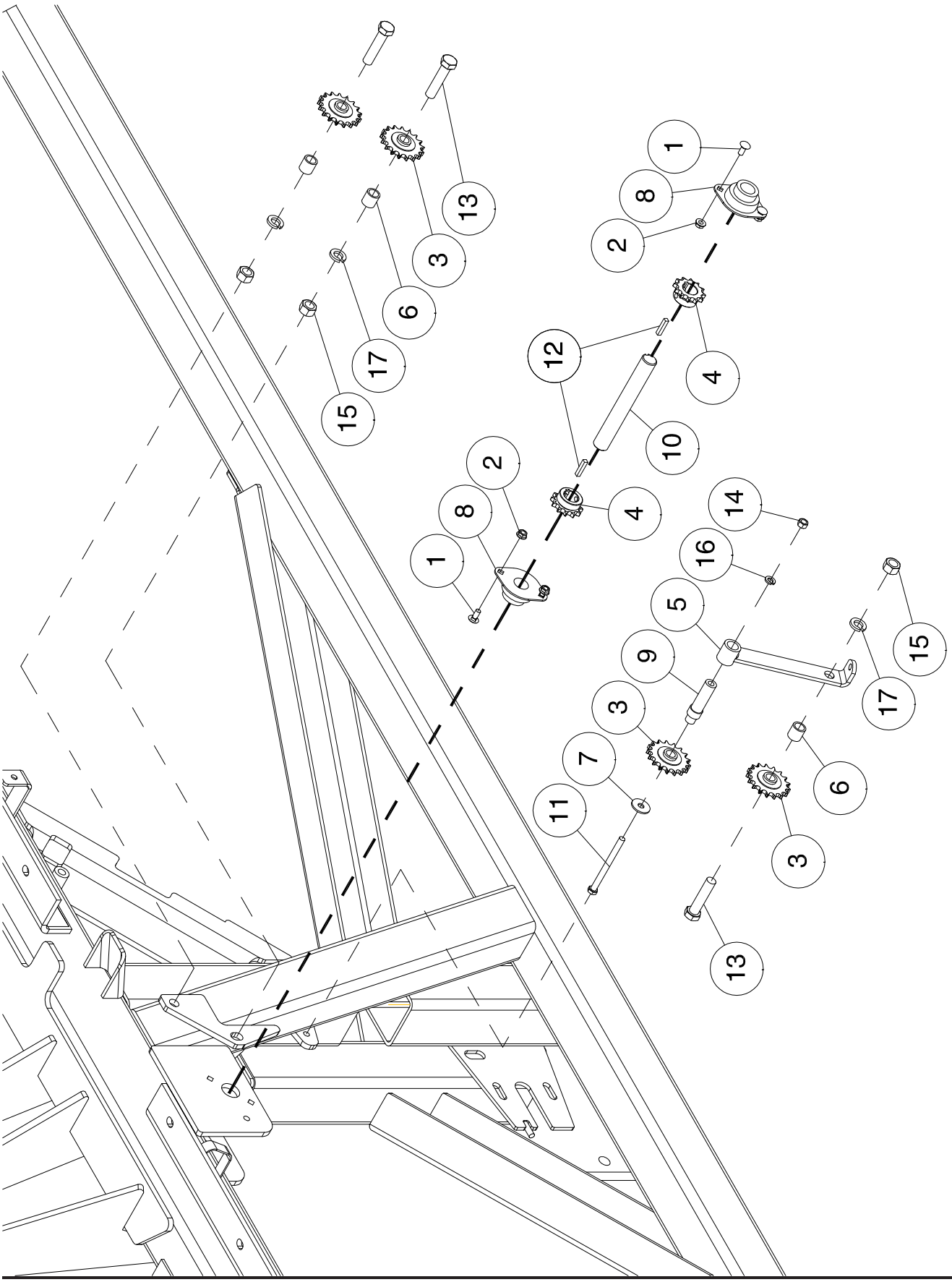

Meter Drive - Tow Between 9445, 9550 & 9650 Idlers 4th & 3rd Transmissions

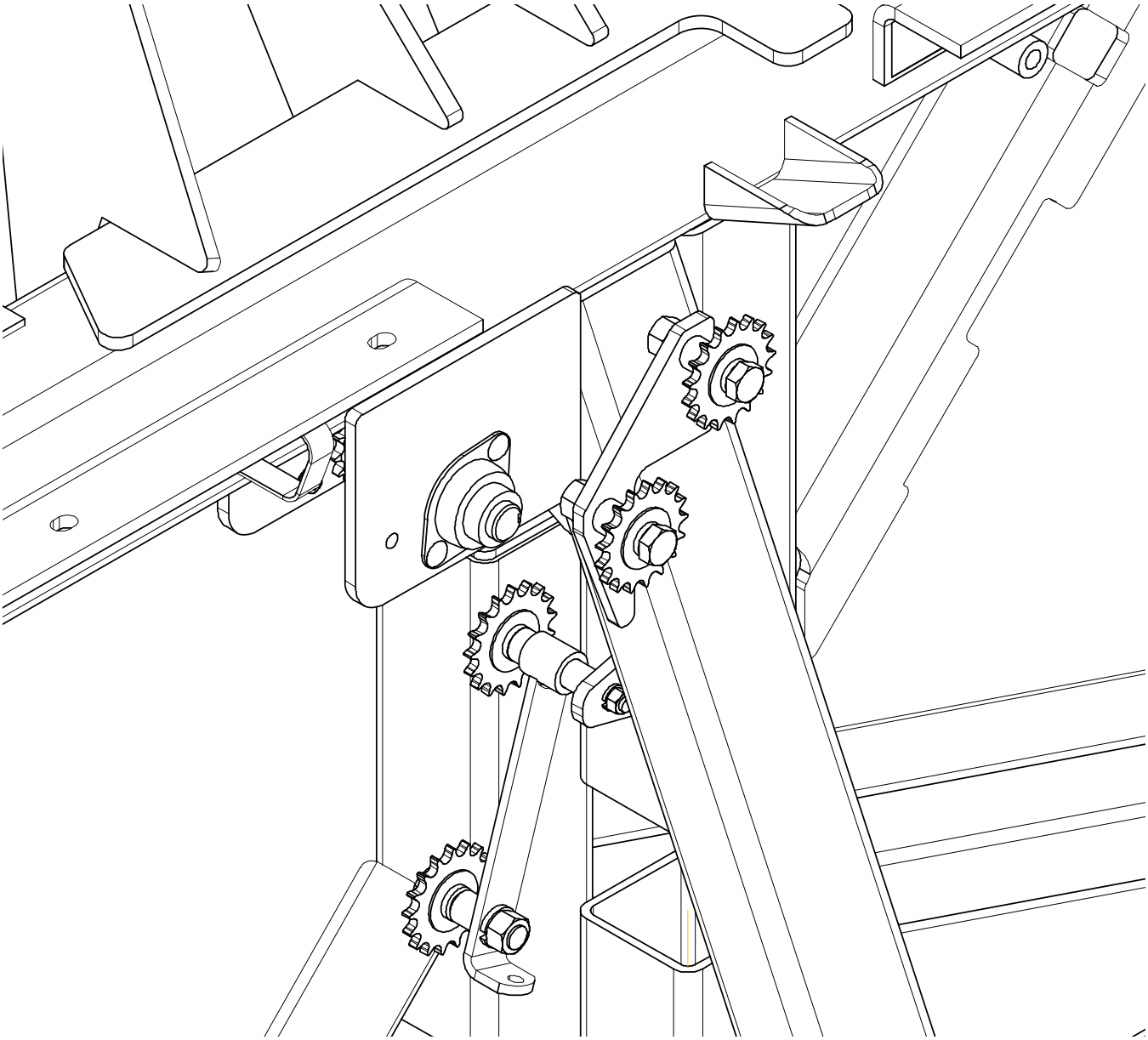

Item	Part No.	Description	Qty
1	D-5259	Carriage Bolt - 5/16 x 3/4 Lg	4
2	D-5278	Lock Nut - 5/16 Serrated Flanged	4
3	D17808	Sprocket Idler - 40A17 - W/5/8 Bore	4
4	D17946	Sprocket - 40B12	2
5	N19261	Idler Arm	1
6	N19577	Bushing - 7/8 OD x .657 ID x 7/8 Lg	3
7	N19706	Washer - 13/32 ID x 1 1/4 OD x .100 Thick	1
8	N53889	Flangette Bearing - 1” Bore	2
9	N44589	Bushing - 7/8 OD x .406 ID x 3 21/64 Lg	1
10	N49658	Shaft-Slow Speed - 7 3/4 Lg	1
11	S-1299	Hex Bolt - 3/8 x 4 1/2 Lg	1
12	S10730	Keyway - 1/4 x 1/4 x 1 1/4 Lg	2
13	W-502	Hex Bolt - 5/8 x 2 3/4 Lg	3
14	W-514	Hex Nut - 3/8	5
15	W-517	Hex Nut - 5/8	3
16	W-523	Lockwasher - 3/8	5
17	W-526	Lockwasher - 5/8	3

Meter Drive
Secondary Clutch

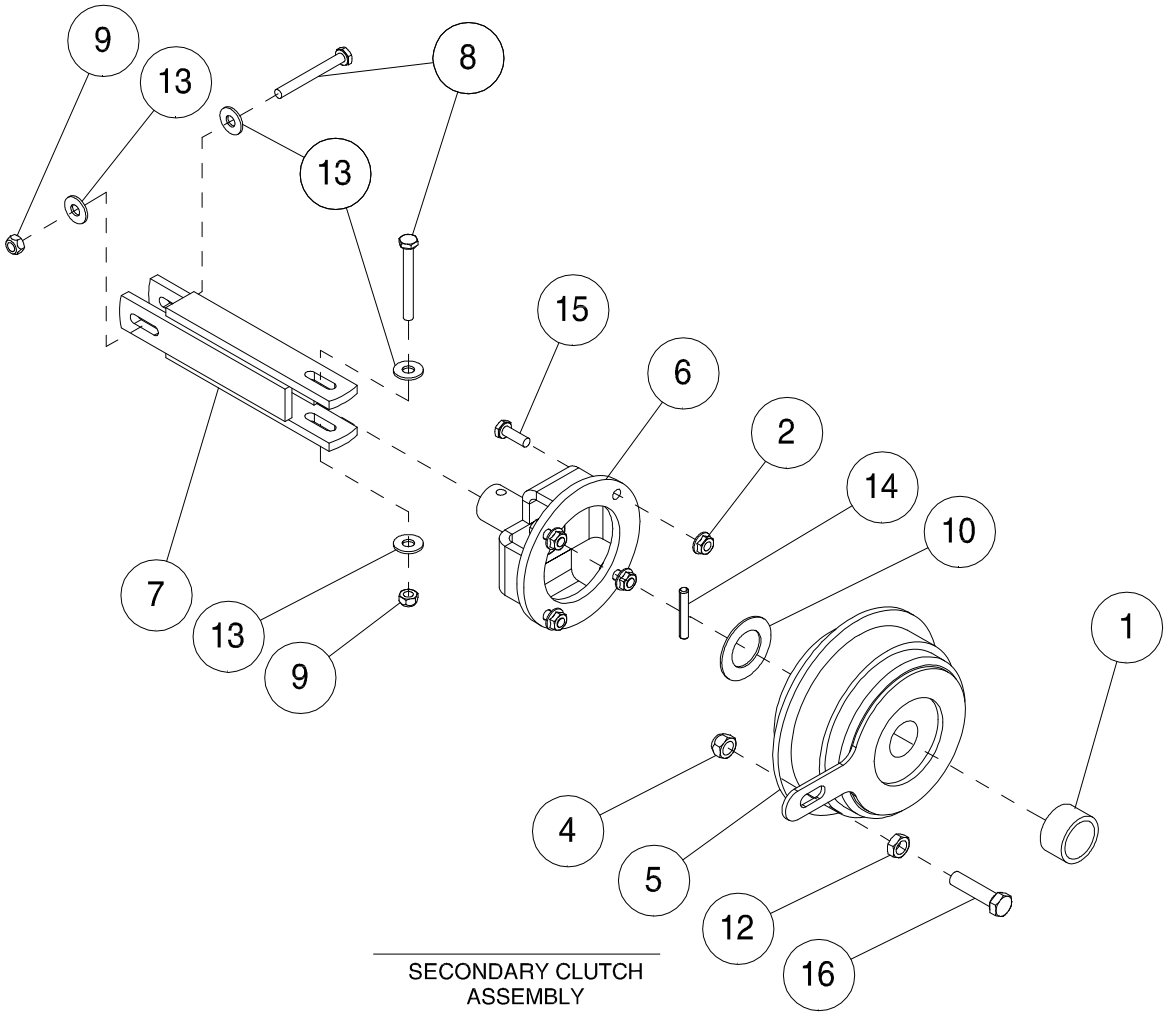

SECONDARY CLUTCH
ASSEMBLY

Item	Part No.	Description	Qty
1	C21667	Spacer	1
2	D-5277	Flange Lock Nut - 1/4 Serrated	4
3	D17808	Sprocket Idler- 40A17	1
4	M-3388	Locknut - 3/8 Unitorque	1
5	N16862	Electric Clutch	1
6	N19470	Clucth Coupler	1
7	N21287	Coupler - 5 5/8 Lg (9365, 9450, 9535)	1
	N42535	Coupler - 7 13/16 Lg (9445, 9550, 9650) (9800 and 91000- 10 Wide)	1
	N44591	Coupler - 9 7/8 Lg (9800 - 9 Wide)	1
8	N22777	Hex Bolt - 1/4 x 2 1/4 Lg x 3/8 Thread Lg - Gr 8	2
9	N22778	Locknut - 1/4 Nylon Insert	2
10	N31040	Washer - 1-1/32 ID x 1-3/4 OD x 16 Ga	1
11	N44676	Bushing - 1 OD x .640 ID x 3/8 Lg	1
12	S-748	Hex Jam Nut - 3/8	1
13	S-1198	Washer - 5/16 ID x 3/4 OD x .065	4
14	S-4781	Spring Pin - 1/4 x 1 1/2	1
15	W-469	Hex Head - 1/4 x 3/4 Lg	4
16	W-477	Hex Bolt - 3/8 x 1 1/2 Lg	1
17	W-499	Hex Bolt - 5/8 x 2 Lg	1
18	W-517	Hex Nut - 5/8	1
19	W-526	Lockwasher - 5/8	1

9365

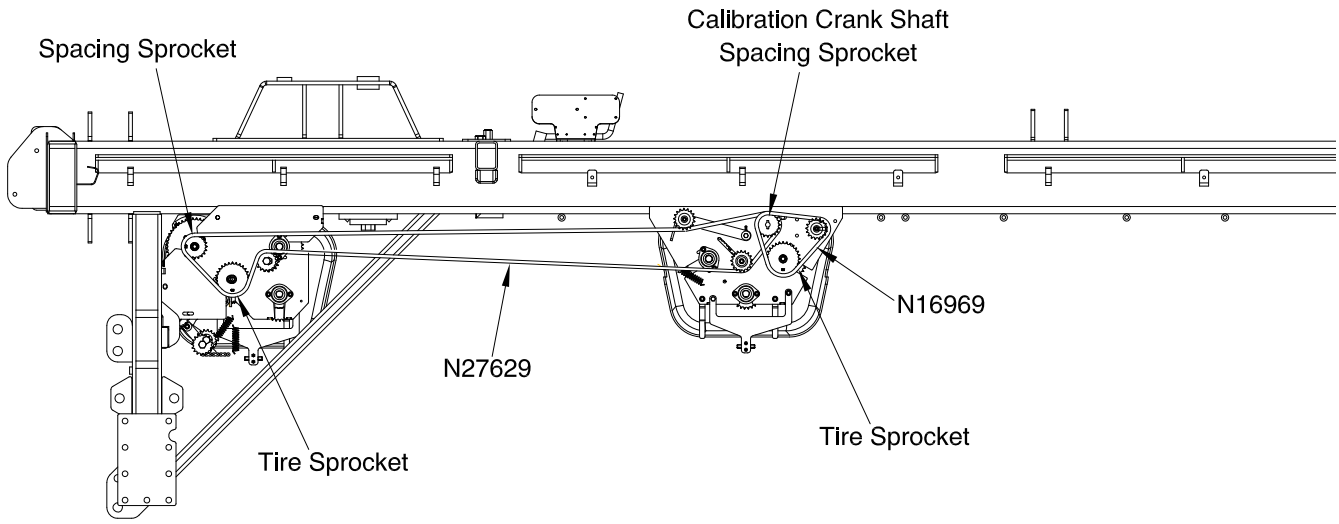
Spacing Sprocket
Calibration Crank Shaft
Spacing Sprocket
N16969
N27629
Tire Sprocket
Tire Sprocket

9450

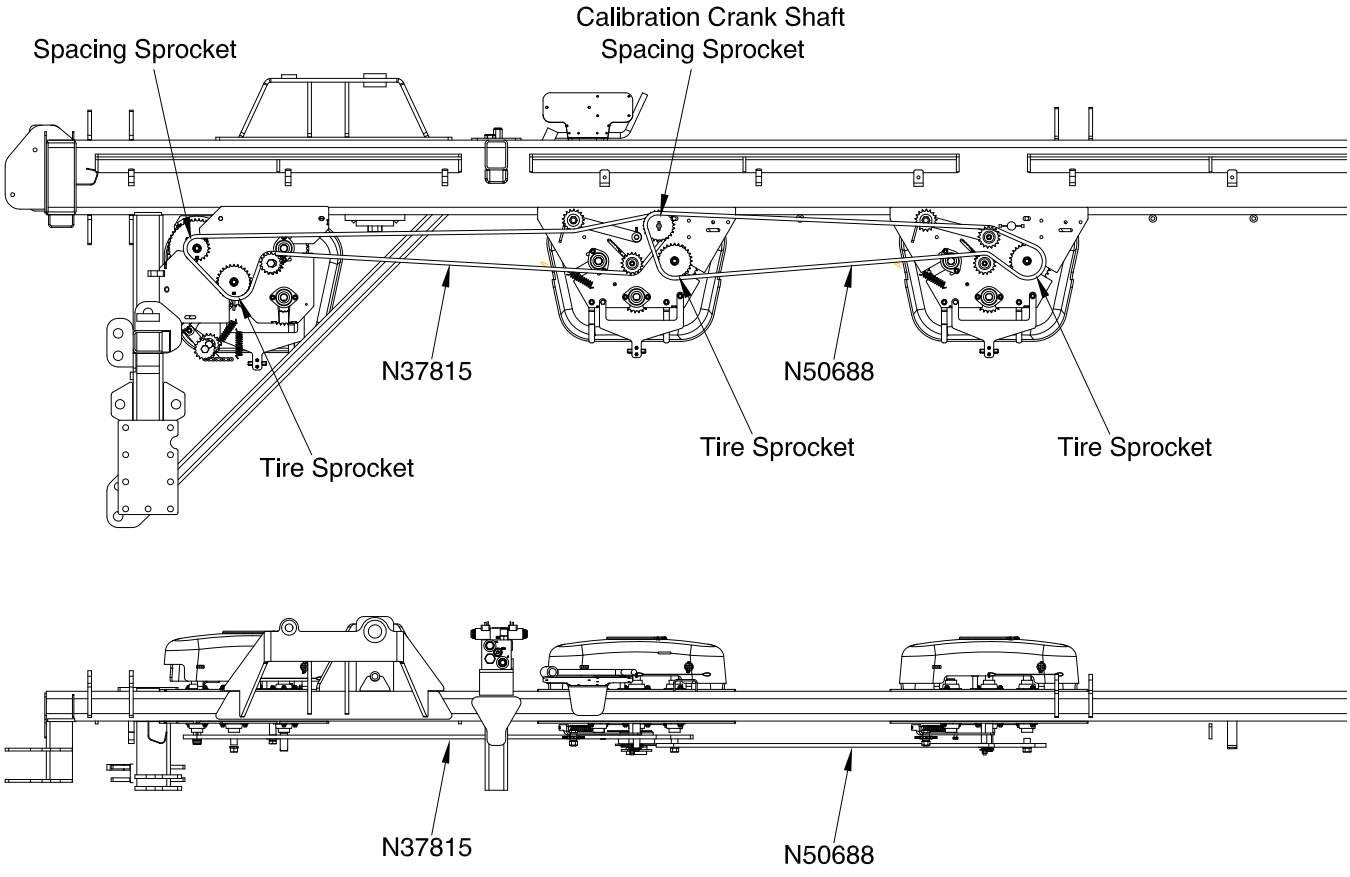
Spacing Sprocket
Calibration Crank Shaft
Spacing Sprocket
N37815
N50688
Tire Sprocket
Tire Sprocket
Tire Sprocket
N37815
N50688

9535

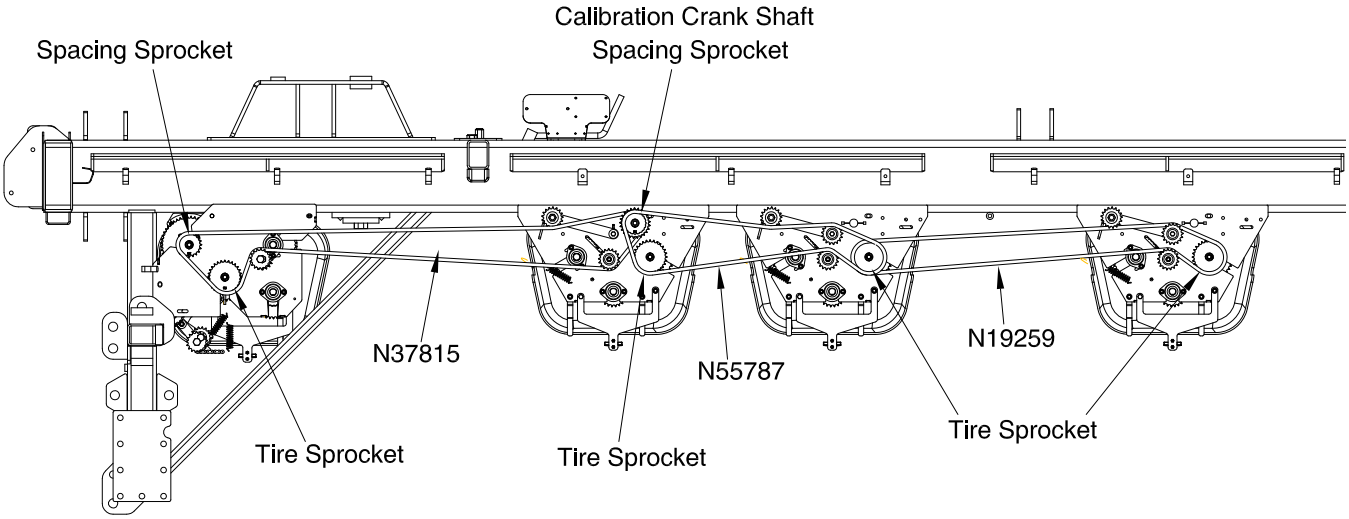

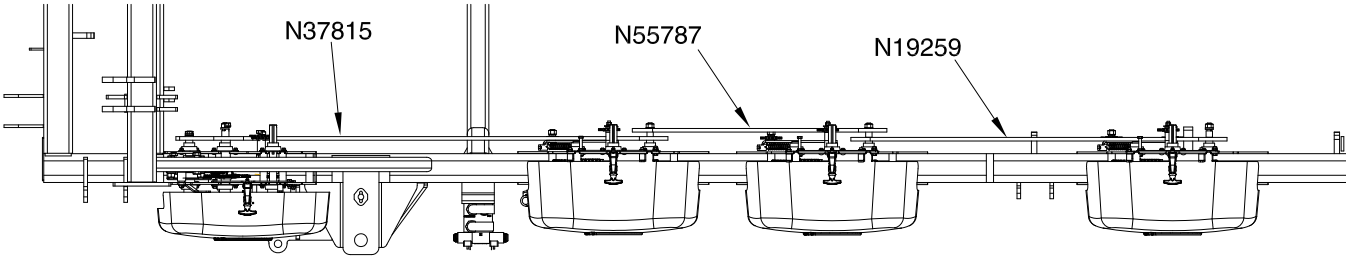

Small Frame - Clutch Drive

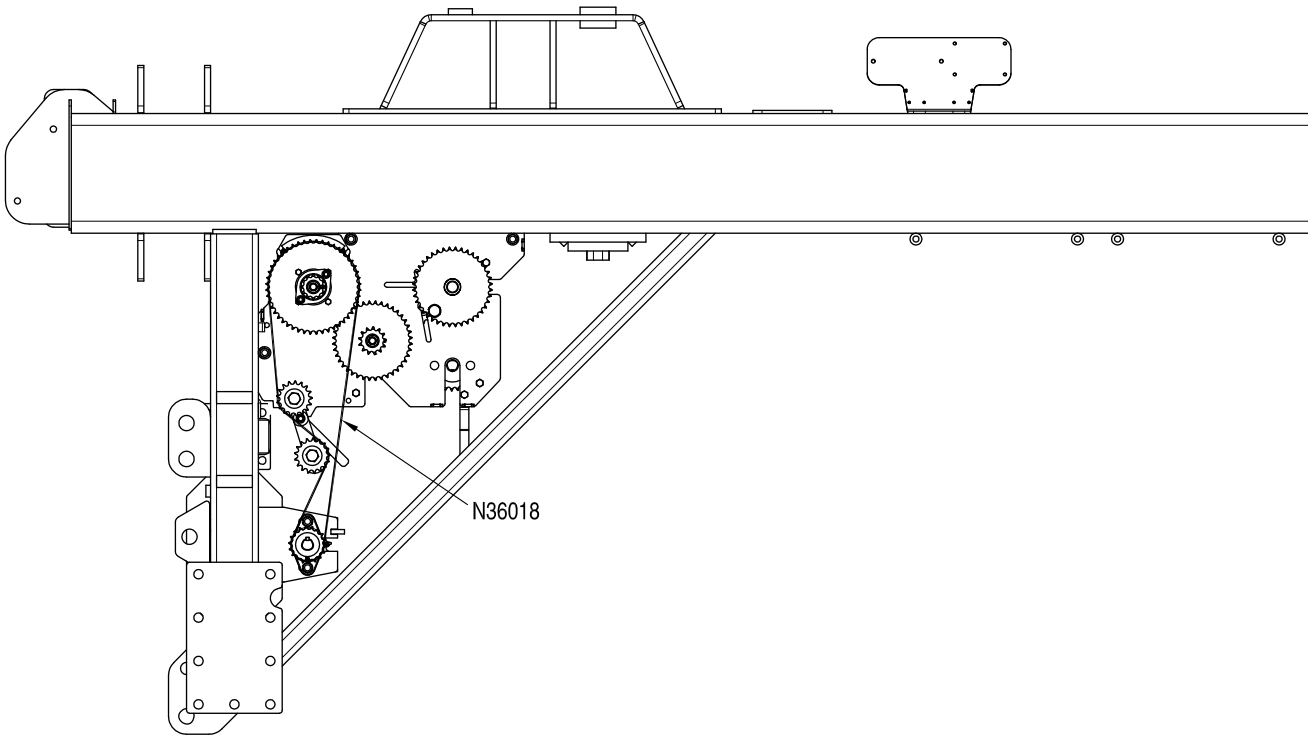

9445 Tow Behind - Prior to 2016

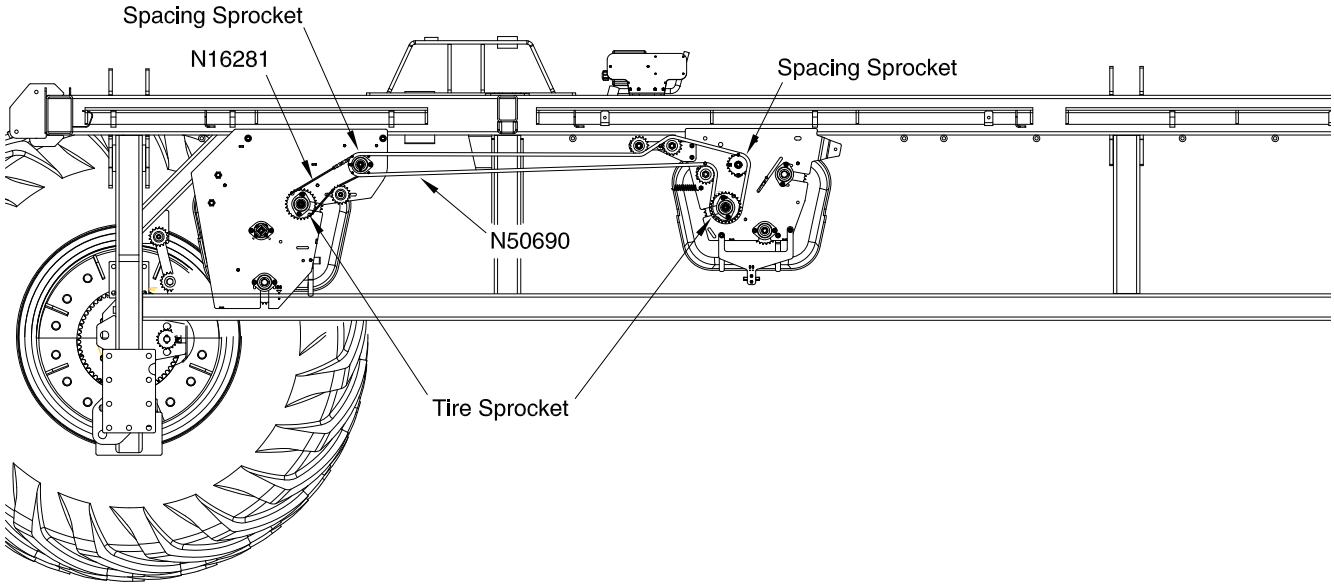

9550 Tow Behind - Prior to 2016

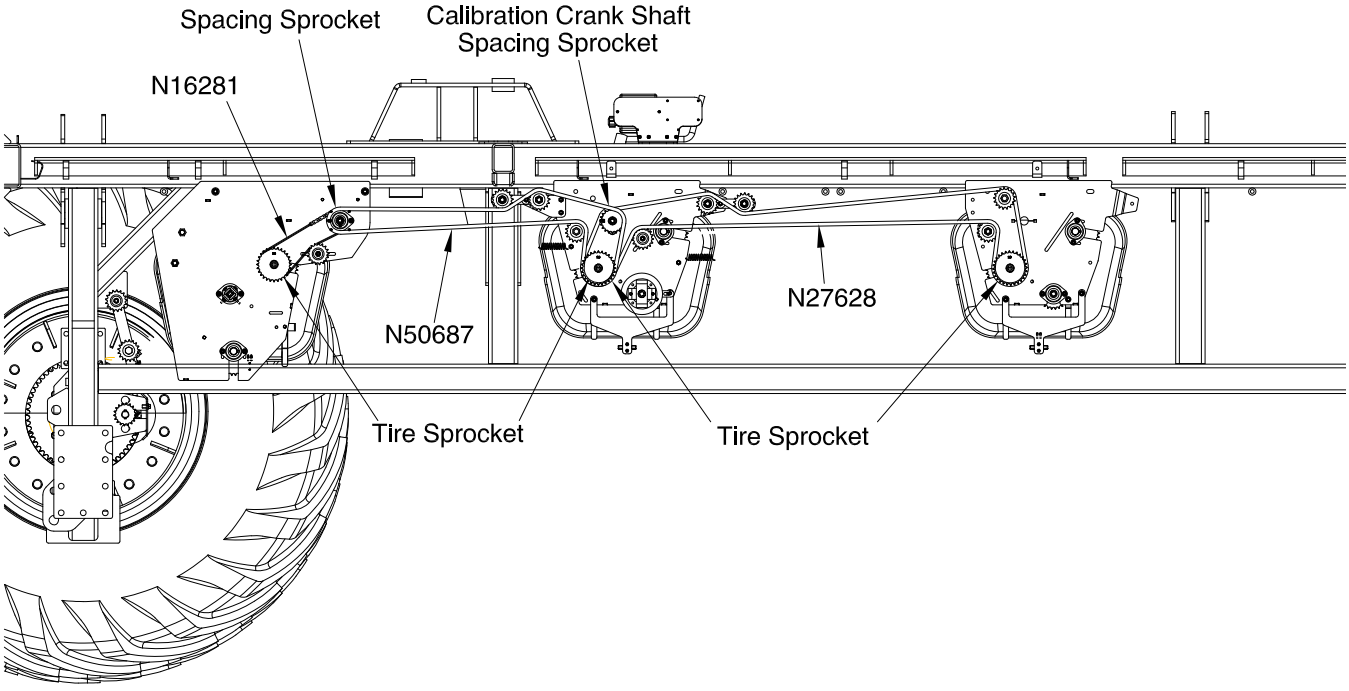

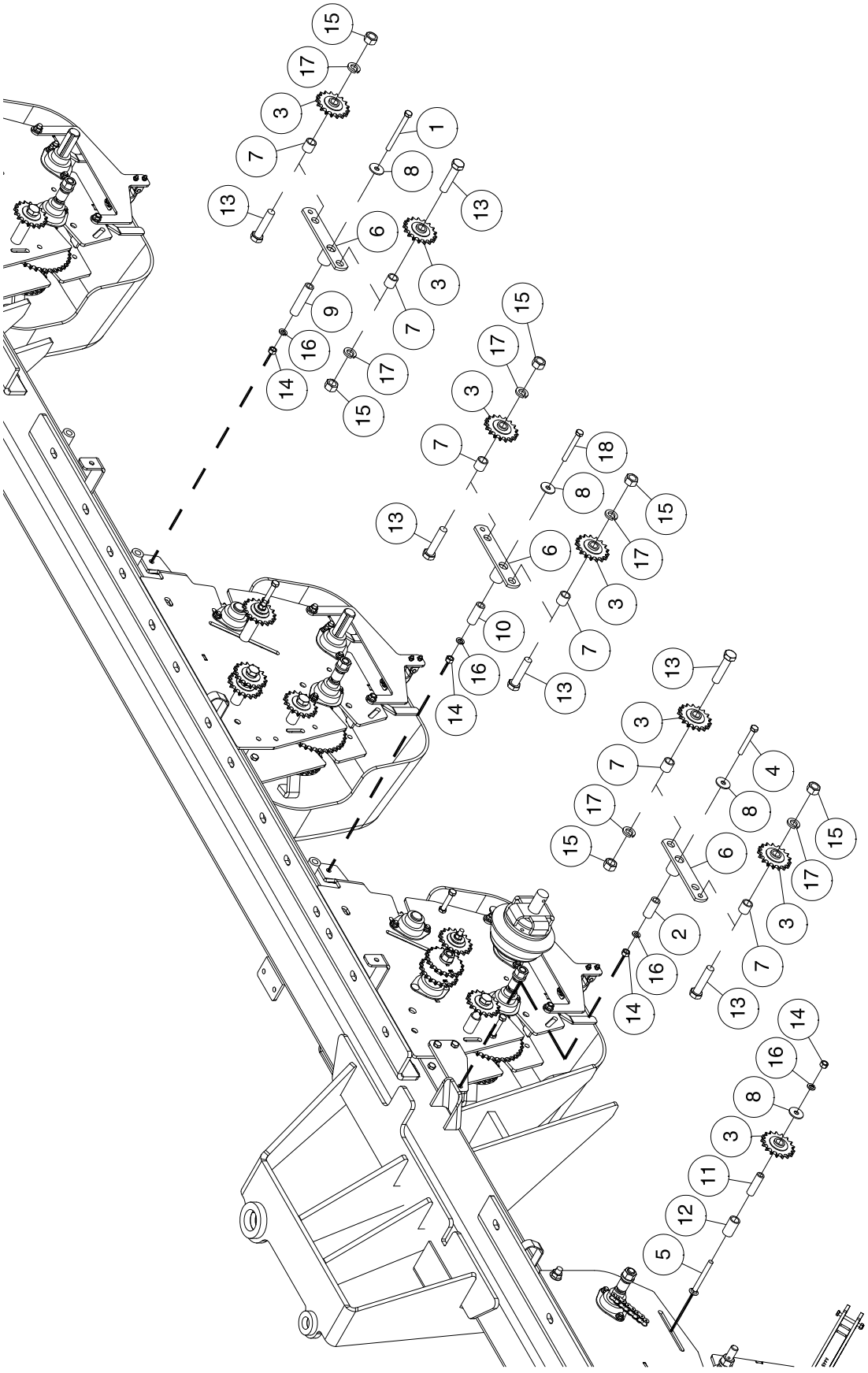
15
17
3
7
13
1
8
13
6
3
9
16
14
17
15
7
15
17
3
7
13
18
8
15
6
17
3
10
16
14
7
13
13
3
7
17
15
4
8
6
15
17
3
2
16
14
7
13
14
16
8
3
11
12
5

9650 Tow Behind - Prior to 2016

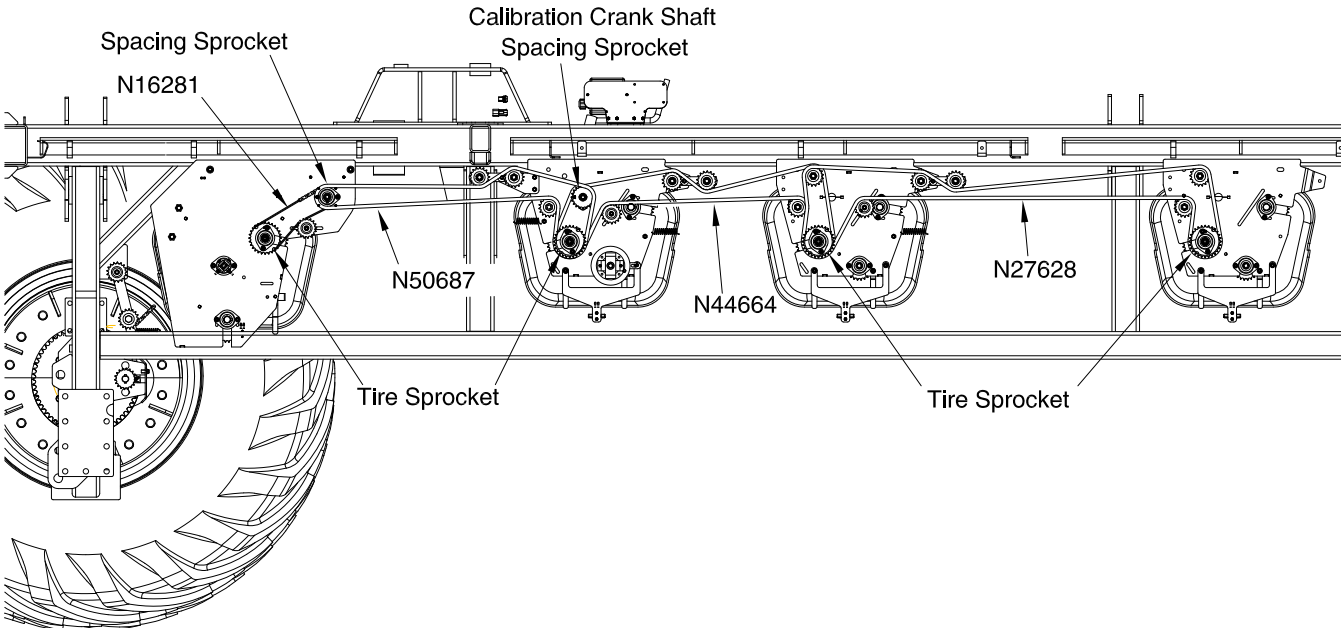

Item	Part No.	Description	Qty
1	C-1550	Hex Bolt - 3/8 x 4 Lg	1
2	D-4820	Bushing - 3/4 OD x .482 ID x 1 3/4 Lg	1
3	D17808	Sprocket IDler - 40A17 - W/5/8 Bore	7
4	H-1790	Hex Bolt - 3/8 x 2 3/4 Lg	1
5	N19283	Carriage Bolt - 3/8 x 3-1/2 Lg	1
6	N19288	Idler Arm	3
7	N19577	Bushing - 7/8 OD x .657 ID x 7/8 Lg	6
8	N19706	Washer-13/32ID x 1-1/4OD x.100	4
9	N29399	Bushing - 3/4 OD x .482 ID x 3 1/8 Lg	1
10	N31066	Spacer - 3/4 OD x .482 ID x 1 15/16 Lg	1
11	N50683	Bushing - 5/8 OD x .385 ID x 2 1/8 Lg	1
12	N50843	Bushing - 7/8 OD x .657 ID x 1 9/16 Lg	1
13	W-502	Hex Bolt - 5/8 x 2-3/4 Lg	6
14	W-514	Hex Nut - 3/8	4
15	W-517	Hex Nut - 5/8	6
16	W-523	Lockwasher - 3/8	4
17	W-526	Lockwasher - 5/8	6
18	W-1854	Hex Bolt - 3/8 x 3 Lg	1

9445, 9550 and 9650 Tow Between - Clutch Drive - Prior to 2016

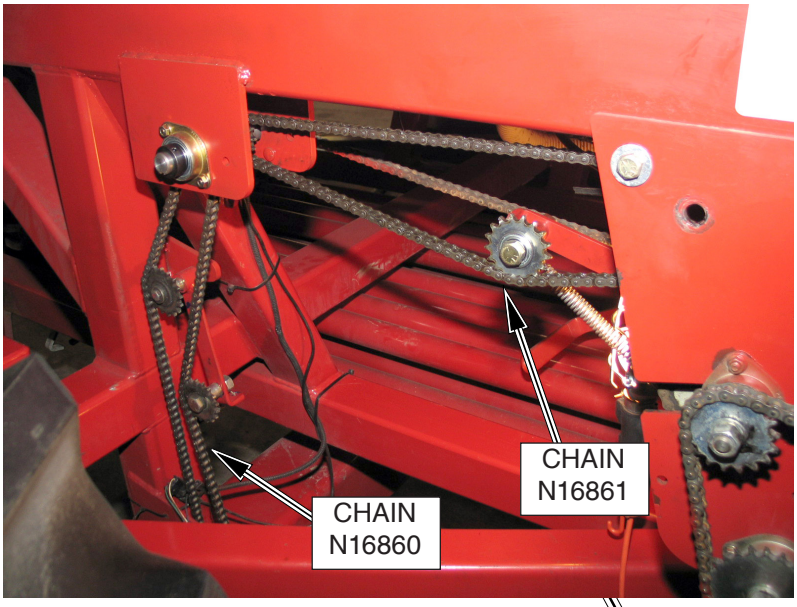

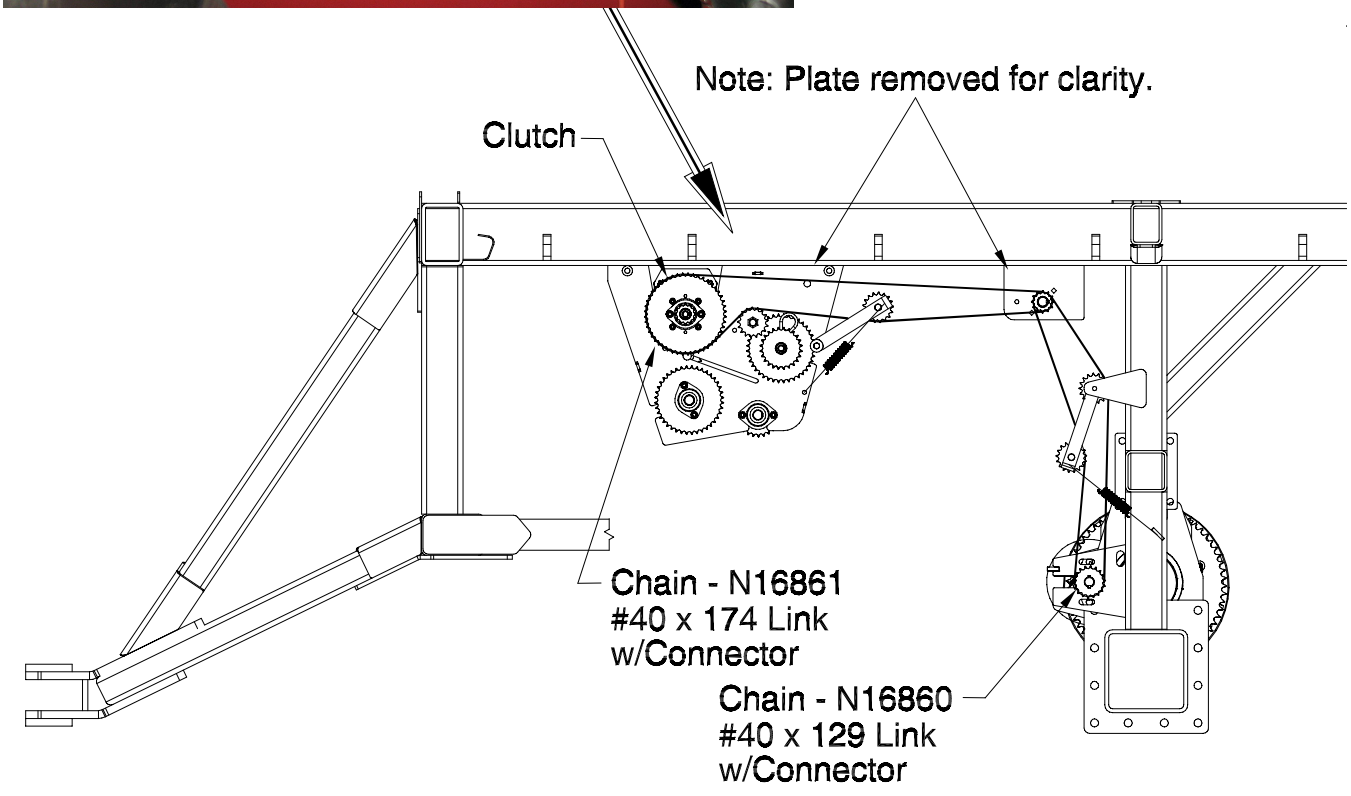

9445 Tow Between - Prior to 2016

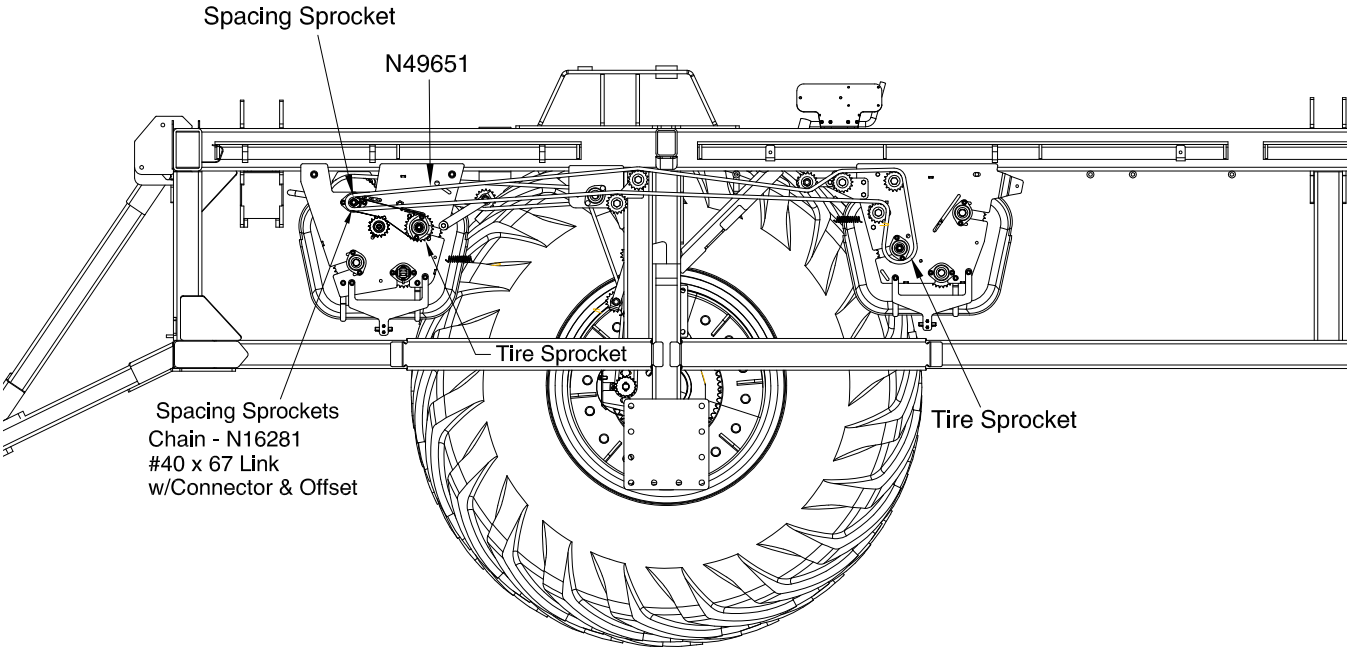

9550 Tow Between - Prior to 2016

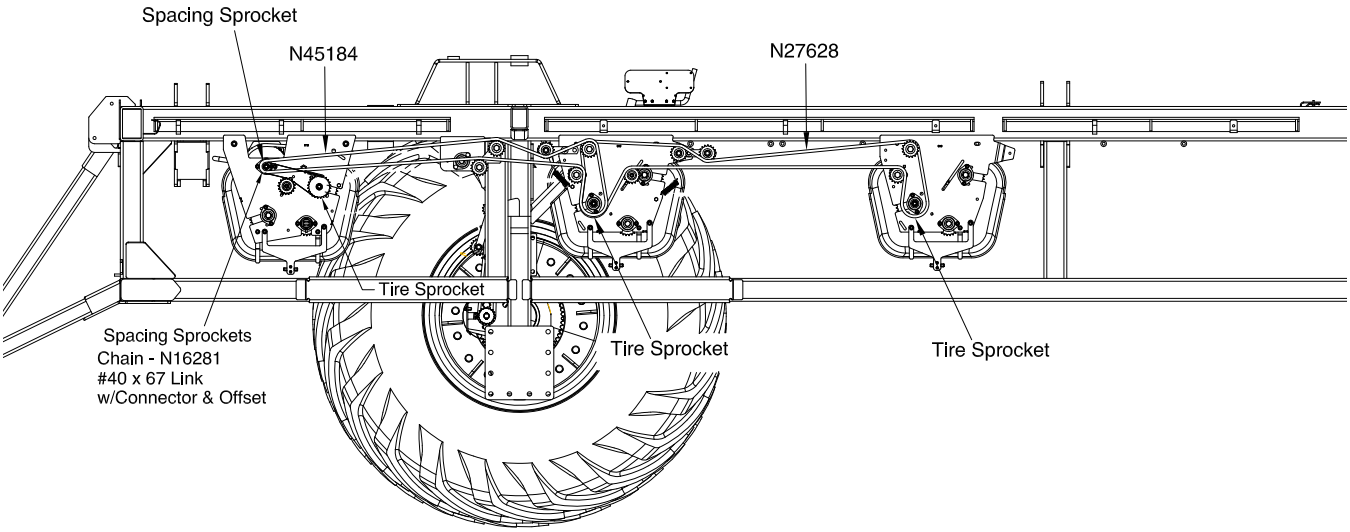

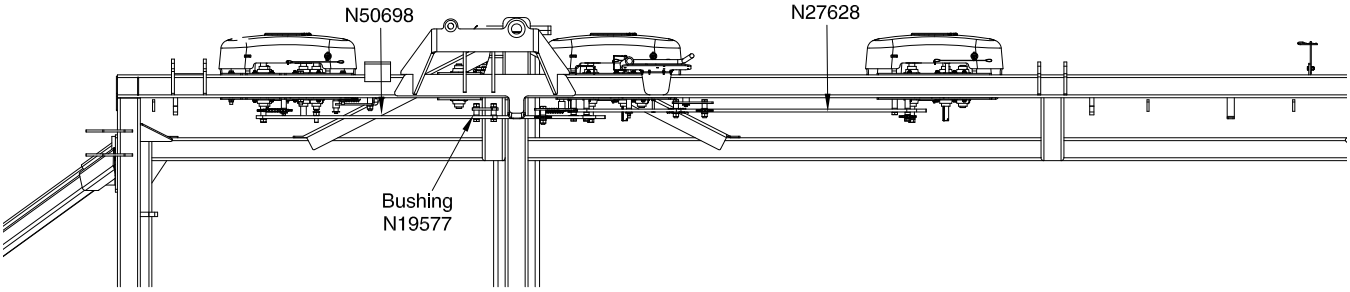

Meter Drive Chains
9445, 9550 and 9650 - Tow Between - Prior to 2016

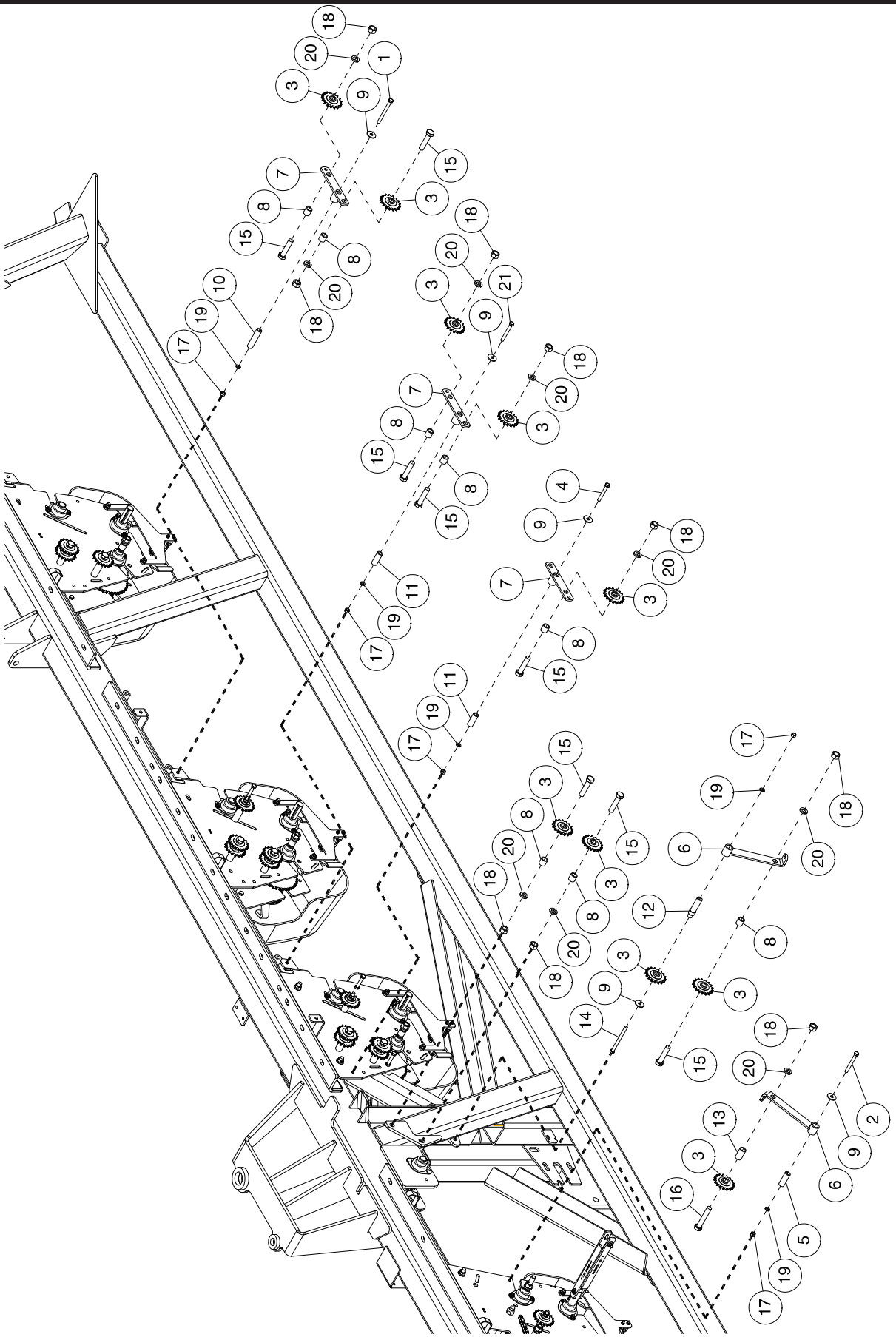

9650 Tow Between - Prior to 2016

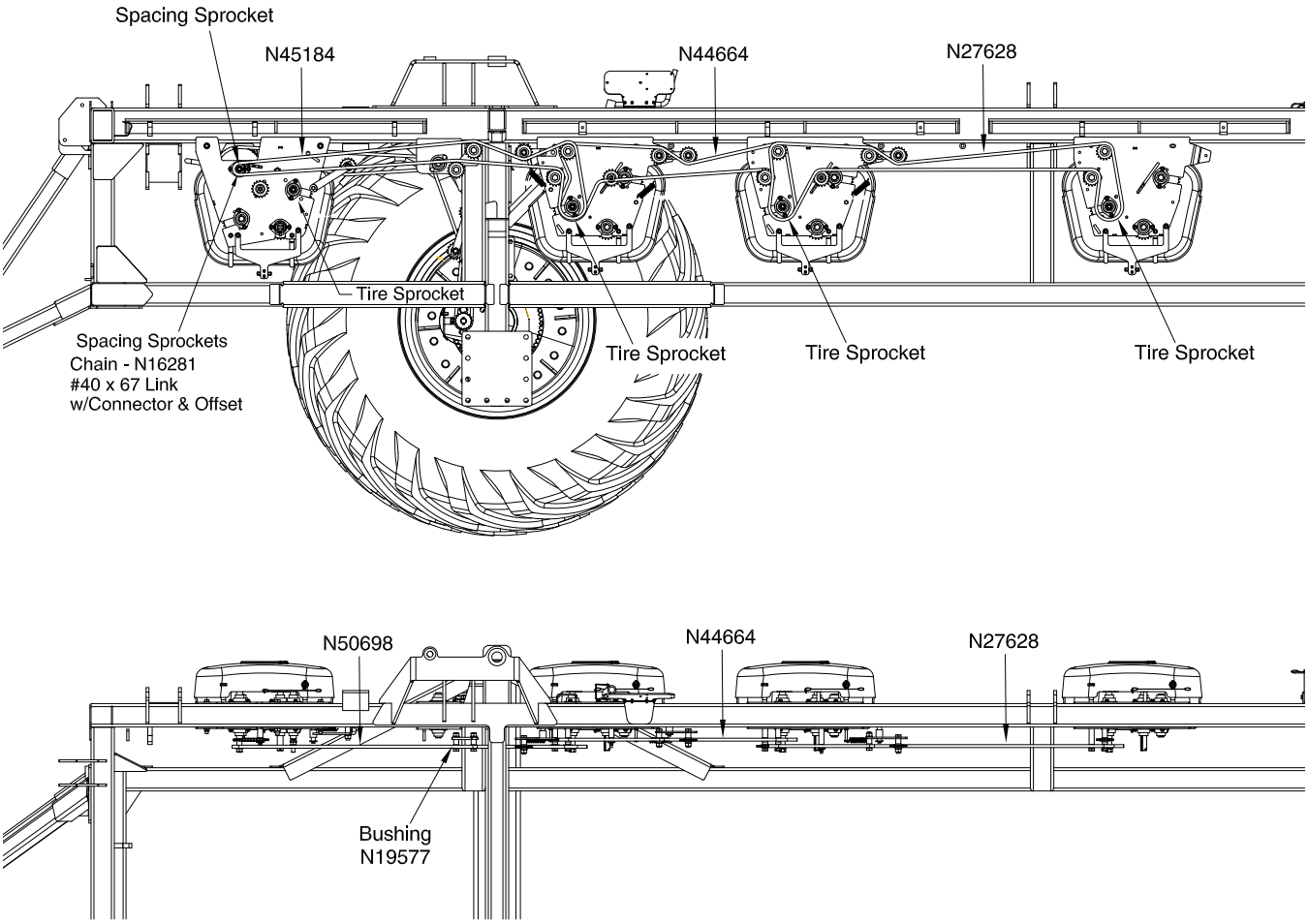

Item	Part No.	Description	Qty
1	C-1550	Hex Bolt - 3/8 x 4 Lg	1
2	D-5249	Hex Bolt - 3/8 x 3 1/4 Lg	1
3	D17808	Sprocket Idler - 40A17 - W/5/8 Bore	10
4	H-1790	Hex Bolt - 3/8 x 2 3/4 Lg	1
5	N16156	Spacer - 3/4 OD x .482 ID x 2 1/8 Lg	1
6	N19261	Idler Arm	2
7	N19288	Idler Arm	3
8	N19577	Bushing - 7/8 OD x .657 ID x 7/8 Lg	8
9	N19706	Washer-13/32ID x 1-1/4OD x.100	5
10	N29399	Bushing - 3/4 OD x .482 ID x 3 1/8 Lg	1
11	N31066	Spacer - 3/4 OD x .482 ID x 1 15/16 Lg	2
12	N44589	Bushing - .875 Dia x 3 21/64 Lg	1
13	N50843	Bushing - 7/8 OD x .657 ID x 1 9/16 Lg	1
14	S-1299	Hex Bolt - 3/8 x 4 1/2 Lg	1
15	W-502	Hex Bolt - 5/8 x 2-3/4 Lg	8
16	W-503	Hex Bolt - 5/8 x 3-1/2 Lg	1
17	W-514	Hex Nut - 3/8	5
18	W-517	Hex Nut - 5/8	9
19	W-523	Lockwasher - 3/8	5
20	W-526	Lockwasher - 5/8	9
21	W-1854	Hex Bolt - 3/8 x 3 Lg	1

9445, 9550 and 9650 - Clutch Drive - 2016 to present

Rear Axle Position

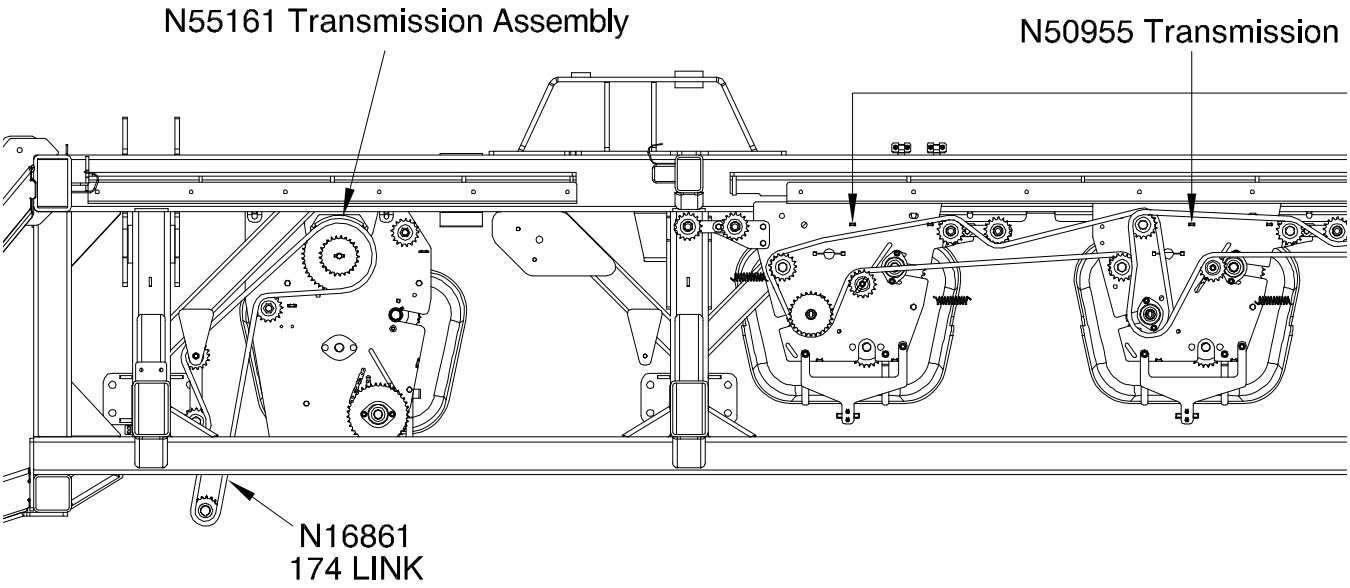

Mid Axle Position

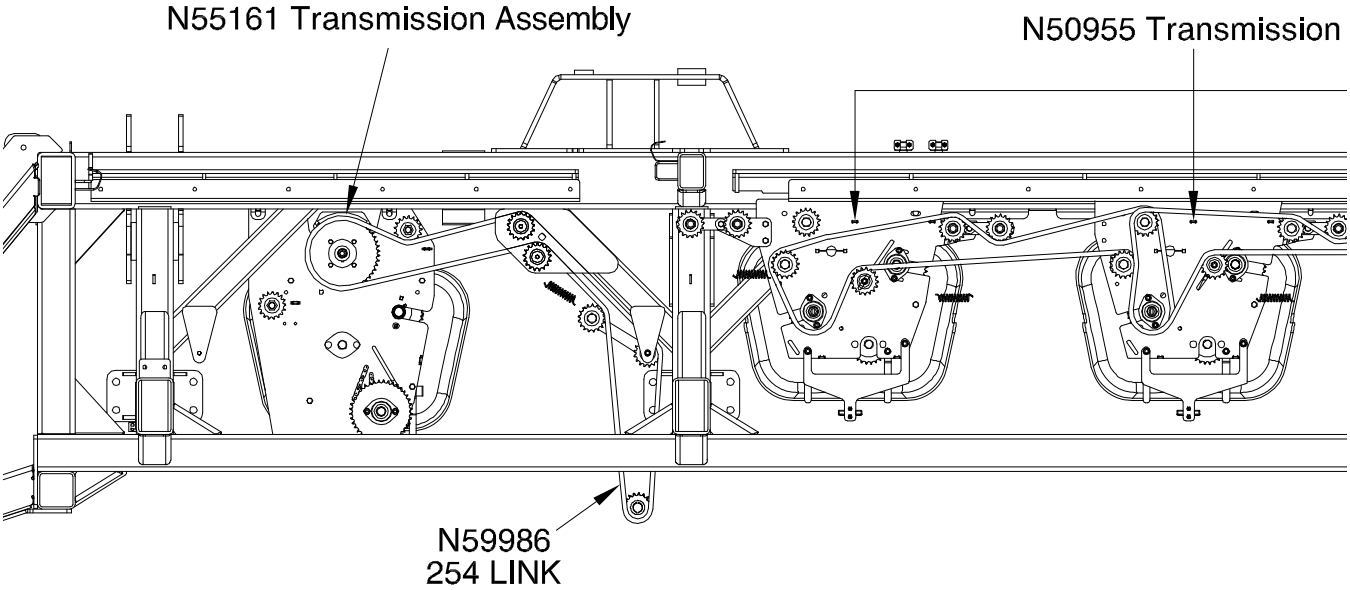

9445 - 2016 to present

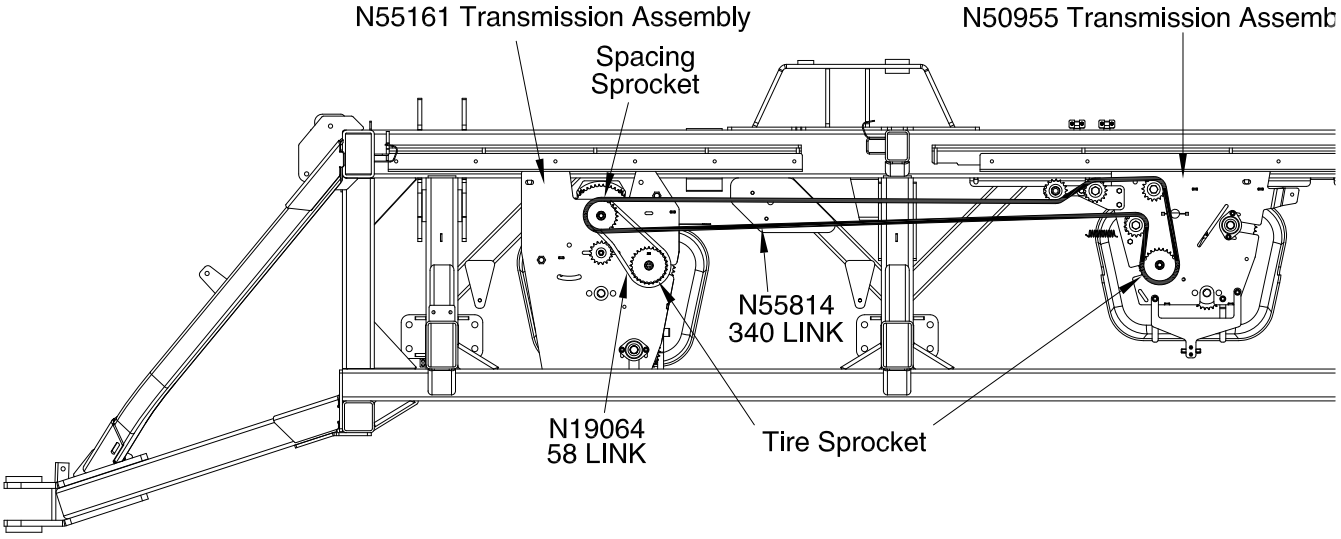

9550 - 2016 to present

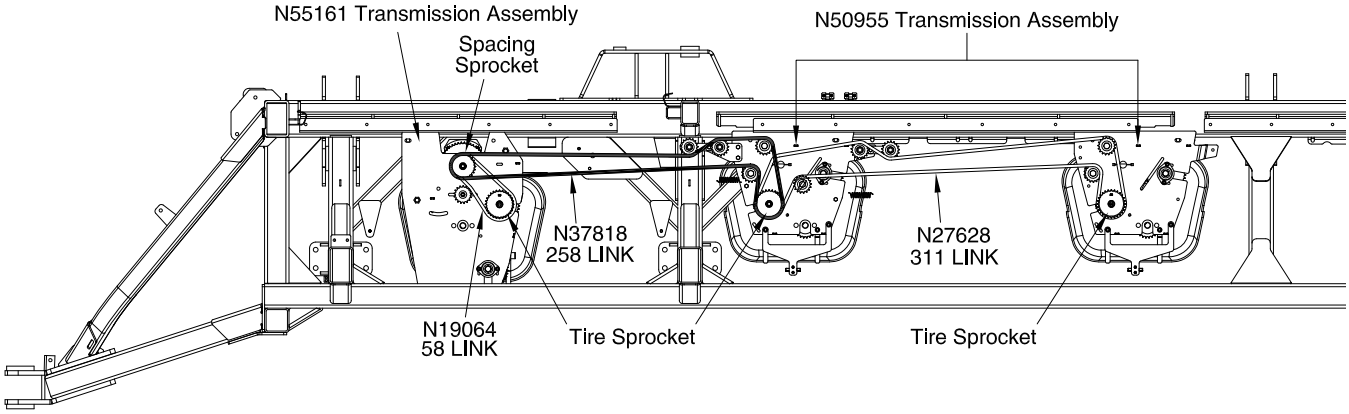

9650 - 2016 to present

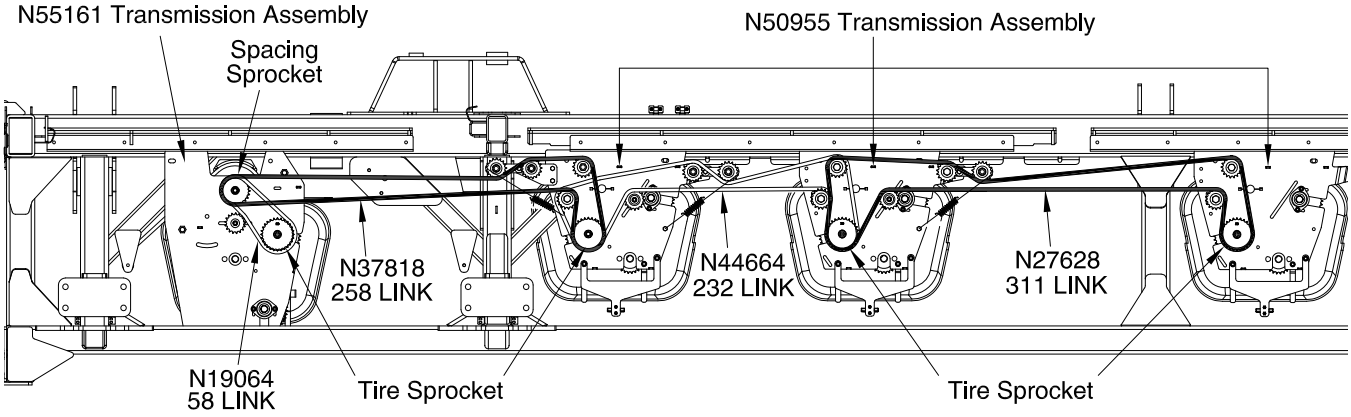

Meter Drive Chains
9445, 9550 and 9650 - 2016 to Present

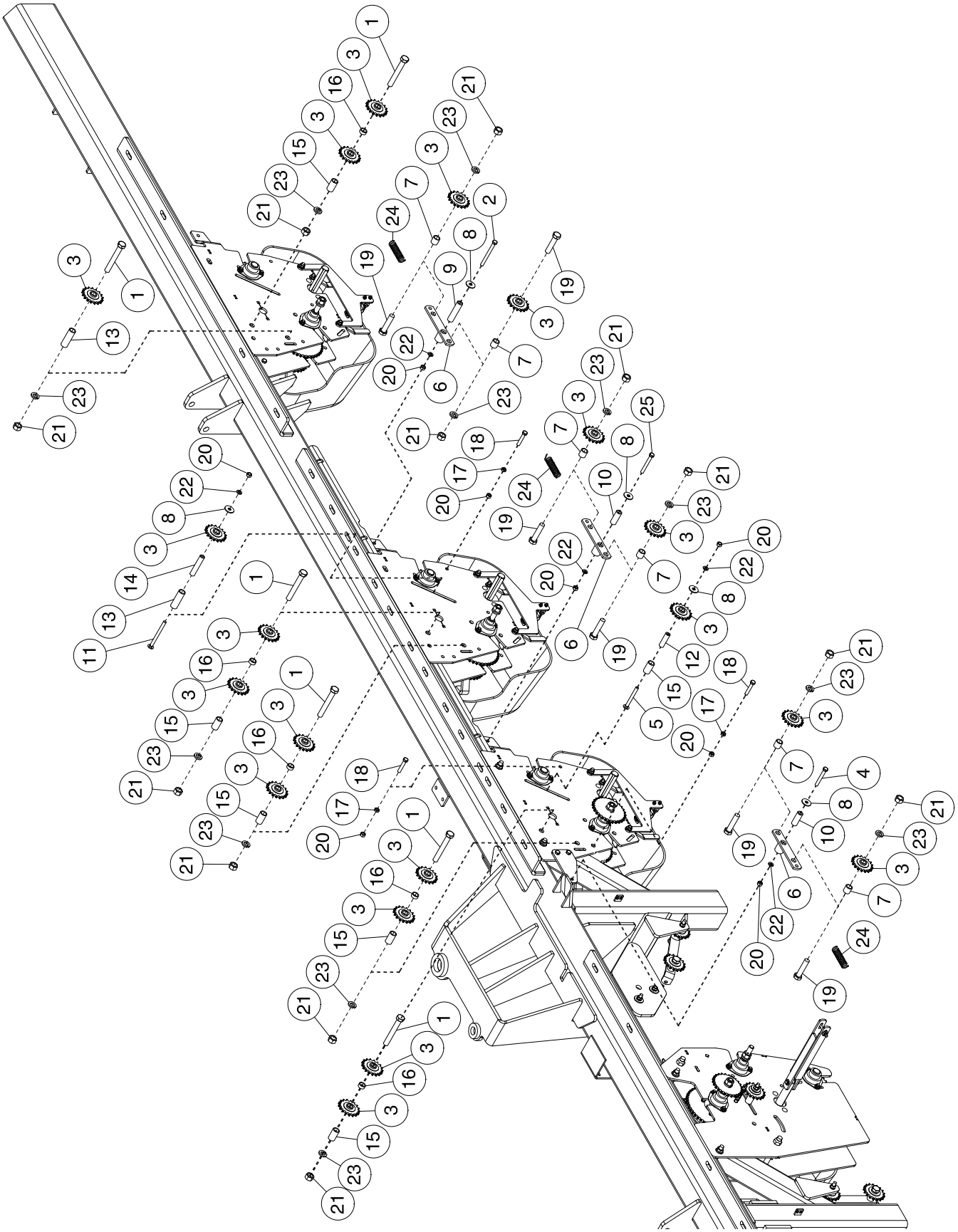

Meter Drive Chains
9445, 9550 and 9650 - 2016 to Present

Item	Part No.	Description	Qty
1	C-852	Hex Bolt 5/8 x 4 1/2 Lg	6
2	C-1550	Hex Bolt - 3/8 x 4 Lg	1
3	D17808	Sprocket Idler - 40A17	19
4	H-1790	Hex Bolt - 3/8 x 2 3/4 Lg	1
5	N19283	Carriage Bolt - 3/8 x 3-1/2 Lg	1
6	N19288	Idler Arm	3
7	N19577	Bushing - 7/8 OD x .657 ID x 7/8 Lg	6
8	N19706	Washer-13/32ID x 1-1/4OD x.100	5
9	N29399	Bushing - 3/4 OD x .482 ID x 3 1/8 Lg	1
10	N31066	Bushing - 3/4 OD x .482 ID x 1 15/16 Lg	2
11	N37219	Carriage Bolt - 3/8 x 4 1/2 Lg	1
12	N50683	Bushing - 5/8 OD x .385 ID x 2 1/8 Lg	1
13	N50684	Bushing - 7/8 OD x .657 ID x 2 11/16 Lg	2
14	N50842	Bushing - 5/8 OD x .385 ID x 3 1/4 Lg	1
15	N50843	Bushing - 7/8 OD x .657 ID x 1 9/16 Lg	6
16	N50956	Bushing - 7/8 OD x .657 ID x 3/8 Lg	5
17	S-748	Hex Jam Nut - 3/8	3
18	W-478	Hex Bolt - 3/8 x 2 Lg	3
19	W-502	Hex Bolt - 5/8 x 2-3/4 Lg	6
20	W-514	Hex Nut - 3/8	8
21	W-517	Hex Nut - 5/8	12
22	W-523	Lockwasher - 3/8	5
23	W-526	Lockwasher - 5/8	12
24	W-1663	Adjusting Spring	4
25	W-1854	Hex Bolt - 3/8 x 3 Lg	1

9800 and 91000 - Clutch Drive

Rear Axle Position

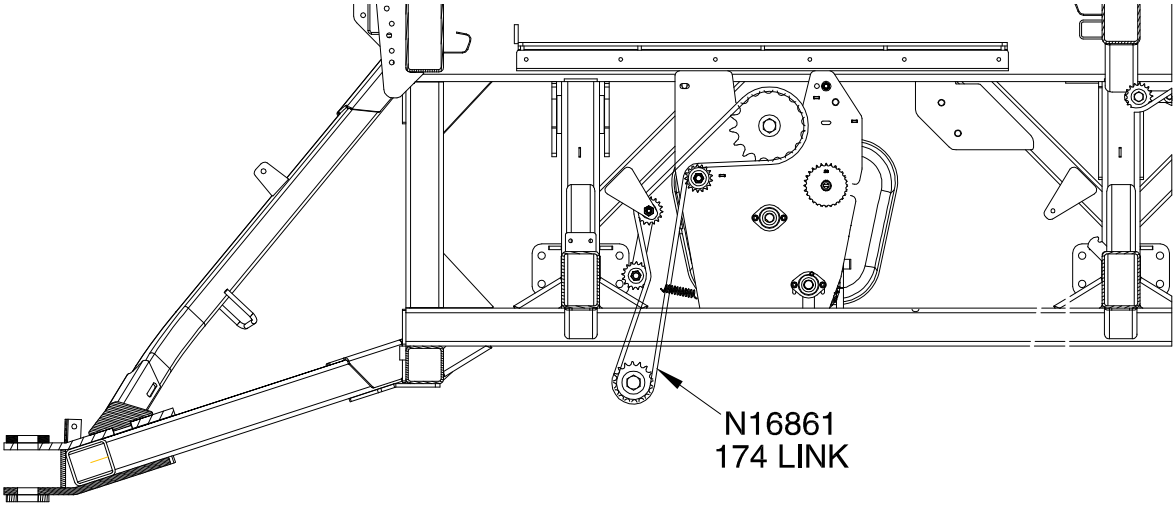

Mid Axle Position

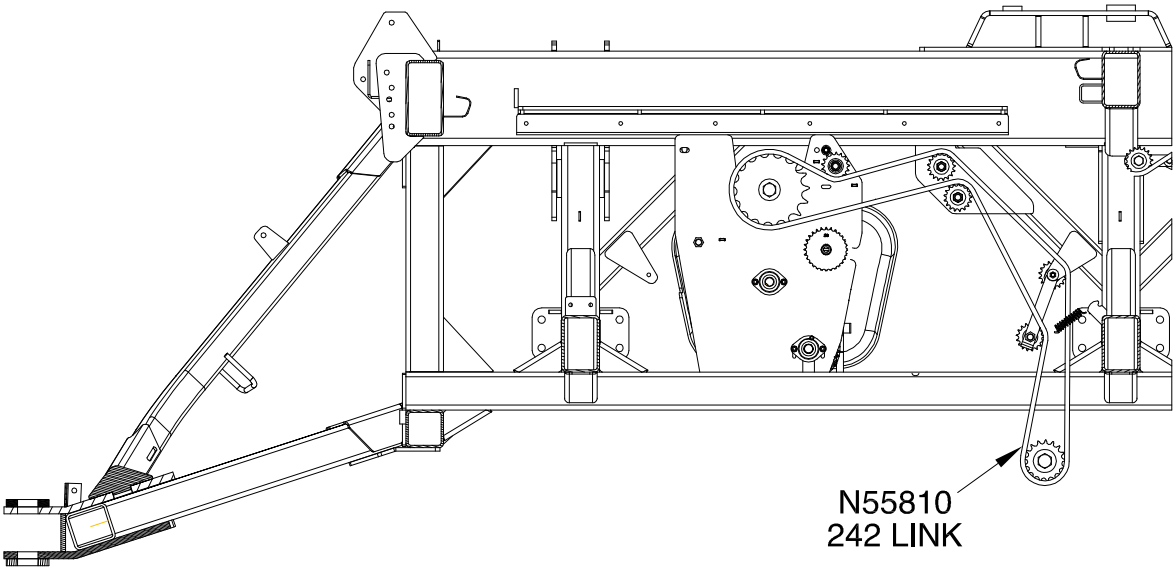

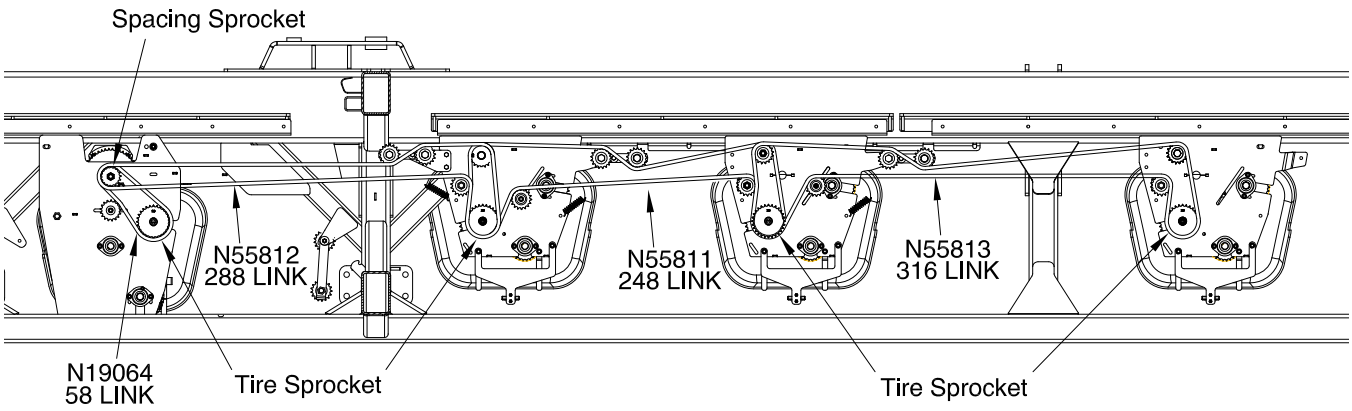

Rear Transmission - Shown with Hydraulic Calibration

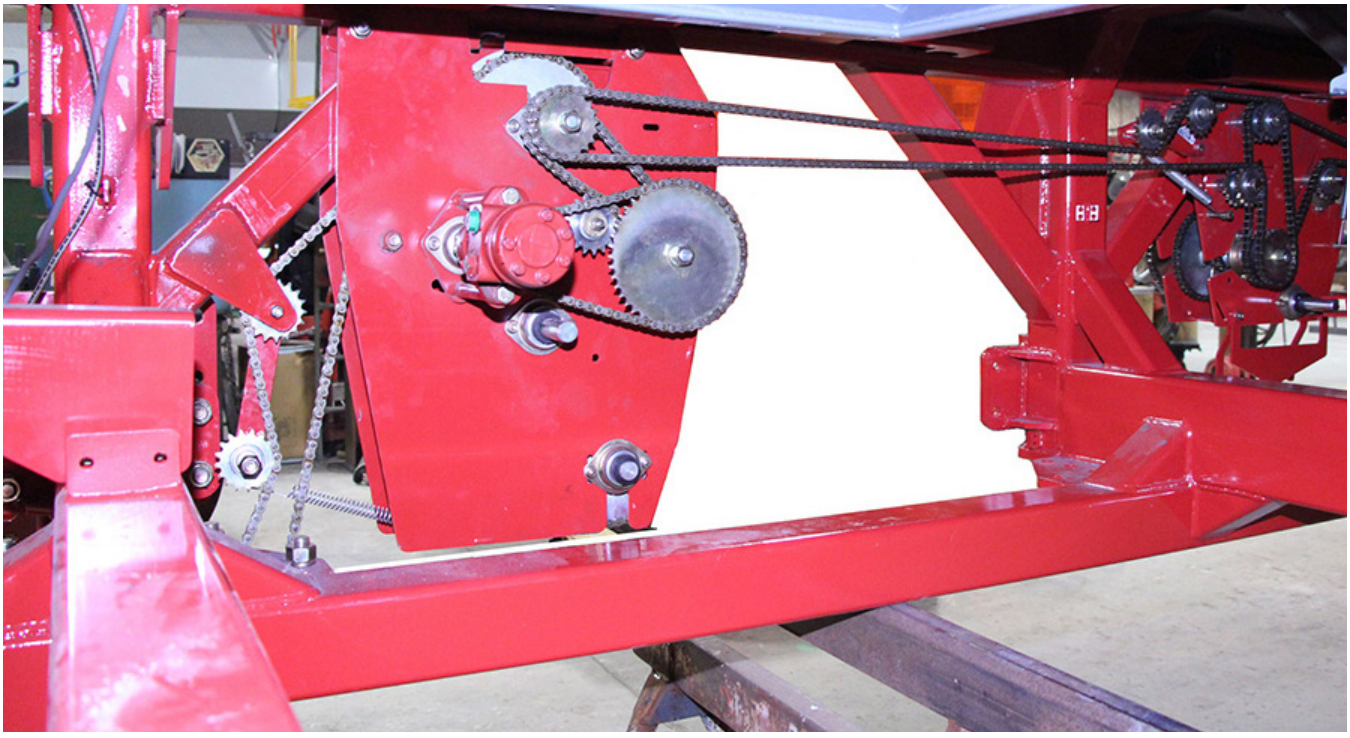

Meter Drive Chains
9800 and 91000

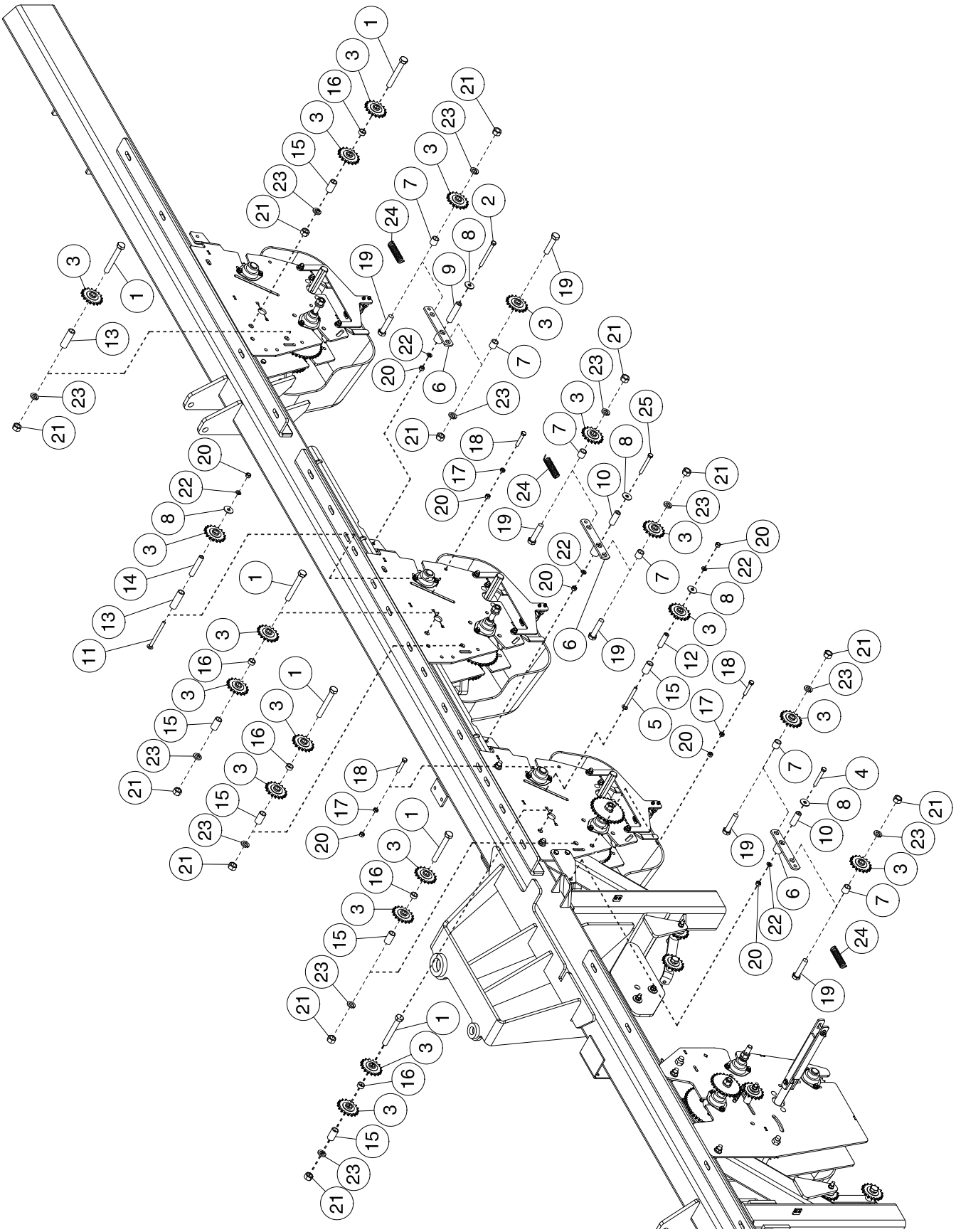

Meter Drive Chains
9800 and 91000

Item	Part No.	Description	Qty
1	C-852	Hex Bolt - 5/8 x 4 1/2 Lg	6
2	C-1550	Hex Bolt - 3/8 x 4 Lg	1
3	D17808	Sprocket Idler - 40A17	19
4	H-1790	Hex Bolt - 3/8 x 2 3/4 Lg	1
5	N19283	Carriage Bolt - 3/8 x 3 1/2 Lg	1
6	N19288	Idler Arm	3
7	N19577	Bushing - 0.657 ID x 7/8 OD x 7/8 Lg	6
8	N19706	Washer - 13/32 ID x 1 1/4 OD x 0.100	5
9	N29399	Bushing - 0.482 ID x 3/4 OD x 3 1/8 Lg	1
10	N31066	Bushing - 0.482 ID x 3/4 OD x 1 15/16 Lg	2
11	N37219	Carriage Bolt - 3/8 x 4 1/2 Lg	1
12	N50683	Bushing - 5/8 OD x .385 ID x 2 1/8 Lg	1
13	N50684	Bushing - 7/8 OD x .657 ID x 2 11/16 Lg	2
14	N50842	Bushing - 5/8 OD x .385 ID x 3 1/4 Lg	1
15	N50843	Bushing - 7/8 OD x .657 ID x 1 9/16 Lg	6
16	N50956	Bushing - 7/8 OD x .657 ID x 3/8 Lg	5
17	S-748	Hex Jam Nut - 3/8	3
18	W-478	Hex Bolt - 3/8 x 2 Lg	3
19	W-502	Hex Bolt - 5/8 x 2 3/4 Lg	6
20	W-514	Hex Nut - 3/8	8
21	W-517	Hex Nut - 5/8	12
22	W-523	Lockwasher - 3/8	5
23	W-526	Lockwasher - 5/8	12
24	W-1663	Adjusting Spring	4
25	W-1854	Hex Bolt - 3/8 x 3 Lg	1

9800

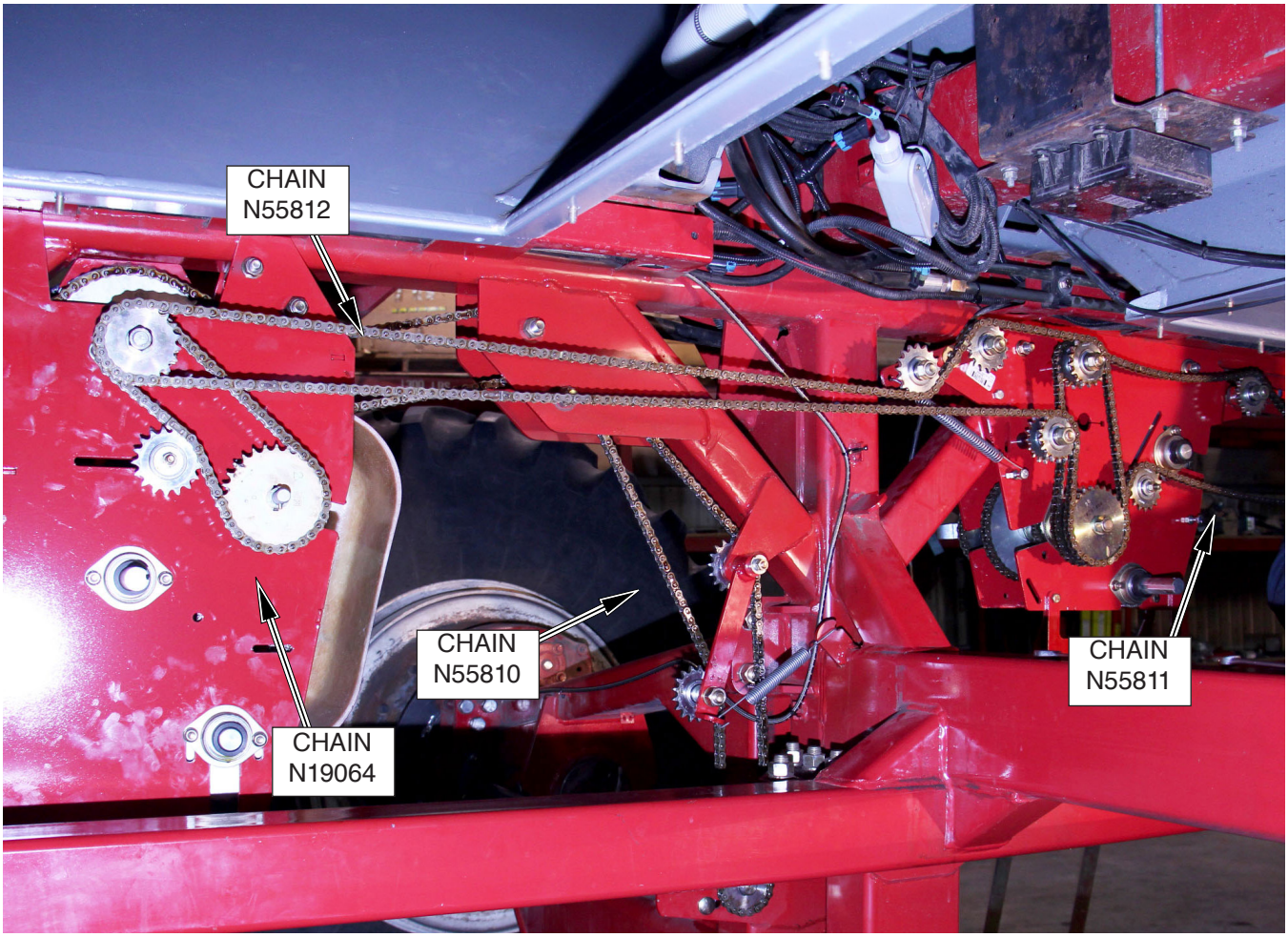
CHAIN
N55812
CHAIN
N55810
CHAIN
N55811
CHAIN
N19064

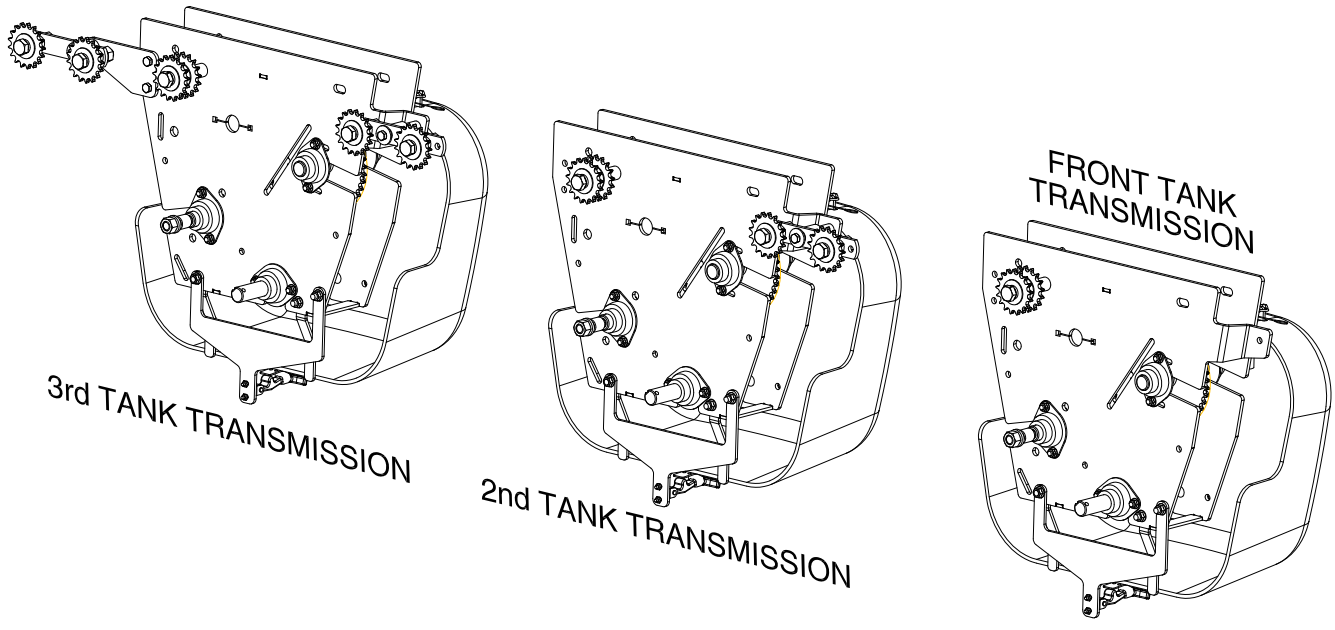
3rd TANK TRANSMISSION
2nd TANK TRANSMISSION
FRONT TANK
TRANSMISSION

9800 - 3rd Transmission

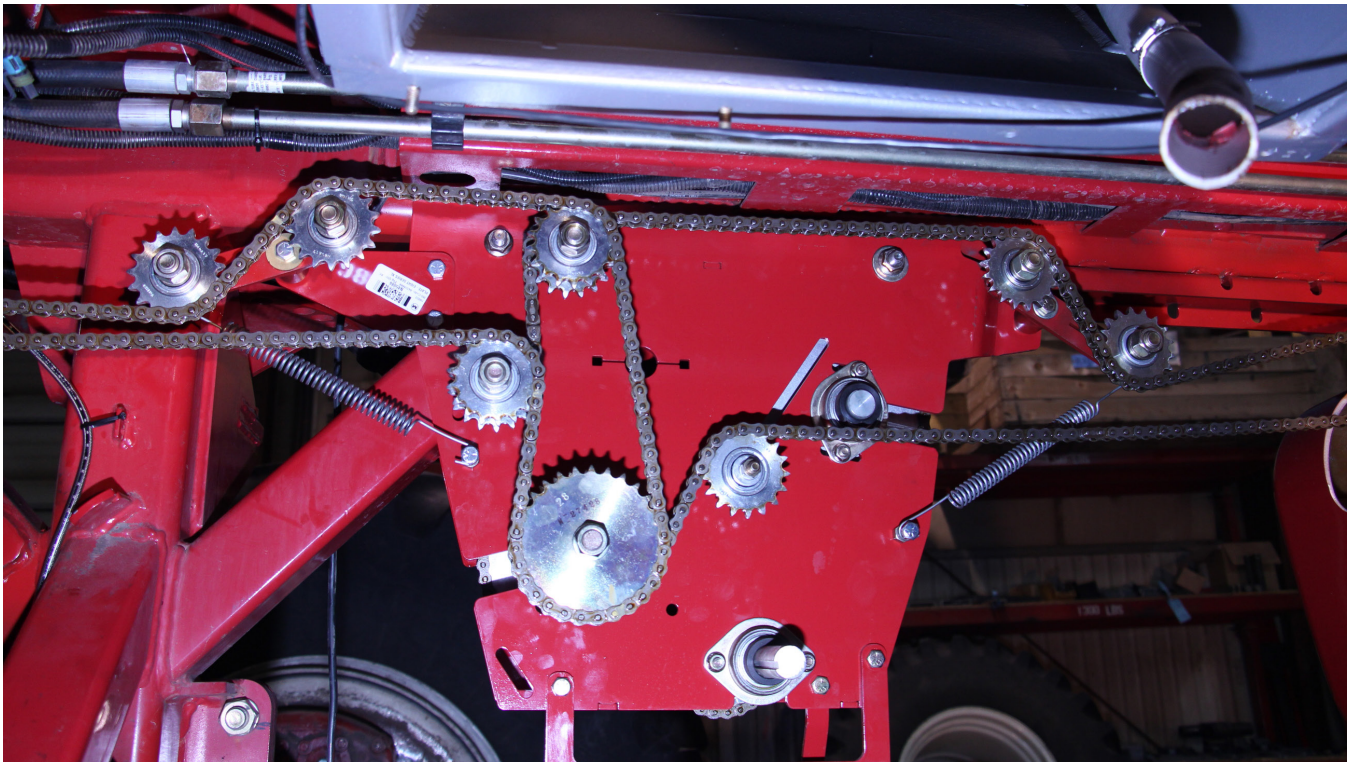

9800 - 1st and 2nd Transmission

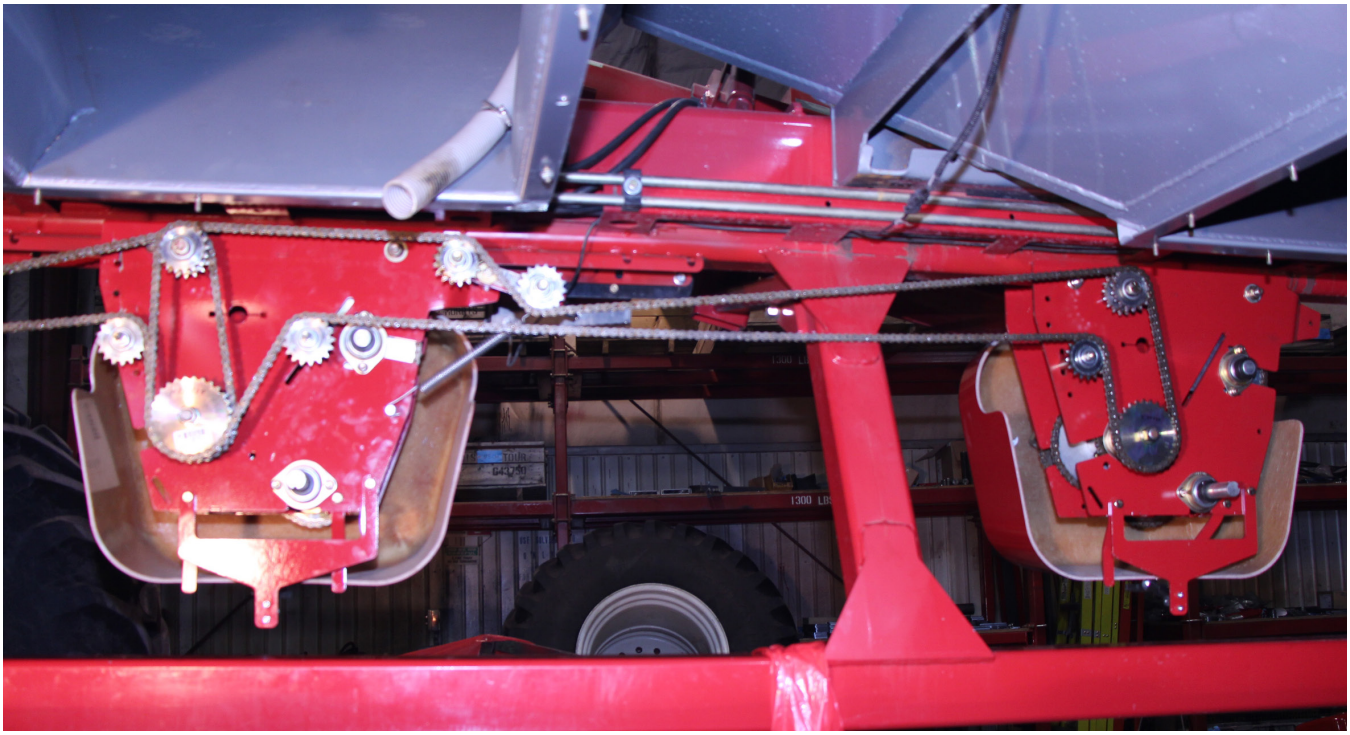

Located on Second Tank from the Back transmission on 9365 and 9450 Tow Behind and Tow Between.

Located on Second Tank from the Back transmission on 9445,9550 and 9650 Tow Behind. Prior to 2016

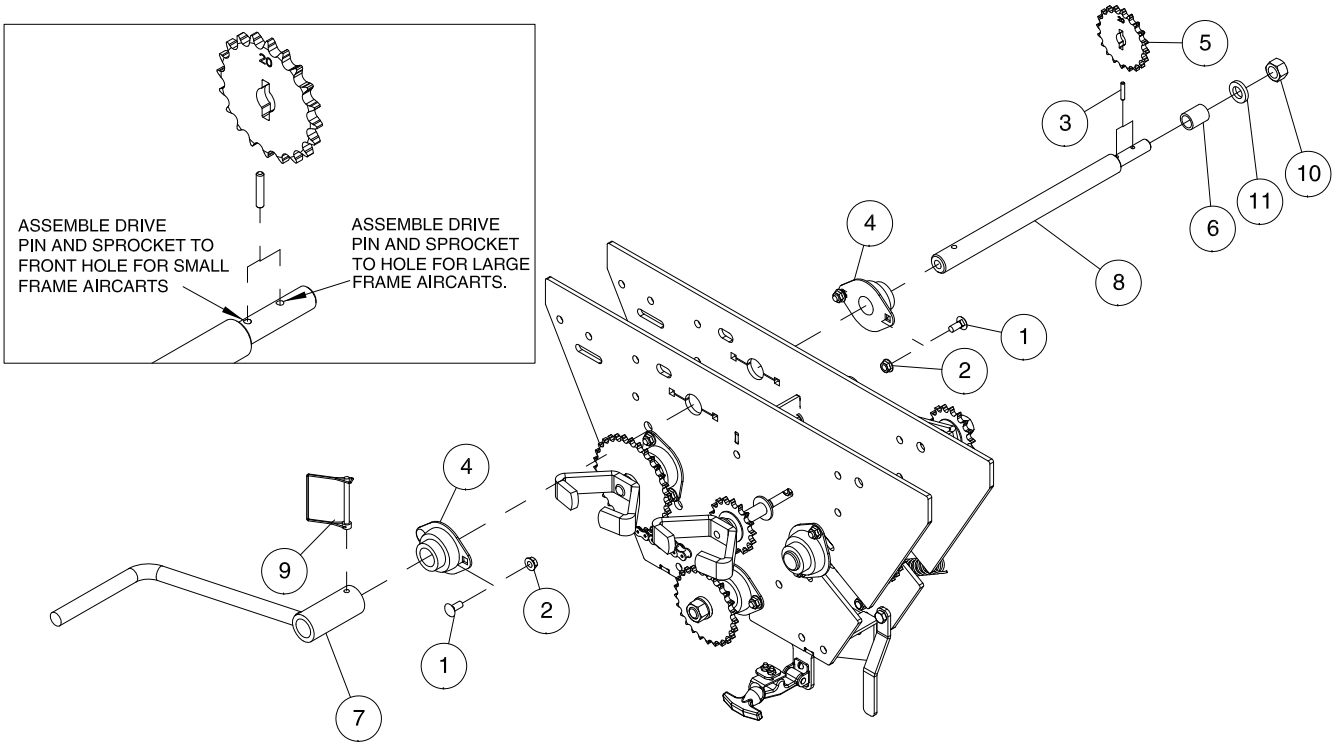

Item	Part No.	Description	Qty
1	D-5259	Carriage Bolt - 5/16 x 3/4 Lg	4
2	D-5278	Lock Nut - 5/16 Serrated Flanged	5
3	N27395	Drive Pin - 3/16 x 1 Lg	1
4	N53889	Flangette Bearing - 1” Bore	2
5	N27412	Sprocket - 40A12 - (P-Drive) - 7 1/2 opener spacing	1
	N27413	Sprocket - 40A13 - (P-Drive) - 8 opener spacing	1
	N27415	Sprocket - 40A15 - (P-Drive) - 9 opener spacing	1
	N27417	Sprocket - 40A17 - (P-Drive) - 10 opener spacing	1
	N27420	Sprocket - 40A20 - (P-Drive) - 12 opener spacing	1
	N27425	Sprocket - 40A25 - (P-Drive) - 15 opener spacing	1
6	N29200	Bushing - 7/8 OD x .657 ID	1
7	N49636	Calibration Crank	1
8	N50839	Hand Crank Shaft	1
9	N53471	Quick Pin - 1/4	1
10	W-517	Hex Nut - 5/8	1
11	W-793	Washer - .64 x 1.125 x 3/16	1

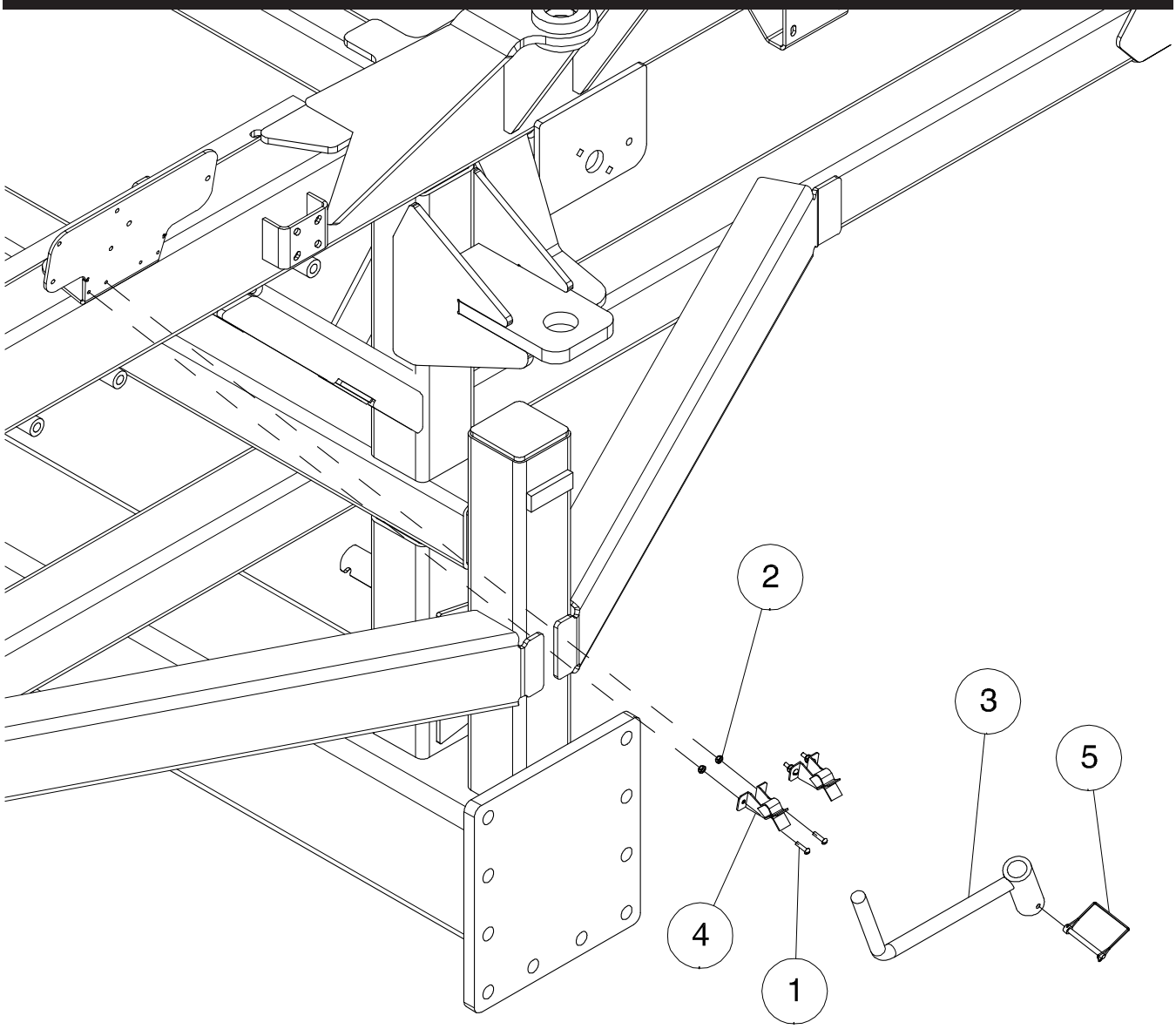

Item	Part No.	Description	Qty
1	N34961	Machine Screw - #10-24 x 3/4	4
2	N37787	Locknut - #10-24 Nylon Insert	4
3	N49636	Calibration Crank	1
4	N50697	Tool Holder	2
5	N53471	Quick Pin - 1/4	1

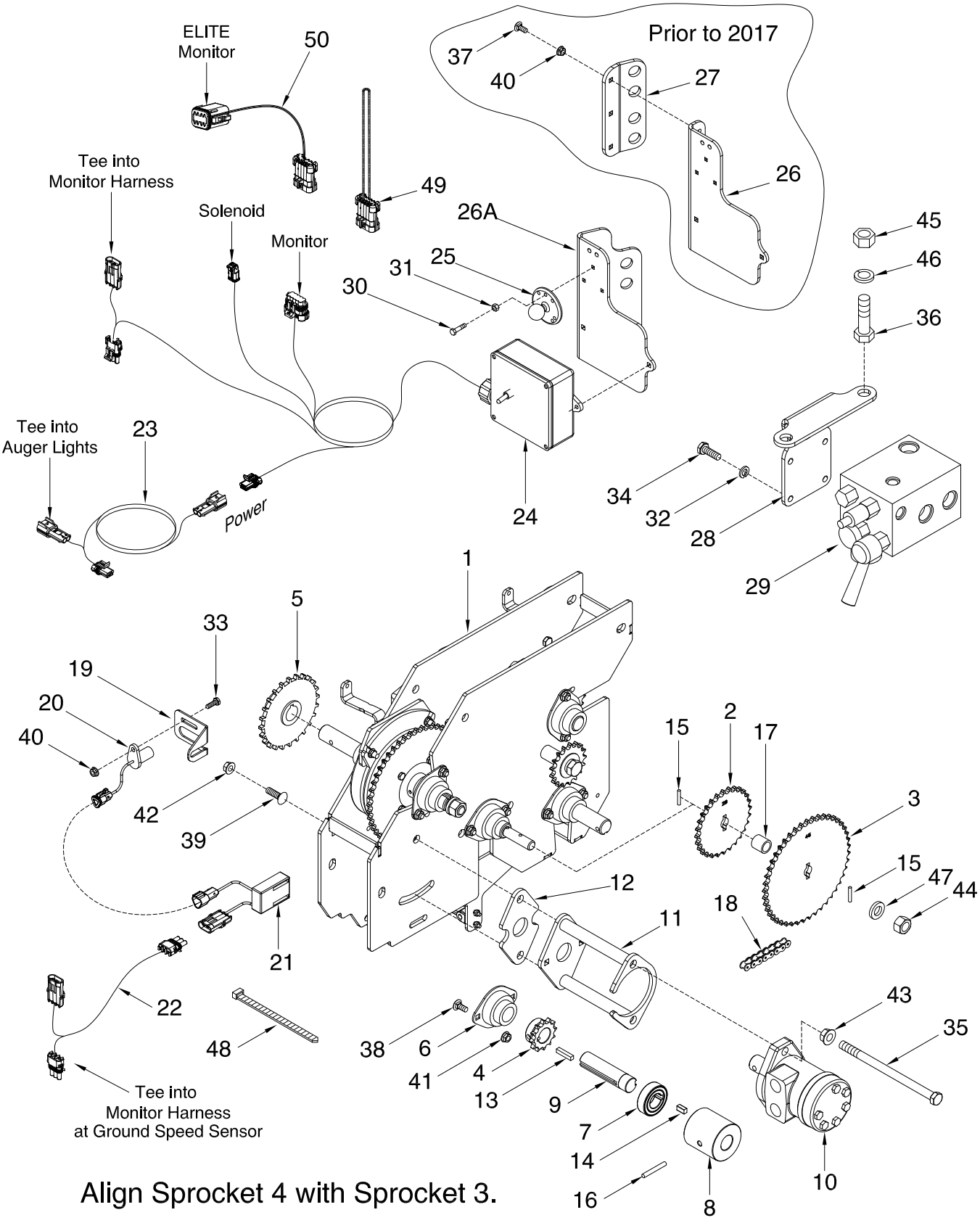

Align Sprocket 4 with Sprocket 3.

Calibration Hydraulic - Optional

Item	Part No.	Description	Qty
1	* * * * *	Rear Transmission	1
2	* * * * *	Tire Sprocket	1
3	N27445	Sprocket - 40A45 (P-Drive)	1
4	D17946	Sprocket - 40B12 w/1.002” Bore	1
5	N53013	Feedback Wheel	1
6	N53889	Flangette Bearing	1
7	N55485	Bearing - One-Way	1
8	N53941	Hub - 1-Way Bearing Mount	1
9	N53942	Shaft - Sprocket Mount	1
10	N72140	Motor - Danfoss OMPX-80 (Seal Kit N72139)	1
	N29319	Motor - Danfoss DH 80 (Seal Kit N4807) - Prior to 2021	
11	N53940	Motor Mount Bracket	1
12	N55773	Hydraulic Spacer Plate	1
13	S10730	Key - 1/4 Square x 1 1/4 Lg	1
14	N55486	Key - 1/4 x 5/16 x 5/8 Lg	1
15	N27395	Pin-Drive - 3/16 x 1 Lg (Groove)	2
16	N29375	Pin-Drive - 5/16 x 1 1/2 Lg (Groove)	1
17	N19577	Bushing Spacer - 0.657 ID x 7/8 OD x 7/8 Lg	1
18	N56573	Chain - #40-54 Link - 9365, 9450 and 9535	1
	N37414	Chain - #40-65 Lnk W/Conn+Offset - 9445, 9550	1
		S10954 - Connector #40 Chain S10955 - Offset Connector #40 Chain (Not Shown)	
19	N45199	Sensor Bracket	1
20	N56511	Hall Effect Sensor	1
21	N53300	Sensor - Hall Effect Adaptor	1
22	N56574	Wiring Harness - Sensor Tee - 24 Lg	1
23	N56471	Extension Harness - 160 Lg - 9365, 9450 and 9535	1
	N56472	Extension Harness - 192 Lg - 9445, 9550	1
24	N56470	Switch Box - Hydraulic Calibration (N56474 Switch - Momentary ON)	1
25	N55469	Mounting Ball - Monitor Mount - 1 Diameter Ball (RAM-B-202-U)	1
26	N55772	Mounting Plate - Switch (Prior to 2017)	1
26A	N64023	Mounting Plate - Switch (2017 to Present)	1
27	N55771	Mounting Plate - Hydraulic Calibration - 9365, 9450 and 9535 (Prior to 2017)	1
28	N55780	Plate-Valve Block Mount - 9365, 9450 and 9535	1
29	N56575	Valve Block - Hydraulic Calibration (See Section 14 for Details)	1
30	N16716	Screw - #10-24 x 1 Lg - Machine	3
31	N37787	Locknut - #10-24 Nylon Insert	3
32	W-523	Lockwasher - 3/8	3
33	W-469	Hex Bolt - 1/4 x 3/4	1
34	W-475	Hex Bolt - 3/8 x 1Lg	3
35	W-3687	Hex Bolt - 1/2 x 8 Lg	2
36	D-5254	Hex Bolt - 3/4 x 2 3/4 Lg - 9365, 9450 and 9535	2
37	D-5258	Carriage Bolt - 1/4 x 3/4 Lg (Prior to 2017)	3
38	D-5259	Carriage Bolt - 5/16 x 3/4 Lg	2
39	D-5260	Carriage Bolt - 3/8 x 1 1/4 Lg	1
40	D-5277	Locknut - 1/4 Serrated Flanged (Prior to 2017 Qty 4)	1
41	D-5278	Locknut - 5/16 Serrated Flanged	2
42	D-5279	Locknut - 3/8 Serrated Flanged	1
43	D14565	Locknut - 1/2 Serrated Flanged	2
44	W-517	Hex Nut - 5/8	1
45	W-518	Hex Nut - 3/4 - 9365, 9450 and 9535	2
46	W-527	Lockwasher - 3/4 - 9365, 9450 and 9535	2
47	W-793	Washer - 5/8 ID x 1 1/8 OD x 3/16	1
48	D-4838	Nylon Tie Strap-Black - 14 1/2 Lg	2
49	N56473	Plug - Monitor Connector	1
50	N72105	Harness - HYD CAL adapter - Loop Elite Monitor	1
	N29355	Decal - “Warning-Moving Parts” (Not Shown)	3
	N55786	Decal - Hydraulic Block Operation (Not Shown)	1

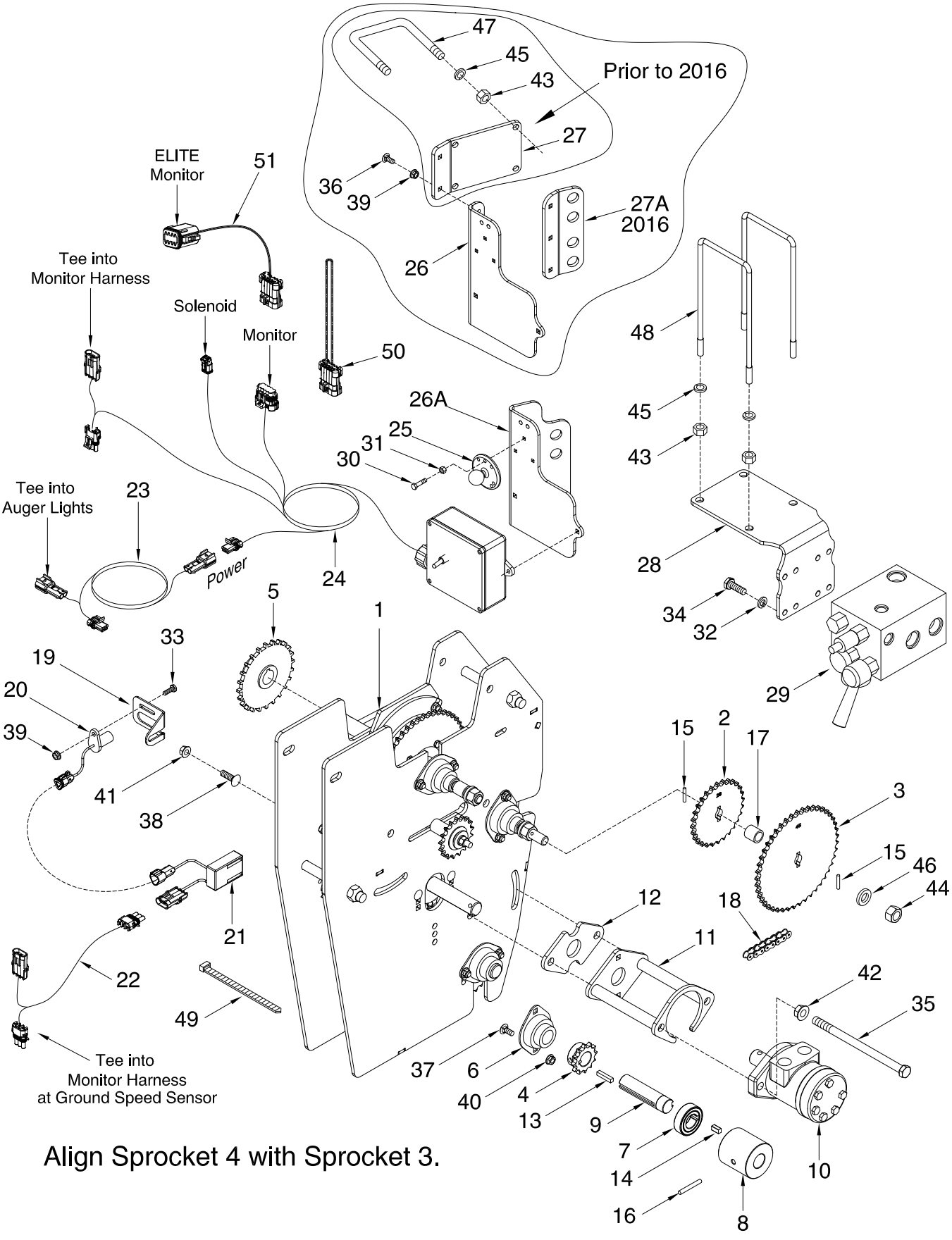

Align Sprocket 4 with Sprocket 3.

Calibration Hydraulic - Optional

Item	Part No.	Description	Qty
1	* * * * *	Rear Transmission	1
2	* * * * *	Tire Sprocket	1
3	N27445	Sprocket - 40A45 (P-Drive)	1
4	D17946	Sprocket - 40B12 w/1.002” Bore	1
5	N53013	Feedback Wheel	1
6	N53889	Flangette Bearing	1
7	N55485	Bearing - One-Way	1
8	N53941	Hub - 1-Way Bearing Mount	1
9	N53942	Shaft - Sprocket Mount	1
10	N72140	Motor - Danfoss OMPX-80 (Seal Kit N72139)	1
	N29319	Motor - Danfoss DH 80 (Seal Kit N4807) - Prior to 2021	
11	N53940	Motor Mount Bracket	1
12	N55773	Hydraulic Spacer Plate	1
13	S10730	Key - 1/4 Square x 1 1/4 Lg	1
14	N55486	Key - 1/4 x 5/16 x 5/8 Lg	1
15	N27395	Pin-Drive - 3/16 x 1 Lg (Groove)	2
16	N29375	Pin-Drive - 5/16 x 1 1/2 Lg (Groove)	1
17	N19577	Bushing Spacer - 0.657 ID x 7/8 OD x 7/8 Lg	1
18	N19064	Chain - #40-58 Link W/Conn	1
		S10954 - Connector #40 Chain S10955 - Offset Connector #40 Chain (Not Shown)	
19	N45199	Sensor Bracket	1
20	N56511	Hall Effect Sensor	1
21	N53300	Sensor - Hall Effect Adaptor	1
22	N56574	Wiring Harness - Sensor Tee - 24 Lg	1
23	N56472	Extension Harness - 192 Lg	1
24	N56470	Switch Box - Hydraulic Calibration (N56474 Switch - Momentary ON)	1
25	N55469	Mounting Ball - Monitor Mount - 1 Diameter Ball (RAM-B-202-U)	1
26	N55772	Mounting Plate - Switch (Prior to 2017)	1
26A	N64023	Mounting Plate - Switch (2017 to Present)	1
27	N56891	Mount Bracket - Hydraulic Calibration (Prior to 2016)	1
27A	N55771	Mount Bracket - Hydraulic Calibration - (2016)	1
28	N56892	Plate - Valve Mount Hydraulic Calibration	1
29	N56575	Valve Block - Hydraulic Calibration (See Section 14 for Details)	1
30	N16716	Screw - #10-24 x 1 Lg - Machine	3
31	N37787	Locknut - #10-24 Nylon Insert	3
32	W-523	Lockwasher - 3/8	3
33	W-469	Hex Bolt - 1/4 x 3/4	1
34	W-475	Hex Bolt - 3/8 x 1Lg	3
35	W-3687	Hex Bolt - 1/2 x 8 Lg	2
36	D-5258	Carriage Bolt - 1/4 x 3/4 Lg (Prior to 2017)	2
37	D-5259	Carriage Bolt - 5/16 x 3/4 Lg	2
38	D-5260	Carriage Bolt - 3/8 x 1 1/4 Lg	1
39	D-5277	Locknut - 1/4 Serrated Flanged (Prior to 2017 QTY 3)	1
40	D-5278	Locknut - 5/16 Serrated Flanged	2
41	D-5279	Locknut - 3/8 Serrated Flanged	1
42	D14565	Locknut - 1/2 Serrated Flanged	2
43	W-514	Hex Nut - 3/8 (Prior to 2016 QTY 8)	4
44	W-517	Hex Nut - 5/8	1
45	W-523	Lockwasher - 3/8 (Prior to 2016 QTY 8)	4
46	W-793	Washer - 5/8 ID x 1 1/8 OD x 3/16	1
47	N15098	U-Bolt - 3/8 x 4 x 5 UL - (Prior to 2016)	2
48	N19723	U-Bolt - 3/8 x 4 x 6 15/16 UL - 9650	2
	N25457	U-Bolt - 3/8 x 4 x 8 15/16 UL - 9800 and 91000	2
49	D-4838	Nylon Tie Strap-Black - 14 1/2 Lg	2
50	N56473	Plug - Monitor Connector	1
51	N72105	Harness - HYD CAL adapter - Loop Elite Monitor	1
	N29355	Decal - “Warning-Moving Parts” (Not Shown)	3
	N55786	Decal - Hydraulic Block Operation (Not Shown)	1

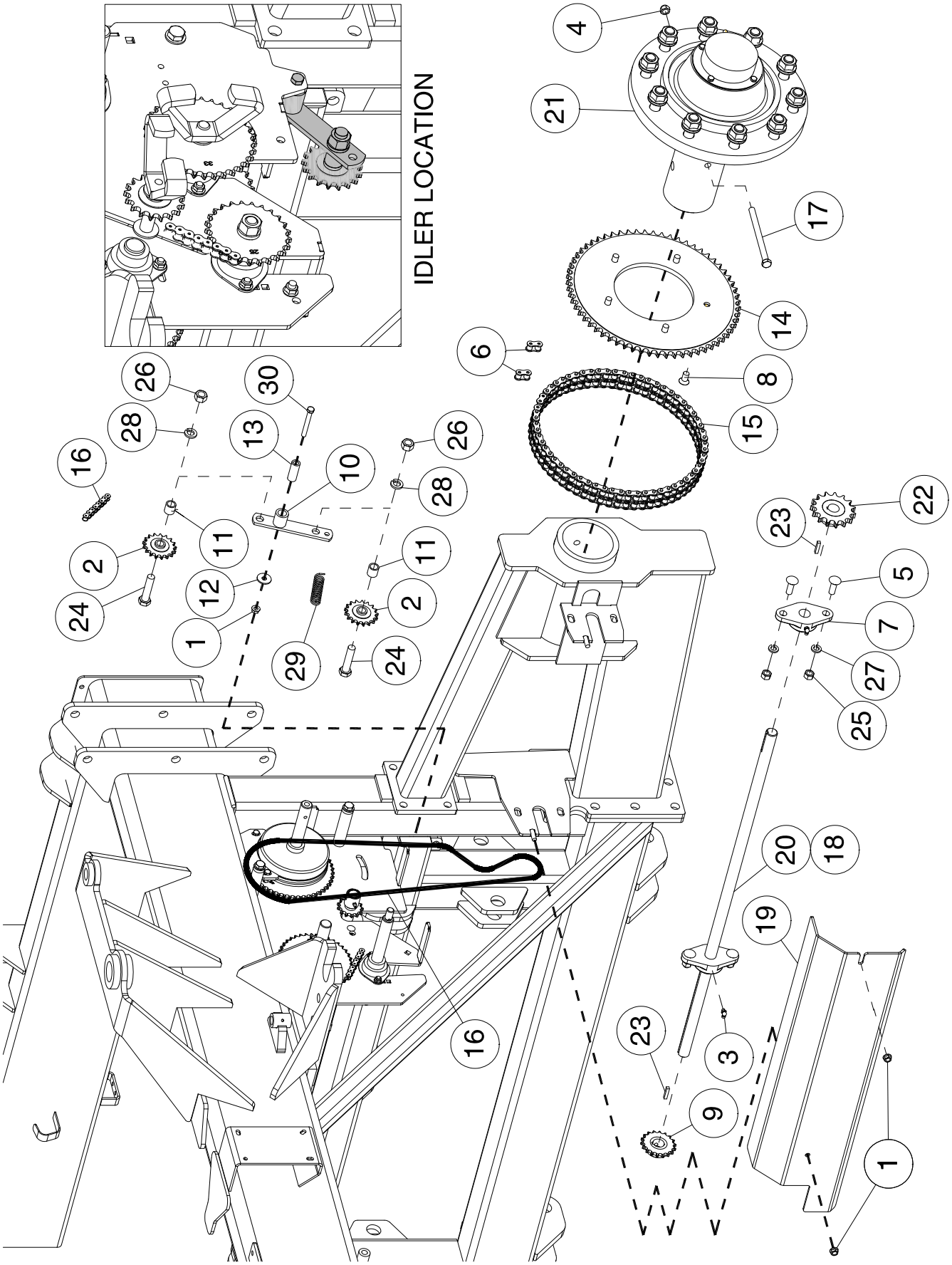
IDLER LOCATION
4
21
17
14
6
8
15
26
30
28
13
16
10
26
28
11
2
12
24
1
29
11
2
24
23
22
5
7
27
25
20
18
19
23
3
9
16
1

Jack Shaft - 9365, 9450, 9535

Item	Part No.	Description	Qty
1	D-5279	Lock Nut - 3/8 Serrated Flange	3
2	D17808	Sprocket Idler - 40A17	2
3	F-3056	Grease Zerk - 1/4 90 Degree	2
4	F-3405	Locknut - 1/2 Unitorque	1
5	H-4584	Carriage Bolt - 1/2 x 1 1/2 Lg	4
6	N19221	Chain Connector #60	2
7	N19224	Bearing - 1 Bore - 2 Bolt Flushmount	2
8	N19230	Hex Socket Cap Screw - 1/2	5
9	N19237	Sprocket - 40B18	1
10	N19288	Idler Arm	1
11	N19577	Bushing - 7/8 OD x .657 ID x 7/8 Lg	2
12	N19706	Flatwasher - 3/8	1
13	N31066	Spacer - 3/4 OD x .482 ID x 1 15/16 Lg	1
14	N32866	Sprocket - 60A63 - 7 Dia Bore	1
15	N32997	Chain - Roller #60 x 63 Link -W/Connector	1
16	N36018	Chain - #40 x 124 Link W/Connect	1
17	N37301	Hex Bolt - 1/2 x 6 1/2 Lg	1
18	N36039	Jackshaft Assembly - (Includes Items 3, 7, 9, 20, 22 & 23) - Singles	1
	N44550	Jackshaft Assembly - (Includes Items 3, 7, 9, 20A, 22 & 23) - 520 Dual Tire Option	
	N50359	Jackshaft Assembly-(Includes Items 3,7,9,20B,22&23)-800 Dual Tire Option-Tow Behind ONLY	
19	N36342	Guard - Jackshaft - Single Tire Option	1
	N45070	Guard - Jackshaft - 520 Dual Tire Option	
	N50362	Guard - Jackshaft - 43 5/8 Lg - 800 Dual Tire Option - Tow Behind ONLY	
20	N36998	Jackshaft - 30 3/4 Lg - Single Tire Option	1
20A	N45076	Jackshaft - 39 5/8 Lg - 520 Dual Tire Option	
20B	N50361	Jackshaft - 46 3/4 Lg - 800 Dual Tire Option - Tow Behind ONLY	
21	N38078	Hub and Spindle Assembly - Single Tire Option	1
	N46787	Hub and Spindle Assembly - Dual Tire Option	
22	N47415	Sprocket - 60B15	1
23	S10730	Key - 1/4 x 1/4 x 1 1/4 Lg	2
24	W-502	Hex Bolt - 5/8 x 2 3/4 Lg	2
25	W-516	Hex Nut - 1/2	4
26	W-517	Hex Nut - 5/8	2
27	W-525	Lockwasher - 1/2	4
28	W-526	Lockwasher - 5/8	2
29	W-1663	Adjusting Spring	1
30	W-1854	Hex Bolt - 3/8 x 3 Lg	1

Jack Shaft
9445, 9550, 9650 - Tow Behind - Prior to 2016

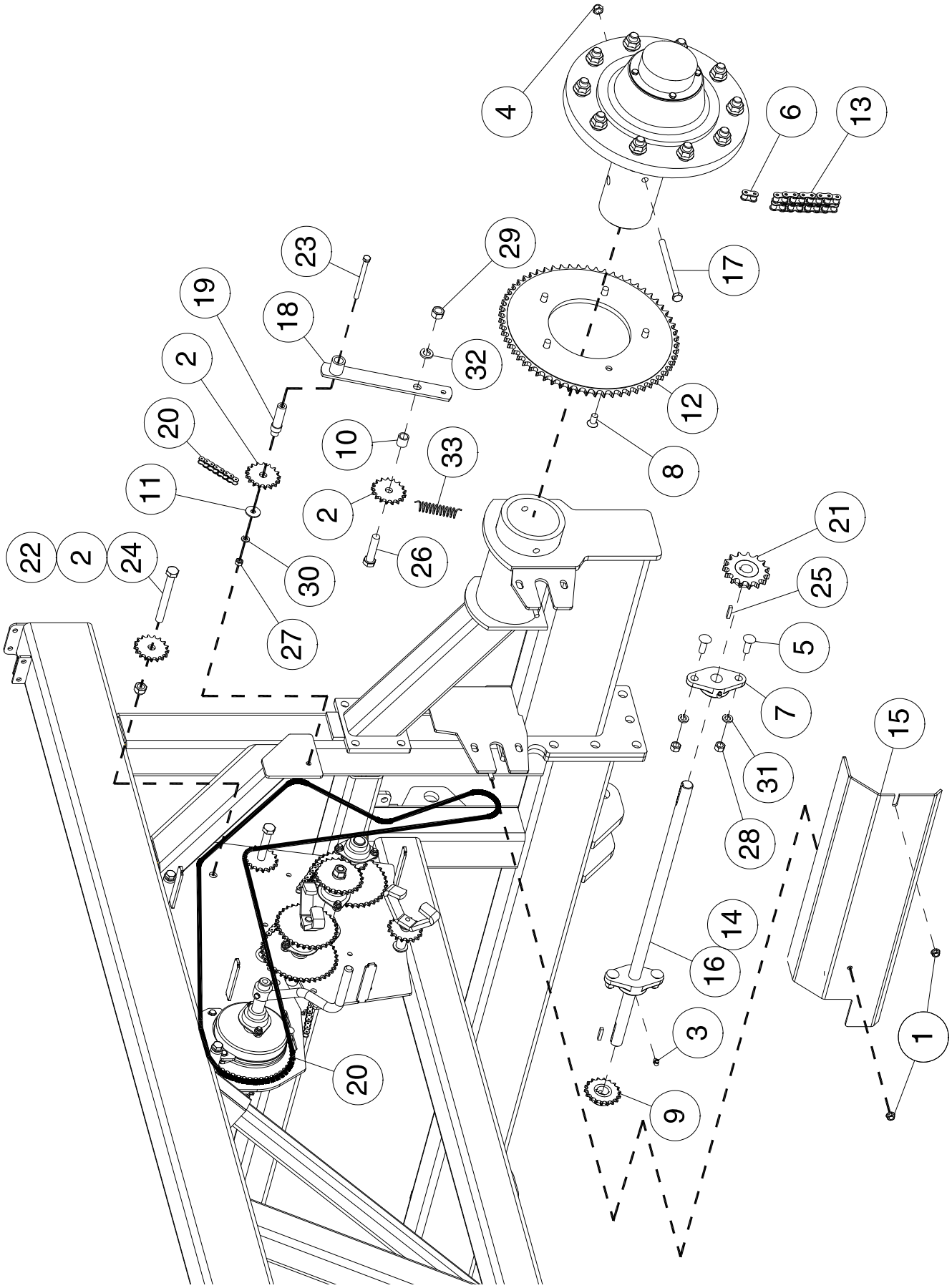

Jack Shaft - 9445, 9550, 9650 - Tow Behind - Prior to 2016

Item	Part No.	Description	Qty
1	D-5279	Lock Nut - 3/8 Serrated Flange	2
2	D17808	Sprocket Idler - 40A17	3
3	F-3056	Grease Zerk - 1/4 90 Degree	2
4	F-3405	Locknut - 1/2 Unitorque	1
5	H-4584	Carriage Bolt - 1/2 x 1 1/2 Lg	4
6	N19221	Chain Connector #60	1
7	N19224	Bearing - 1 Bore - 2 Bolt Flushmount	2
8	N19230	Hex Socket Cap Screw - 1/2	5
9	N19237	Sprocket - 40B18	1
10	N19577	Bushing - 7/8 OD x .657 ID x 7/8 Lg	2
11	N19706	Flatwasher - 3/8	1
12	N32866	Sprocket - 60A63 - 7 Dia Bore	1
13	N32997	Chain #60 x 63 Link W/Connector	1
14	N36039	Jackshaft Assembly - (Includes Items 3, 7, 9, 16, 21 & 25)	1
15	N36342	Guard - Jackshaft	1
	N45070	Guard - Jackshaft - 31 3/4 Lg - 520 Dual Tire Option	
	N50362	Guard - Jackshaft - 43 5/8 Lg - 800 Dual Tire Option	
16	N36998	Jackshaft - 30 3/4 Lg	1
17	N37301	Hex Bolt - 1/2 x 6 1/2 Lg	1
18	N44587	Idler Link	1
19	N44589	Bushing - .875 Dia x 3 21/64 Lg	1
20	N44664	Chain - #40 x 232 Link With Connector	1
21	N47415	Sprocket - 60B15	1
22	S-1197	Locknut - 5/8 Unitorque	1
23	S-1299	Hex Bolt - 3/8 x 4 1/2 Lg	1
24	S-1344	Hex Bolt - 5/8 x 5 1/2 Lg	1
25	S10730	Key - 1/4 x 1/4 x 1 1/4 Lg	2
26	W-502	Hex Bolt - 5/8 x 2 3/4 Lg	1
27	W-514	Hex Nut - 3/8	1
28	W-516	Hex Nut - 1/2	4
29	W-517	Hex Nut - 5/8	1
30	W-523	Lockwasher - 3/8	1
31	W-525	Lockwasher - 1/2	4
32	W-526	Lockwasher - 5/8	1
33	W-1663	Adjusting Spring	1

Jack Shaft
9445, 9550 & 9650 - Tow Between - Proir to 2016

9650 Shown

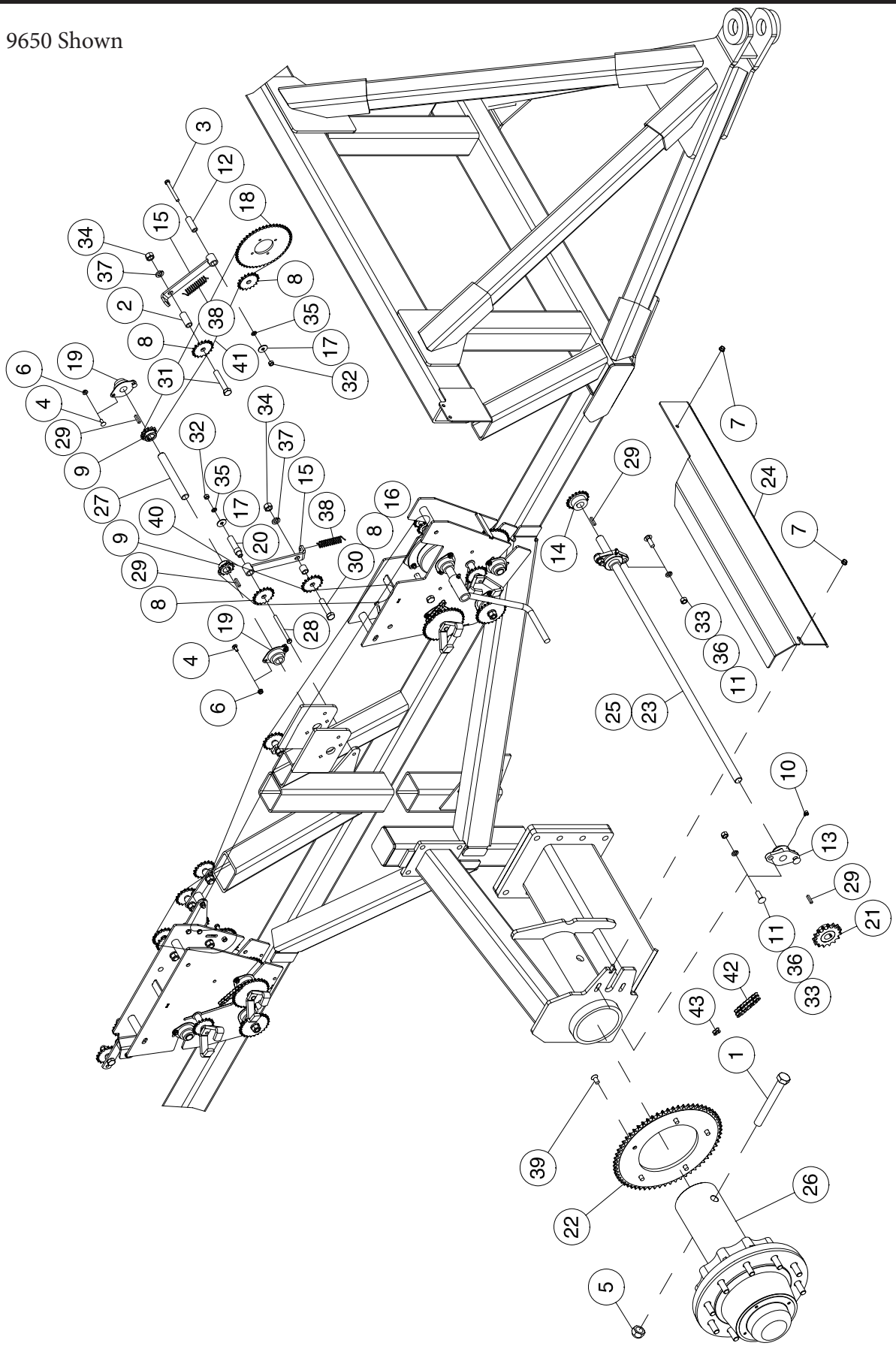

Jack Shaft - 9445, 9550 & 9650 - Tow Between - Proir to 2016

Item	Part No.	Description	Qty
1	C18597	Hex Bolt - 1 x 8 Lg	1
	N49643	Hex Bolt - 1 x 9 Lg - 9800	1
2	C26710	Bushing - 0.657 ID x 7/8 OD x 2 Lg	1
3	D-5249	Hex Bolt - 3/8 x 3 1/4 Lg	1
4	D-5259	Carriage Bolt - 5/16 x 3/4 Lg	4
5	D-5274	Locknut - 1 Unitorque	1
6	D-5278	Locknut - 5/16 Serrated Flange	4
7	D-5279	Locknut - 3/8 Serrated Flange	2
8	D17808	Sprocket Idler - 40A17 W/5/8 Bore	4
9	D17946	Sprocket - 40B12 1.002 Dia Bore	2
10	F-3056	Grease Zerk - 1/4 x 90 Degree	2
11	H-4584	Carriage Bolt - 1/2 x 1 1/2 Lg	4
12	N16156	Spacer - 0.482 ID x 3/4 OD x 2 1/8 Lg	1
13	N19224	Bearing - 1 Bore - 2 bolt Flushmount	2
	N19224	Bearing - 1 Bore - 2 bolt Flushmount - 9800	3
14	N19237	Sprocket - 40B18	1
15	N19261	Idler Arm	2
16	N19577	Bushing - 0.657 ID x 7/8 OD x 7/8 Lg	1
17	N19706	Washer - 13/32 ID x 1 1/4 OD	2
18	N27410	Sprocket - 40A48 - W/2.645 Bore	1
19	N53889	Flangette Bearing - 1 Bore	2
20	N44589	Bushing - 0.406ID x 0.625 OD x 0.75 OD x 3 5/16 Lg	1
21	N47415	Sprocket - 60B15	1
22	N48075	Sprocket - 60A63 - 8.563 Dia Bore - 9445, 950 & 9650	1
23	N48900	Jackshaft Assembly - 44 7/8 Lg (Includes Items 10, 13, 14, 21, 25, 29)	1
24	N48949	Guard - Jackshaft	1
25	N48950	Jackshaft - 44 3/4 Lg	1
26	N49465	Drive Hub Assembly - Includes Items N49595, N48075, N19230	1
	N49595	Hub and Spindle Assembly - 30000 Lb	1
27	N49658	Shaft-Slow Speed - 1 Dia	1
28	S-1299	Hex Bolt - 3/8 x 4 1/2 Lg	1
29	S10730	Key - 1/4 x 1/4 x 1 1/4 Lg	4
30	W-502	Hex Bolt - 5/8 x 2 3/4 Lg	1
31	W-503	Hex Bolt - 5/8 x 3 1/2 Lg	1
32	W-514	Hex Nut - 3/8	2
33	W-516	Hex Nut - 1/2	4
34	W-517	Hex Nut - 5/8	2
35	W-523	Lockwasher - 3/8	2
36	W-525	Lockwasher - 1/2	4
37	W-526	Lockwasher - 5/8	4
38	W-1663	Spring - 23/32 OD x 7 9/16 Lg	2
39	N19230	Hex Socket Cap Screw - 1/2 x 1 Lg	5
40	N16860	Chain - #40 x 129 Link W/Connector	1
41	N16861	Chain - #40 x 147 Link W/Connector	1
		S10954 - Connector #40 Chain S10955 - Offset Connector #40 Chain (Not Shown)	
42	N32997	Chain - #60 x 63 Link W/Connector	1
	N51739	Chain - Roller #60 x 8 Links	8
43	N19221	Chain Connector #60	1

Jackshaft
9445, 9550 & 9650 - Tow Between and Tow Behind - Duals
9800 - Tow Between and Tow Behind - Forward Axle Location

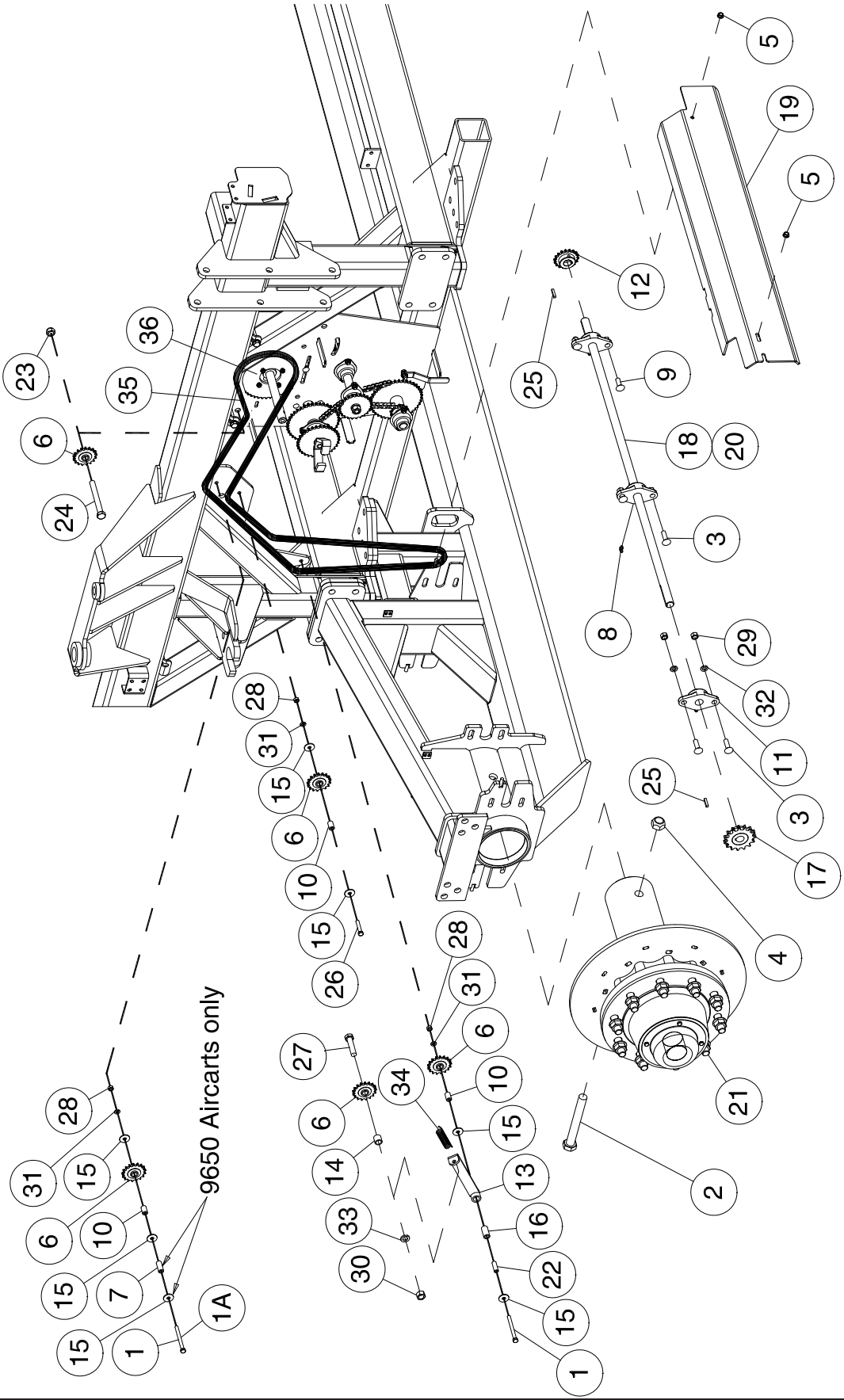

Jackshaft
9445, 9550 & 9650 - Tow Between and Tow Behind - Duals
9800 - Tow Between and Tow Behind - Forward Axle Location

Item	Part No.	Description	Qty
1	C-1550	Hex Bolt - 3/8 x 4 Lg - 9650 Air Cart only	2
1A	W-478	Hex Bolt - 3/8 x 2 Lg - 9800 Air Cart only	1
2	C18597	Hex Bolt - 1 x 8 Lg	1
3	D-5267	Carriage Bolt - 1/2 x 1 3/4 Lg	4
4	D-5274	Locknut - 1 Unitorque	1
5	D-5279	Flange Lock Nut - 3/8 Serrated	3
6	D17808	Sprocket Idler - 40A17	6
7	D17958	Bushing - 0.385 ID x 5/8 OD x 1 1/2 Lg	1
8	F-3056	Grease Zerk - 1/4	3
9	H-4584	Carriage Bolt - 1/2 x 1 1/2 Lg	2
10	N15559	Bushing - 0.385 ID x 5/8 OD x 1 Lg	3
11	N19224	Bearing	3
12	N19237	Sprocket - 40B18	1
13	N19261	Idler Arm	1
14	N19577	Bushing - 7/8 OD x .657 ID x 7/8 Lg	2
15	N19706	Washer - 13/32 ID x 1 1/4 OD x 0.100	8
16	N36900	Bushing - 0.510 ID x 3/4 OD x 1 1/2 Lg	1
17	N47415	Sprocket - 60B15	1
18	N51700	Jackshaft Assembly - 49 1/4 Lg (Includes Items 7, 10, 11, 17, 18, 25)	1
	N51700	Jackshaft Assembly - 49 1/4 Lg - 9800 prior to 2016	
	N55550	Jackshaft Assembly - 55 1/4LG	
	N60360	Jackshaft Assembly - 51 3/4LG - 9800 Current	
19	N51701	Guard - Jackshaft - 47 1/2 Lg - 9445, 9550 & 9650	1
	N51731	Guard - Jackshaft - 47 1/2 Lg - 9800 prior to 2016	
	N55553	Guard - Jackshaft - 53 1/2 Lg	
	N60362	Guard - Jackshaft - 50 Lg - 9800 Current	
20	N51800	Jackshaft - 49 1/4 Lg - 9445, 9550 & 9650	1
	N51800	Jackshaft - 49 1/4 Lg - 9800 prior to 2016	
	N55551	Jackshaft - 55 1/4 Lg	
	N72339	Jackshaft - 51 3/4 Lg - 9800 Current	
21	* * * * * *	Hub Assembly - See Section 6	
22	N58668	Bushing - 0.385 ID x 1/2 OD x 1 1/2 Lg	1
23	S-1197	Locknut - 5/8 Unitorque	1
24	S-1344	Hex Bolt - 5/8 x 5 1/2 Lg	1
25	S10730	Key - 1/4 x 1/4 x 1 1/4 Lg	2
26	W-478	Hex Bolt - 3/8 x 2 Lg	1
27	W-502	Hex Bolt - 5/8 x 2 3/4 Lg	1
28	W-514	Hex Nut - 3/8	4
29	W-516	Hex Nut - 1/2	6
30	W-517	Hex Nut - 5/8	4
31	W-523	Lockwasher - 3/8	4
32	W-525	Lockwasher - 1/2	6
33	W-526	Lockwasher - 5/8	1
34	W-1663	Adjusting Spring	1
35	N59986	Chain - Roller #40 x 254 Link - W/Connector - 9650 Air Cart	1
	N55810	Chain - Roller #40 x 242 Link - W/Connector - 9800 Air Cart	1
		S10954 - Connector #40 Chain S10955 - Offset Connector #40 Chain (Not Shown)	
36	N27410	Sprocket 40A48	1

Jackshaft
9445, 9550 & 9650 - Tow Behind - Single 900 Tire
9800 and 91000 - Rear Axle Location

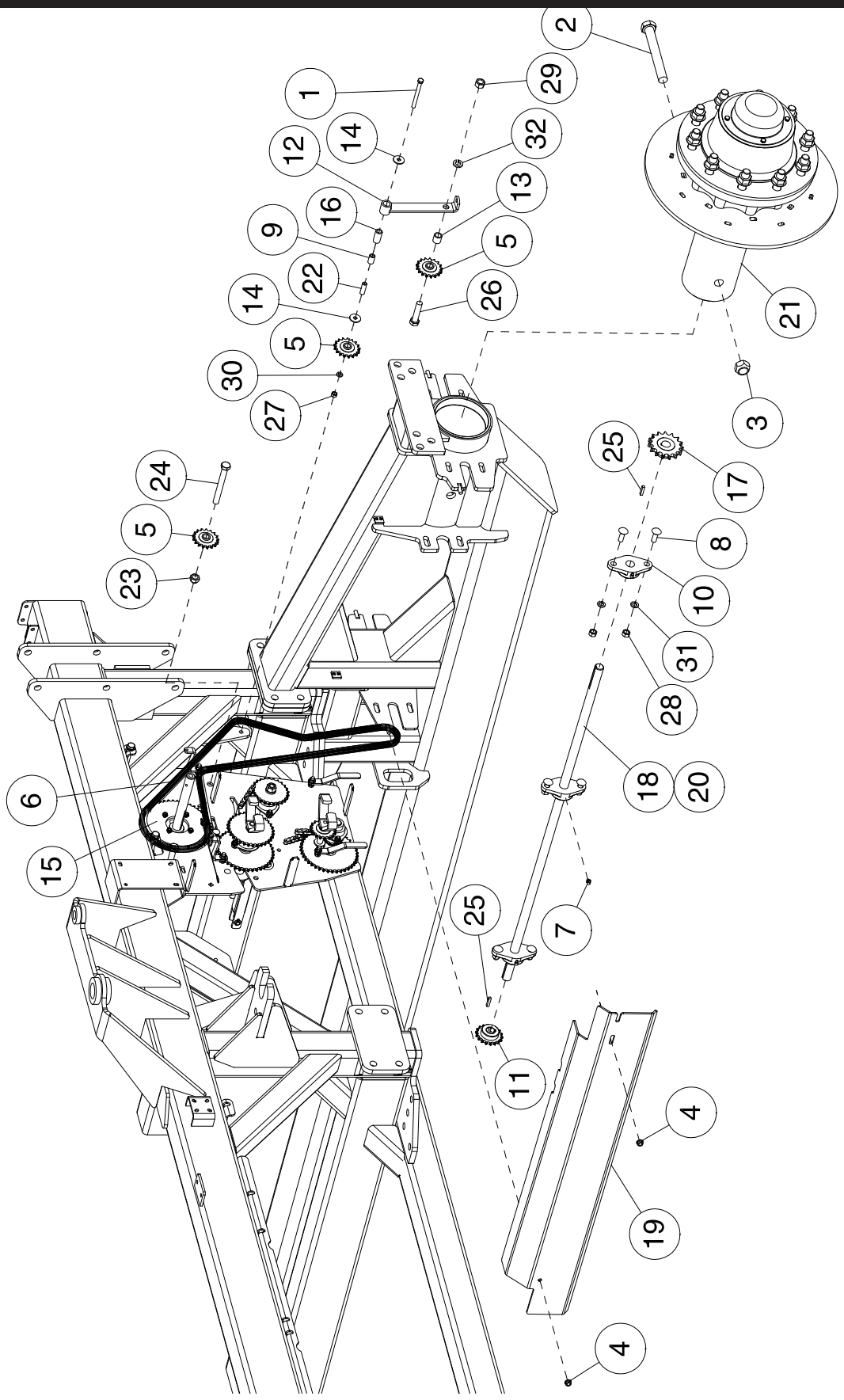

Jackshaft
9445, 9550 & 9650 - Tow Behind - Single 900 Tire
9800 and 91000 - Rear Axle Location

Item	Part No.	Description	Qty
1	C-1550	Hex Bolt - 3/8 x 4 Lg	1
2	C18597	Hex Bolt - 1 x 8 Lg	1
3	D-5274	Locknut - 1” Unitorque	1
4	D-5279	Flange Lock Nut - 3/8 Serrated	6
5	D17808	Sprocket Idler - 40A17	6
6	N16861	Chain - Roller #40 x 174 Link - W/Connector	1
		S10954 - Connector #40 Chain S10955 - Offset Connector #40 Chain (Not Shown)	
7	F-3056	Grease Zerk - 1/4	3
8	H-4584	Carriage Bolt - 1/2 x 1 1/2 Lg	6
9	N15559	Bushing - 0.385 ID x 5/8 OD x 1 Lg	1
10	N19224	Bearing	3
11	N19237	Sprocket - 40B18	1
12	N19261	Idler Arm	1
13	N19577	Bushing - 0.657 ID x 7/8 OD x 7/8 Lg	2
14	N19706	Washer-13/32 ID x 1 1/4 OD x.100	5
15	N27410	Sprocket - 40A48	1
16	N36900	Bushing - 0.510 ID x 3/4 OD x 1 1/2 Lg	1
17	N47415	Sprocket - 60B15	1
18	N51700	Jackshaft Assembly - 49 1/4 Lg (Includes Items 7, 10, 11, 17, 18, 25)	1
	N55550	Jackshaft Assembly - 55 1/4Lg	
	N60360	Jackshaft Assembly - 51 3/4 Lg - 9800 and 91000 Current	
	N60975	Jackshaft Assembly - 22 11/116 Lg - 9650 Narrow Transport	
19	N51701	Guard - Jackshaft - 47 1/2 Lg - 9445, 9550 & 9650	1
	N51701	Guard - Jackshaft - 47 1/2 Lg - 9800 prior to 2016	
	N55552	Guard - Jackshaft - 53 1/2 Lg - 91000 prior to 2016	
	N60362	Guard - Jackshaft - 50 Lg - 9800 and 91000 Current	
	N60976	Guard - Jackshaft - 17 Lg - 9650 Narrow Transport	
20	N51800	Jackshaft - 49 1/4 Lg - 9445, 9550 & 9650	1
	N51800	Jackshaft - 49 1/4 Lg - 9800 prior to 2016	
	N55551	Jackshaft - 55 1/4 Lg - 91000 prior to 2016	
	N72339	Jackshaft - 51 3/4 Lg - 9800 and 91000 Current	
	N60974	Jackshaft - 23 Lg - 9650 Narrow Transport	
21	* * * * * *	Hub Assembly - See Section 6	
22	N58668	Bushing - 0.385 ID x 0.500 OD x 1 1/2 Lg	1
23	S-1197	Locknut - 5/8 Unitorque	2
24	S-1344	Hex Bolt - 5/8 x 5 1/2 Lg	2
25	S10730	Key - 1/4 x 1/4 x 1 1/4 Lg	2
26	W-502	Hex Bolt - 5/8 x 2 3/4 Lg	1
27	W-514	Hex Nut - 3/8	2
28	W-516	Hex Nut - 1/2	6
29	W-517	Hex Nut - 5/8	4
30	W-523	Lockwasher - 3/8	2
31	W-525	Lockwasher - 1/2	6
32	W-526	Lockwasher - 5/8	1
33	D-5267	Carriage Bolt - 1/2 x 1 3/4 Lg	2

9365,9450 and 9535

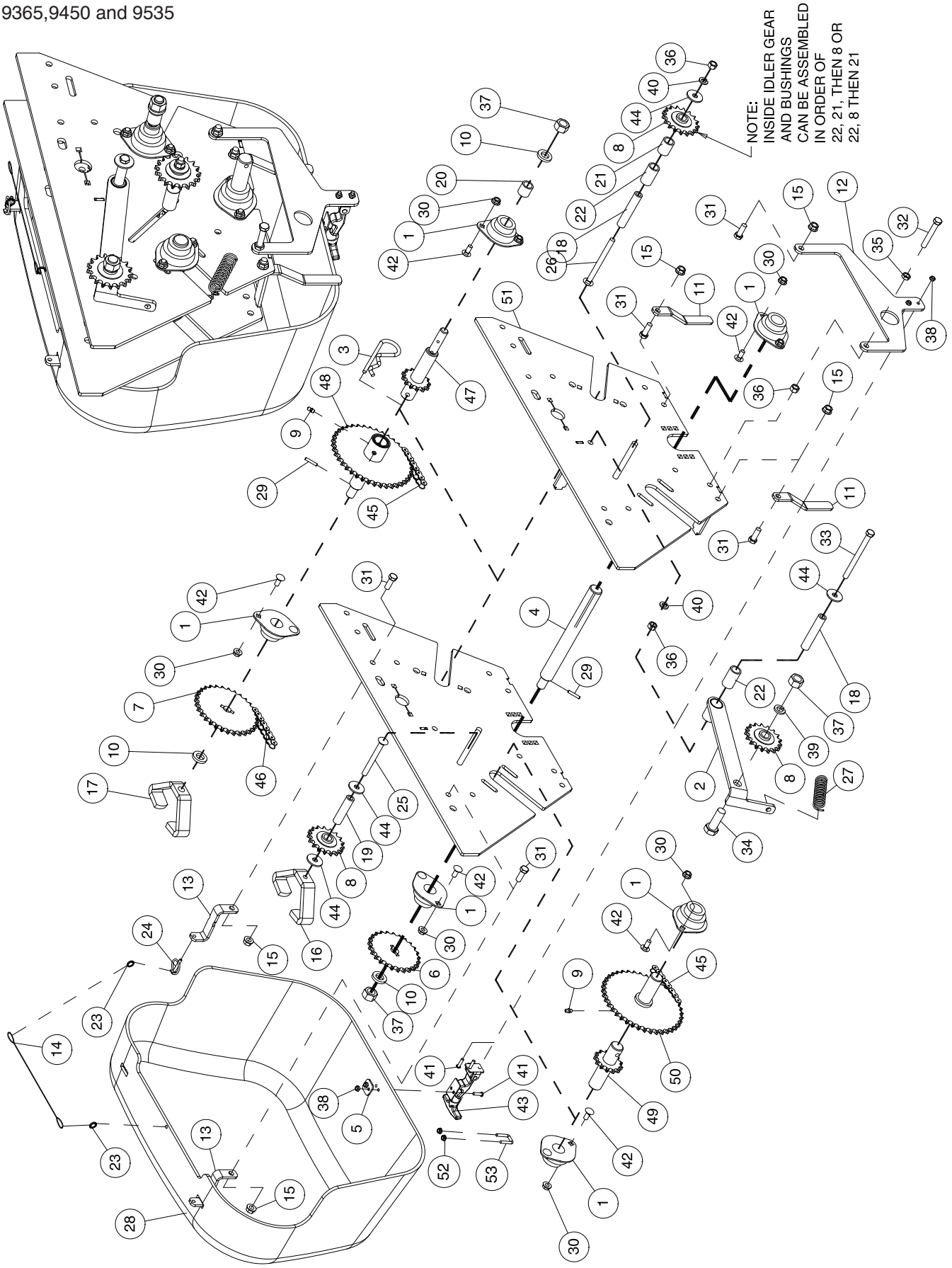

Transmission - Small Frame Standard Drive

Item	Part No.	Description	Qty
1	N53889	Flangette Bearing 1” Bore	6
2	N50847	Tensioner	1
3	P1318510	Hairpin - #19	1
4	N36206	Shaft - Meter End	1
5	N50678	Brace Plate	1
6	N27425	Sprocket - 40A25 - (P-Drive)	1
7	N27431	Sprocket - 40A31 - (P-Drive)	1
8	D17808	Sprocket Idler	3
9	S-752	Grease Fitting - 1/4	2
10	W-793	Washer - 5/8 ID x 1 1/8 OD x 3/16	3
11	N50656	Cover Stop	2
12	N50677	Mount Plate (prior to 2017)	1
	N62361	Mount Plate	1
13	N51201	Upper Bracket	2
14	N51998	Lanyard - 8” Lg	1
15	D-5279	Flange Lock Nut - 3/8 Serrated	5
16	N27350	Wing-Lock Nut - 3/8	1
17	N27370	Wing-Lock Nut - 5/8	1
18	N50842	Bushing - .385 ID x 5/8 OD x 3 1/4 Lg	2
19	N50951	Bushing - .385 ID x 5/8 OD x 2 1/2 Lg	1
20	N19577	Bushing - .657 ID x 7/8 OD x 7/8 Lg	1
21	N29200	Bushing - .657 ID x 7/8 OD x 1 1/8 Lg	1
22	N50843	Bushing - .657 ID x 7/8 OD x 1 9/16 Lg	2
23	N51996	Split Ring - 9/16 Dia	2
24	S42294	Lynch Pin - 3/16 Dia x 1 1/4 Lg	1
25	N19283	Carriage Bolt - 3/8 x 3 1/2 Lg	1
26	N37219	Carriage Bolt - 3/8 x 4 1/2 Lg	1
27	W-1663	Adjusting Spring	1
28	N50932	Chain Guard - Main SD (Prior to 2017)	1
	N62003	Chain Guard - Main SD (2017 to Present)	1
29	N27395	Drive Pin - 3/16 Dia x 1 Lg	2
30	D-5278	Lock Nut - 5/16 Serrated Flanged	12
31	W-475	Hex Bolt - 3/8 x 1 Lg	5
32	W-480	Hex Bolt - 3/8 x 2 1/2 Lg	1
33	S-1299	Hex Bolt - 3/8 x 4 1/2 Lg	1
34	W-498	Hex Bolt - 5/8 x 1 3/4 Lg	1
35	S-748	Hex Jam Nut - 3/16	1
36	W-514	Hex Nut - 3/8	3
37	W-517	Hex Nut - 5/8	3
38	N37787	Locknut - #10-24 Nylon Insert	4
39	W-525	Lockwasher - 1/2	1
40	W-523	Lockwasher - 3/8	2
41	N34961	Machine Screw - #10-24 x 3/4	4
42	D-5259	Carriage Bolt - 5/16 x 3/4 Lg	12
43	N50691	Rubber Draw Latch	1
44	N19706	Washer - .406 ID x 1 1/4 OD x .100	4
45	N16113	Chain-#40 x 69 Links With Conn And Offset	2
46	N19258	Chain - #40 x 64 Link With Connector	1
		S10954 - Connector #40 Chain S10955 - Offset Connector #40 Chain (Not Shown)	
47	N27403	Shaft - Slow Speed - 40A13 x 7 Lg	1
48	N27404	Shaft - Slow Speed - 40A40 x 5 13/16 Lg (N16853 Oillite Bushing)	1
49	N27405	Shaft - Reducer - 40A13 x 4 1/4 Lg	1
50	N27406	Shaft - Reducer - 40A40 x 4 3/8 Lg (N16853 Oillite Bushing)	1
51	N51219	Transmission Weldment	1
52	D-5277	Locknut - 1/4 Serrated	2
53	N21055	U-Bolt - 1/4 Dia x 3/4 x 1 3/8 UL	1
	N50840	Transmission Assembly - (Includes all above items)	

9365,9450 and 9535

N51256 Transmission Assembly - (Includes all items)

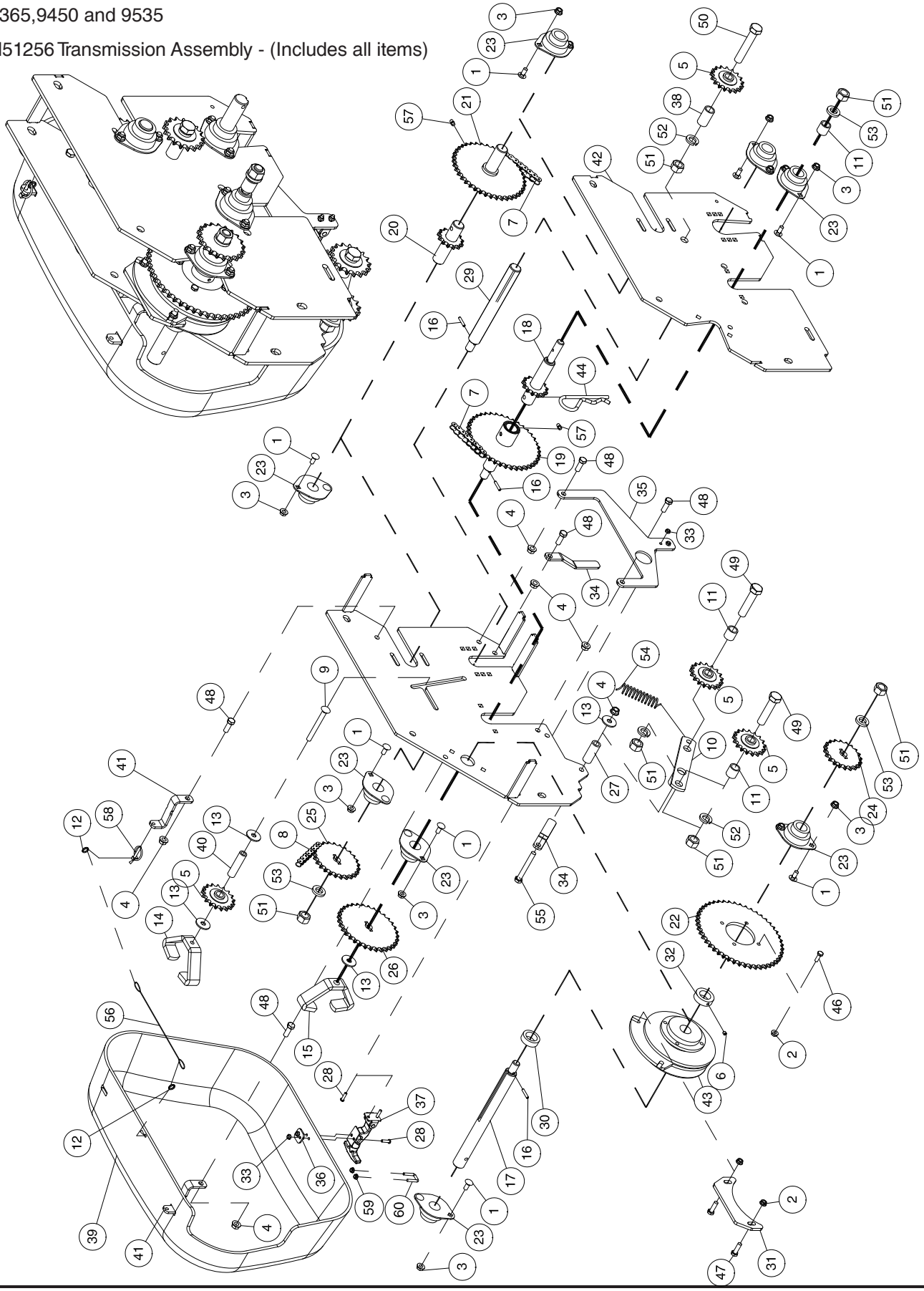

Transmission - Small Frame Standard Drive Rear

Item	Part No.	Description	Qty
1	D-5259	Carriage Bolt - 5/16 x 3/4 Lg	16
2	D-5277	Flange Lock Nut - 1/4	6
3	D-5278	Lock Nut - 5/16 Serrated Flanged	16
4	D-5279	Flange Lock Nut - 3/8	6
5	D17808	Sprocket Idler	4
6	K25314	Set Screw - 1/4 x 1/4 Lg	1
7	N16969	Chain - #40 x 60 Link W/Connect	2
8	N19258	Chain - #40 x 64 Link With Connector	1
		S10954 - Connector #40 Chain S10955 - Offset Connector #40 Chain (Not Shown)	
9	N19283	Carriage Bolt - 3/8 x 3 1/2 Lg	1
10	N19288	Idler Arm	1
11	N19577	Bushing - 0.657 ID x 7/8 OD x 7/8 Lg	3
12	N51996	Split Ring - 9/16 Dia	2
13	N19706	Washer - 13/32 ID x 1 1/4 OD x .100	4
14	N27350	Wing-Lock Nut - 3/8	1
15	N27370	Wing-Lock Nut - 5/8	1
16	N27395	Drive Pin - 3/16 x 1 Lg	3
17	N27400	Clutch Shaft	1
18	N27403	Shaft - Slow Speed 13T x 7 Lg	1
19	N27404	Shaft - Slow Speed 40T x 5 13/16 Lg (N16853 Oillite Bushing)	1
20	N27405	Shaft - Reducer 13T x 4 1/4 Lg (N16853 Oillite Bushing)	1
21	N27406	Shaft - Reducer 40T x 4 3/8 Lg	1
22	N27410	Sprocket - 40A48 - W/2.645 Bore	1
23	N53889	Flangette Bearing 1” Bore	8
24	N27412	Sprocket - 40A12 - (P-Drive) - 7 1/2 opener spacing	1
	N27413	Sprocket - 40A13 - (P-Drive) - 8 opener spacing	1
	N27415	Sprocket - 40A15 - (P-Drive) - 9 opener spacing	1
	N27417	Sprocket - 40A17 - (P-Drive) - 10 opener spacing	1
	N27420	Sprocket - 40A20 - (P-Drive) - 12 opener spacing	1
25	N27425	Sprocket - 40A25 - (P-Drive)	1
26	N27433	Sprocket - 40A33 - (P-Drive)	1
27	N31066	Spacer - 0.482 ID x 3/4 OD x 1 15/16 Lg	1
28	N34961	Machine Screw - #10-24 x 3/4 Lg	4
29	N36206	Shaft - Meter End	1
30	N37216	Spacer Bushing - 1 1/32 ID x 1 1/2 OD x 0.484 Lg	1
31	N59991	Bracket - Clutch Locking (N37233 Prior to 2016)	1
32	N37319	Clutch Retainer Bushing - 1 5/8 Dia	1
33	N37787	Locknut - #10-24 Nylon Insert	4
34	N50656	Cover Stop	2
35	N50677	Mount Plate (Prior to, 2017)	1
	N62361	Mount Plate (2017 to Present)	1
36	N50678	Brace Plate	1
37	N50691	Rubber Draw Latch	1
38	N50843	Bushing- 0.657 ID x 7/8 OD x 1 9/16 Lg	1
39	N50933	Rear SD Chain Guard (Prior to 2017)	1
	N62002	Rear SD Chain Guard (2017 to Present)	1
40	N50951	Bushing - 0.385 ID x 5/8 OD x 2 1/2 Lg	1
41	N51201	Upper Bracket	2
42	N55484	Transmission Weldment	1
43	N51260	Clutch - Main (200 Ft-Lb)	1
44	P1318510	Hairpin - #19	1
46	W-469	Hex Head - 1/4 x 3/4 Lg	4
47	W-471	Hex Bolt - 5/16 x 1 Lg	2
48	W-475	Hex Bolt - 3/8 x 1 Lg	5
49	W-502	Hex Bolt - 5/8 x 2 3/4 Lg	2
50	W-503	Hex Bolt - 5/8 x 3 1/2 Lg	1
51	W-517	Hex Nut - 5/8	6
52	W-526	Lockwasher - 5/8	3
53	W-793	Washer - 3/16	3
54	W-1663	Adjusting Spring	1
55	W-1854	Hex Bolt - 3/8 x 3 Lg	1
56	N51998	Lanyard - 3/64 Dia x 8 Lg	1
57	S-752	Grease Fitting - 1/4	2
58	S42294	Lynch Pin - 3/16 Dia x 1 1/4 Lg	1
59	D-5277	Locknut - 1/4 Serrated	2
60	N21055	U-Bolt - 1/4 x 3/4 x 1 3/8 UL	1

9445,9550 and 9650
9800 and 91000

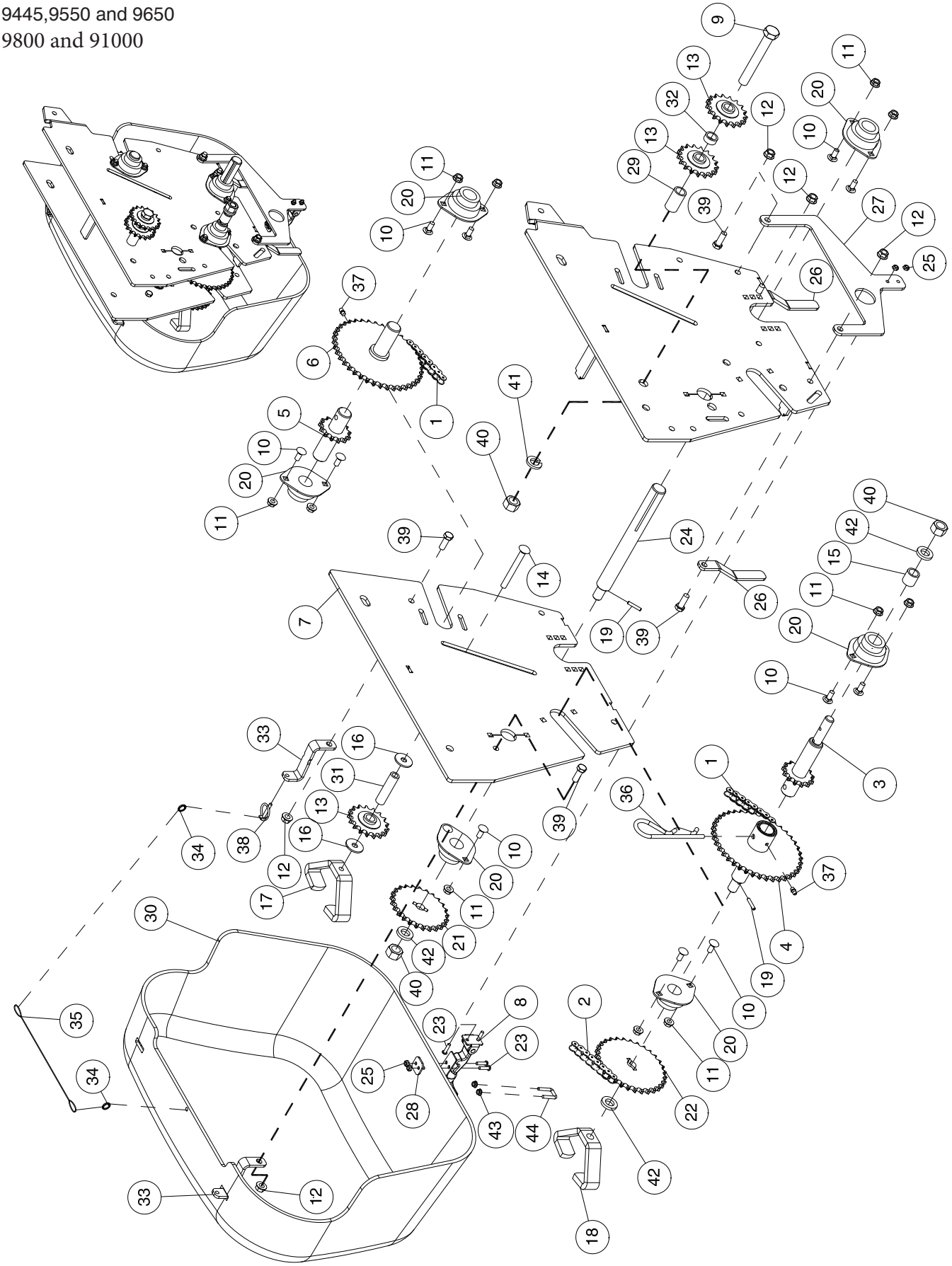

Transmission - Large Frame Standard Drive

Item	Part No.	Description	Qty
1	N16113	Chain-#40-69 Links With Conn And Offset	2
2	N19258	Chain - #40 x 64 Link With Connector	1
		S10954 - Connector #40 Chain S10955 - Offset Connector #40 Chain (Not Shown)	
3	N27403	Shaft - Slow Speed 13T x 7 Lg	1
4	N27404	Shaft - Slow Speed 40T x 5 13/16 Lg (N16853 Oillite Bushing)	1
5	N27405	Shaft - Reducer 13T x 4 1/4 Lg	1
6	N27406	Shaft - Reducer 40T x 4 3/8 Lg (N16853 Oillite Bushing)	1
7	N50665	Transmission Weldment	1
8	N50691	Rubber Draw Latch	1
9	C-852	Hex Bolt - 5/8 x 4 1/2 Lg	1
10	D-5259	Carriage Bolt - 5/16 x 3/4 Lg	12
11	D-5278	Lock Nut - 5/16 Serrated Flanged	12
12	D-5279	Lock Nut - 3/8 Serrated Flanged	5
13	D17808	Sprocket Idler - 40A17 - W/5/8 Bore	3
14	N19283	Carriage Bolt - 3/8 x 3 1/2Lg	1
15	N19577	Bushing - 0.657 ID x 7/8 OD x 7/8 Lg	1
16	N19706	Washer - 13/32 ID x 1 1/4 OD x .100	2
17	N27350	Wing-Lock Nut - 3/8	1
18	N27370	Wing-Lock Nut - 5/8	1
19	N27395	Drive Pin - 3/16 Dia x 1 Lg	2
20	N53889	Flangette Bearing 1” Bore	6
21	N27425	Sprocket - 40A25 - (P-Drive)	1
22	N27431	Sprocket - 40A31 - (P-Drive)	1
23	N34961	Machine Screw - #10-24 x 3/4	4
24	N36206	Shaft - Meter End	1
25	N37787	Locknut - #10-24 Nylon Insert	4
26	N50656	Cover Stop	2
27	N50677	Mount Plate (Prior ro 2017)	1
	N62361	Mount Plate (2017 to Present)	1
28	N50678	Brace Plate	1
29	N50843	Bushing - 0.657 ID x 7/8 OD x 1 9/16 Lg	1
30	N50932	Main SD Chain Guard (Prior to 2017)	1
	N62003	Main SD Chian Guard (2017 to Present)	1
31	N50951	Bushing - 0.385 ID x 5/8 OD x 2 1/2 Lg	1
32	N50956	Bushing - 0.657 ID x 7/8 OD x 3/8 Lg	1
33	N51201	Upper Bracket	2
34	N51996	Split Ring	2
35	N51998	Lanyard - 8” Lg	1
36	P1318510	Hairpin - #19	1
37	S-752	Grease Fitting - 1/4	2
38	S42294	Lynch Pin - 3/16 Dia x 1/4 Lg	1
39	W-475	Hex Head Capscrew	5
40	W-517	Hex Nut - 5/8	3
41	W-526	Lockwasher - 5/8	1
42	W-793	Washer - 5/8 ID x 1 1/8 OD x 3/16	3
43	D-5277	Locknut - 1/4 Serrated	2
44	N21055	U-Bolt - 1/4 x 3/4 x 1 3/8 UL	1
	N50955	Transmission Assembly - (Includes all above items)	

9445,9550 and 9650 Tow Behind. **Prior to 2016**

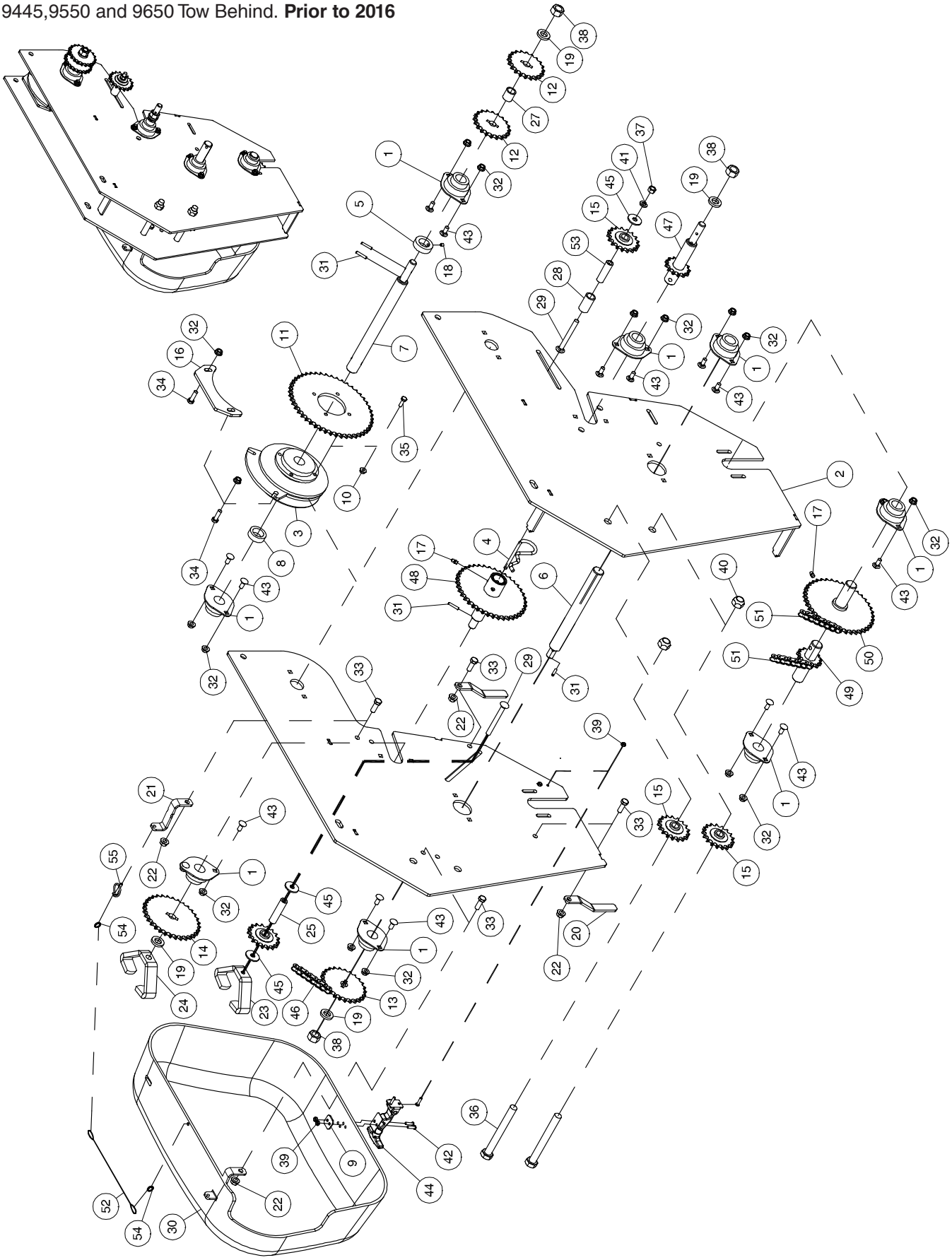

Transmission - Large Frame Behind Standard Drive Rear

Item	Part No.	Description	Qty
1	N53889	Flangette Bearing 1” Bore	8
2	N50660	Transmission Weldment - Rear	1
3	N51260	Clutch (200 Ft-Lb)	1
4	P1318510	Hairpin - #19	1
5	N37319	Clutch Retainer Bushing - 1.005 ID x 1 5/8 OD x 1/2	1
6	N36206	Shaft - Meter End	1
7	N44572	Clutch Shaft	1
8	N37216	Spacer Bushing - 1.031 ID x 1 1/2 OD x 0.484 Lg	1
9	N50678	Brace Plate	1
10	D-5277	Flange Lock Nut - 1/4	4
11	N27410	Sprocket - 40A48 - W/2.645 Bore	1
12	N27412	Sprocket - 40A12 - (P-Drive) - 7 1/2 opener spacing	2
	N27413	Sprocket - 40A13 - (P-Drive) - 8 opener spacing	2
	N27415	Sprocket - 40A15 - (P-Drive) - 9 opener spacing	2
	N27417	Sprocket - 40A17 - (P-Drive) - 10 opener spacing	2
	N27420	Sprocket - 40A20 - (P-Drive) - 12 opener spacing	2
13	N27425	Sprocket - 40A25 - (P-Drive)	1
14	N27432	Sprocket - 40A32 - (P-Drive)	1
15	D17808	Sprocket Idler	4
16	N59991	Bracket - Clutch Locking (N37233 Prior to 2016)	1
17	S-752	Grease Fitting - 1/4	2
18	K25314	Set Screw - 1/4 x 1/4	1
19	W-793	Washer - 5/8 ID x 1 1/8 OD x 3/16	4
20	N50656	Cover Stop	2
21	N51201	Upper Bracket	2
22	D-5279	Lock Nut - 3/8 Serrated Flange	4
23	N27350	Wing-Lock Nut - 3/8	1
24	N27370	Wing-Lock Nut - 5/8	1
25	N50951	Bushing - 5/8 OD x .385 ID x 2 1/2 Lg	1
27	N19577	Bushing - 7/8 OD x .657 ID x 7/8 Lg	1
28	N50843	Bushing - 7/8 OD x .657 ID x 1 9/16 Lg	1
29	N19283	Carriage Bolt - 3/8 x 3 1/2 Lg	2
30	N50933	Chain Guard - Rear	1
31	N27395	Drive Pin - 3/16 Dia x 1 Lg	4
32	D-5278	Lock Nut - 5/16 Serrated Flange	18
33	W-475	Hex Bolt - 3/8 x 1 Lg	4
34	W-471	Hex Bolt - 5/16 x 1 Lg	2
35	W-469	Hex Bolt - 1/4 x 3/4 Lg	4
36	S-1344	Hex Bolt - 5/8 x 5 1/2 Lg	2
37	W-514	Hex Nut - 3/8	1
38	W-517	Hex Nut - 5/8	3
39	N37787	Locknut - #10-24 Nylon Insert	4
40	S-1197	Locknut - 5/8 Unitorque	2
41	W-523	Lockwasher - 3/8	1
42	N34961	Machine Screw - #10-24 x 3/4	4
43	D-5259	Carriage Bolt - 5/16 x 3/4 Lg	16
44	N50691	Rubber Draw Latch	1
45	N19706	Washer - .406 ID x 1 1/4 OD x .100 Thick	3
46	N19258	Chain - #40 x 64 Link With Connector	1
		S10954 - Connector #40 Chain S10955 - Offset Connector #40 Chain (Not Shown)	
47	N27403	Shaft - Slow Speed 13T x 7 Lg	1
48	N27404	Shaft - Slow Speed 40T x 5 13/16 Lg (N16853 Oillite Bushing)	1
49	N27405	Shaft - Reducer 13T x 5 13/16 Lg	1
50	N27406	Shaft - Reducer 40T x 4 3/8 Lg (N16853 Oillite Bushing)	1
51	N48057	Chain - #40 x 81 Link W/Conn & Offset	2
52	N51998	Lanyard - 8” Lg	1
53	N50683	Bushing - 5/8 OD x .385 ID x 2 1/8 Lg	1
54	N51996	Split Ring - 9/16 Dia	2
55	S42294	Lynch Pin - 3/16 Dia x 1 1/4 Lg	1

9445,9550 and 9650 Tow Between. **Prior to 2016**

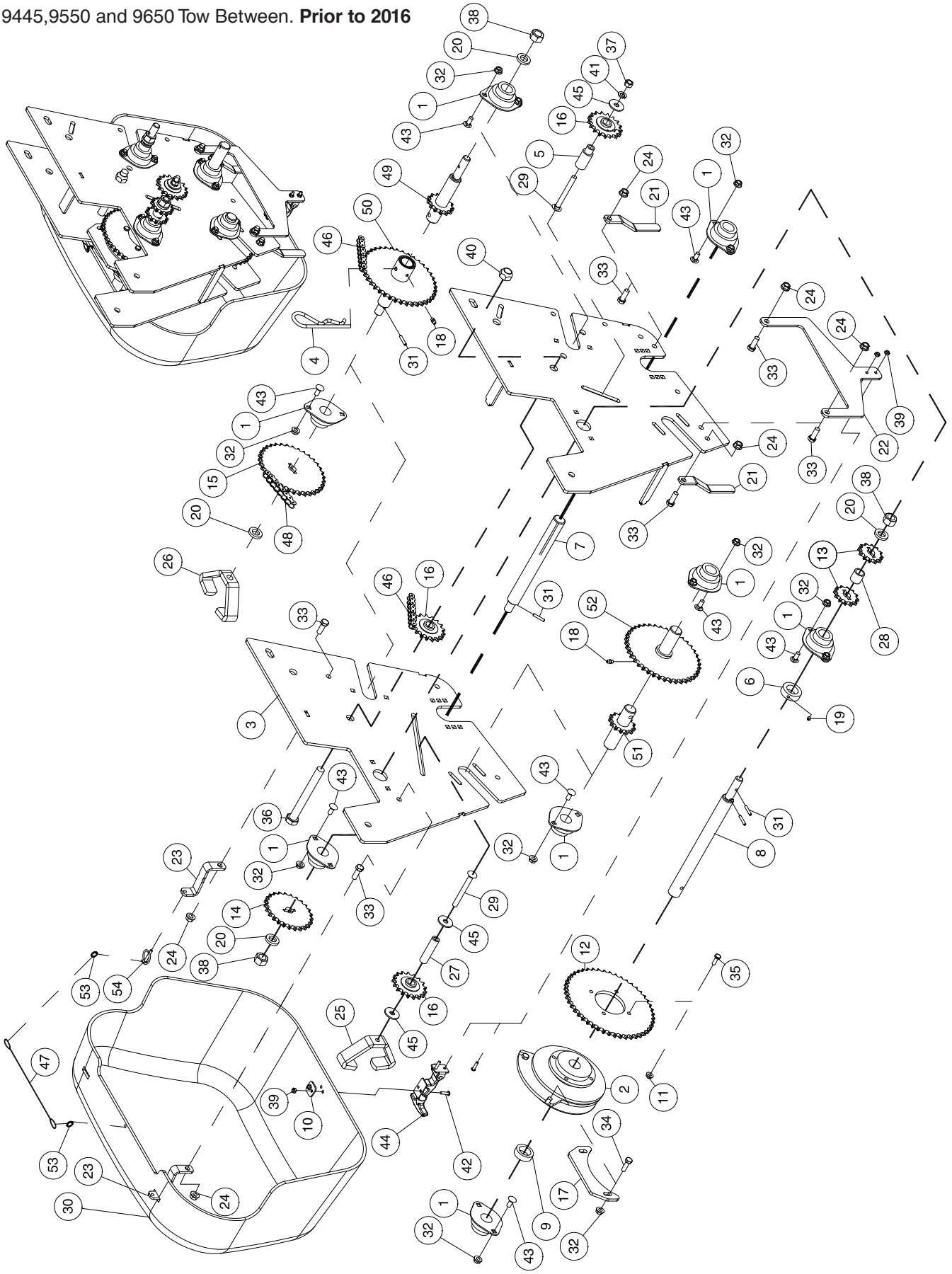

Transmission - Large Frame Between Standard Drive Rear

Item	Part No.	Description	Qty
1	N53889	Flangette Bearing - 1” Bore	8
2	N51260	Clutch (200 Ft-Lb)	1
3	N50659	Transmission Weldment	1
	N50670	Transmission Assembly	
4	P1318510	Hairpin - #19	1
5	N37218	Bushing - .406 ID x 7/8 OD x 2 1/8 Lg	1
6	N37319	Clutch Retainer Bushing - 1.005 ID x 1 5/8 OD x 1/2 Lg	1
7	N36206	Shaft - Meter End	1
8	N44572	Clutch Shaft	1
9	N37216	Spacer Bushing - 1.031 ID x 1 1/2 OD x 0.484 Lg	1
10	N50678	Brace Plate	1
11	D-5277	Lock Nut - 1/4 Flange	4
12	N27410	Sprocket - 40A48 - W/2.645 Bore	1
13	N27412	Sprocket - 40A12 - (P-Drive) - 7 1/2 opener spacing	2
	N27413	Sprocket - 40A13 - (P-Drive) - 8 opener spacing	2
	N27415	Sprocket - 40A15 - (P-Drive) - 9 opener spacing	2
	N27417	Sprocket - 40A17 - (P-Drive) - 10 opener spacing	2
	N27420	Sprocket - 40A20 - (P-Drive) - 12 opener spacing	2
14	N27425	Sprocket - 40A25 - (P-Drive)	1
15	N27435	Sprocket - 40A35 - (P-Drive)	1
16	D17808	Sprocket Idler	3
17	N59991	Bracket - Clutch Locking (N37233 Prior to 2016)	1
18	S-752	Grease Fitting - 1/4	2
19	K25314	Set Screw - 1/4 x 1/4	1
20	W-793	Washer - 5/8 ID x 1 1/8 OD x 3/16 Thick	4
21	N50656	Cover Stop	2
22	N50677	Mount Plate	1
23	N51201	Upper Bracket	2
24	D-5279	Flange Lock Nut - 3/8 Serrated	6
25	N27350	Wing-Lock Nut - 3/8	1
26	N27370	Wing-Lock Nut - 5/8	1
27	N50951	Bushing - 5/8 OD x .385 ID x 2 1/2 Lg	1
28	N19577	Bushing - 7/8 OD x .657 ID x 7/8 Lg	1
29	N19283	Carriage Bolt - 3/8 x 3 1/2 Lg	2
30	N50932	Main Sd Chain Guard	1
31	N27395	Drive Pin - 3/16 Dia x 1 Lg	4
32	D-5278	Lock Nut - 5/16 Serrated Flanged	18
33	W-475	Hex Bolt - 3/8 x 1 Lg	6
34	W-471	Hex Bolt - 5/16 x 1 Lg	2
35	W-469	Hex Bolt - 1/4 x 3/4 Lg	4
36	S-1344	Hex Bolt - 5/8 x 5 1/2 Lg	1
37	W-514	Hex Nut - 3/8	1
38	W-517	Hex Nut - 5/8	3
39	N37787	Locknut - #10-24 Nylon Insert	4
40	S-1197	Locknut - 5/8 Unitorque	1
41	W-523	Lockwasher - 3/8	1
42	N34961	Machine Screw - #10-24 x 3/4	4
43	D-5259	Carriage Bolt - 5/16 x 3/4 Lg	16
44	N50691	Rubber Draw Latch	1
45	N19706	Washer - 0.406 ID x 1 1/4 OD x 0.100 Thick	3
46	N16113	Chain- #40-69 Links With Conn And Offset	2
47	N51998	Lanyard - 8” Lg	1
48	N19258	Chain - #40 x 64 Link With Connector	1
		S10954 - Connector #40 Chain S10955 - Offset Connector #40 Chain (Not Shown)	
49	N27403	Shaft - Slow Speed 13T x 7 Lg	1
50	N27404	Shaft - Slow Speed 40T x 5 13/16 Lg (N16853 Oillite Bushing)	1
51	N27405	Shaft - Reducer 13T x 5 13/16 Lg	1
52	N27406	Shaft - Reducer 40T x 4 3/8 Lg (N16853 Oillite Bushing)	1
53	N51996	Split Ring - 9/16 Dia	2
54	S42294	Lynch Pin - 3/16 Dia x 1 1/4 Lg	1

9445,9550 and 9650 - **2016 to Present**

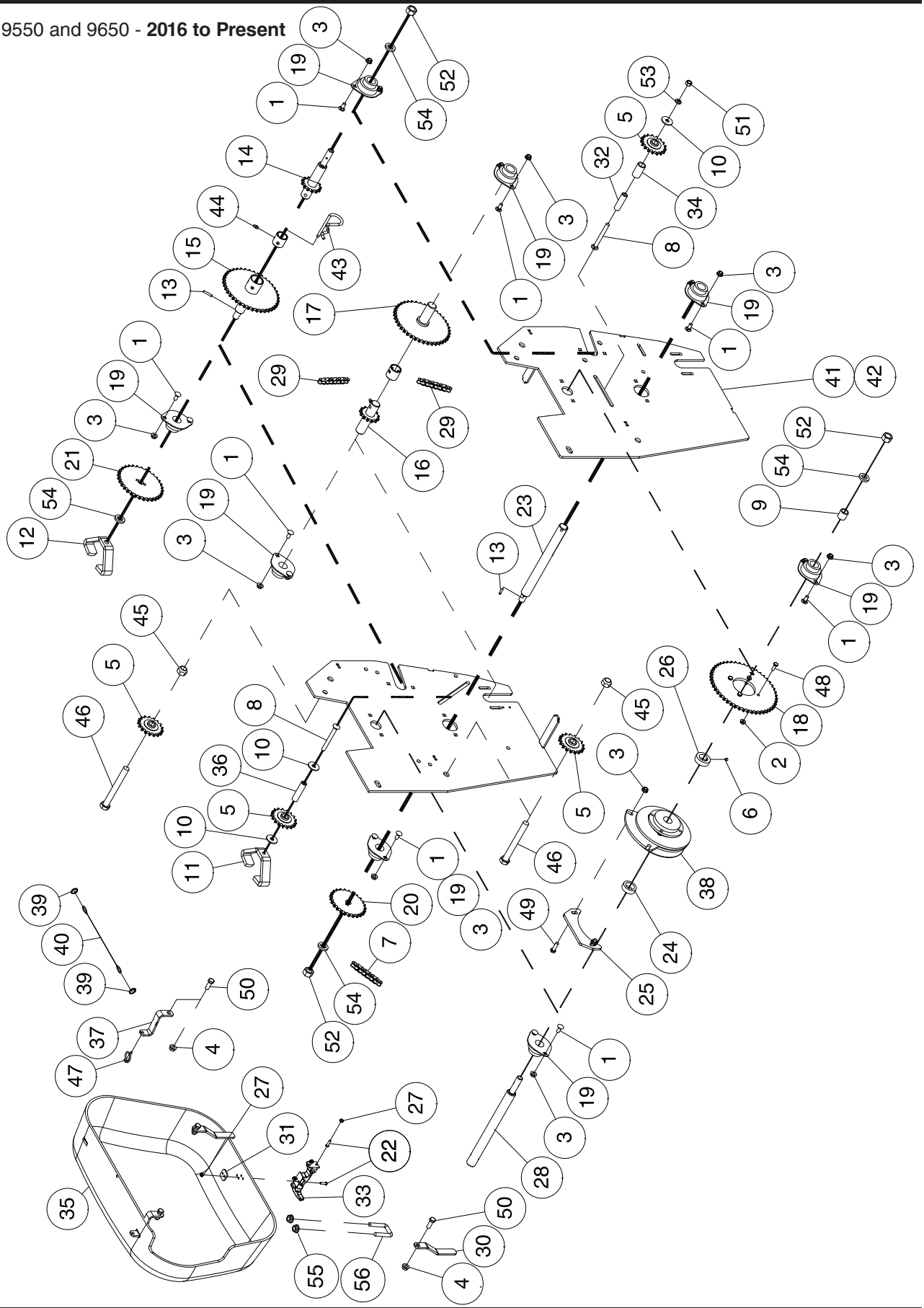

Transmission - Standard Drive Rear - 9800 and 91000

Item	Part No.	Description	Qty
1	D-5259	Carriage Bolt - 5/16 x 3/4 Lg	16
2	D-5277	Lock Nut - 1/4 Serrated Flange	4
3	D-5278	Lock Nut - 5/16 Serrated Flange	18
4	D-5279	Lock Nut - 3/8 Serrated Flange	2
5	D17808	Sprocket Idler - 40A17 - W/5/8 Bore	4
6	K25314	Set Screw - 1/4 x 1/4 Lg	1
7	N19258	Chain - #40 x 64 Link With Connector	1
8	N19283	Carriage Bolt - 3/8 x 3 1/2 Lg	2
9	N19577	Bushing - 7/8 OD x .657 ID x 7/8 Lg	1
10	N19706	Washer - 13/32 ID x 1 1/4 OD x .100	3
11	N27350	Wing-Lock Nut - 3/8	1
12	N27370	Wing-Lock Nut - 5/8	1
13	N27395	Drive Pin - 3/16 x 1 Lg	2
14	N27403	Shaft - Slow Speed 13T x 7 Lg	1
15	N27404	Shaft - Slow Speed 40T x 5 13/16 Lg (N16853 Oillite Bushing)	1
16	N27405	Shaft - Reducer 13T x 5 13/16 Lg	1
17	N27406	Shaft - Reducer 40T x 4 3/8 Lg (N16853 Oillite Bushing)	1
18	N27410	Sprocket - 40A48 - W/2.645 Bore	1
19	N53889	Flangette Bearing - 1 Bore	8
20	N27425	Sprocket - 40A25 - (P-Drive)	1
21	N27432	Sprocket - 40A32 - (P-Drive)	1
22	N34961	Machine Screw - #10-24 x 3/4	4
23	N36206	Shaft - Meter End	1
24	N37216	Bushing - 1.031 ID x 1 1/2 OD x 0.484 Lg	1
25	N59991	Bracket - Clutch Locking (N37233 Prior to 2016)	1
26	N37319	Clutch Retainer Bushing	1
27	N37787	Locknut - #10-24 Nylon Insert	4
28	N44572	Clutch Shaft - 1 Dia	1
29	N48057	Chain - #40 x 81 Link W/Conn & Offset	2
		S10954 - Connector #40 Chain S10955 - Offset Connector #40 Chain (Not Shown)	
30	N50656	Cover Stop	2
31	N50678	Brace Plate	1
32	N50683	Bushing - 5/8 OD x .385 ID x 2 1/8 Lg	1
33	N50691	Rubber Draw Latch	1
34	N50843	Bushing - 7/8 OD x .657 ID x 1 9/16 Lg	1
35	N56895	Transmission Guard (Prior to 2017)	1
	N62002	Transmission Guard (2017 to Present)	1
36	N50951	Bushing - 5/8 OD x .385 ID x 2 1/2 Lg	1
37	N51201	Transmission Cover Bracket	2
38	N51260	Clutch - 200 Ft - Lbs	1
39	N51996	Split Ring - 9/16 Dia	2
40	N51998	Lanyard - 8 Lg	1
41	N55783	Rear Transmission Weldment	1
42	N55161	Rear Tranmission Assembly (Contians all items)	1
43	P1318510	Hairpin - #19	1
44	S-752	Grease Fitting - 1/4 Straight	2
45	S-1197	Locknut - 5/8 Unitorque	2
46	S-1344	Hex Bolt - 5/8 x 5 1/2 Lg	2
47	S42294	Lynch Pin - 3/16 Dia x 1/14 Lg	1
48	W-469	Hex Head - 1/4 x 3/4 Lg	4
49	W-471	Hex Bolt - 5/16 x 1 Lg	2
50	W-475	Hex Bolt - 3/8 x 1 Lg	4
51	W-514	Hex Nut - 3/8	1
52	W-517	Hex Nut - 5/8	3
53	W-523	Lockwasher - 3/8	1
54	W-793	Washer - 5/8 ID x 1 1/8 OD	4
55	D-5277	Locknut - 1/4 Serrated	2
56	N21055	U-Bolt - U-Bolt - 1/4 x 3/4 x 1 3/8	1

Transmission
Transmission Cover - Tow Behind 9445, 9550 & 9650 Narrow Transport

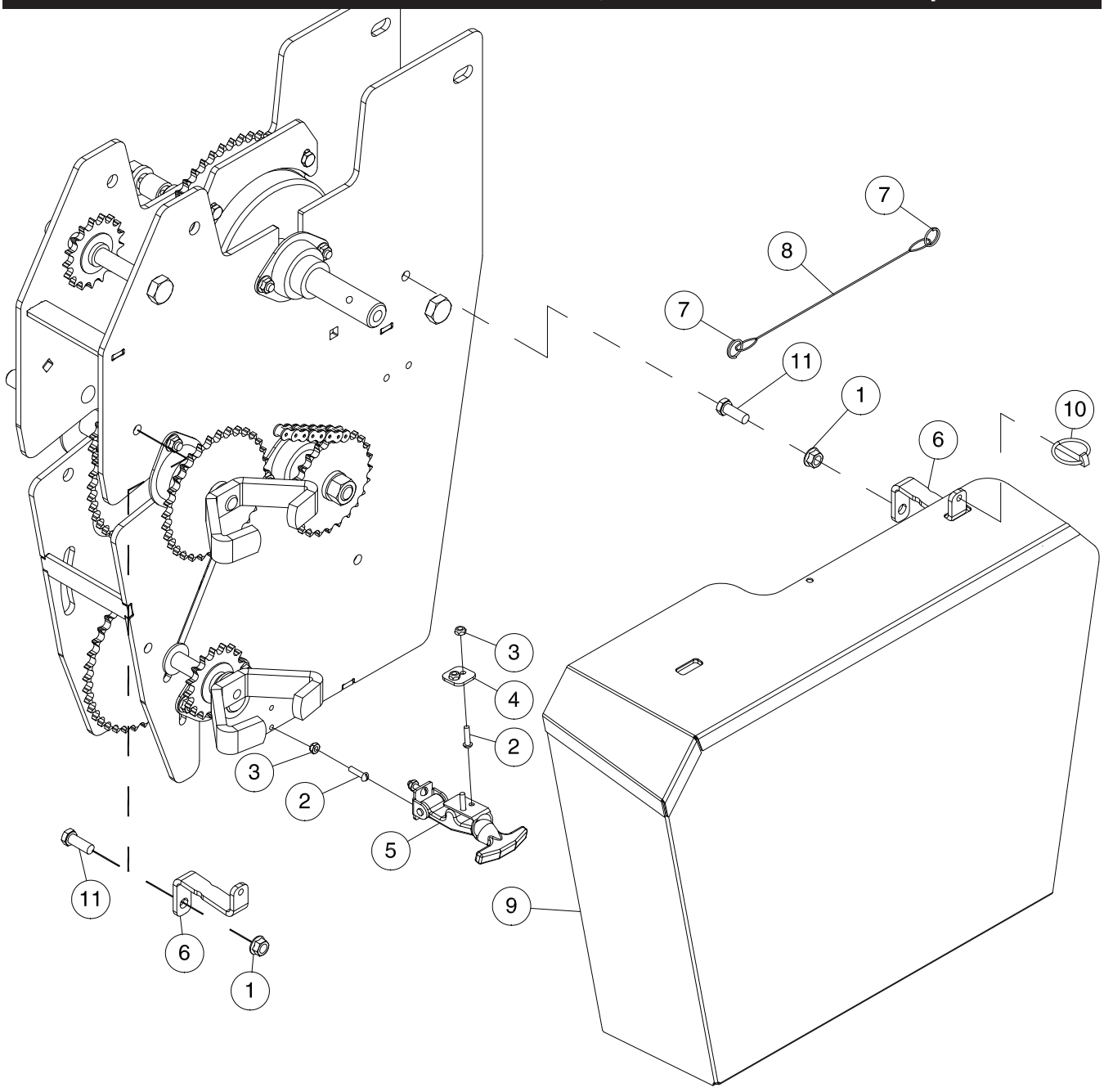

Item	Part No.	Description	Qty
1	D-5279	Lock Nut - 3/8 Serrated	2
2	N34961	Machine Screw - #10-24 x 3/4	4
3	N37787	Locknut - #10-24 Nylon Insert	4
4	N50678	Brace Plate	1
5	N50691	Rubber Draw Latch	1
6	N51201	Upper Bracket	2
7	N51996	Split Ring	2
8	N51998	Lanyard - 3/64 Dia Wire x 8 Lg	1
9	N62217	Chain Guard - Rear	1
10	S42294	Lynch Pin - 3/16 Dia x 1 3/8 Lg	1
11	W-475	Hex Bolt - 3/8 x 1 Lg	2
	N62353	Narrow Transport Rear Transmission Assembly - Refer Pg. 5-60	1

Section 8:
Transmission - Variable Rate

Section Contents

VR Drive Coupler 8-2
Mounting Bolts 8-3
9365, 9450 & 9535 Transmission (Prior to 2017) 8-4
9365, 9450 & 9535 Transmission....8-6
9365, 9450 & 9535 Rear Transmission (Prior to 2017) 8-8
9365, 9450 & 9535 Rear Transmission....8-10
9445, 9550 , 9650, 9800 & 91000 Transmission (Prior to 2017) 8-12
9445, 9550 , 9650, 9800 & 91000 Transmission....8-14
9445, 9550 & 9650 Tow Behind Transmission Rear (Prior to 2016)....8-16
9445, 9550 & 9650 Tow Between Transmission Rear (Prior to 2016)....8-18
9445,9550, 9650, 9800 & 91000 Transmission Rear (Prior to 2017)....8-20
9445,9550, 9650, 9800 & 91000 Transmission Rear....8-22
Transmission Cover - Tow Behind 9445, 9550 & 9650 Narrow Transport....8-24
Transmission Orbit Motor....8-25

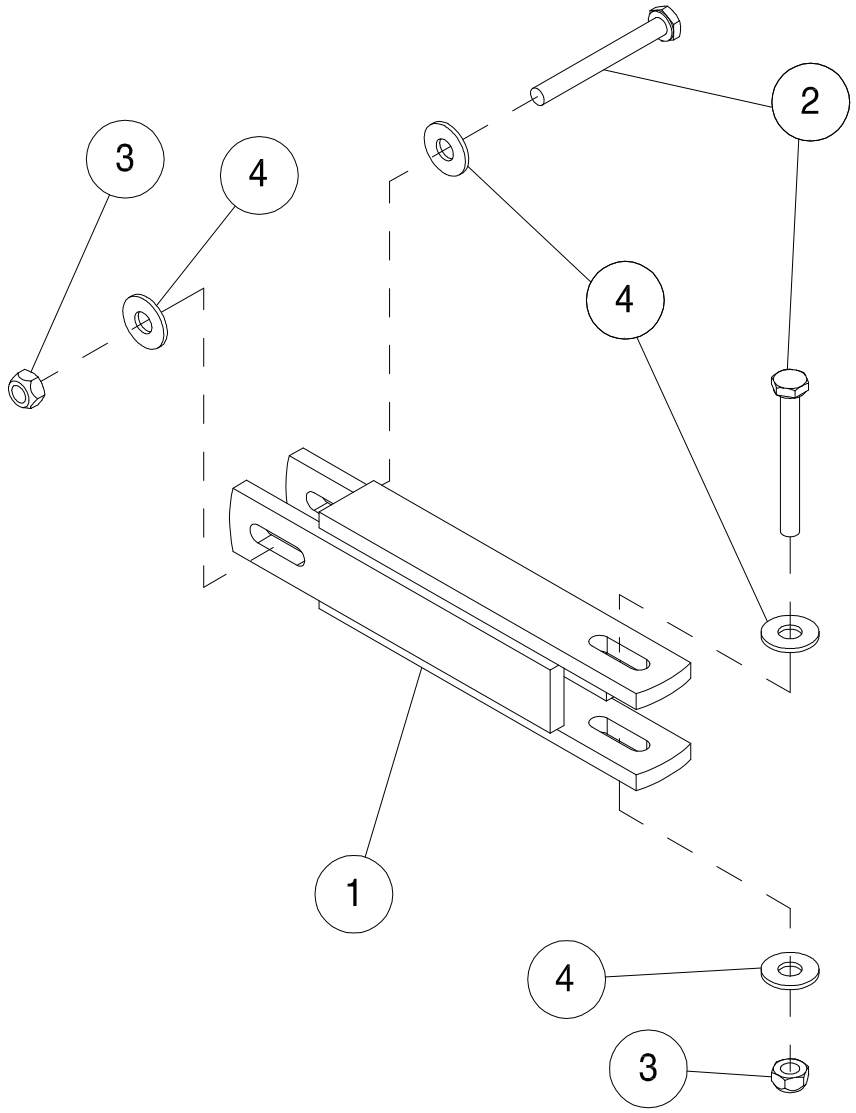

Item	Part No.	Description	Qty
1	N37428	Coupler - 5 1/4 Lg (Small Frame)	1
	N42535	Coupler - 7 13/16 Lg (Large Frame) (9800 - 10 Wide)	1
	N44591	Coupler - 9 7/8 Lg (9800 - 9 Wide)	1
2	N22777	Hex Bolt - 1/4 x 2 1/4 Lg x 3/8 Thread Lg - Gr 8	2
3	N22778	Locknut - 1/4 Nylon Insert	2
4	S-1198	Washer - 5/16 ID x 3/4 OD x .065	4

Transmission
Mounting Bolts

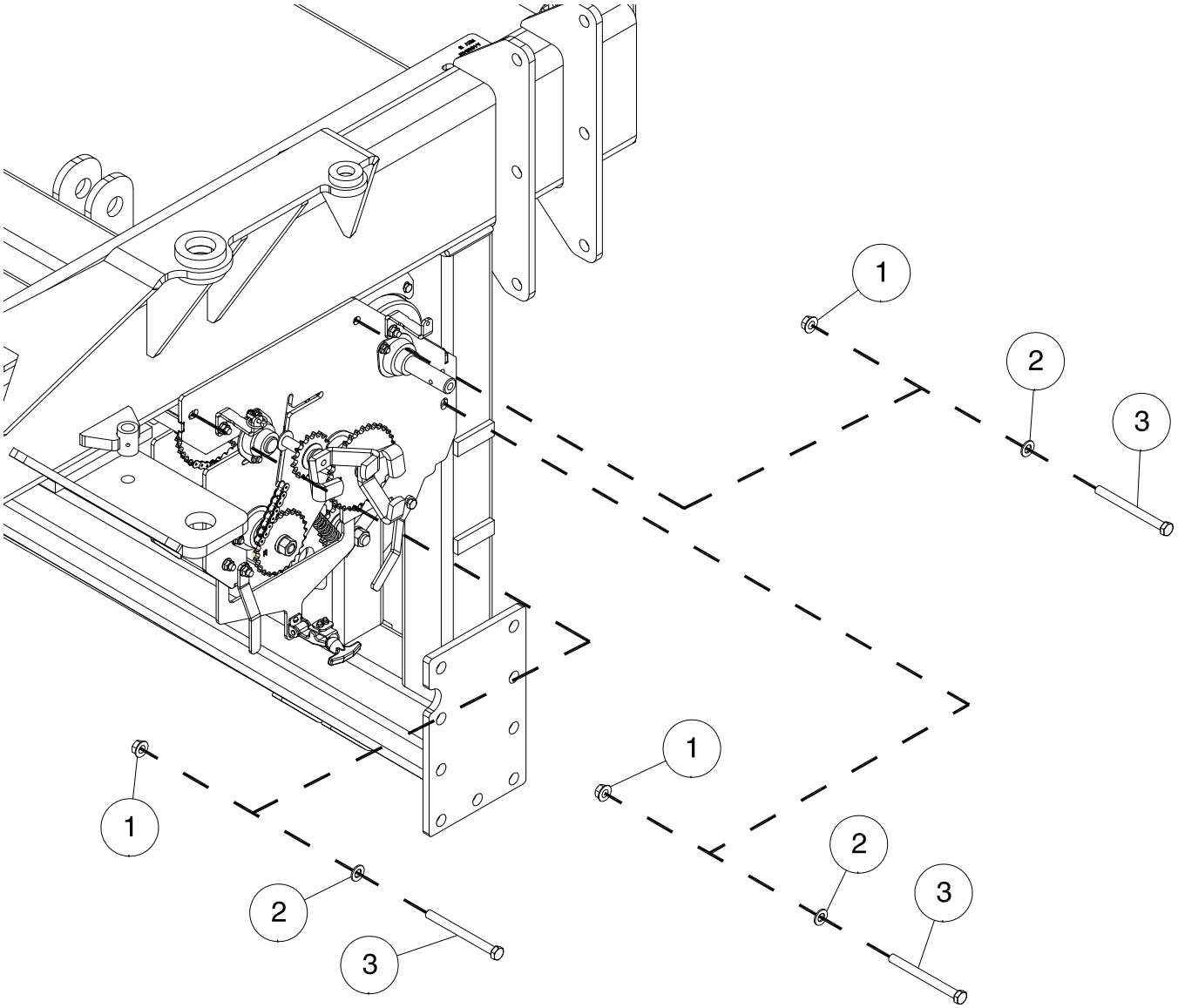

Item	Part No.	Description	Qty
1	D14565	Flange Lock Nut - 1/2	3
2	S-1925	FLat Washer - 1/2	3
3	W-496	Hex Bolt - 1/2 x 5 1/2 Lg	3

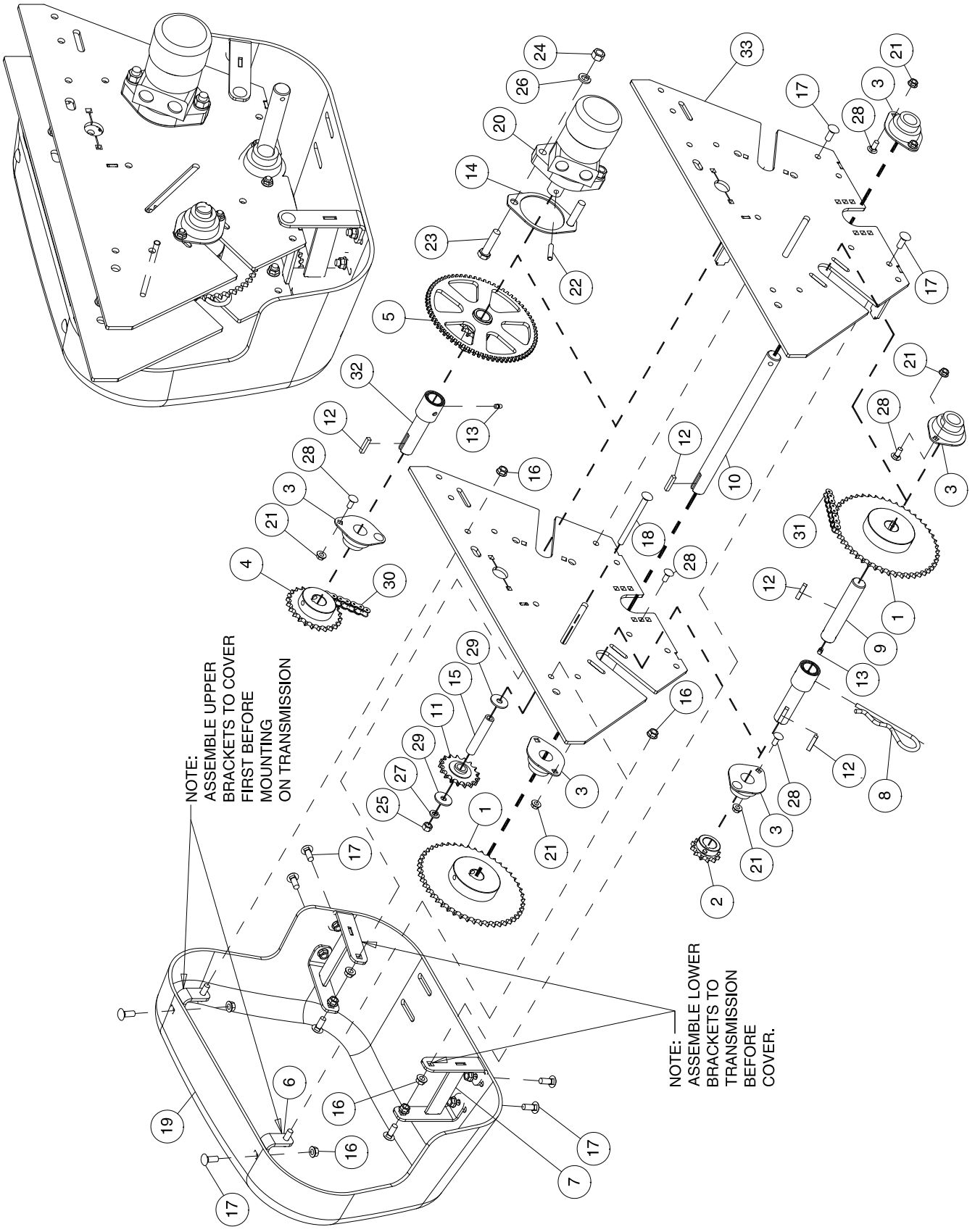
NOTE:
ASSEMBLE UPPER
BRACKETS TO COVER
FIRST BEFORE
MOUNTING
ON TRANSMISSION
NOTE:
ASSEMBLE LOWER
BRACKETS TO
TRANSMISSION
BEFORE
COVER.

Variable Rate System - 9365, 9450 & 9535 Transmission (Prior to 2017)			
Item	**Part No.**	**Description**	**Qty**
1	D10747	Sprocket - 40B48	2
2	D17946	Sprocket - 40B12	1
3	N53889	Flangette Bearing - 1” Bore	5
4	N29338	Sprocket - 40B24	1
5	N45530	Shaft - Slow Speed - 40A12 - (72 Teeth on Sensor Wheel)	1
6	N50198	Retainer Clip - Upper	2
7	N50780	Cover Mounting Bracket	2
8	P13185	Hairpin - #19	1
9	N29341	Shaft - Slow Speed	1
10	N29342	Shaft - Meter End	1
11	D17808	Sprocket Idler	1
12	S10730	Key - 1/4 x 1/4 x 1 1/4 Lg	4
13	S-752	Grease Fitting - 1/4	2
14	N29371	Shim	1
15	N50842	Bushing - .385 ID x 5/8 OD x 3 1/4 Lg	1
16	D-5279	Flange Lock Nut - 3/8	12
17	P7C616	Carriage Bolt - 3/8 x 1 Lg	10
18	N37219	Carriage Bolt - 3/8 x 4 1/2 Lg	1
19	N50190	Main VR Chain Guard	1
20	N29319	Hydraulic Motor - DANFOSS DH80 - **(See Page 8-25)**	1
21	D-5278	Flange Lock Nut - 5/16	10
22	N29375	Drive Pin - 5/16 x 1 1/2 (Groove)	1
23	W-488	Hex Bolt - 1/2 x 2 Lg	2
24	W-516	Hex Nut - 1/2	2
25	W-514	Hex Nut - 3/8	1
26	W-525	Lockwasher - 1/2	2
27	W-523	Lockwasher - 3/8	1
28	D-5259	Carriage Bolt - 5/16 x 3/4 Lg	10
29	N19706	Washer - 13/32 ID x 1 1/4 OD x .100	2
30	N29367	Chain - #40 x 76 Link W/Conn & Offset	1
31	N29368	Chain - #40 x 73 Link W/Conn & Offset S10954 - Connector #40 Chain S10955 - Offset Connector #40 Chain (Not Shown)	1
32	N29340	Shaft - Slow Speed (N16853 Oillite Bushing)	2
33	N51219	SF Main Weldment	1
	N50648	Transmision Assembly - Includes all items above	

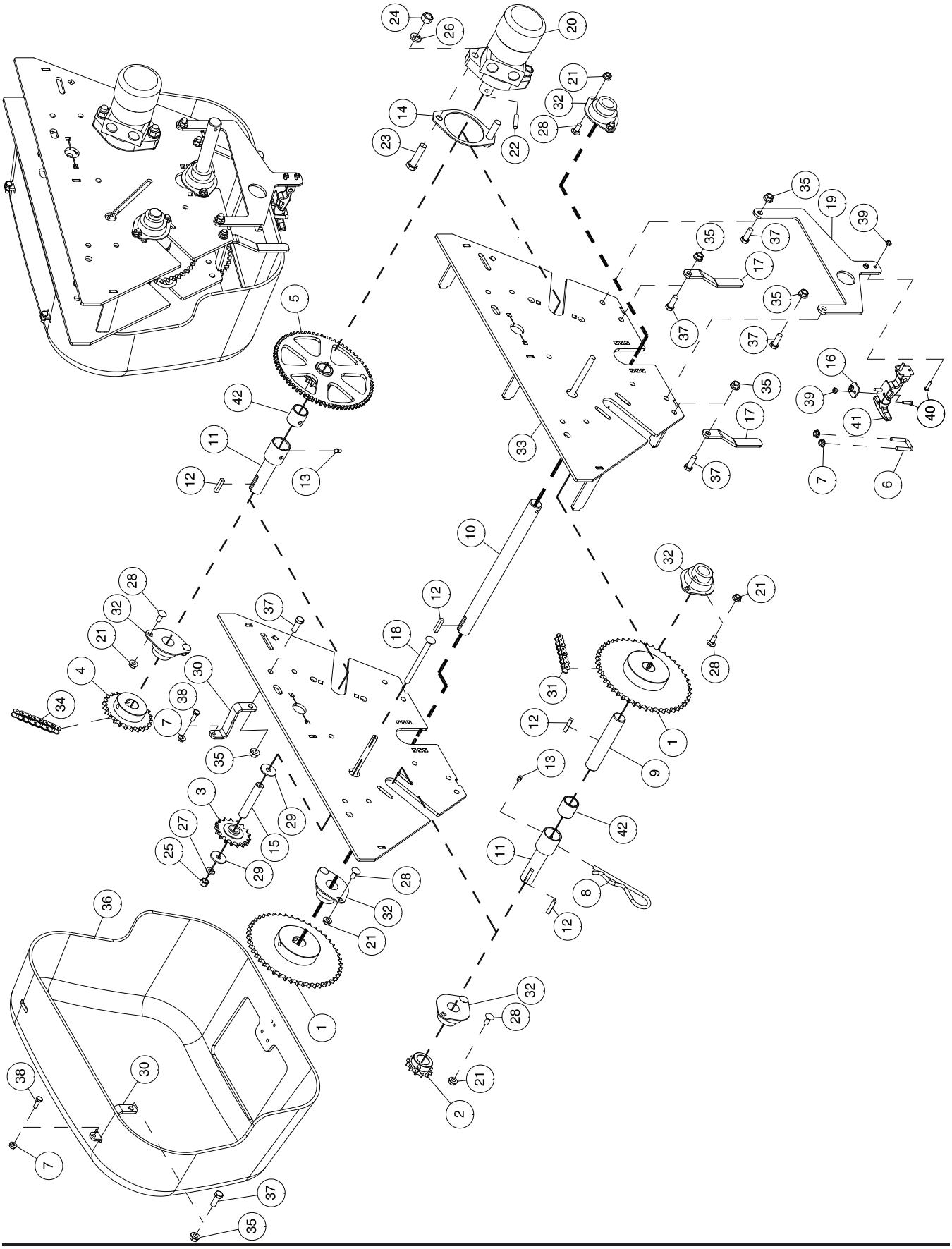
24
26
20
21
32
28
14
23
22
35
19
39
35
37
17
35
37
37
16
39
41
40
7
6
35
17
37
5
42
11
12
13
33
10
32
21
28
12
18
37
28
32
21
4
34
30
38
7
35
3
27
25
29
15
29
28
32
21
36
1
38
30
7
37
35
31
12
13
1
9
42
11
8
12
32
28
21
2

Variable Rate System - 9365, 9450 & 9535 Transmission			
Item	**Part No.**	**Description**	**Qty**
1	D10747	Sprocket - 40B48	2
2	D17946	Sprocket - 40B12	1
3	D17808	Sprocket Idler - 40A17	1
4	N29338	Sprocket - 40B24	1
5	N45530	Shaft -Slow Speed - 40A12 - (72 Teeth On Sensor Wheel)	1
6	N21055	U-Bolt - 1/4 x 3/4 x 1 3/8	1
7	D-5277	Lock Nut - 1/4 Serrated	4
8	P1318510	Hairpin - #19	1
9	N29341	Shaft-Slow Speed - 5 3/8 Lg	1
10	N29342	Shaft-Meter End - 13 13/16 Lg	1
11	N29340	Shaft-Slow Speed - 5 Lg (Includes item 42)	2
12	S10730	Key - 1/4 x 1/4 x 1 1/4 Lg	4
13	S-752	Grease Fitting - 1/4 Straight	2
14	N29371	Shim	1
15	N50842	Bushing - 0.385 ID x 5/8 OD x 3 1/4 Lg	1
16	N50678	Brace Plate	1
17	N50656	Cover Stop	2
18	N37219	Carriage Bolt - 3/8 x 4 1/2 Lg	1
19	N62361	Mount Plate	1
20	**N72140**	**Hydraulic Motor - Danfoss OMPX-80 - 2021 to present (See Page 8-25)**	1
	N29319	Hydraulic Motor - DANFOSS DH80 - Prior to 2021	1
21	D-5278	Flange Lock Nut - 5/16	10
22	N29375	Drive Pin - 5/16 x 1 1/2 (Groove)	1
23	W-488	Hex Bolt - 1/2 x 2 Lg	2
24	W-516	Hex Nut - 1/2	2
25	W-514	Hex Nut - 3/8	1
26	W-525	Lockwasher - 1/2	2
27	W-523	Lockwasher - 3/8	1
28	D-5259	Carriage Bolt - 5/16 x 3/4 Lg	10
29	N19706	Washer - 3/8 ID x 1 1/4 OD x 0.1 Thick	2
30	N51201	Upper Bracket	2
31	N29368	Chain - #40 x 73 Link W/Conn & Off	1
32	N53889	Flangette Bearing - 1” Bore	5
33	N51219	SF Main Weldment	1
34	N14262	Chain - #40 x 80 Link W/Conn	1
		S10954 - Connector #40 Chain S10955 - Offset Connector #40 Chain (Not Shown)	
35	D-5279	Lock Nut - 3/8 Serrated	6
36	N62003	Main VR Chain Guard	1
37	W-475	Hex Bolt - 3/8 x 1 Lg	6
38	W-469	Hex Bolt - 1/4 x 3/4 Lg	2
39	N37787	Nylon Locknut - #10-24	4
40	N34961	Machine Screw - #10-24 x 3/4	4
41	N50691	Rubber Draw Latch	1
42	N16853	Oillite Bushing	2
	N50648	Transmission Assembly - Includes all items above	

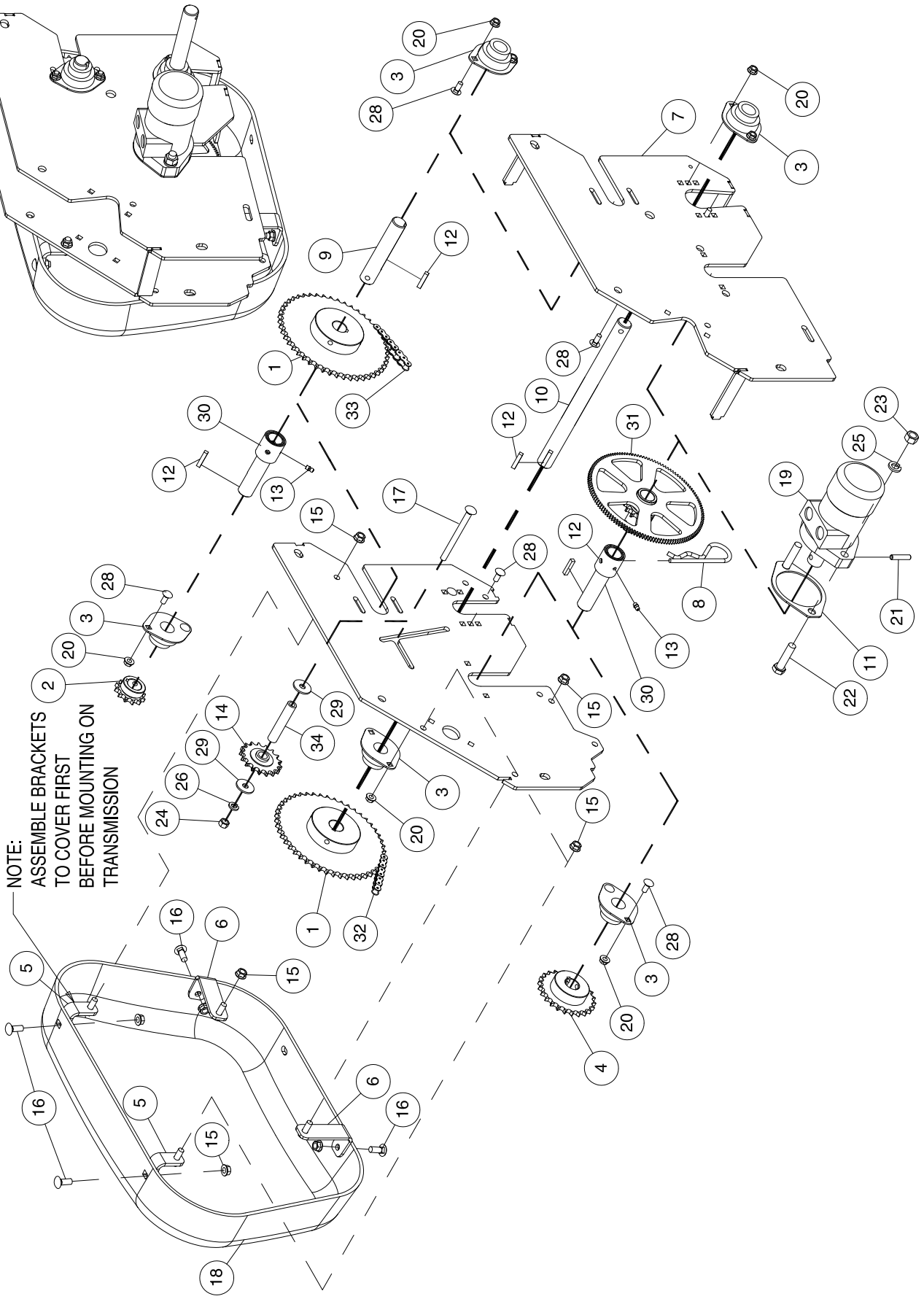
NOTE:
ASSEMBLE BRACKETS
TO COVER FIRST
BEFORE MOUNTING ON
TRANSMISSION

Variable Rate System - 9365, 9450 & 9535 Rear Transmission (Prior to 2017)			
Item	**Part No.**	**Description**	**Qty**
1	D10747	Sprocket - 40B48	2
2	D17946	Sprocket - 40B12	1
3	N53889	Flangette Bearing - 1” Bore	5
4	N29338	Sprocket - 40B24	1
5	N50198	Retainer Clip - Upper	2
6	N50777	Retainer Clip - Strt	2
7	N55484	Transmission Weldment	1
8	P13185	Hairpin - #19	1
9	N29341	Shaft - Slow Speed	1
10	N29342	Shaft - Meter End	1
11	N29371	Shim	1
12	S10730	Key - 1/4 x 1/4 x 1 1/4 Lg	4
13	S-752	Grease Fitting - 1/4	2
14	D17808	Sprocket Idler	1
15	D-5279	Flange Lock Nut - 3/8	8
16	P7C616	Carriage Bolt - 3/8 x 1 Lg	4
17	N37219	Carriage Bolt - 3/8 x 4 1/2 Lg	1
18	N50195	Rear VR Chain Guard	1
19	N29319	Hydraulic Motor - DANFOSS DH80 - **(See Page 8-25)**	1
20	D-5278	Flange Lock Nut - 5/16	10
21	N29375	Drive Pin - 5/16 x 1 1/2 (Groove)	1
22	W-488	Hex Bolt - 1/2 x 2 Lg	2
23	W-516	Hex Nut - 1/2	2
24	W-514	Hex Nut - 3/8	1
25	W-525	Lockwasher - 1/2	2
26	W-523	Lockwasher - 3/8	1
28	D-5259	Carriage Bolt - 5/16 x 3/4 Lg	10
29	N19706	Washer - 0.406 ID x 1 1/4 OD x 0.1 Thick	2
30	N29340	Shaft- Slow Speed (N16853 Oillite Bushing)	2
31	N45530	Shaft - Slow Speed - 40A12 - (72 Teeth on Sensor Wheel)	1
32	N29368	Chain - #40 x 73 Link W/Conn & Off	1
33	N37414	Chain - #40 x 65 Link W/Conn & Off S10954 - Connector #40 Chain S10955 - Offset Connector #40 Chain (Not Shown)	1
34	N50842	Bushing - 0.385 ID x 5/8 OD x 3 1/4 Lg	1
	N51257	Transmission Assembly - Includes all items above	

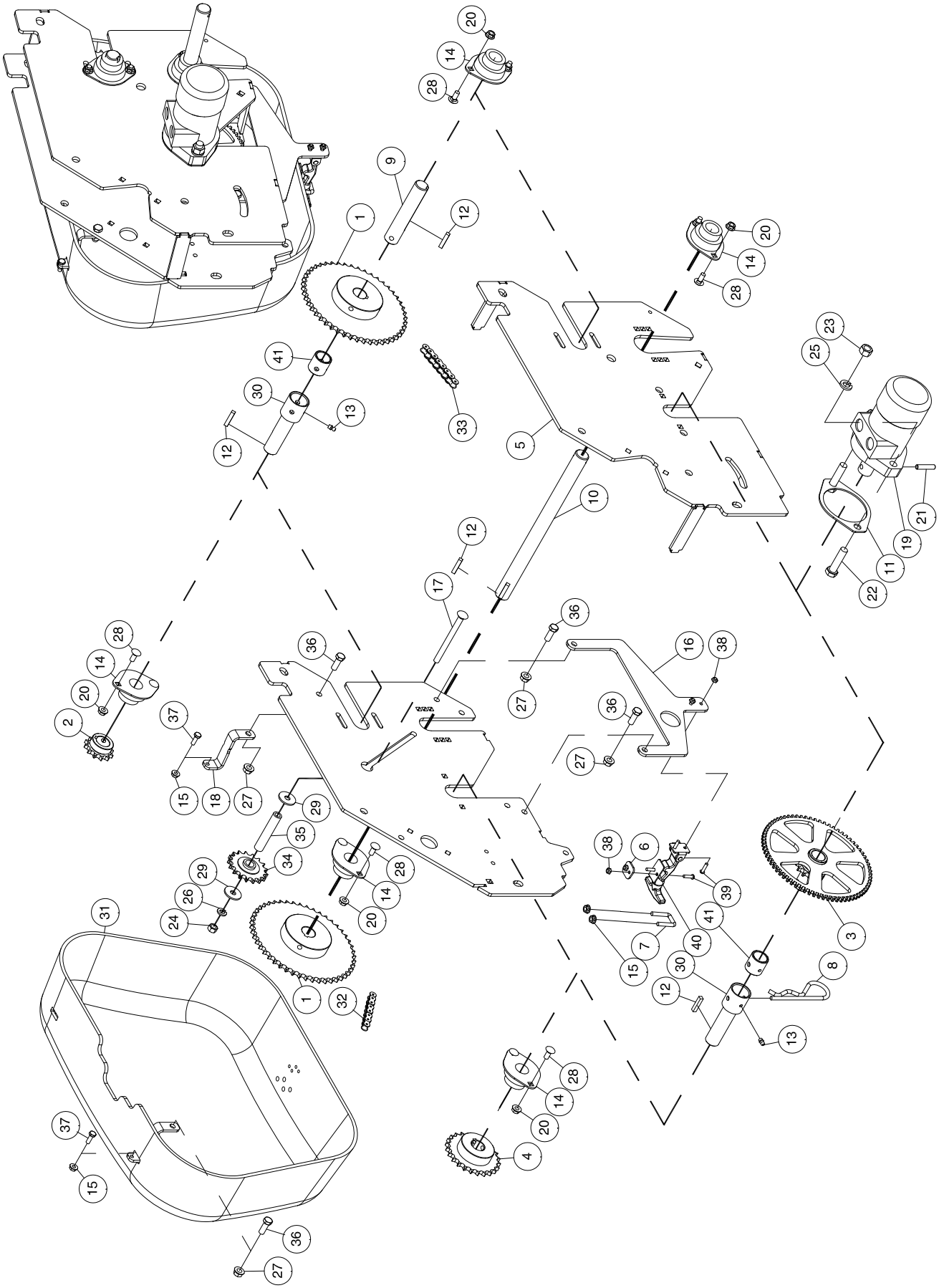

Variable Rate System - 9365, 9450 & 9535 Rear Transmission

Item	Part No.	Description	Qty
1	D10747	Sprocket - 40B48	2
2	D17946	Sprocket - 40B12	1
3	N45530	Shaft -Slow Speed - 40A12 - (72 Teeth On Sensor Wheel)	1
4	N29338	Sprocket - 40B24	1
5	N55484	Transmission Weldment	1
6	N50678	Brace Plate	1
7	N21055	U-Bolt - 1/4 x 3/4 x 1 3/8 UL	1
8	P1318510	Hairpin - #19	1
9	N29341	Shaft-Slow Speed - 5 3/8 Lg	1
10	N29342	Shaft-Meter End - 13 13/16 Lg	1
11	N29371	Shim	1
12	S10730	Key - 1/4 x 1/4 x 1 1/4 Lg	4
13	S-752	Grease Fitting - 1/4 Straight	2
14	N53889	Flangette Bearing 1” Bore	5
15	D-5277	Lock Nut - 1/4 Serrated	4
16	N62361	Mount Plate	1
17	N37219	Carriage Bolt - 3/8 x 4 1/2 Lg	1
18	N51201	Upper Bracket	2
19	**N72140**	**Hydraulic Motor - Danfoss OMPX-80 - 2021 to present (See Page 8-25)**	1
	N29319	Hydraulic Motor - DANFOSS DH80 - Prior to 2021	1
20	D-5278	Flange Lock Nut - 5/16	10
21	N29375	Drive Pin - 5/16 x 1 1/2 (Groove)	1
22	W-488	Hex Bolt - 1/2 x 2 Lg	2
23	W-516	Hex Nut - 1/2	2
24	W-514	Hex Nut - 3/8	1
25	W-525	Lockwasher - 1/2	2
26	W-523	Lockwasher - 3/8	1
27	D-5279	Lock nut - 3/8 Serrated	4
28	D-5259	Carriage Bolt - 5/16 x 3/4 Lg	10
29	N19706	Washer - 3/8 ID x 1 1/4 OD x 0.1 Thick	2
30	N29340	Shaft-Slow Speed - 5 Lg	2
31	N62002	Chain Guard - Mid & Large Frame (Prior to 2023)	1
	N62217	Chain Guard Steel - Rear **(2023 to Present)** Not Shown	1
32	N29368	Chain - #40 x 73 Link W/Conn & Off	1
33	N37414	Chain - #40 x 65 Link W/Conn & Off	1
		S10954 - Connector #40 Chain S10955 - Offset Connector #40 Chain (Not Shown)	
34	D17808	Sprocket Idler - 40A17	1
35	N50842	Bushing - 0.385 ID x 5/8 OD x 3 1/4 Lg	1
36	W-475	Hex Bolt - 3/8 x 1 Lg	4
37	W-469	Hex Bolt - 1/4 x 3/4 Lg	2
38	N37787	Nylon Locknut - #10-24	4
39	N34961	Machine Screw - #10-24 x 3/4	4
40	N50691	Rubber Draw Latch	1
41	N16853	Oillite Bushing	2
	N51257	Transmission Assembly - Includes all items above	

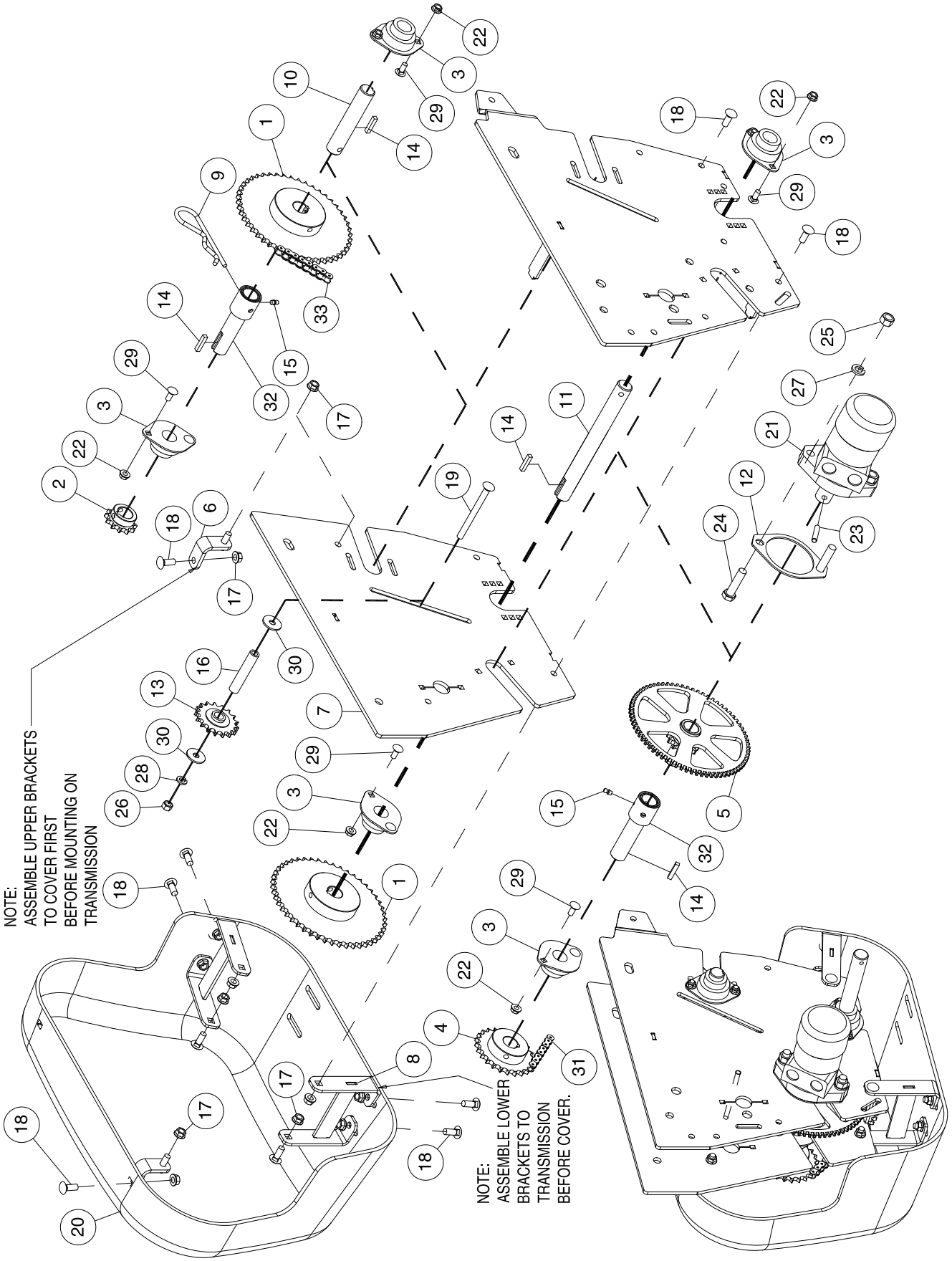
NOTE:
ASSEMBLE UPPER BRACKETS
TO COVER FIRST
BEFORE MOUNTING ON
TRANSMISSION
NOTE:
ASSEMBLE LOWER
BRACKETS TO
TRANSMISSION
BEFORE COVER.

Variable Rate System - 9445, 9550 , 9650, 9800 & 91000 Transmission (Prior to 2017)

Item	Part No.	Description	Qty
1	D10747	Sprocket - 40B48	2
2	D17946	Sprocket - 40B12	1
3	N53889	Flangette Bearing - 1” Bore	5
4	N29338	Sprocket - 40B24	1
5	N45530	Shaft - Slow Speed - 40A12 - (72 Teeth on Sensor Wheel)	1
6	N50198	Retainer Clip - Upper	2
7	N50665	Transmission Weldment	1
8	N50780	Cover Mounting Bracket	2
9	P13185	Hairpin - #19	1
10	N29341	Shaft - Slow Speed	1
11	N29342	Shaft - Meter End	1
12	N29371	Shim	1
13	D17808	Sprocket Idler	1
14	S10730	Key - 1/4 x 1/4 x 1 1/4 Lg	4
15	S-752	Grease Fitting - 1/4	2
16	N50842	Bushing - .385 ID x 5/8 OD x 3 1/4 Lg	1
17	D-5279	Flange Lock Nut - 3/8	12
18	P7C616	Carriage Bolt - 3/8 x 1 Lg	10
19	N37219	Carriage Bolt - 3/8 x 4 1/2 Lg	1
20	N50190	Main VR Chain Guard	1
21	N29319	Hydraulic Motor - DANFOSS DH80 - **(See Page 8-25)**	1
22	D-5278	Flange Lock Nut - 5/16	10
23	N29375	Drive Pin - 5/16 x 1 1/2 (Groove)	1
24	W-488	Hex Bolt - 1/2 x 2 Lg	2
25	W-516	Hex Nut - 1/2	2
26	W-514	Hex Nut - 3/8	1
27	W-525	Lockwasher - 1/2	2
28	W-523	Lockwasher - 3/8	1
29	D-5259	Carriage Bolt - 5/16 x 3/4 Lg	10
30	N19706	Washer - .406 ID x 1 1/4 OD x 0.1 Thick	2
31	N14262	Chain - #40x80 Link W/Conn	1
32	N29340	Shaft - Slow Speed (N16853 Oillite Bushing)	2
33	N29368	Chain - #40 x 73 Link W/Conn & Offset S10954 - Connector #40 Chain S10955 - Offset Connector #40 Chain (Not Shown)	1
	N50669	Transmission Assembly - Includes all items above	

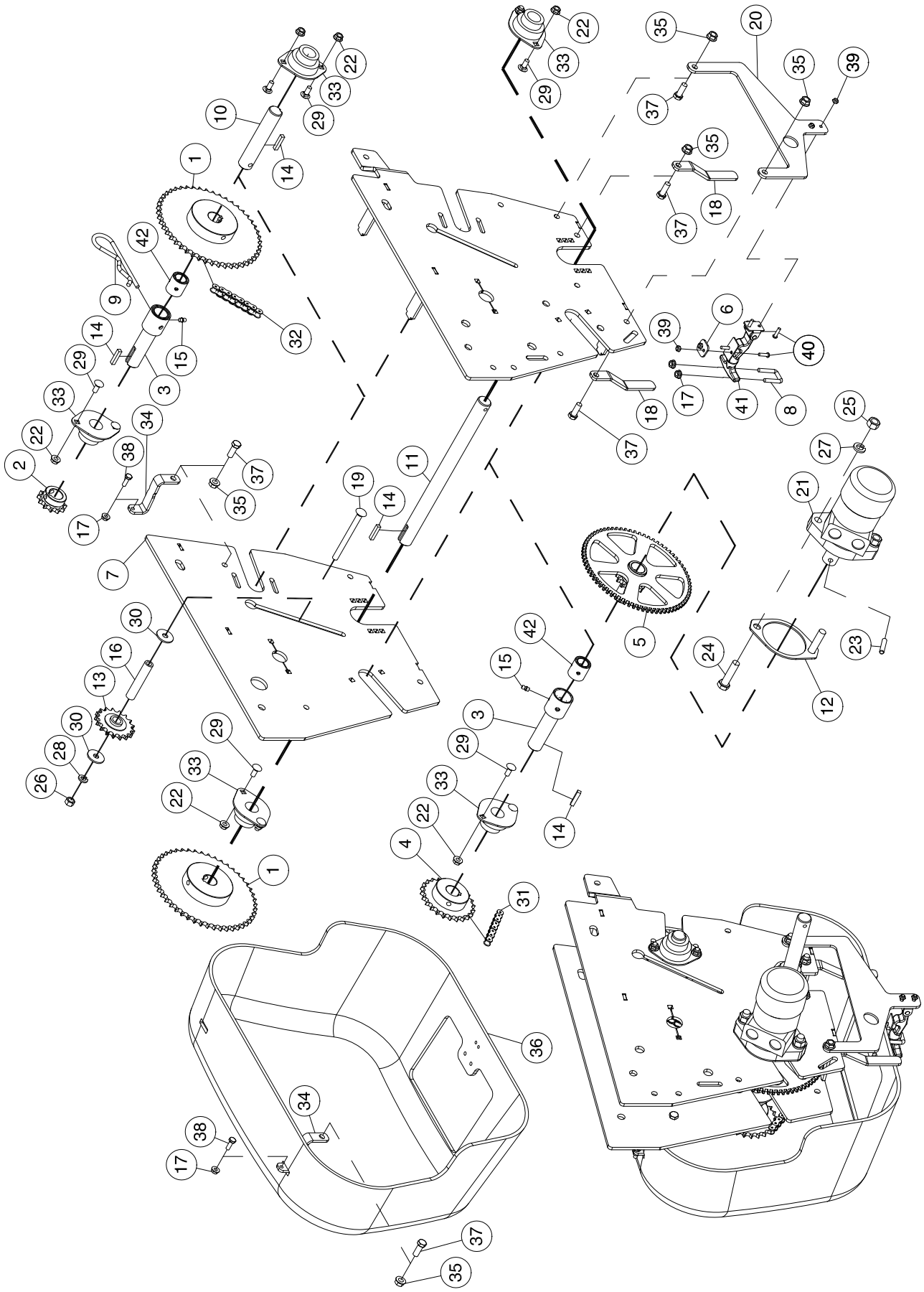
1
2
3
4
5
6
7
8
9
10
11
12
13
14
15
16
17
18
19
20
21
22
23
24
25
26
27
28
29
30
31
32
33
34
35
36
37
38
39
40
41
42

Variable Rate System - 9445, 9550 , 9650, 9800 & 91000 Transmission

Item	Part No.	Description	Qty
1	D10747	Sprocket - 40B48	2
2	D17946	Sprocket - 40B12	1
3	N29340	Shaft-Slow Speed - 5 Lg	2
4	N29338	Sprocket - 40B24	1
5	N45530	Shaft -Slow Speed - 40A12 - (72 Teeth On Sensor Wheel)	1
6	N50678	Brace Plate	1
7	N50665	Transmission Weldment	1
8	N21055	U-Bolt - 1/4 x 3/4 x 1 3/8 UL	1
9	P1318510	Hairpin - #19	1
10	N29341	Shaft-Slow Speed - 5 3/8 Lg	1
11	N29342	Shaft-Meter End - 13 13/16 Lg	1
12	N29371	Shim	1
13	D17808	Sprocket Idler - 40A17	1
14	S10730	Key - 1/4 x 1/4 x 1 1/4 Lg	4
15	S-752	Grease Fitting - 1/4 Straight	2
16	N50842	Bushing - 0.385 ID x 5/8 OD x 3 1/4 Lg	1
17	D-5277	Lock Nut - 1/4 Serrated	4
18	N50656	Cover Stop	2
19	N37219	Carriage Bolt - 3/8 x 4 1/2 Lg	1
20	N62361	Mount Plate	1
21	**N72140**	**Hydraulic Motor - Danfoss OMPX-80 - 2021 to present (See Page 8-25)**	1
	N29319	Hydraulic Motor - DANFOSS DH80 - Prior to 2021	1
22	D-5278	Flange Lock Nut - 5/16	10
23	N29375	Drive Pin - 5/16 x 1 1/2 (Groove)	1
24	W-488	Hex Bolt - 1/2 x 2 Lg	2
25	W-516	Hex Nut - 1/2	2
26	W-514	Hex Nut - 3/8	1
27	W-525	Lockwasher - 1/2	2
28	W-523	Lockwasher - 3/8	1
29	D-5259	Carriage Bolt - 5/16 x 3/4 Lg	10
30	N19706	Washer - 3/8 ID x 1 1/4 OD x 0.1 Thick	2
31	N14262	Chain - #40 x 80 Link W/Conn	1
32	N29368	Chain - #40 x 73 Link W/Conn & Off	1
		S10954 - Connector #40 Chain S10955 - Offset Connector #40 Chain (Not Shown)	
33	N53889	Flangette Bearing - 1” Bore	5
34	N51201	Upper Bracket	2
35	D-5279	Lock Nut - 3/8 Serrated	5
36	N62003	Chain Guard	1
37	W-475	Hex Bolt - 3/8 x 1 Lg	5
38	W-469	Hex Bolt - 1/4 x 3/4 Lg	2
39	N37787	Nylon Locknut - #10-24	4
40	N34961	Machine Screw - #10-24 x 3/4 Lg	4
41	N50691	Rubber Draw Latch	1
42	N16853	Oilite Bushing	2
	N50669	Transmission Assembly - Includes all items above	

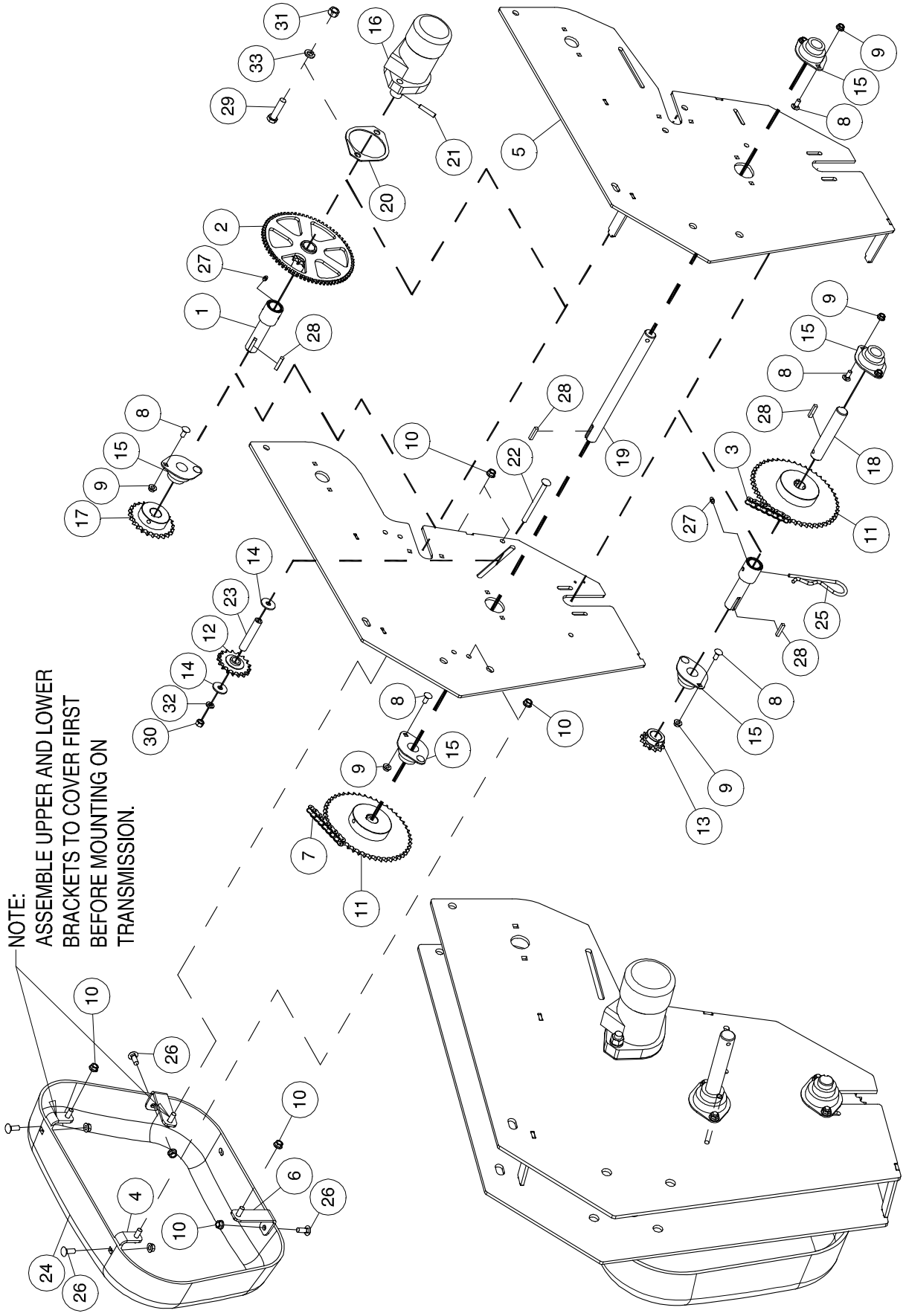
NOTE:
ASSEMBLE UPPER AND LOWER
BRACKETS TO COVER FIRST
BEFORE MOUNTING ON
TRANSMISSION.

Variable Rate System - 9445, 9550 & 9650 Tow Behind Transmission Rear (Prior to 2016)

Item	Part No.	Description	Qty
1	N29340	Shaft-Slow Speed (N16853 Oillite Bushing)	2
2	N45530	Shaft - Slow Speed - 40A12 - (72 Teeth on Sensor Wheel)	1
3	N48057	Chain - #40 x 81 Link W/Conn & Offset S10954 - Connector #40 Chain S10955 - Offset Connector #40 Chain (Not Shown)	1
4	N50198	Retainer Clip - Upper	2
5	N50660	Transmission Weldment	1
6	N50777	Retainer Clip - Strt	2
7	S-5777	Chain - #40 x 84 Link W/Conn & Off	1
8	D-5259	Carriage Bolt - 5/16 x 3/4 Lg	10
9	D-5278	Flange Lock Nut - 5/16	10
10	D-5279	Flange Lock Nut - 3/8	8
11	D10747	Sprocket -40B48	2
12	D17808	Sprocket Idler	1
13	D17946	Sprocket - 40B12	1
14	N19706	Washer - .406 ID x 1 1/4 OD x .1	2
15	N53889	Flangette Bearing 1” Bore	5
16	N29319	Hydraulic Motor - DANFOSS DH80 - **(See Page 8-25)**	1
17	N29338	Sprocket - 40B24	1
18	N29341	Shaft - Slow Speed	1
19	N29342	Shaft - Meter End	1
20	N29371	Shim	1
21	N29375	Drive Pin - 5/16 x 1 1/2 (Groove)	1
22	N37219	Carriage Bolt - 3/8 x 4 1/2 Lg	1
23	N50842	Bushing - .385 ID x 5/8 OD x 3 1/4 Lg	1
24	N50195	Rear VR Chain Guard	1
25	P13185	Hairpin - #19	1
26	P7C616	Carriage Bolt - 3/8 x 1 Lg	4
27	S-752	Grease Fitting - 1/4	2
28	S10730	Key - 1/4 x 1/4 x 1 1/4 Lg	4
29	W-488	Hex Bolt - 1/2 x 2 Lg	2
30	W-514	Hex Nut - 3/8	1
31	W-516	Hex Nut - 1/2	2
32	W-523	Lockwasher - 3/8	1
33	W-525	Lockwasher - 1/2	2
	N50667	Transmission Assembly - Includes all items above	

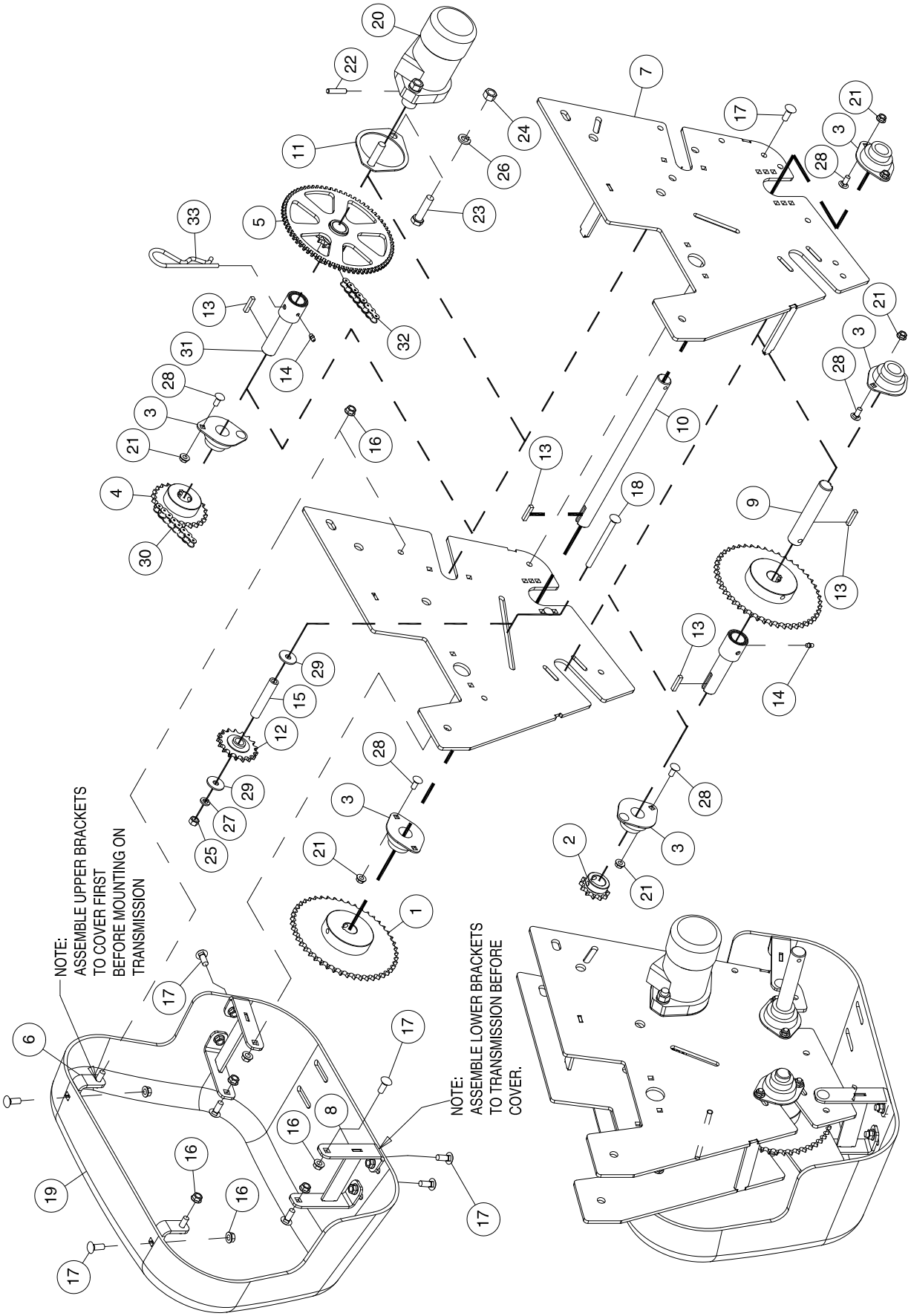
NOTE:
ASSEMBLE UPPER BRACKETS
TO COVER FIRST
BEFORE MOUNTING ON
TRANSMISSION
NOTE:
ASSEMBLE LOWER BRACKETS
TO TRANSMISSION BEFORE
COVER.

Variable Rate System - 445, 9550 & 9650 Tow Between Transmission Rear (Prior to 2016)

Item	Part No.	Description	Qty
1	D10747	Sprocket -40B48	2
2	D17946	Sprocket -40B12	1
3	N53889	Flangette Bearing - 1” Bore	5
4	N29338	Sprocket -40B24	1
5	N45530	Shaft - Slow Speed - 40A12 - (72 Teeth on Sensor Wheel)	1
6	N50198	Retainer Clip - Upper	2
7	N50659	Transmission Weldment	1
8	N50780	Cover Mtg Brkt	2
9	N29341	Shaft-Slow Speed	1
10	N29342	Shaft-Meter End	1
11	N29371	Shim	1
12	D17808	Sprocket Idler	1
13	S10730	Key - 1/4 x 1/4 x 1 1/4 Lg	4
14	S-752	Grease Fitting - 1/4	2
15	N50842	Bushing - .385 ID x 5/8 OD x 3 1/4 Lg	1
16	D-5279	Flange Lock Nut - 3/8	12
17	P7C616	Carriage Bolt - 3/8 x 1 Lg	10
18	N37219	Carriage Bolt - 3/8 x 4 1/2 Lg	1
19	N50190	Main VR Chain Guard	1
20	N29319	Hydraulic Motor - DANFOSS DH80 - **(See Page 8-25)**	1
21	D-5278	Flange Lock Nut - 5/16	10
22	N29375	Drive Pin - 5/16 x 1 1/2 (Groove)	1
23	W-488	Hex Bolt - 1/2 x 2 Lg	2
24	W-516	Hex Nut - 1/2	2
25	W-514	Hex Nut - 3/8	1
26	W-525	Lockwasher - 1/2	2
27	W-523	Lockwasher - 3/8	1
28	D-5259	Carriage Bolt - 5/16 x 3/4 Lg	10
29	N19706	Washer - .406 ID x 1 1/4 OD x .1	2
30	N14262	Chain - #40 x 80 Link W/Conn S10954 - Connector #40 Chain S10955 - Offset Connector #40 Chain (Not Shown)	1
31	N29340	Shaft - Slow Speed (N16853 Oillite Bushing)	2
32	N29368	Chain - #40 x 73 Link W/Conn & Offset	1
33	P13185	Hairpin - #19	1
	N50668	Transmission Assembly - Includes all items above	

Variable Rate System
9445,9550, 9650, 9800 & 91000 Transmission Rear (Prior to 2017)

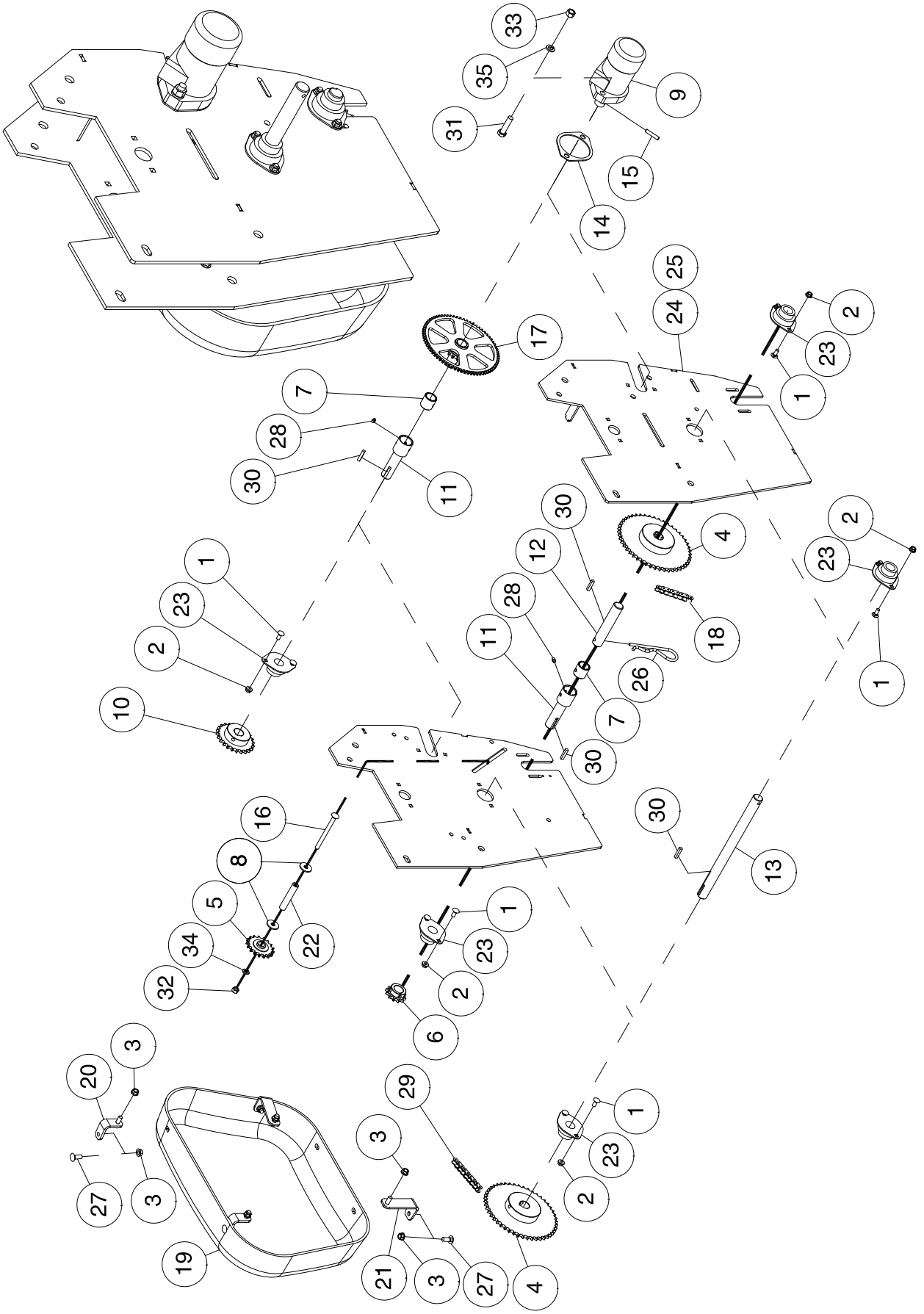

Variable Rate System - 9445,9550, 9650, 9800 & 91000 Transmission Rear (Prior to 2017)

Item	Part No.	Description	Qty
1	D-5259	Carriage Bolt - 5/16 x 3/4 Lg	10
2	D-5278	Flange Lock Nut - 5/16	10
3	D-5279	Flange Lock Nut - 3/8 Serrated	8
4	D10747	Sprocket - 40B48	2
5	D17808	Sprocket Idler - 40A17 - W/5/8 Bore	1
6	D17946	Sprocket - 40B12	1
7	N16853	Oillite Bushing	2
8	N19706	Washer - 13/32 ID x 1 1/4 OD x .100 Thick	2
9	N29319	Hydraulic Motor - DANFOSS DH80 - **(See Page 8-25)**	1
10	N29338	Sprocket - 40B24	1
11	N29340	Shaft - Slow Speed (Includes Item 7)	2
12	N29341	Shaft - Slow Speed	1
13	N29342	Shaft - Meter End	1
14	N29371	Shim	1
15	N29375	Groove Pin - 5/16 x 1 1/2	1
16	N37219	Carriage Bolt - 3/8 x 4 1/2 Lg	1
17	N45530	Shaft - Slow Speed - 40A12 - (72 Teeth on Sensor Wheel)	1
18	N48057	Chain - #40 x 81 Link W/Conn & Offset	1
19	N50195	Tranmission Guard	1
20	N50198	Retainer Clip - Upper	2
21	N50777	Retainer Clip - Strt	2
22	N50842	Bushing - 5/8 OD x .385 ID	1
23	N53889	Flangette Bearing 1” Bore	5
24	N55783	Rear Transmission Weldment	1
25	N55162	Rear Variable Rate Transmission Assembly	1
26	P1318510	Hairpin - #19	1
27	P7C616	Carriage Bolt - 3/8 x 1	4
28	S-752	Str. Grease Fitting - 1/4	2
29	S-5777	Chain - #40 x 84 Link W/Conn & Off S10954 - Connector #40 Chain S10955 - Offset Connector #40 Chain (Not Shown)	1
30	S10730	Keyway - 1/4	4
31	W-488	Hex Bolt - 1/2 x 2 Lg	2
32	W-514	Hex Nut - 3/8	1
33	W-516	Hex Nut - 1/2	2
34	W-523	Lockwasher - 3/8	1
35	W-525	Lockwasher - 1/2	2
	N55162	Transmissions Assembly - Includes all items above	

Variable Rate System
9445,9550, 9650, 9800 & 91000 Transmission Rear

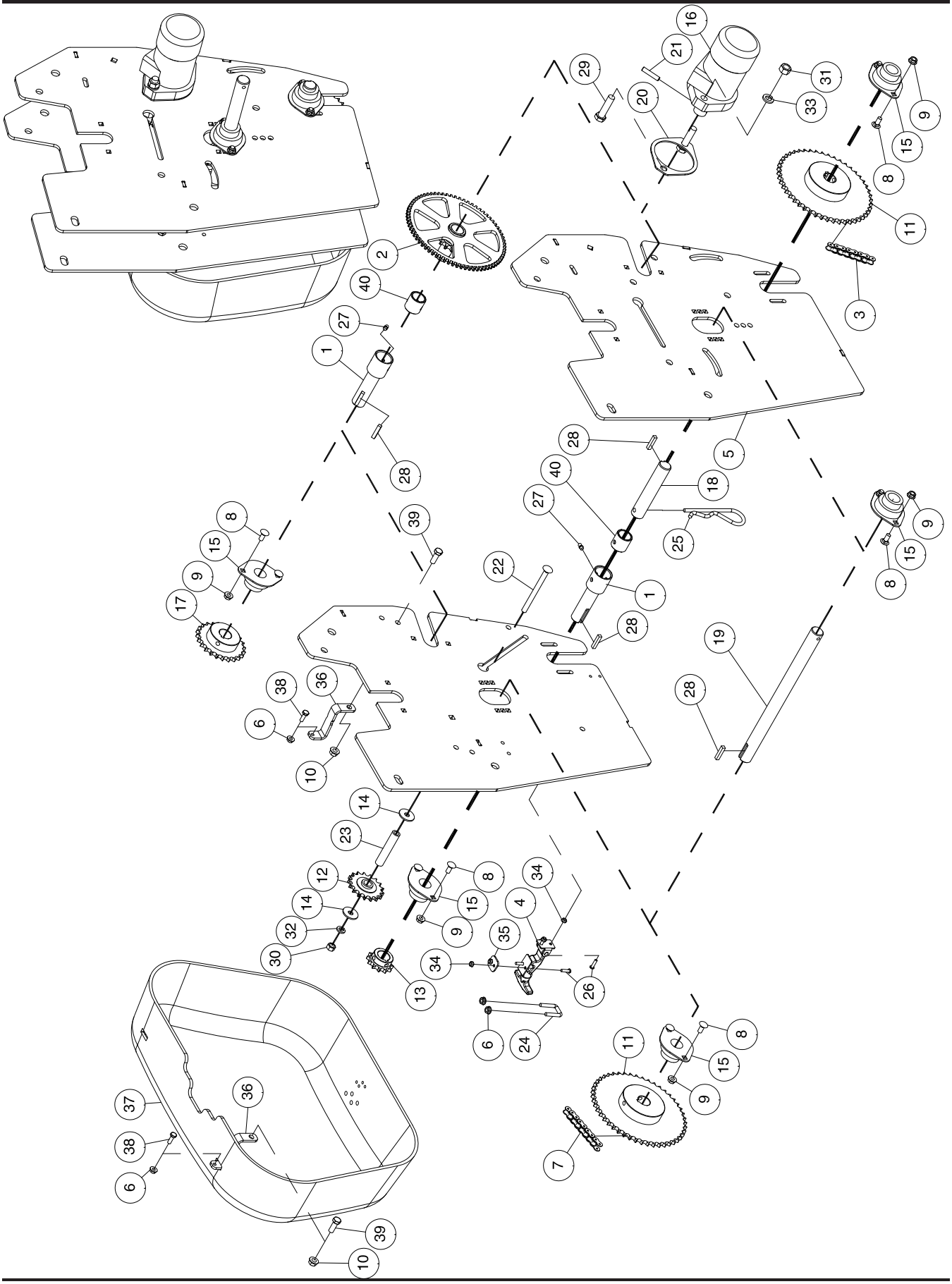

Variable Rate System - 9445,9550, 9650, 9800 & 91000 Transmission Rear			
Item	**Part No.**	**Description**	**Qty**
1	N29340	Shaft-Slow Speed - 5 Lg (Includes Item 40)	2
2	N45530	Shaft -Slow Speed - 40A12 - (72 Teeth On Sensor Wheel)	1
3	N48057	Chain - #40 x 81 Link W/Conn & Offset	1
		S10954 - Connector #40 Chain S10955 - Offset Connector #40 Chain (Not Shown)	
4	N50691	Rubber Draw Latch	1
5	N55783	Rear Transmission Weldment	1
6	D-5277	Lock Nut - 1/4 Serrated	4
7	S-5777	Chain - #40 x 84 Link W/Conn & Off	1
8	D-5259	Carriage Bolt - 5/16 x 3/4 Lg	10
9	D-5278	Lock Nut - 5/16 Serrated Flange	10
10	D-5279	Lock Nut - 3/8 Serrated Flange	2
11	D10747	Sprocket - 40B48	2
12	D17808	Sprocket Idler - 40A17	1
13	D17946	Sprocket - 40B12	1
14	N19706	Washer - 3/8 ID x 1 1/4 OD x 0.1 Thick	2
15	N53889	Flangette Bearing 1” Bore	5
16	**N72140**	**Hydraulic Motor - Danfoss OMPX-80 - 2021 to present (See Page 8-25)**	1
	N29319	Hydraulic Motor - DANFOSS DH80 - Prior to 2021	1
17	N29338	Sprocket - 40B24	1
18	N29341	Shaft-Slow Speed - 5 3/8 Lg	1
19	N29342	Shaft-Meter End - 13 13/16 Lg	1
20	N29371	Shim	1
21	N29375	Drive Pin - 5/16 x 1 1/2 (Groove)	1
22	N37219	Carriage Bolt - 3/8 x 4 1/2 Lg	1
23	N50842	Bushing - 0.385 ID x 5/8 OD x 3 1/4 Lg	1
24	N21055	U-Bolt - 1/4 x 3/4 x 1 3/8	1
25	P1318510	Hairpin - #19	1
26	N34961	Machine Screw - #10-24 x 3/4 Lg	4
27	S-752	Grease Fitting - 1/4 Straight	2
28	S10730	Key - 1/4 x 1/4 x 1 1/4 Lg	4
29	W-488	Hex Bolt - 1/2 x 2 Lg	2
30	W-514	Hex Nut - 3/8	1
31	W-516	Hex Nut - 1/2	2
32	W-523	Lockwasher - 3/8	1
33	W-525	Lockwasher - 1/2	2
34	N37787	Nylon Locknut - #10-24	4
35	N50678	Brace Plate	1
36	N51201	Upper Bracket	2
37	N62002	Chain Guard - Mid & Large Frame	1
38	W-469	Hex Bolt - 1/4 x 3/4 Lg	2
39	W-475	Hex Bolt - 3/8 x 1 Lg	2
40	N16853	Oillite Bushing	2
	N55162	Transmissions Assembly - Includes all items above	

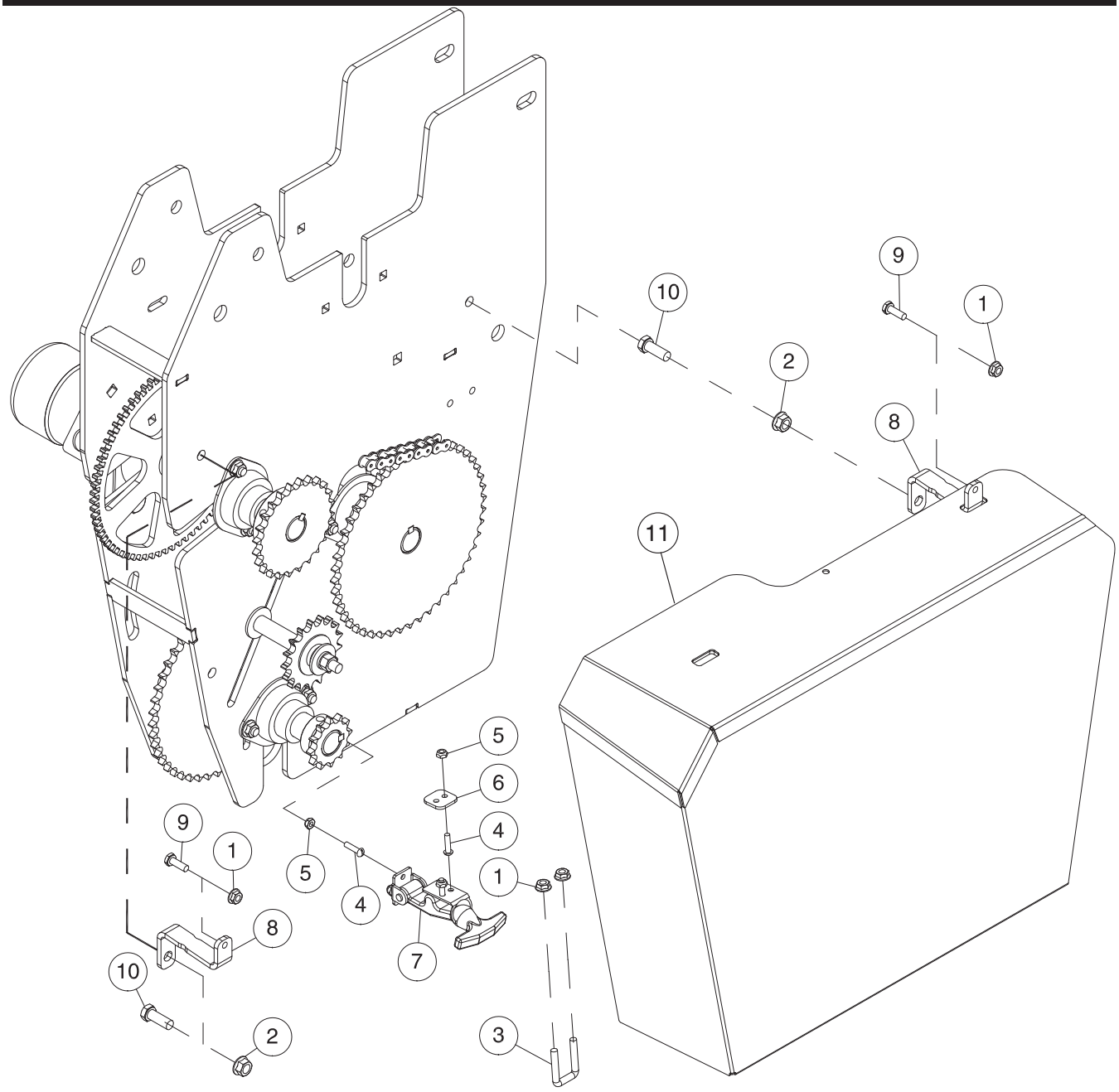

Item	Part No.	Description	Qty
1	D-5277	Lock Nut - 1/4 Serrated Flange	4
2	D-5279	Lock Nut - 3/8 Serrated Flange	2
3	N21055	U-Bolt - 1/4 x 3/4 x 1 3/8 UL	1
4	N34961	Machine Screw - #10-24 x 3/4 Lg	4
5	N37787	Nylon Locknut - #10-24	4
6	N50678	Brace Plate	1
7	N50691	Rubber Draw Latch	1
8	N51201	Upper Bracket	2
9	W-469	Hex Head - 1/4 x 3/4 Lg	2
10	W-475	Hex Bolt - 3/8 x 1 Lg	2
11	N62217	Chain Guard - Steel - Rear	
	N62354	Narrow Transport Rear Transmission assembly - Refer Pg. 8-22	1

Transmission Orbit Motor

IMPORTANT: Confirm with customer which series motor they have.

Danfoss has discontinued the DH80 orbit motor. Morris Part number N29319. (Seal Kit N48071)

The replacement motor is **Danfoss OMPX 80.** Morris Part number **N72140. (Seal Kit N72139)**

This is a running change for the 2021 production year starting with the serial numbers listed below:

9365 BD is 9365211872 and newer
9365 BT is 9363211433 and newer
9450 BD is 9450213965 and newer
9450 BT is 9453213433 and newer
9535 BD is 9535216851 and newer
9445 BD is 9445215876 and newer
9445 BT is 9443215395 and newer
9550 BD is 9550214893 and newer
9550 BT is 9553214375 and newer
9650 BD is 9650213012 and newer
9650 BT is 9653212432 and newer
9800 BD is 9800217896 and newer (includes 2 and 3 tank models)
9800 BT is 9803217387 and newer (includes 2 and 3 tank models)
91000 BD IS 91000218871 and newer (includes 2 and 3 tank models)

Note: It is possible to have both series motors on the same Air Cart, so check each motor to determine which seal kits are required.

2022 to present the **Patriot PHDRSY-80** motor has been used to fill any shortages of the Danfoss OMPX 80 motor.



Patriot PHDRSY-80.
Morris Part number **N72408.**
Seal Kit N72409



Danfoss OMPX 80
Morris Part number **N72140**
Seal Kit N72139



Danfoss DH 80
Morris Part number **N29319**
Seal Kit N48071

Notes

Section 9:
Metering System

Section Contents

9 Wide Metering 9-2
- Meter Body 9-2
- Meter Body - Access Door 9-4
- Double Shoot Collector Body 9-6
- Single Shoot Collector Body 9-8

10 Wide Metering 9-10
- Meter Body 9-10
- Meter Body - Access Door 9-12
- Double Shoot Collector Body 9-14
- Single Shoot Collector Body 9-16

Sample Collection Tray 9-18
- 9365, 9450 and 9535 9-18
- 9445, 9550 and 9650 9-19
- 9800 and 91000 9-20

Cleanout Shoot 9-22
Broadcast Collector Body - 9 Wide 9-23

9 Wide Metering
Meter Body

ICT metering is in ICT Section 21

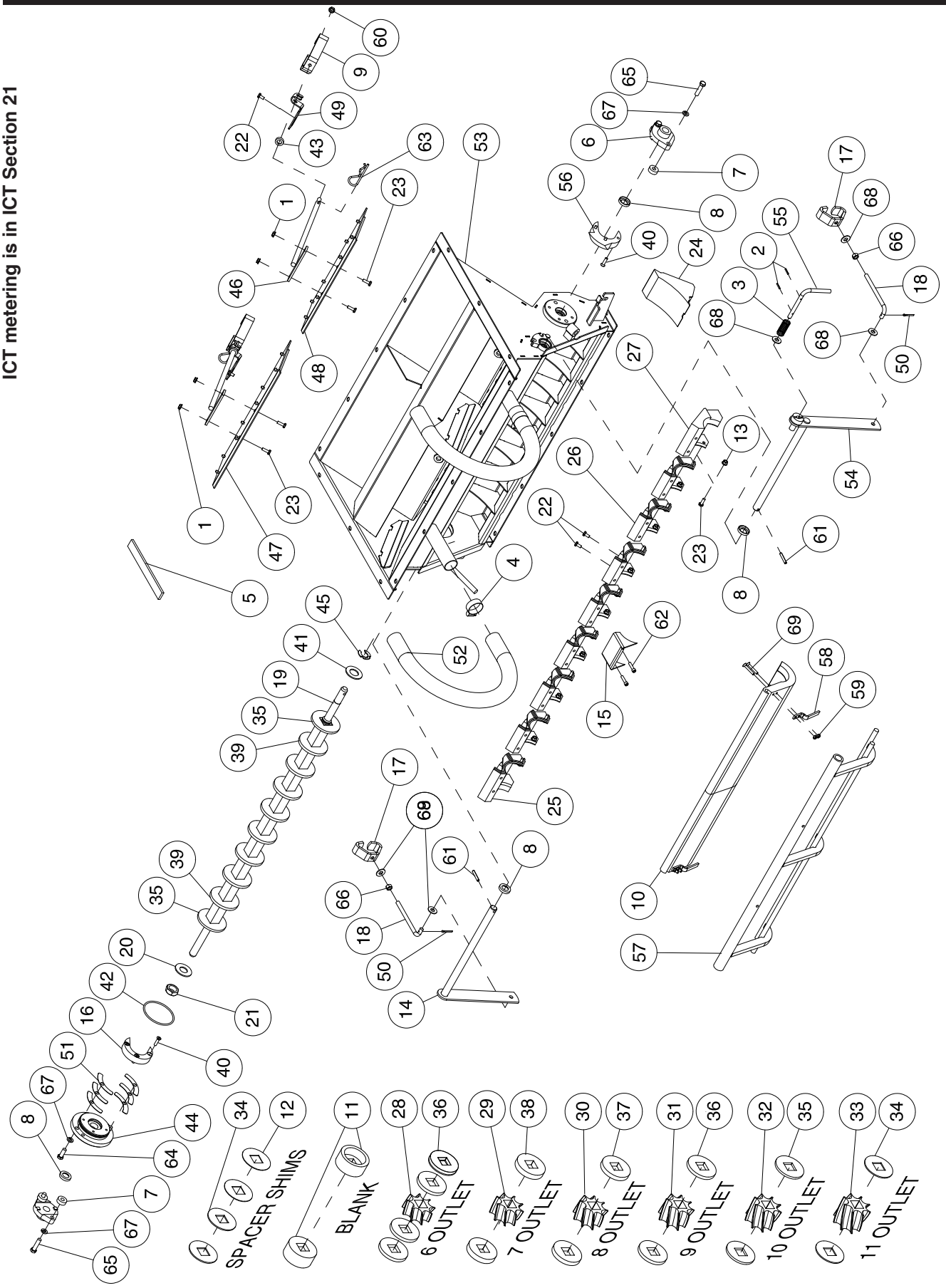

9 Wide Metering - Meter Body

Item	Part No.	Description	Qty
1	D-5277	Flange Lock Nut - 1/4 Serrated	4
2	N11457	Roll Pin - 1/8 Dia x 3/4 Lg	2
3	N11847	Spring	1
4	N11906	Hose Clamp - 1 1/2 Dia	2
5	N15716	Seal Strip - 1/4 x 1 Lg	9.2 ft
6	N19269	Flange Bearing	2
7	N21602	Spacer - 13/32 ID x 3/8 Thick	4
8	N71918	Seal - 3/4 ID x 1 1/4 OD x 1/4 Thick	4
9	N27350	Wing-Lock Nut - 3/8	2
10	N37696	Seed Plate - Coarse Seeds - polyurethane	1
	N40957	Seed Plate - Medium Seeds - polyurethane	1
	N40956	Seed Plate - Fine Seeds - polyurethane	1
11	N36106	Blank Wheel Spacer Half	2
12	N36110	Meterwheel Spacer - 1/16	2
13	N36143	Nylon Lock Nut - 1/4	8
14	N36435	Seed Plate Activator Handle	1
15	N42540	Blank Off	1
16	N36401	Spacer	1
17	N36425	Wing - Lock Nut - 3/8	2
18	N36427	Adjusting Rod	2
19	N36430	Metershaft	1
20	N36431	Washer - 7/8 ID Stainless Steel	1
21	N36432	Nylon Insert Hex Lock Nut - 7/8	1
22	N36556	Hex Bolt - 1/4 x 1/2 Lg - Stainless Steel	18
23	N36597	Hex Bolt - 1/4 x 3/4 Lg - Stainless Steel	12
24	N40980	Blank Off Plate	1
25	N36708	Backplate Left	1
26	N36709	Backplate Center	7
27	N36710	Backplate Right	1
28	N66886	Meter Wheel - 6 Outlet (1 1/2 wide)	1
29	N36717	Meter Wheel - 7 Outlet (1 3/4 wide)	1
30	N36718	Meter Wheel - 8 Outlet (2 wide)	1
31	N36719	Meter Wheel - 9 Outlet (2 1/4 wide)	1
32	N36720	Meter Wheel - 10 Outlet (2 1/2 wide)	1
33	N36721	Meter Wheel - 11 Outlet (2 3/4 wide)	1
34	N36731	Meter Wheel Spacer - 1/8	4
35	N36732	Meter Wheel Spacer - 1/4	4
36	N36733	Meter Wheel Spacer - 3/8	2
37	N36734	Meter Wheel Spacer - 1/2	2
38	N36735	Meter Wheel Spacer - 5/8	2
39	N36736	Meter Wheel Spacer - 5/16	8
40	N36738	Cap Screw - 1/4 - 20 UNC X 1 Lg	6
41	N36744	Washer - 1 ID Stainless Steel	1
42	N36748	O-Ring	1
43	N36766	Seal - 1/2 Shaft	2
44	N36774	End Plate	1
45	N36813	Retaining Ring - 1 Dia	1
46	N36945	Shutoff Handle	2
47	N36985	Shutoff Plate - Long	1
48	N36995	Shutoff Plate - Short	1
49	N37115	Retainer Clip	2
50	W-528	Cotter Pin - 1/8 x 1 Lg	2
51	N37210	Shim - Metering Body End Cap	6
52	N53173	Hose - 1 1/2 OD Goodyear x 36 inches	2
53	N40671	Meter Body	1
	N42140	Meter Body Assembly	
54	N40685	Seed Plate Activator Handle	1
55	N40688	Lock Pin - 3/8 Dia	1
56	N40805	Spacer	1
57	N40870	Seed Plate Activator	1
58	N40693	Clip - Seed Plate (per seed plate)	2
59	N22778	Locknut - 1/4 nylon insert (per seed plate)	4
60	S-748	Hex Jam Nut - 3/8	2
61	S-4781	Spring Pin - 1/4 x 1 1/2	2
62	N37339	Socket Head Capscrew - 1/4 x 1/2 Lg	2
63	W-131	Hairpin - #9	2
64	W-475	Hex Bolt - 3/8 x 1 Lg	2
65	W-477	Hex Bolt - 3/8 x 1 1/2 Lg	4
66	W21476	Two Way Locknut - 3/8	2
67	W-523	Lockwasher - 3/8	6
68	W-538	Washer - 7/16 ID x 1 OD x 14 Ga	5
69	N47416	Cap Screw - 1/4 x 1 3/4 Lg ss (per seed plate)	4
	N36259	Decal - "SHUT-OFF" (Not Shown)	2
	N21604	Decal - Important "Prevent Corrosion" (Not Shown)	1
		Required for Granular Herbicides	
	N37222	Seed Plate Seal - Left (Not Shown)	1
	N37223	Seed Plate Seal - Right (Not Shown)	1
	N19277	Elastomeric Sealant - White - 300 ml Tube - Prior to 2024	
	N72549	High Temp Sealant - 300 ml Tube - 2024 to Present	

ICT metering is in ICT Section 21

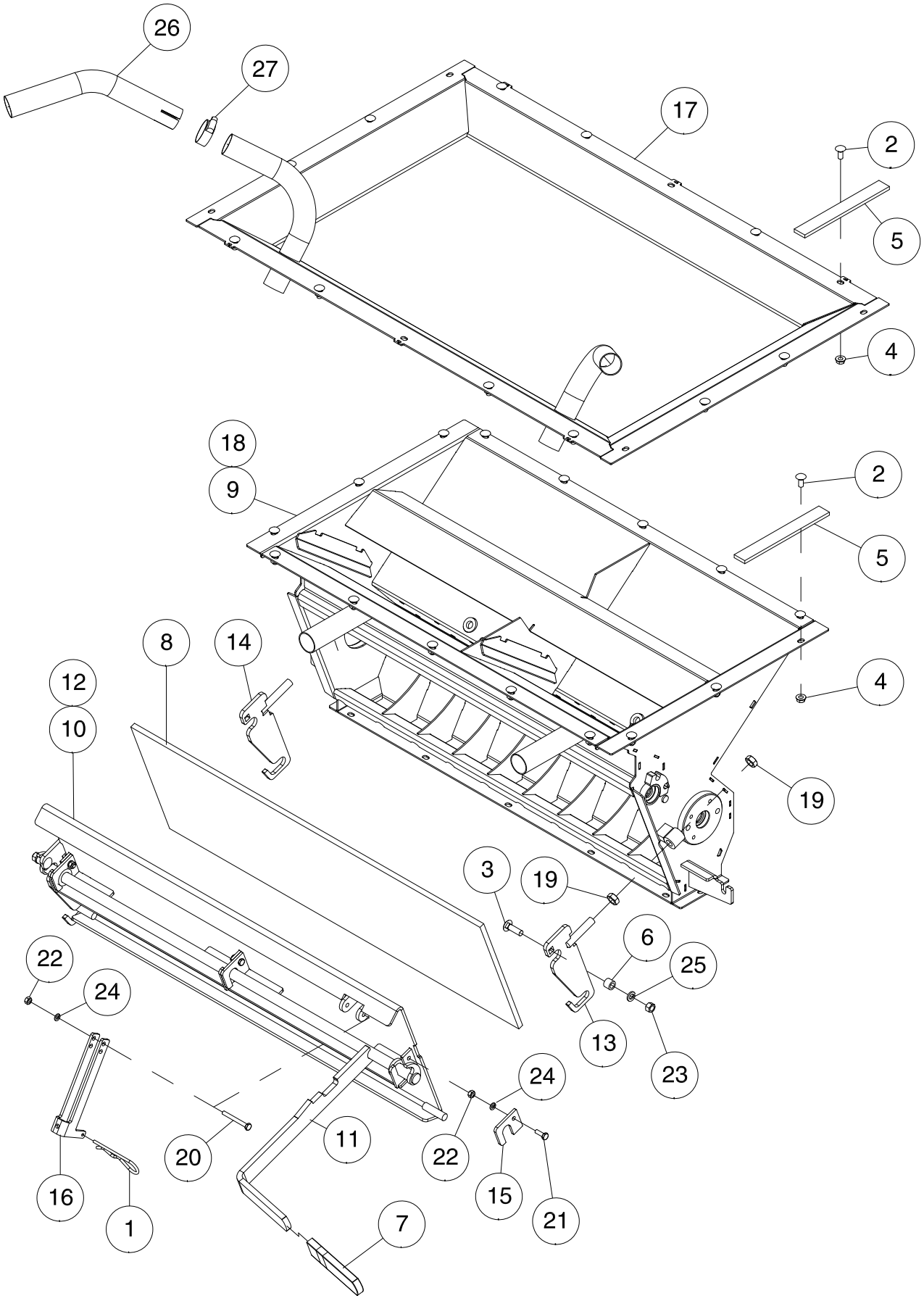

9 Wide Metering - Meter Body Access Door

Item	Part No.	Description	Qty
1	N53471	Quick Ping - 1/4	1
2	D-5259	Carriage Bolt - 5/16 x 3/4 Lg	28
3	D-5260	Carriage Bolt - 3/8 x 1 1/2 Lg	2
4	D-5278	Flange Lock Nut - 5/16	28
5	N15716	Seal Strip 1/4 x 1 (Bulk/Ft)	20.3ft
6	N19155	Spacer - 0.385 ID x 0.625 OD x 1/2 Lg	2
7	N32769	Handle Cover	1
8	N36130	Seal Strip - 3/8 x 10 3/4 Wide x 33 1/2 Lg (Bulk per foot)	1
9	N40671	Metering Body - 9 Wide	1
10	N48602	Access Door	1
11	N48604	Cam Shaft	1
12	N48606	Door Cam Lock Assembly	1
13	N48609	Clamp Assembly - Left	1
14	N48610	Clamp Assembly - Right	1
15	N48612	Bearing Plate	3
16	N48621	Handle Lock	1
17	N51250	Metering Body Extension - 9365 to 9650	1
	N53730	9800 Metering Body Extension (9 wide)	1
18	N51280	Meter Body (contains all items) - 9 Wide	1
19	S-1292	Hex Jam Nut - 1/2	4
20	S45280	Hex Bolt - 1/4 x 2 1/4 Lg	1
21	W-469	Hex Head - 1/4 x 3/4 Lg	3
22	W-512	Hex Nut - 1/4	4
23	W-514	Hex Nut - 3/8	2
24	W-521	Lockwasher - 1/4	4
25	W-523	Lockwasher - 3/8	2
26	N71740	Pressurization Pipe Extension - 10 1/8 Height	2
	N73311	Pressurization Pipe Extension - 17 5/16 Height	
27	N11906	Hose Clamp Stainless - 1 1/2 Dia	2

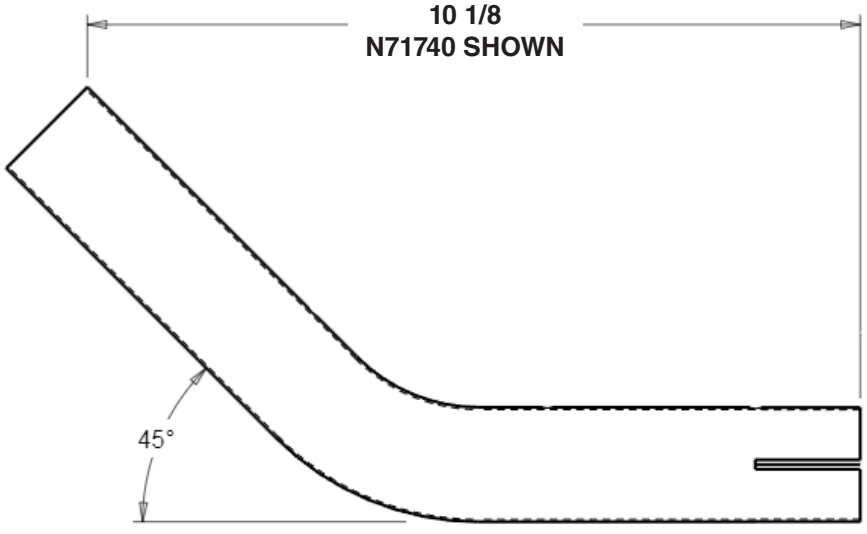

9 Wide Metering
Double Shoot Collector Body

ICT metering is in ICT Section 21

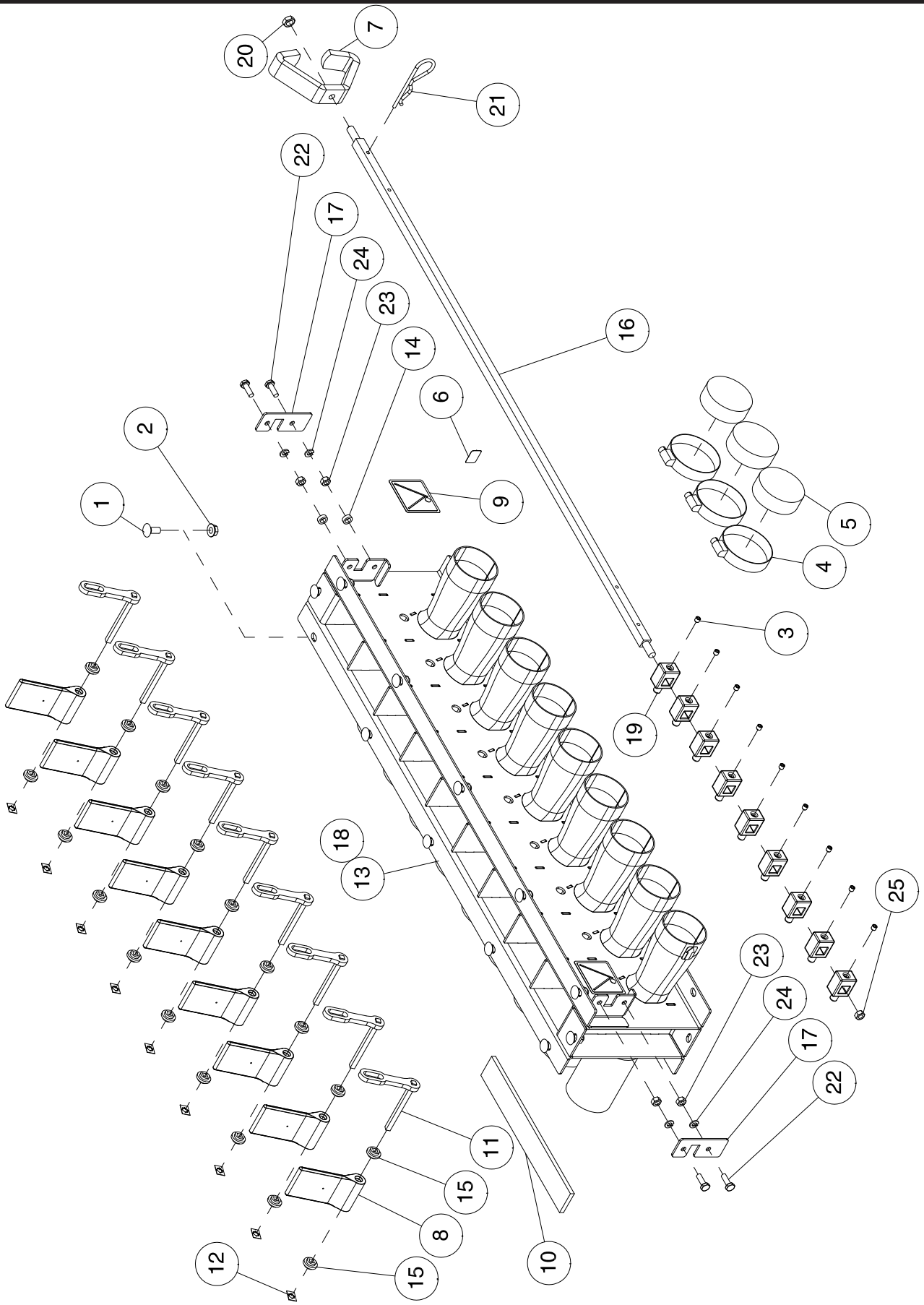

9 Wide Metering - Double Shoot Collector Body

Item	Part No.	Description	Qty
1	D-5259	Carriage Bolt - 5/16 x 3/4 Lg	12
2	D-5278	Flange Lock Nut - 5/16	12
3	N59895	Set Screw - 1/4 x 1/2	9
4	N11905	Hose Clamp - HS-44	3
5	N11907	Plastic Cap	3
6	N19000	Decal - “Air Flow”	2
7	N27350	Wing-Lock Nut - 3/8	1
8	N36114	Collector Valve	9
9	N36265	Decal - Double Shoot Valve	2
10	N37190	Seal Strip - 1/4 X 1 3/8	6.4ft
11	N37646	Flapper Handle Assembly	9
12	N42163	Bolt Retainer	9
13	N37700	Double Shoot Collector - Stainless Steel	1
14	N37888	Spacer Bushing - 1/2 OD x .310 ID	2
15	N37917	Zytel Bushing	18
16	N60953	Control Rod	1
	N60954	Control Rod - Blend (Australia Only)	1
17	N37942	Bracket	2
18	N44135	Dual Shoot Collector Assembly	1
	N42195	Dual Shoot Collector Assembly - Blend (Australia Only)	1
19	N37957	Drive Connector - 1/2	9
20	S-748	Hex Jam Nut - 3/8	1
21	S33598	Hairpin - #10	1
22	W-469	Hex Head - 1/4 x 3/4 Lg	4
23	W-512	Hex Nut - 1/4	4
24	W-521	Lockwasher - 1/4	4
25	N44137	Nylon Cap Nut - 3/8	1
		For Blank Off runs replace Items 11 & 12 with the following items	
	H-4696	Bolt - 1/4 x 3 LG	As req
	N42510	Flange Lock Nut - 1/4 W/Center Lock	As req

9 Wide Metering
Single Shoot Collector Body

Collector handle should be mounted on left side of Cart.

Tow Behind orientaion shown.

ICT metering is in ICT Section 21

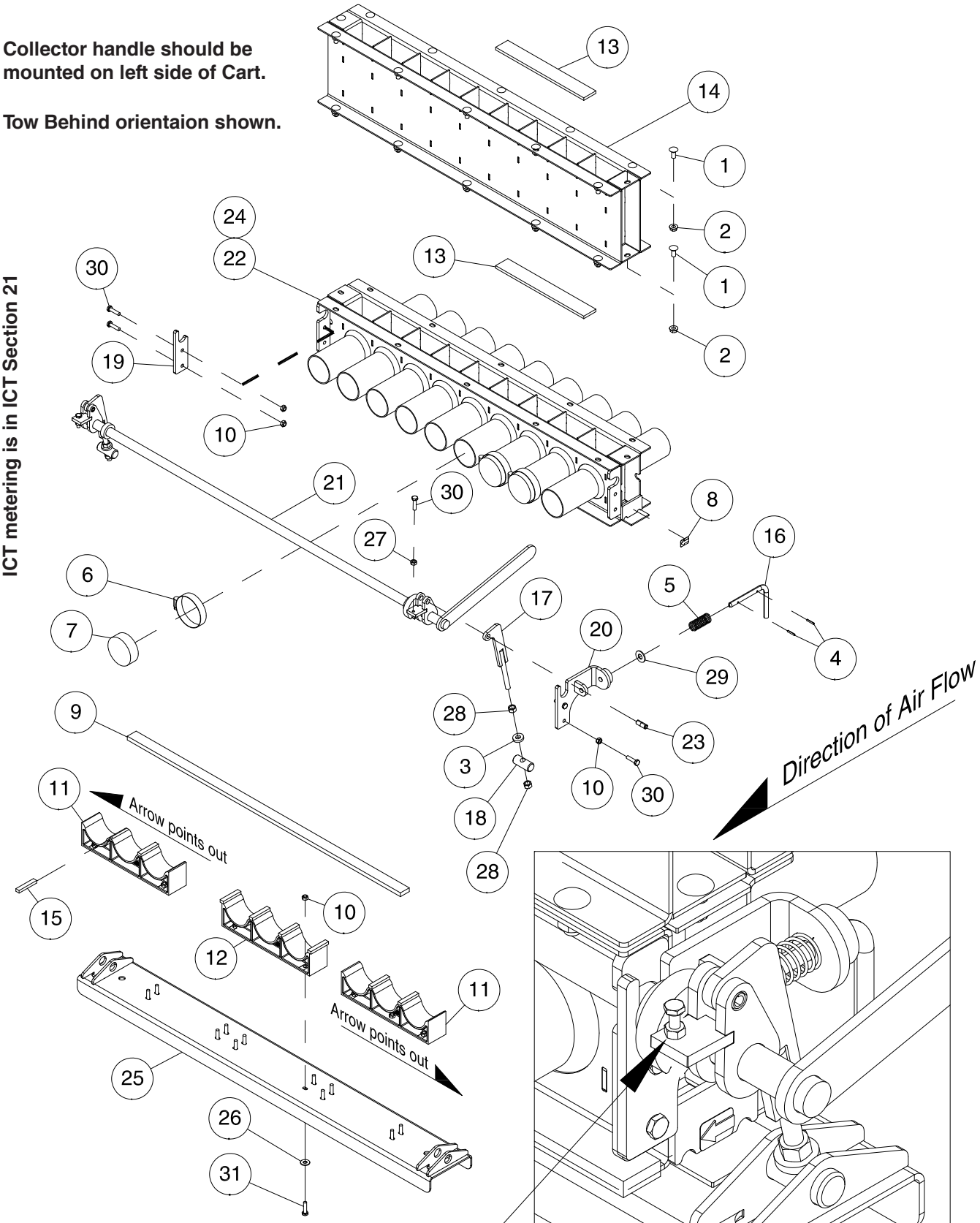

Assemble Bolt and Jam Nut so that there is a $\frac{1}{2}$" gap between the top of the Bolt and the surface of the plate.

9 Wide Metering - Single Shoot Collector Body

Item	Part No.	Description	Qty
1	D-5259	Carriage Bolt - 5/16 x 3/4 Lg	24
2	D-5278	Flange Lock Nut - 5/16	24
3	D-5500	Washer - 3/8 ID x 7/8 OD x 7Ga.	2
4	N11457	Roll Pin - 1/8 Dia x 3/4 Lg	2
5	N11847	Spring - 19/32 ID x 0.7188 OD x 1 3/4 Lg	1
6	N11905	Hose Clamp - 2 1/2	3
7	N11907	Plastic Cap - 2 1/2 ID	3
8	N19000	Decal - Air Flow	2
9	N19449	Seal Strip - 3/8 x 1 x 2.583 Ft	8.4ft
10	N22778	Locknut - 1/4 Nylon Insert	16
11	N36266	False Bottom Cups - Left And Right	2
12	N36267	False Bottom Cups - Middle	1
13	N37190	Seal Strip - 1/4 X 1 3/8	12.8ft
14	N37865	Collector SS - Spacer	1
15	N37944	Seal Strip - 3/8 x 2	8
16	N40688	Lock Pin - 3/8 Dia	1
17	N51440	Cleanout Door Link	2
18	N51441	Pin - Cleanout Door Link - 3/4 Dia x 1 3/4 Lg	2
19	N51444	Mount-Right Side Cleanout Door	1
20	N51445	Mount- Left Side Cleanout Door	1
21	N51500	Crank - Lower Cleanout Door	1
22	N51503	Collector SS - Single Shoot	1
23	N53014	Coiled Spring Pin - 3/8 x 1 Lg	2
24	* * * * *	Single Shoot Collector Assembly - Tow Behind Shown	1
25	N53018	Lower Cleanout Door SS	1
26	S-1198	Washer - 5/16 ID x 3/4 OD x .065	12
27	W-512	Hex Nut - 1/4	2
28	W-514	Hex Nut - 3/8	4
29	W-538	Washer - 7/16 ID x 1 OD x 14 Ga	1
30	W-1552	Hex Bolt - 1/4 x 1 Lg	6
31	W-469	Hex Bolt - 1/4 x 3/4 Lg	12

10 Wide Metering
Meter Body

ICT metering is in ICT Section 21

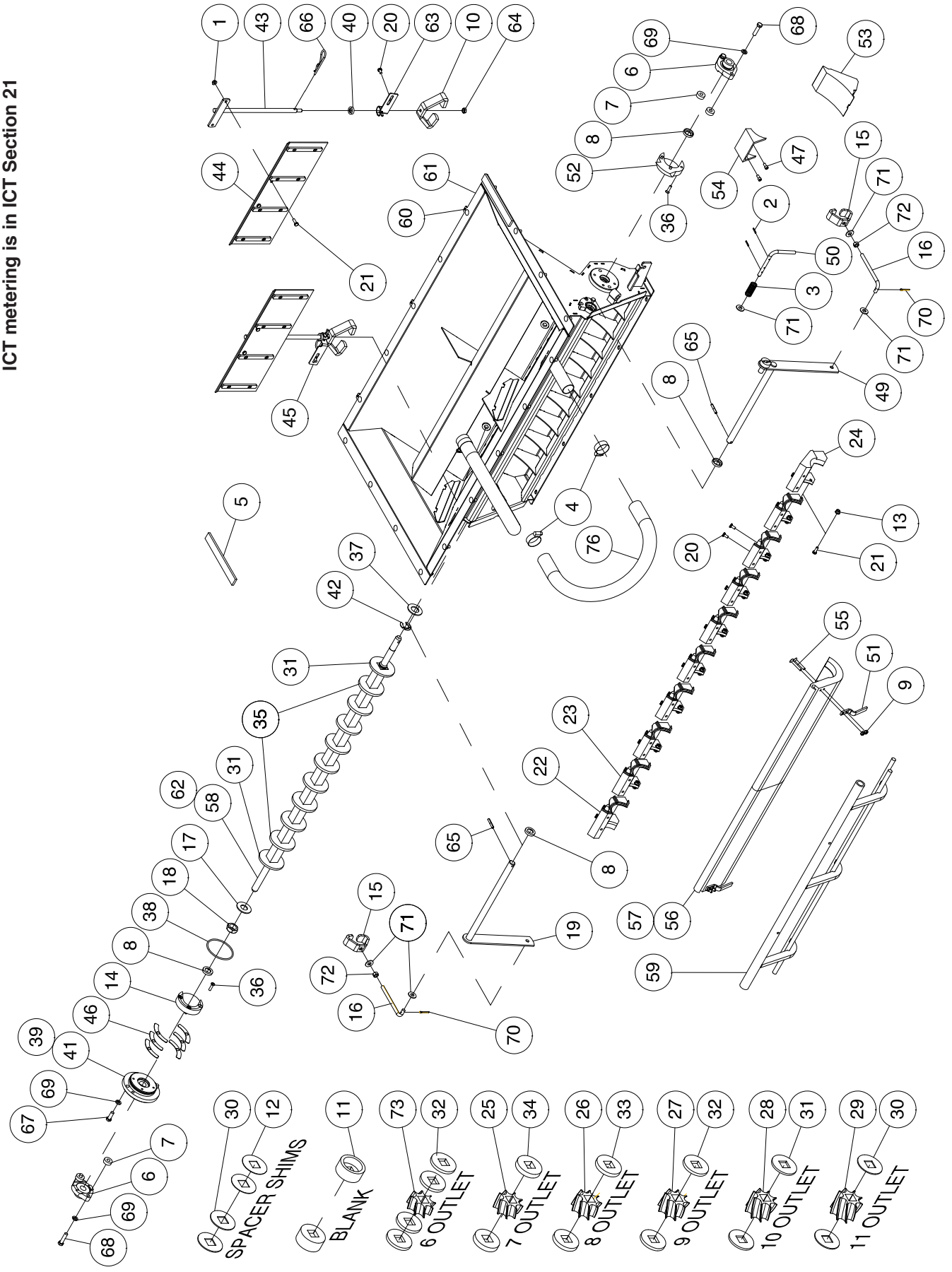

Item	Part No.	Description	Qty
1	D-5277	Flange Lock Nut - 1/4 Unc Serrated	4
2	N11457	Roll Pin - 1/8 Dia x 3/4 Lg	2
3	N11847	Spring - 16 Ga Closed Left Hand Coil	1
4	N11906	Hose Clamp Stainless- 1 1/2 Dia	2
5	N15716	Seal Strip 1/4 x 1 (Bulk/Ft)	1
6	N19269	Flange Bearing	2
7	N21602	Spacer - 13/32 ID x 3/8 Thick	4
8	N71918	Seal - 3/4 ID x 1 1/4 OD x 1/4 Thick	4
9	N22778	Locknut - 1/4 Nylon Insert	4
10	N27350	Wing Lock Nut - 3/8	2
11	N36106	Blank Wheel Spacer Half	2
12	N36110	Meterwheel Spacer 0.0625	4
13	N36143	Nylon Lock Nut - 1/4	9
14	N36401	End Relief Spacer	1
15	N36425	Wing Lock Nut - 3/8	2
16	N36427	Adjusting Rod	2
17	N36431	Washer - 7/8 ID Stainless Steel	1
18	N36432	Nylon Locknut - 7/8	1
19	N36435	Seed Plate Activator Handle	1
20	N36556	Hex Bolt - 1/4 x 1/2 Lg	20
21	N36597	Hex Bolt - 1/4 x 3/4 Lg	13
22	N36708	Backplate Left	1
23	N36709	Backplate Center	8
24	N36710	Backplate Right	1
25	N36717	Meter Wheel - 7 Outlet (1 3/4 wide)	1
26	N36718	Meter Wheel - 8 Outlet (2 wide)	1
27	N36719	Meter Wheel - 9 Outlet (2 1/4 wide)	1
28	N36720	Meter Wheel - 10 Outlet (2 1/2 wide)	1
29	N36721	Meter Wheel - 11 Outlet (2 3/4 wide)	1
30	N36731	Meterwheel Spacer - 1/8	6
31	N36732	Meterwheel Spacer - 1/4	4
32	N36733	Meterwheel Spacer - 3/8	2
33	N36734	Meterwheel Spacer - 1/2	2
34	N36735	Meterwheel Spacer - 5/8	2
35	N36736	Meterwheel Spacer - 5/16	9
36	N36738	Cap Screw - 1/4 - 20 Unc x 1 Lg	6
37	N36744	Washer - 1 ID x 1 7/8 OD Stainless Steel	1
38	N36748	O-Ring	1
39	N36749	Bearing Assembly - (8, 14, 36, 38, 41, 67 & 69)	1
40	N36766	Seal - 1/2 In Shaft	2
41	N36774	End Plate	1
42	N36813	Retaining Ring - 1 Dia	1
43	N36945	Shutoff Handle	2
44	N36985	Shutoff Plate - Long	2
45	N37115	Retainer Clip	1
46	N37210	Shim - Metering Body End Cap	6
47	N37339	Socket Head Capscrew - 1/4 x 1/2 Lg	2
48	N38662	Presurization Hose - 1 1/2 OD	2
49	N40685	Seed Plate Activator Handle	1
50	N40688	Lock Pin - 3/8 Dia	1
51	N40693	Seed Plate Clip	2
52	N40805	End Relief Spacer	1
53	N40980	Blank Run Cover	1
54	N42540	Blank-Off 1 Wide	1
55	N47416	Flat Socket Cap Screw - 1/4 x 1-3/4	4
56	N51703	Seed Plate - Coarse	1
	N51704	Seed Plate - Medium	
	N51705	Seed Plate - Fine	
57	N51713	Coarse Seed Plate Assembly - (9, 51, 55 & 56)	1
	N51714	Medium Seed Plate Assembly - (9, 51, 55 & 56)	
	N51715	Fine Seed Plate Assembly - (9, 51, 55 & 56)	
58	N51775	Metershaft	1
59	N51785	Seed Plate Activator	1
60	N51871	Meterbody - 10 Outlet	1
61	N51880	Meterbody Assembly	1
62	N51881	Metershaft - Blank Assy	1
63	N55955	Retainer Clip - Meterbody Shut Off	1
64	S-748	Hex Jam Nut - 3/8	2
65	S-4781	Spring Pin - 1/4 x 1 1/2	2
66	W-131	Hairpin - 5/32	2
67	W-475	Hex Bolt - 3/8 x 1 Lg.	2
68	W-477	Hex Bolt - 3/8 x 1 1/2 Lg	4
69	W-523	Lockwasher - 3/8	6
70	W-528	Cotter Pin - 1/8	2
71	W-538	Washer - 7/16 ID x 1 OD x 14 Ga	5
72	W21476	Two Way Locknut - 3/8	2
73	N66886	Meter Wheel - 6 Outlet (1 1/2 wide)	1
	N36259	Decal - “SHUT-OFF” (Not Shown)	2
	N21604	Decal - Important “Prevent Corrosion” (Not Shown)	1
		Required for Granular Herbicides	
	N37222	Seed Plate Seal - Left (Not Shown)	1
	N37223	Seed Plate Seal - Right (Not Shown)	1
	N19277	Elastomeric Sealant - White - 300 ml Tube - Prior to 2024	
	N72549	High Temp Sealant - 300 ml Tube - 2024 to Present	

10 Wide Metering
Meter Body - Access Door

ICT metering is in ICT Section 21

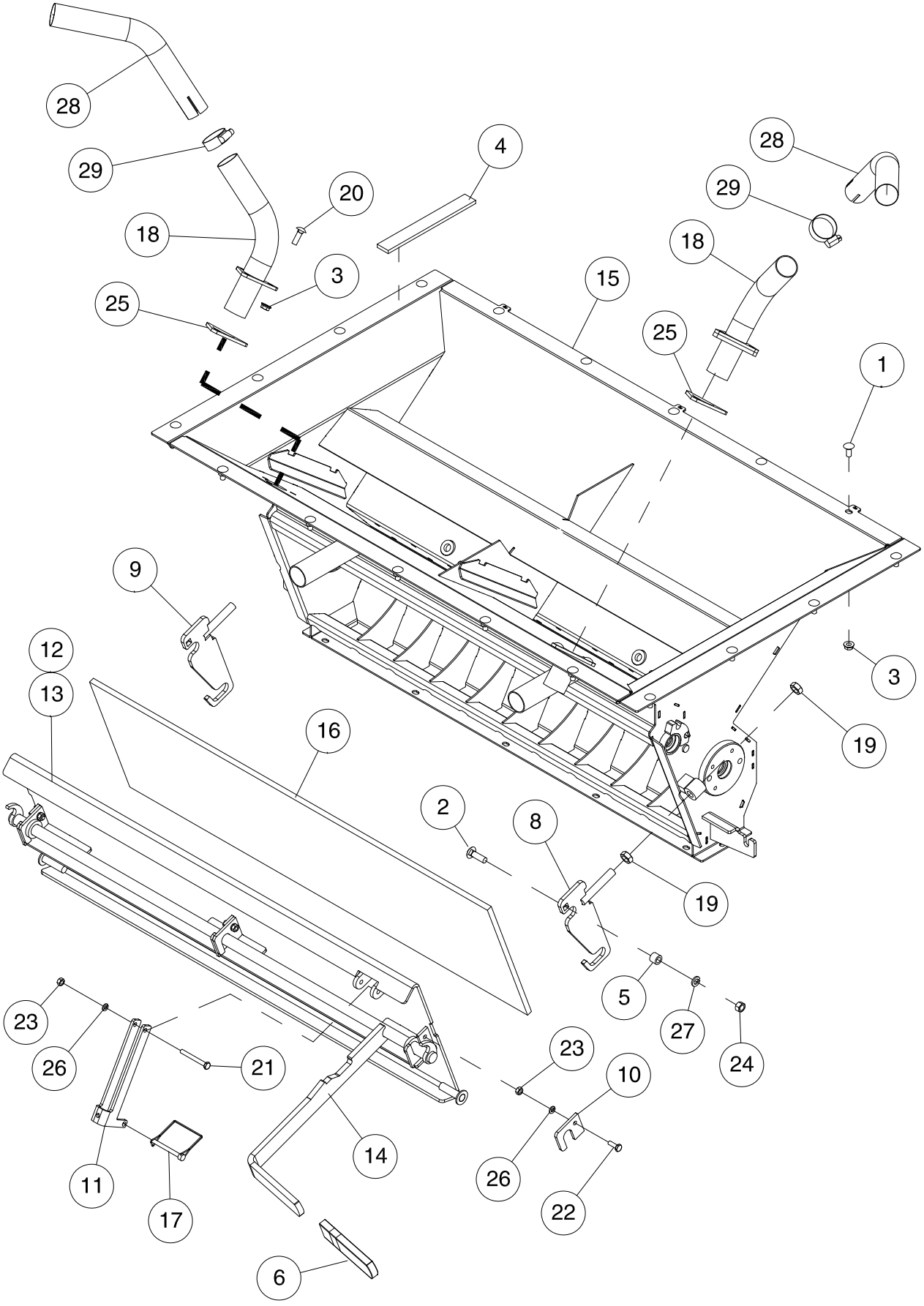

10 Wide Metering - Meter Body Access Door

Item	Part No.	Description	Qty
1	D-5259	Carriage Bolt - 5/16 x 3/4 Lg	18
2	D-5260	Carriage Bolt - 3/8 x 1-1/2 Lg	2
3	D-5278	Flange Lock Nut - 5/16	24
4	N15716	Seal Strip 1/4 x 1 (Bulk/Ft)	1
5	N19155	Spacer - 0.385 ID x 0.625 OD	2
6	N32769	Handle Cover	1
7	N36749	Right Bearing Assembly	1
8	N48609	Clamp Assembly - Left	1
9	N48610	Clamp Assembly - Right	1
10	N48612	Bearing Plate	3
11	N48621	Lock Part	1
12	N51781	Acess Door Assembly - 10 Outlet	1
13	N51782	Cleanout Door - 10 Outlet	1
14	N51784	Actuator Arm - 10 Outlet	1
15	N51871	Meterbody - 10 Outlet	1
16	N51875	Seal Strip Access Door - 3/8 x 10 3/4 x 36 3/8 Lg **(Use N36130 Bulk per foot)**	1
17	N53471	Quick Pin - 1/4	1
18	N55525	Connector - Pressurization	2
19	**S-1292**	**Hex Jam Nut - 1/2**	**4**
20	S33420	Carriage Bolt - 5/16 x 1 Lg	6
21	S45280	Hex Bolt - 1/4 x 2-1/4 Lg	1
22	W-469	Hex Head - 1/4 x 3/4 Lg	3
23	W-512	Hex Nut - 1/4	4
24	W-514	Hex Nut - 3/8	2
25	**N55090**	**Seal Strip - Equalizer Tube**	**2**
26	W-521	Lockwasher - 1/4	4
27	W-523	Lockwasher - 3/8	2
28	N71740	Pressurization Pipe Extension - 10 1/8 Height	2
	N73311	Pressurization Pipe Extension - 17 5/16 Height	
29	N11906	Hose Clamp Stainless - 1 1/2 Dia	2

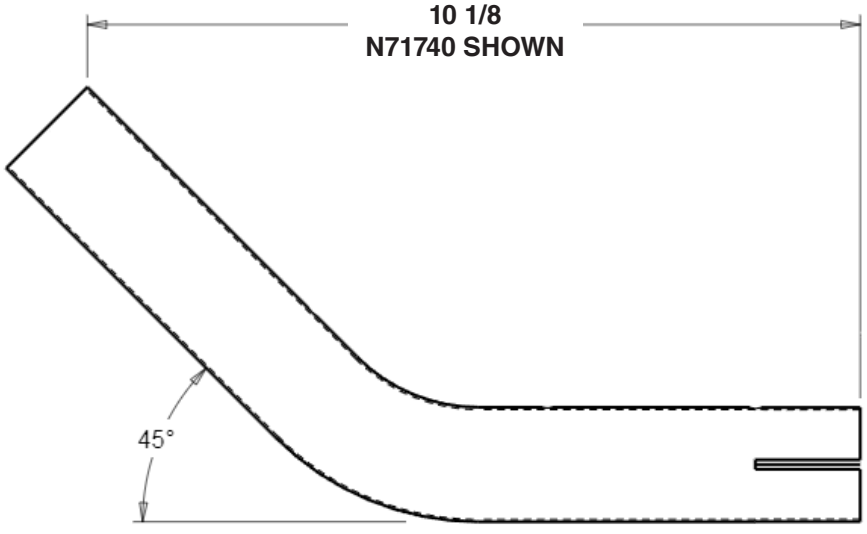

10 Wide Metering
Double Shoot Collector Body

ICT metering is in ICT Section 21

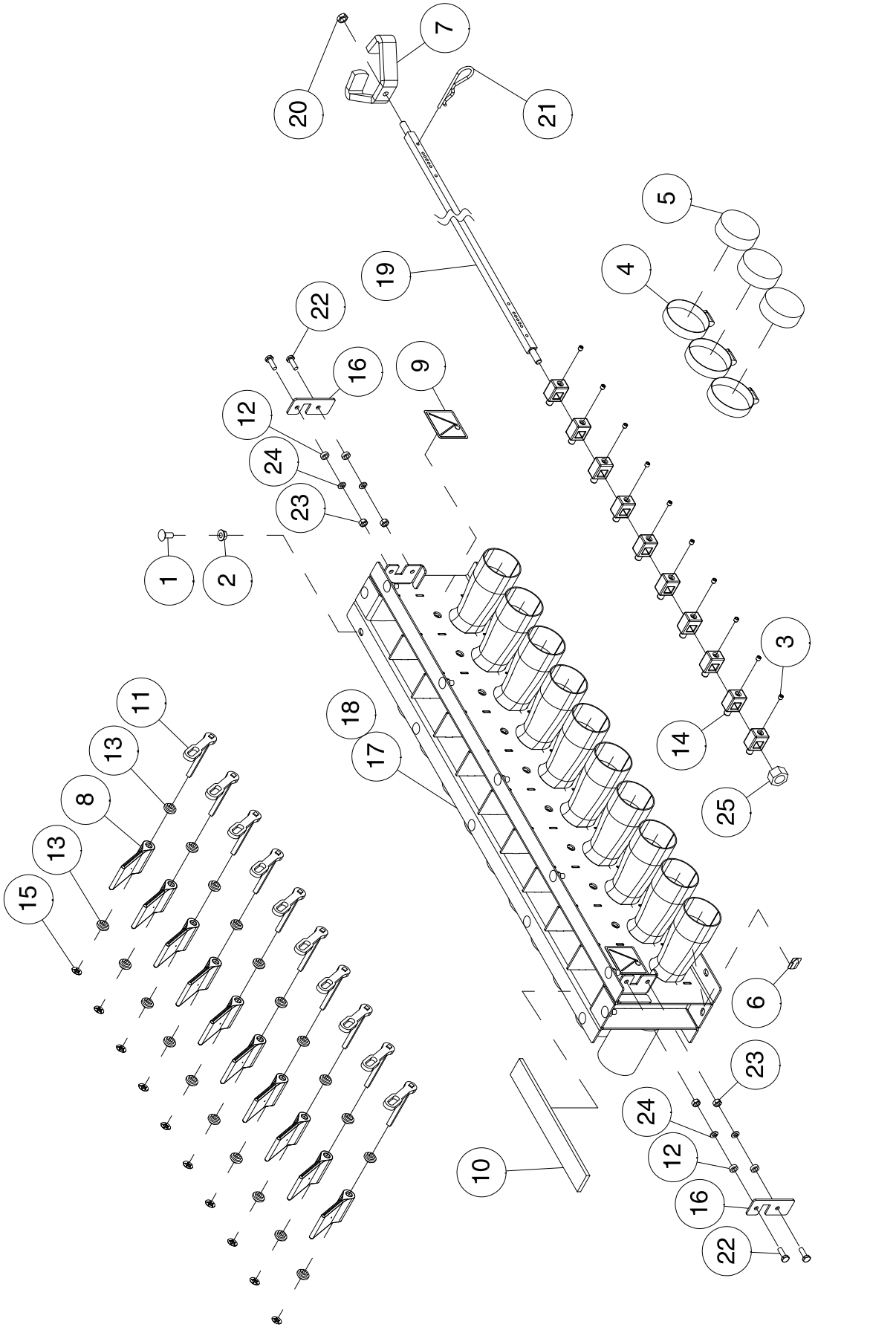

10 Wide Metering - Double Shoot Collector Body

Item	Part No.	Description	Qty
1	D-5259	Carriage Bolt - 5/16 x 3/4 Lg	12
2	D-5278	Flange Lock Nut - 5/16	12
3	N59895	Set Screw - 1/4 x 1/2	10
4	N11905	Hose Clamp - 2 1/2	3
5	N11907	Plastic Cap - 2 1/2 ID	3
6	N19000	Decal - Air Flow	2
7	N27350	Wing-Lock Nut - 3/8	1
8	N36114	Collector Valve	10
9	N36265	Decal - Double Shoot Valve	2
10	N37190	Seal Strip	1
11	N37646	Flapper Handle Assembly	10
12	N37888	Spacer Bushing - .5 OD x .310 ID	4
13	N37917	Zytel Bushing	20
14	N37957	Drive Connector - 1/2"	10
15	N42163	Bolt Retainer	10
16	N50320	Bracket SS	2
17	N51740	Collector SS - Dual Shoot	1
18	N51745	Double Shoot Collector Assembly	1
	N56745	Double Shoot Collector Assembly - Blend (Australia Only)	1
19	N60957	Control Rod SS - Collector	1
	N60958	Control Rod SS - Collector - Blend (Australia Only)	1
20	S-748	Hex Jam Nut - 3/8	1
21	S33598	Hairpin - #10	1
22	W-469	Hex Head - 1/4 x 3/4 Lg	4
23	W-512	Hex Nut - 1/4	4
24	W-521	Lockwasher - 1/4	4
25	N44137	Nylon Cap Nut - 3/8	1
		For Blank Off runs replace Items 11 & 12 with the following items	
	H-4696	Bolt - 1/4 x 3 LG	As req
	N42510	Flange Lock Nut - 1/4 W/Center Lock	As req

10 Wide Metering
Single Shoot Collector Body

Collector handle should be mounted on left side of Cart.

Tow Behind orientaion shown.

ICT metering is in ICT Section 21

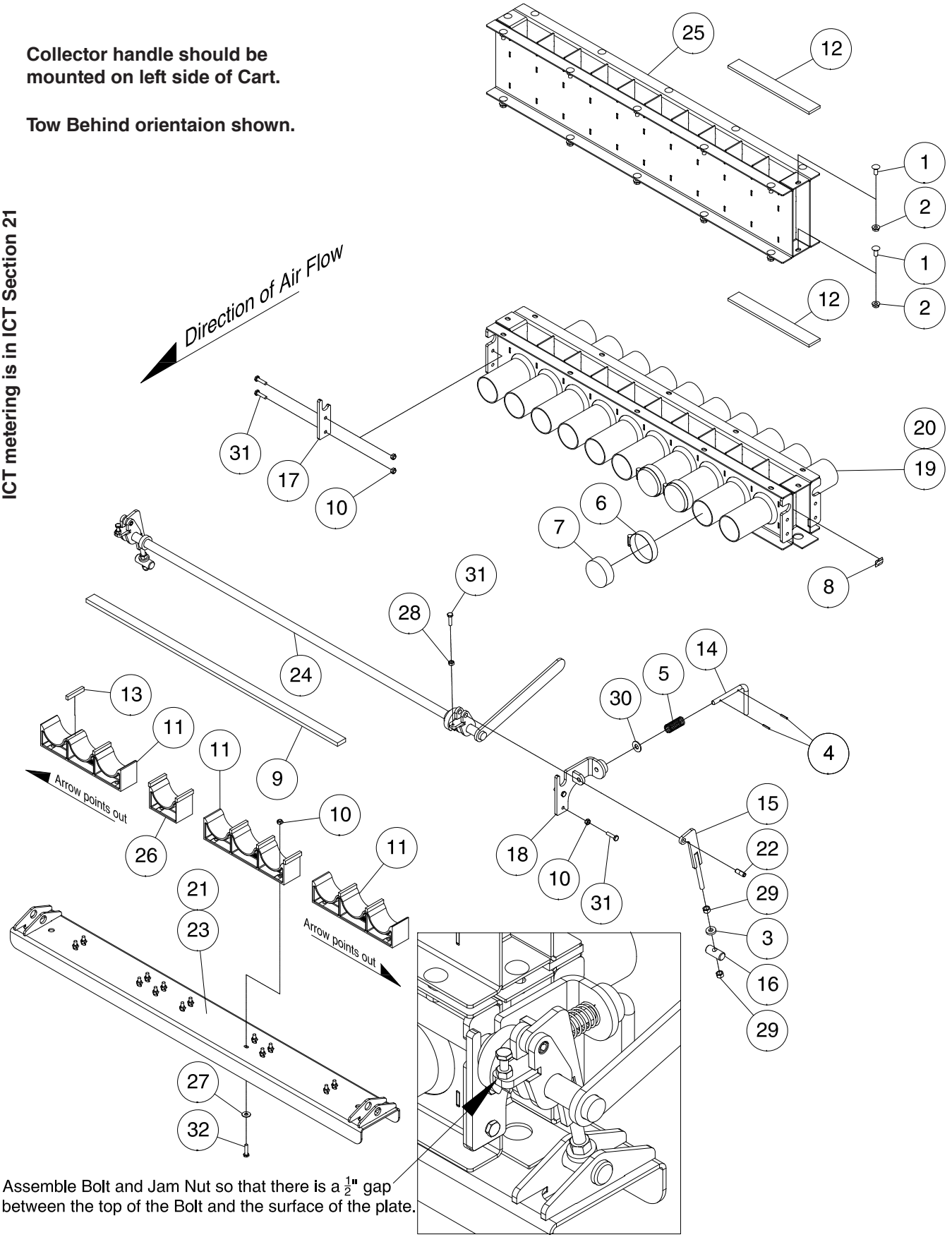

Assemble Bolt and Jam Nut so that there is a $\frac{1}{2}$" gap between the top of the Bolt and the surface of the plate.

10 Wide Metering - Single Shoot Collector Body

Item	Part No.	Description	Qty
1	D-5259	Carriage Bolt - 5/16 x 3/4 Lg	24
2	D-5278	Flange Lock Nut - 5/16	24
3	D-5500	Washer - 3/8 ID x 7/8 OD x 7Ga.	2
4	N11457	Roll Pin - 1/8 Dia x 3/4 Lg	2
5	N11847	Spring	1
6	N11905	Hose Clamp - 2 1/2 Dia	3
7	N11907	Plastic Cap - 2 1/2 ID	3
8	N19000	Decal - Air Flow	2
9	N19449	Seal Strip 3/8 x 1 x 2.583 Ft	1
10	N22778	Locknut - 1/4 Nylon Insert	18
11	N36266	False Bottom Cups	3
12	N37190	Seal Strip	2
13	N37944	Seal Strip - 3/8"	9
14	N40688	Lock Pin - 3/8 Dia	1
15	N51440	Cleanout Door Link	2
16	N51441	Pin - Cleanout Door Link - 3/4 Dia x 1 3/4 Lg	2
17	N51444	Mount-Rightside Cleanout Door	1
18	N51445	Mount- Leftside Cleanout Door	1
19	N51750	Single Shoot SS Collector	1
20	* * * * *	Single Shoot Collector - 10 Run Assembly - Tow Behind Shown	1
21	N51766	Bottom Assembly - Quick Release	1
22	N53014	Spiral Pin - 3/8 x 1 Lg	2
23	N53070	Lower Cleanout Door SS	1
24	N53072	Crank - Lower Cleanout Door	1
25	N55466	Spacer SS - Collector	1
26	N56462	False Bottom Cup	1
27	S-1198	Washer - 5/16 ID x 3/4 OD x .065	14
28	W-512	Hex Nut - 1/4	2
29	W-514	Hex Nut - 3/8	4
30	W-538	Washer - 7/16 ID x 1 OD x 14 Ga	1
31	W-1552	Hex Bolt - 1/4 x 1 Lg	6
32	W-469	Hex Bolt - 1/4 x 3/4 Lg	14

Sample Collection Tray
9365, 9450 and 9535

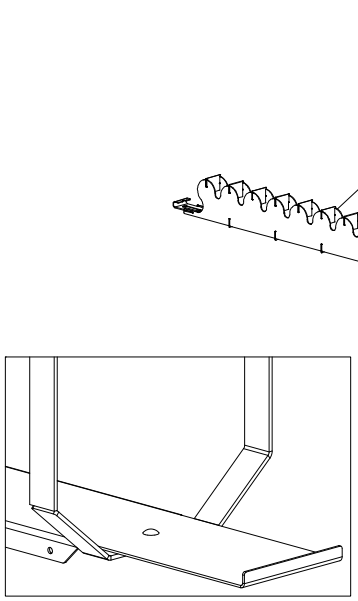

Mount Brackets to the Underside of the Bottom Plate

Item	Part No.	Description	Qty
1	D-5265	Carriage Bolt - 1/2 x 1 Lg	1
2	N19563	Tie Strap	1
3	N36120	Sample Collection Tray	1
	N58900	Sample Collection Tray - ICT with 520 Dual Tire Kit	
4	N36287	Digital Scale	1
5	N37182	Bottom Plate	1
6	N37183	Bracket	2
7	N37829	Sampe Tray Strap	1
8	N37907	Flange Lock Nut - 1/2 W/Center Lock	1
9	**N50869**	Slider Clip	1
10	N37911	Cavity Rate Calibration Insert	1
10A	N50740	**ICT** Cavity Rate Calibration Insert	
11	N37912	Rate Calitbration Assembly - Includes Items 1, 8, 9, 10	1
	N50742	**ICT** Rate Callibration Insert Assembly - 9 Wide - Includes Items 1, 8, 9, 10A	1
12	P7C616	Carriage Bolt - 3/8 x 1	2
13	S33420	Carriage Bolt - 5/16 x 1 Lg	2
14	W-513	Hex Nut - 5/16	2
15	W-514	Hex Nut - 3/8	3
16	W-522	Lockwasher - 5/16	2
17	W-523	Lockwasher - 3/8	4

Sample Collection Tray
9445, 9550 and 9650 - Prior to 2016

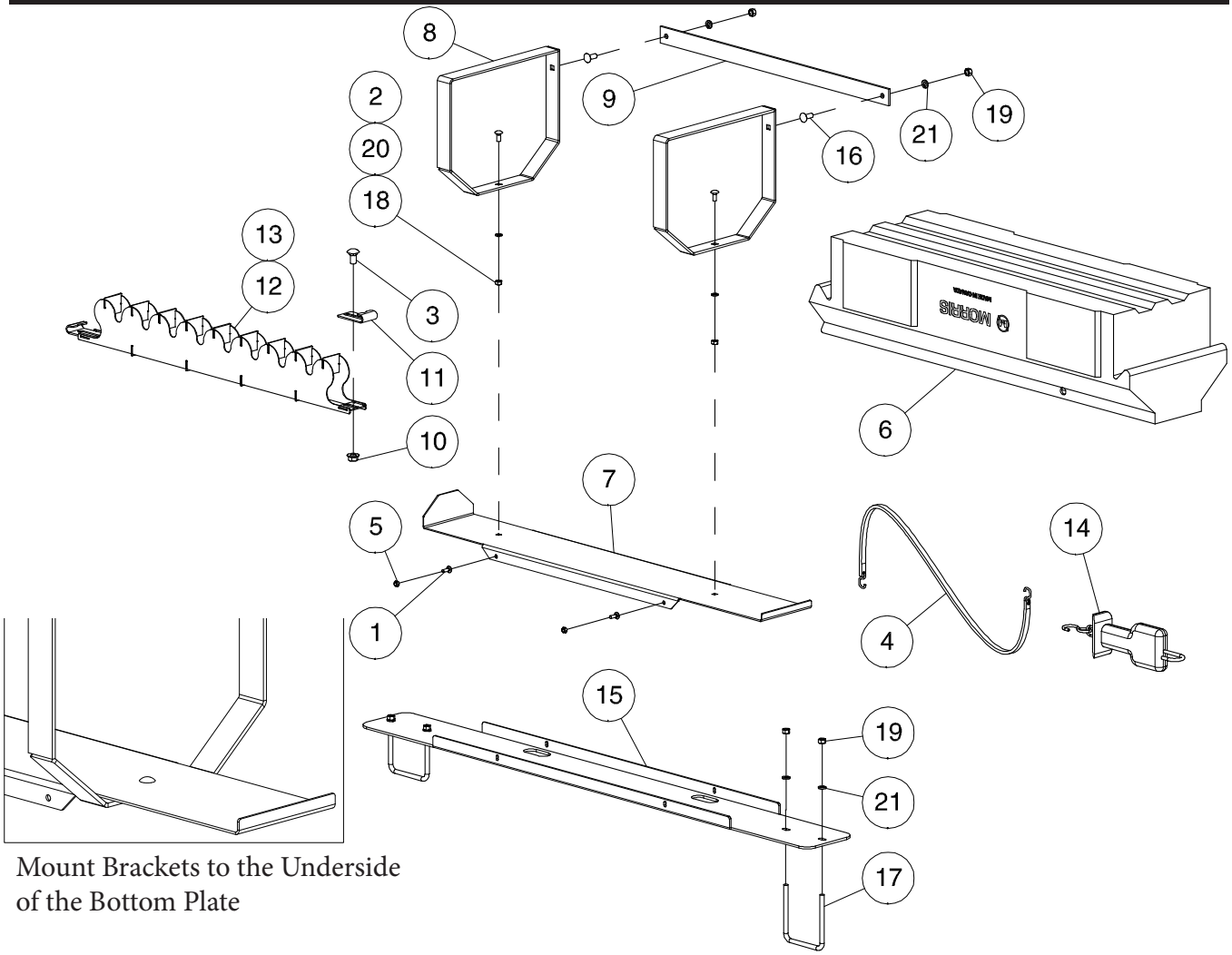

Mount Brackets to the Underside of the Bottom Plate

Item	Part No.	Description	Qty
1	D-5258	Carriage Bolt 1/4 x 3/4 Lg	4
2	D-5259	Carriage Bolt - 5/16 x 3/4 Lg	2
3	D-5265	Carriage Bolt - 1/2 x 1 Lg	1
4	N19563	Tie Down Strap	1
5	N22778	Locknut - 1/4 Nylon Insert	4
6	N36120	Sample Collection Tray	1
7	N37182	Bottom Plate	1
8	N37183	Bracket	2
9	N37829	Sampe Tray Strap	1
10	N37907	Flange Lock Nut - 1/2 W/Center Lock	1
11	**N50869**	Slider Clip	1
12	N37911	Cavity Rate Calibration Insert	1
12A	N50740	**ICT** Cavity Rate Calibration Insert	
13	N37912	Rate Calibration Assembly - Includes Items 3, 10, 11, 12	1
	N50742	**ICT** Rate Callibration Insert Assembly - 9 Wide - Includes Items 3, 10, 11, 12A	
14	N42220	Digital Hanging Scale	1
15	N44597	Sample Tray Mount Plate	1
16	P7C616	Carriage Bolt - 3/8 x 1 Lg	2
17	W14399	U-Bolt - 3/8 x 4 7/8 UL	2
18	W-513	Hex Nut - 5/16	2
19	W-514	Hex Nut - 3/8	6
20	W-522	Lockwasher - 5/16	2
21	W-523	Lockwasher - 3/8	6

Sample Collection Tray
9445, 9550 and 9650 - 2016 to Present

Tow Behind

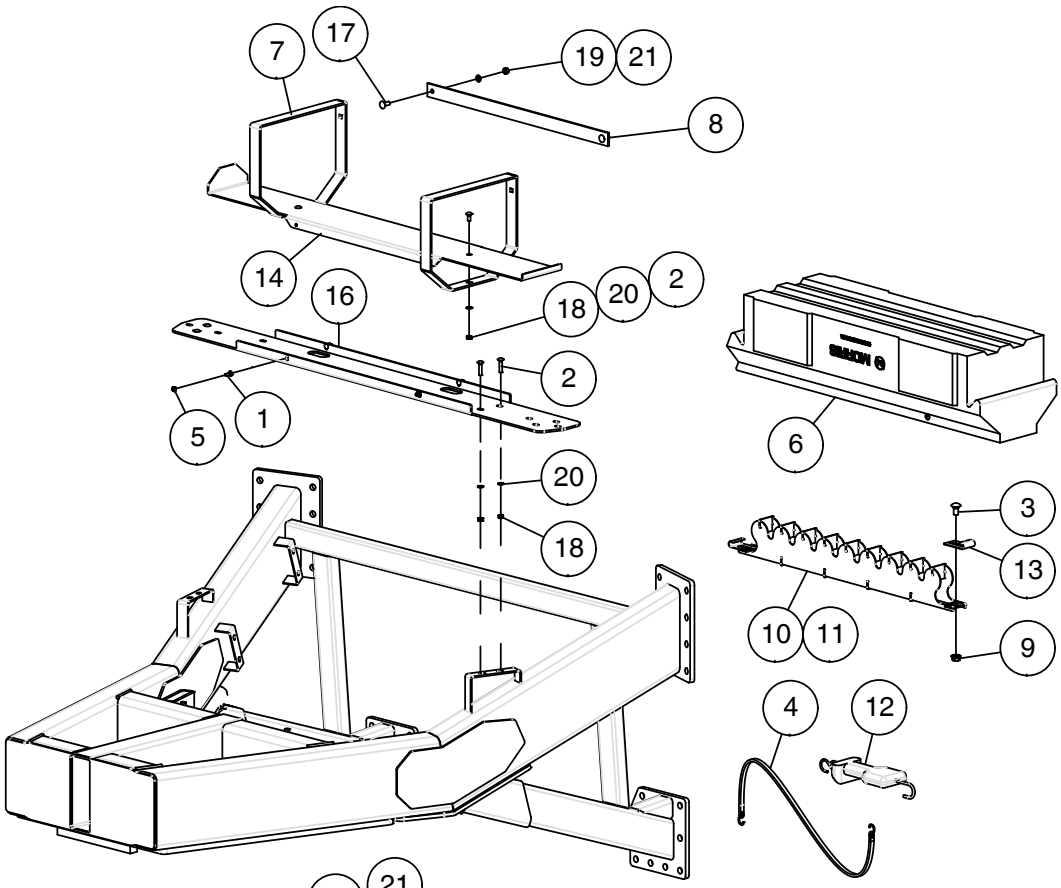

Tow Between

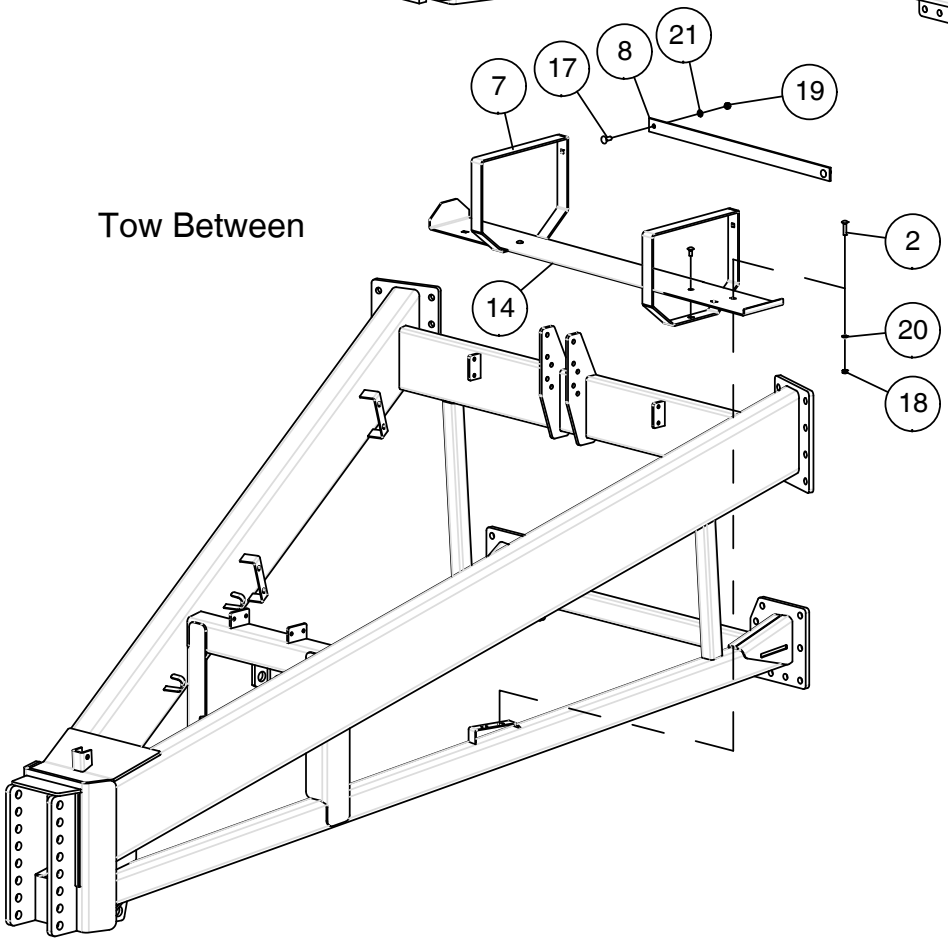

Sample Collection Tray - 9445, 9550 and 9650 - 2016 to Present

Item	Part No.	Description	Qty
1	D-5258	Carriage Bolt 1/4 x 3/4 Lg	4
2	D-5259	Carriage Bolt - 5/16 x 3/4 Lg	6
3	D-5265	Carriage Bolt - 1/2 x 1 Lg	1
4	N19563	Tie Down Strap	1
5	N22778	Locknut - 1/4 Nylon Insert	4
6	N36120	Sample Collection Tray - 9 Wide	1
7	N37183	Sample Collection Tray Bracket	2
8	N37829	Sampe Tray Strap	1
9	N37907	Lock Nut - 1/2 Flange W/Center Lock	1
10	N37911	Cavity Rate Calibration Insert - 9 Wide	1
10A	N50740	**ICT** Cavity Rate Calibration Insert - 9 Wide	
11	N37912	Rate Callibration Insert Assembly - 9 Wide - Includes Items 3, 9, 10, 13	1
	N50742	**ICT** Rate Callibration Insert Assembly - 9 Wide - Includes Items 3, 9, 10A, 13	
12	N42220	Digital Hanging Scale	1
13	N50869	Slider Clip	1
14	N37182	Retainer Plate - 9 Wide - **Tow Behind**	1
14A	N58304	Retainer Plate - 9 Wide - **Tow Between**	1
15	N51790	Sample Collection Tray - 10 Wide	1
16	N51791	Mount Plate - Sample Tray	1
17	P7C616	Carriage Bolt - 3/8 x 1 Lg	2
18	W-513	Hex Nut - 5/16	6
19	W-514	Hex Nut - 3/8	2
20	W-522	Lockwasher - 5/16	6
21	W-523	Lockwasher - 3/8	2

Sample Collection Tray
9800 and 91000

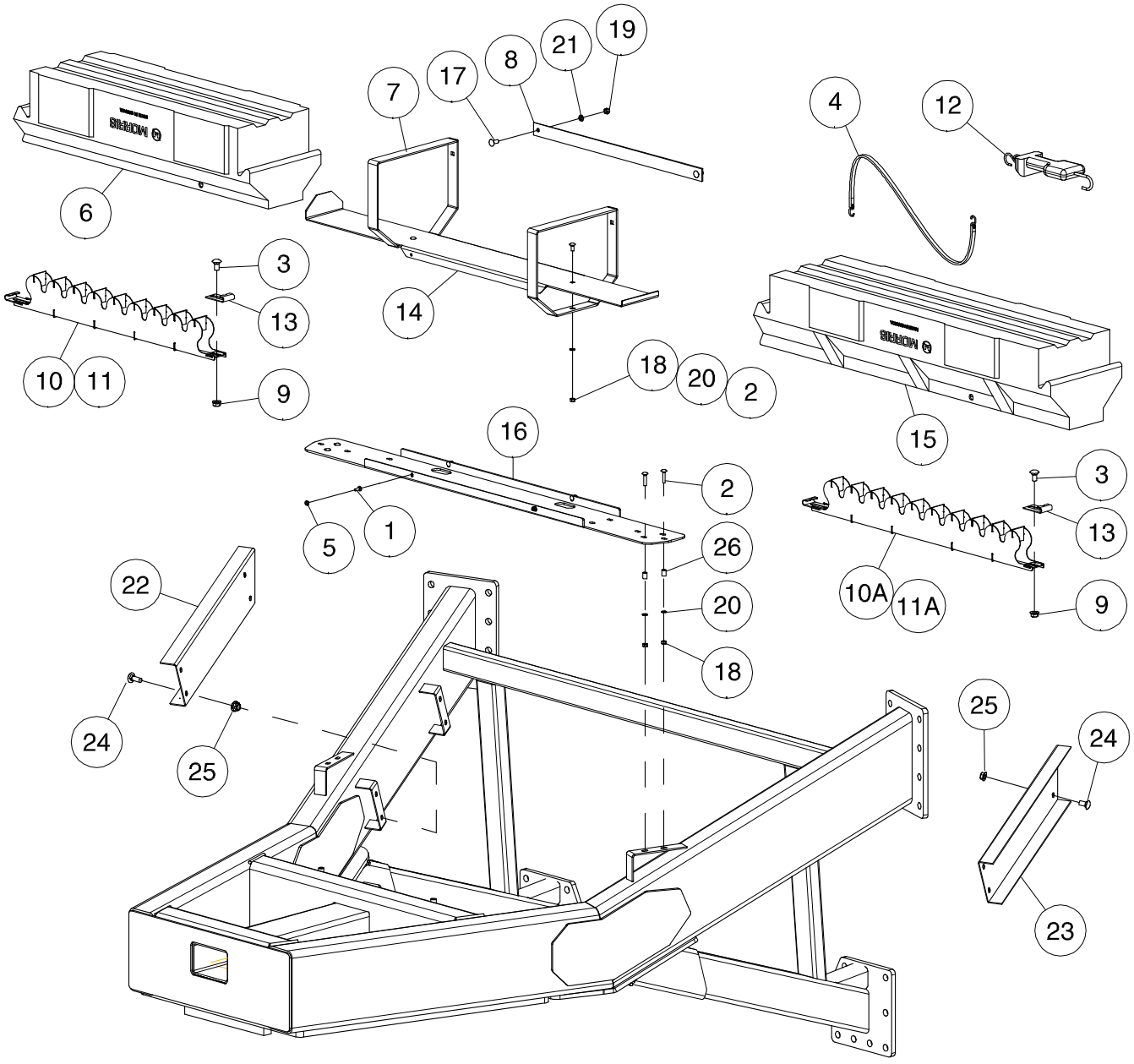

Sample Collection Tray - 9800 and 91000

Item	Part No.	Description	Qty
1	D-5258	Carriage Bolt 1/4 x 3/4 Lg	4
2	D-5259	Carriage Bolt - 5/16 x 3/4 Lg	6
2	S51466	Carriage Bolt - 5/16 x 2 Lg - ICT	6
3	D-5265	Carriage Bolt - 1/2 x 1 Lg	1
4	N19563	Tie Down Strap	1
5	N22778	Locknut - 1/4 Nylon Insert	4
6	N36120	Sample Collection Tray - 9 Wide	1
7	N37183	Sample Collection Tray Bracket	2
8	N37829	Sampe Tray Strap	1
9	N37907	Lock Nut - 1/2 Flange W/Center Lock	1
10	N37911	Cavity Rate Calibration Insert - 9 Wide	1
10A	**N51753**	**Cavity Rate Calibration Insert - 10 Wide**	
10B	N53687	**ICT** Cavity Rate Calibration Insert - 10 Wide	
11	N37912	Rate Callibration Insert Assembly - 9 Wide - Includes Items 3, 9, 10, 13	1
11A	**N51830**	**Rate Callibration Insert Assembly - 10 Wide - Includes Items 3, 9, 10A, 13**	
11B	N53675	**ICT** Rate Callibration Insert Assembly - 10 Wide - Includes Items 3, 9, 10B, 13	
12	N42220	Digital Hanging Scale	1
13	N50869	Slider Clip	1
14	N51789	Retainer Plate - 10 Wide	1
	N37182	Retainer Plate - 9 Wide	
15	N51790	Sample Collection Tray - 10 Wide	1
16	N51791	Mount Plate - Sample Tray	1
17	P7C616	Carriage Bolt - 3/8 x 1 Lg	2
18	W-513	Hex Nut - 5/16	6
19	W-514	Hex Nut - 3/8	2
20	W-522	Lockwasher - 5/16	6
21	W-523	Lockwasher - 3/8	2
22	N51660	Hose Cover - Right	1
23	N51661	Hose Cover - Left	1
24	D-5260	Carriage Bolt - 3/8 x 1 1/4 Lg	8
25	D-5279	Lock Nut - 3/8 Serrated Flange	8
26	N15559	Bushing - 3/8 ID x 5/8 OD x 1 Lg - ICT	4

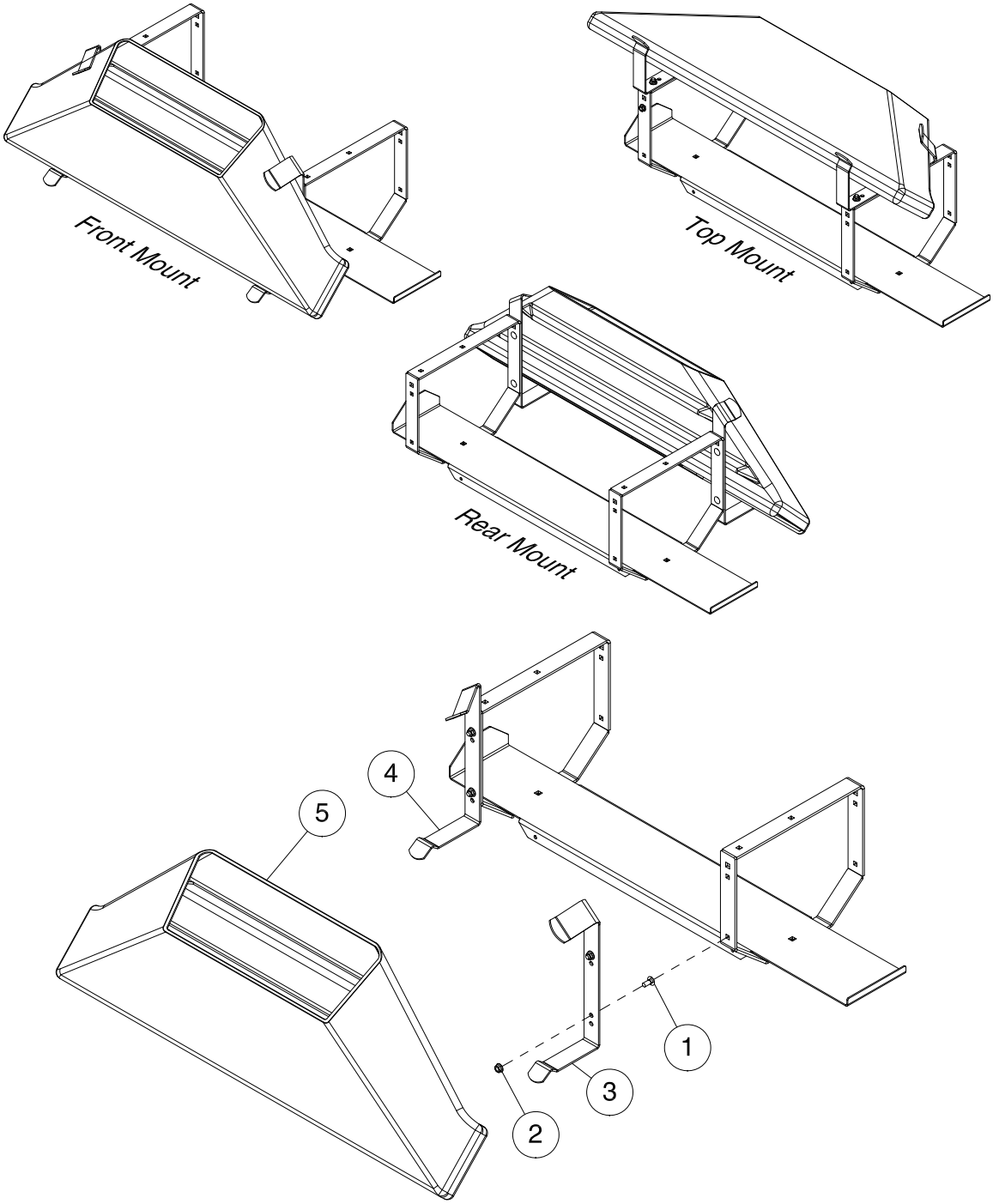

Item	Part No.	Description	Qty
1	D-5259	Carriage Bolt - 5/16 x 3/4 Lg	4
2	D-5278	Flange Lock Nut - 5/16	4
3	N53917	Storage Strap - Left	1
4	N53918	Storage Strap - Right	1
5	N53920	Cleanout Chute	1

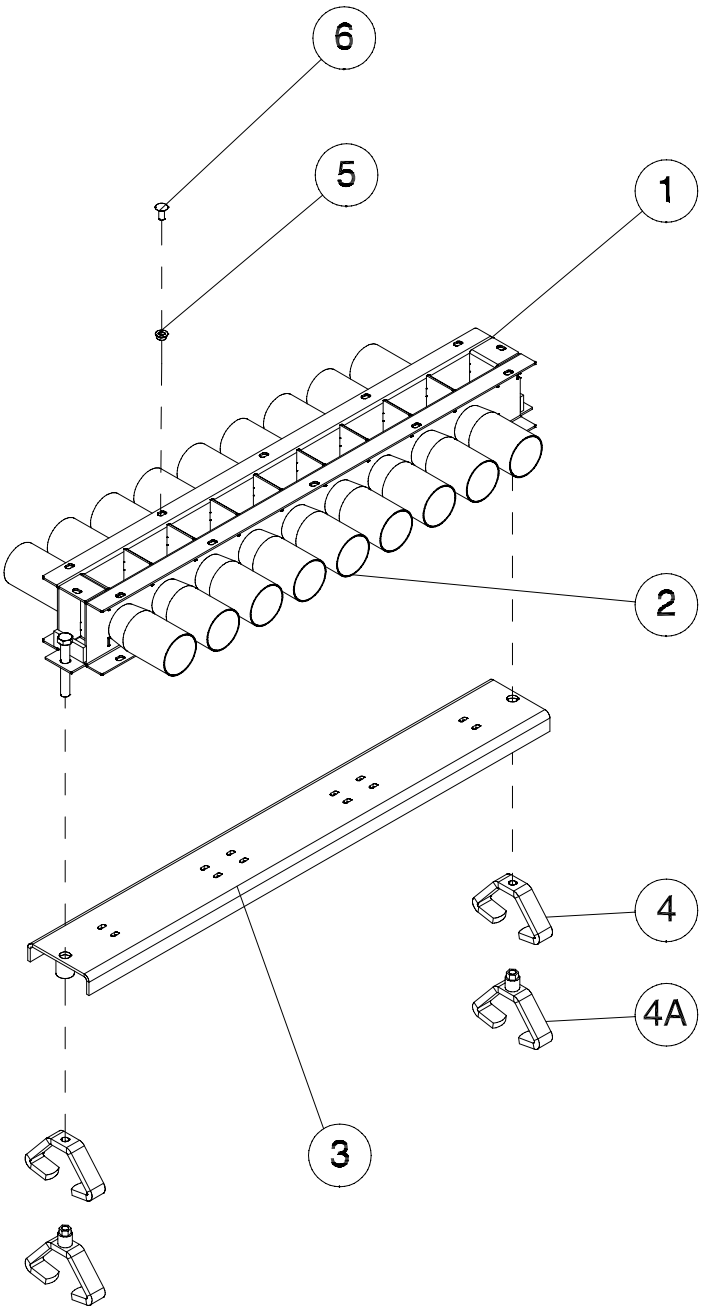

Item	Part No.	Description	Qty
1	N55191	Spacer Collector Broadcast - Includes Items 2, 3, & 4	1
2	N37844	Collector (Pass Through) - Includes Seal N37190	1
3	N37932	Clean Out Door - Includes Seal N21198	1
4	N27360	Wing Lock Nut - 1/2	2
4A	N40865	Wing Lock Nut - 1/2 (Tow Between - front and middle tank)	2
5	D-5278	Locknut - 5/16 Serrated	12
6	D-5259	Carriage Bolt - 5/16 x 3/4 Lg	12

Notes

Section 10: Distribution

Section Contents

Distribution - Tow Behind 10-2
Single Shoot - Two Tank 9365 - 9445 - 9555 10-2
Single Shoot - Three Tank 9450 - 9550 - 9680 10-4
Single Shoot - Four Tank 9535 - 9650 - 9800 - 91000 10-6
Double Shoot - Two Tank 9365 - 9445 - 9555 10-8
Double Shoot - Three Tank 9450 - 9550 - 9680 10-10
Double Shoot - Four Tank 9535 - 9650 - 9800 - 91000 10-12
Distribution - Tow Between 10-14
Single Shoot - Two Tank 9365 - 9445 - 9555 10-14
Single Shoot - Three Tank 9450 - 9550 - 9680 10-16
Single Shoot - Four Tank 9650 - 9800 10-18
Double Shoot - Two Tank 9365 - 9445 - 9555 10-20
Double Shoot - Three Tank 9450 - 9550 - 9680 10-22
Double Shoot - Four Tank Configuration 10-24
Quick Coupler 10-26
3 Outlet 10-26
5 Outlet 10-27
Divider Head - 1 Outlets 10-28
Single Shoot - 1 Outlets 10-30
Double Shoot - 1 Outlets 10-32
Divider Head - 1 1/8 Outlets 10-34
Single Shoot - 1 1/8 Outlet 10-36
Double Shoot - 1 1/8 Outlet 10-38
Deflectors Assembly 10-40
Concept 2000 Deflectors Assembly 10-41
C2 Contour Broadcast 10-42
Plenum - Dual Fan 10-44
Single Shoot Plenum - 9 Outlet 10-44
Single Shoot Plenum - 10 Outlet 10-45
Plenum - Single Fan 10-46
Double Shoot Plenum - 18 Outlet 10-46
Double Shoot Plenum - 20 Outlet 10-47
Pipe Cross Reference Chart 10-48
Stainless Head Conversion Kits 10-49
Stainless Head Conversion 10-50
Divider Head Mounting Stands 10-50
Divider Head Assembly 10-52

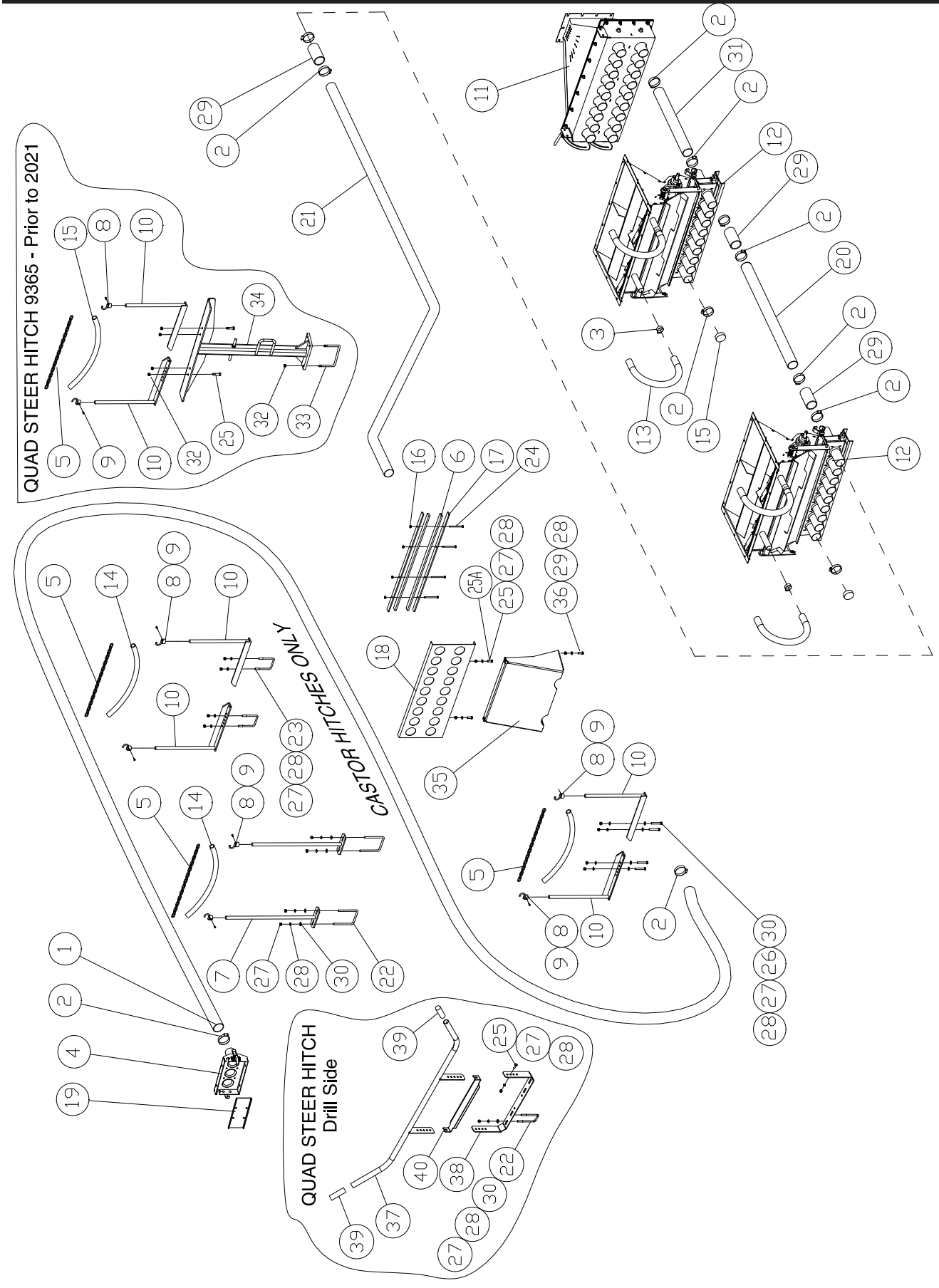
QUAD STEER HITCH 9365 - Prior to 2021
CASTOR HITCHES ONLY
QUAD STEER HITCH
Drill Side

Distribution Tow Behind - Single Shoot Two Tank 9365 - 9445 - 9555

Item	Part No.	Description	No. Used — Number of Primaries						
			3	4	5	6	7	8	9
1	R480055	Hose - 2 1/2 ID Goodyear x 17 ft	3	4	5	6	7	8	9
2	N11905	Hose Clamp - HS-44	69	74	79	84	89	94	99
3	N11906	Hose Clamp - 1 1/2 Dia	8	8	8	8	8	8	8
4	* * * * *	Hose Coupler (See Page 10-26 and 10-27)	1	1	2	2	2	2	3
5	N19448	Chain - 3/16 x 80 Links	3	3	3	3	3	3	3
6	N19449	Seal Strip - 3/8 x 1 x 2.583 ft	2	2	2	2	2	2	2
7	N19531	Support - 24 Lg	2	2	2	2	2	2	2
8	N19717	Chain Hook	6	6	6	6	6	6	6
9	N24396	Set Screw - 1/4 x 1/2 Lg Sq Head	6	6	6	6	6	6	6
10	N33834	Bracket	4	4	4	4	4	4	4
11	N37459	Plenum Assembly - 18 Outlet	1	1	1	1	1	1	1
12	* * * * *	Single Shoot Collector (See Section 9)	2	2	2	2	2	2	2
13	R480101	Hose - 1 1/2 OD x 36 Lg	4	4	4	4	4	4	4
14	R480034	Hose - 0.929 ID x 1.169 OD x 18 Lg	3	3	3	3	3	3	3
15	N11907	Plastic Cap	39	34	29	24	19	14	9
16	D-5277	Flange Lock Nut - 1/4	4	4	4	4	4	4	4
17	N36146	Pipe Retainer - 32 Lg - 9 Primary	2	2	2	2	2	2	2
	N66423	Pipe Retainer - 37 Lg - ICT 9 Primary(9365 - 9445)	2	2	2	2	2	2	2
	N51640	**Pipe Retainer - 33 Lg - 10 Primary (9555)**	**2**	**2**	**2**	**2**	**2**	**2**	**2**
	N60295	Pipe Retainer - 41 Lg - ICT 10 Primary (9555)	2	2	2	2	2	2	2
18	N36440	Mount Plate - 9 Primary Double	1	1	1	1	1	1	1
	N65840	Mount Plate - ICT 9 Primary(9365 - 9445)	1	1	1	1	1	1	1
	N51760	**Mount Plate - 10 Primary Double (9555)**	**1**	**1**	**1**	**1**	**1**	**1**	**1**
	N60290	Mount Plate - ICT 10 Primary (9555)	1	1	1	1	1	1	1
19	* * * * *	Blank Off (See Section 9)	1	1	2	2	2	2	3
20	N62400	Pipe SS - 51 Lg (9365)	3	4	5	6	7	8	9
	N62401	Pipe SS - 63 1/4 (9445)	3	4	5	6	7	8	9
	N62402	Pipe SS - 63 Lg (9555)	3	4	5	6	7	8	9
21	N62403	Pipe SS - 158 Lg x 41 9/16 High (9365)	3	4	5	6	7	8	9
	N62404	Pipe SS - 173 1/8 Lg x 26 3/4 H (9445 prior to 2016)	3	4	5	6	7	8	9
	N62405	**Pipe SS - 180 7/8 Lg x 26 3/4 High (9445 - 2016)**	**3**	**4**	**5**	**6**	**7**	**8**	**9**
	N62406	Pipe SS - 172 5/8 Lg x 26 3/4 High (9555)	3	4	5	6	7	8	9
22	N15097	U-Bolt - 3/8 x 2 3/8 x 5	2	2	2	2	2	2	2
	S42354	U-Bolt - 3/8 x 3 x 5	2	2	2	2	2	2	2
	N15098	U-Bolt - 3/8 x 4 x 5	2	2	2	2	2	2	2
23	N36148	U-Bolt - 3/8 x 3 x 4 UL	2	4	6	8	10	12	14
24	N12882	Hex Bolt - 1/4 x 3 1/2	4	4	4	4	4	4	4
25	W-475	Hex Bolt - 3/8 x 1 Lg	2	2	2	2	2	2	2
	W-479	Hex Bolt - 3/8 x 2 1/4 Lg - Quad Steer	6	6	6	6	6	6	6
25A	W-480	Hex Bolt - 3/8 x 2 1/2 Lg - (9445)	4	4	4	4	4	4	4
26	W-480	Hex Bolt - 3/8 x 2 1/2 Lg	4	4	4	4	4	4	4
27	W-514	Hex Nut - 3/8	14	14	14	14	14	14	14
28	W-523	Lockwasher - 3/8	14	14	14	14	14	14	14
29	N19428	Hose - 2.52 ID x 2.77 OD x 5 Lg	9	12	15	18	21	24	27
30	D-5489	Flatwasher - 13/32 ID x 13/16 OD x 16 Ga	8	8	8	8	8	8	8
31	R480055	Hose - 2 1/2 ID x 36 Lg	3	4	5	6	7	8	9
32	S27987	Hex Nut - 3/8 Flanged center lock	8	8	8	8	8	8	8
33	H10592	U-Bolt - 3/8 x 6 x 5 UL	2	2	2	2	2	2	2
34	N44682	Stand - Hose	1	1	1	1	1	1	
35	N53880	Hose Holder - Extension (9365 Quad Steer)	1	1	1	1	1	1	1
36	W-187	Hex Bolt - 3/8 x 1 1/4 Lg - (9365 Quad Steer)	2	2	2	2	2	2	2
37	N56370	Bracket - Hose Holder (Quad Hitch on Drill)	1	1	1	1	1	1	1
38	N56371	Strap - Hose Holder (Quad Hitch on Drill)	1	1	1	1	1	1	1
39	N37049	Rubber Grip (Quad Hitch on Drill)	2	2	2	2	2	2	2
40	N69148	Support - Hydraulic Hoses	1	1	1	1	1	1	1

Note:
For Customers wanting regular painted steel pipes see Cross Reference Chart at end of section on page 10-48

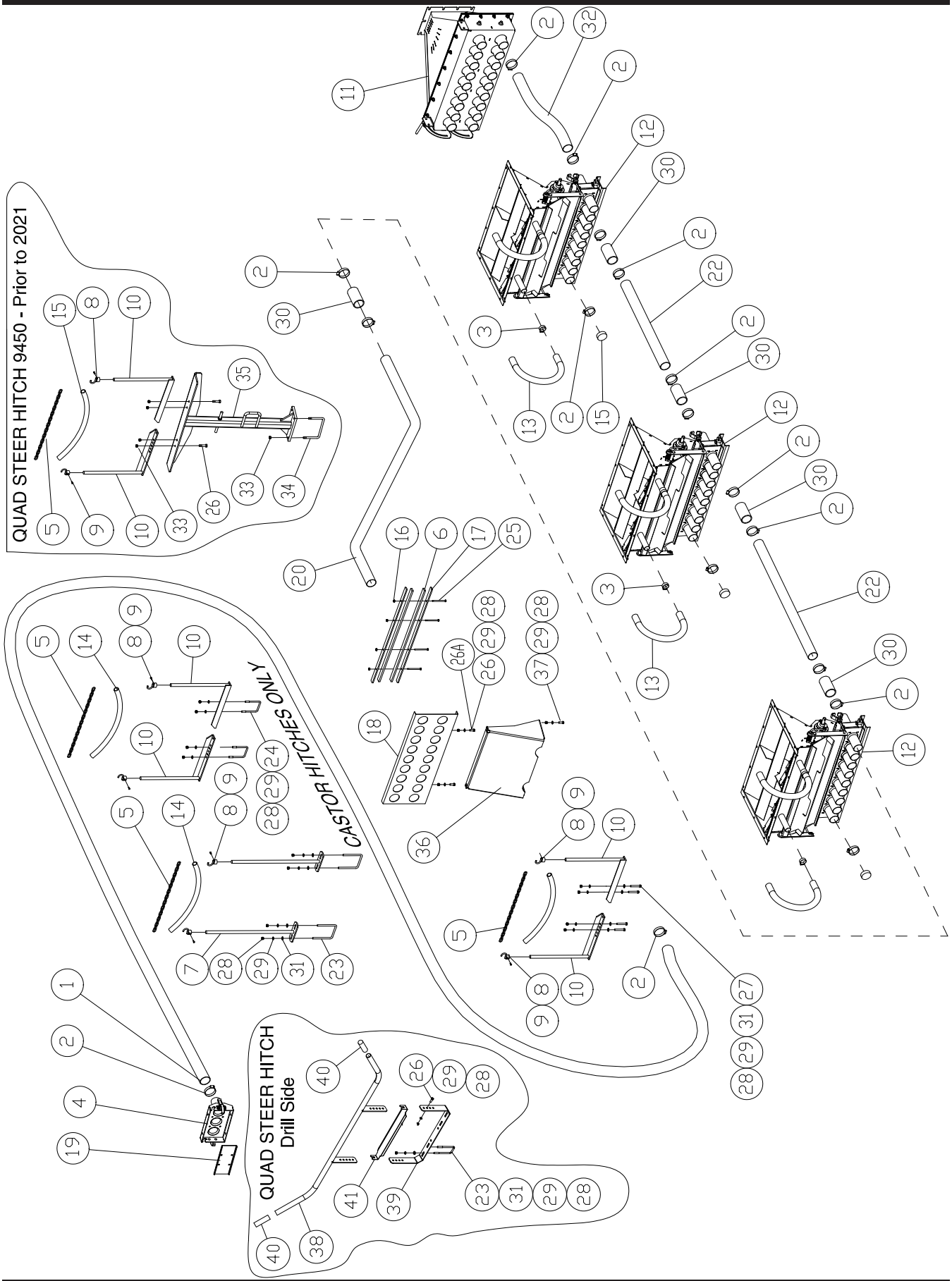
QUAD STEER HITCH 9450 - Prior to 2021
CASTOR HITCHES ONLY
QUAD STEER HITCH
Drill Side

Distribution Tow Behind - Single Shoot Three Tank 9450 - 9550 - 9680

Item	Part No.	Description	No. Used						
			Number of Primaries						
			3	4	5	6	7	8	9
1	R480055	Hose - 2 1/2 ID Goodyear x 17 ft	3	4	5	6	7	8	9
2	N11905	Hose Clamp - HS-44	96	103	110	117	124	131	138
3	N11906	Hose Clamp - 1 1/2 Dia	12	12	12	12	12	12	12
4	* * * * *	Hose Coupler (See Page 10-26 and 10-27)	1	1	2	2	2	2	3
5	N19448	Chain - 3/16 x 80 Links	3	3	3	3	3	3	3
6	N19449	Seal Strip - 3/8 x 1 x 2.583 ft	2	2	2	2	2	2	2
7	N19531	Support - 24 Lg	2	2	2	2	2	2	2
8	N19717	Chain Hook	6	6	6	6	6	6	6
9	N24396	Set Screw - 1/4 x 1/2 Lg Sq Head	6	6	6	6	6	6	6
10	N33834	Bracket	4	4	4	4	4	4	4
11	N37459	Plenum Assembly - 18 Outlet	1	1	1	1	1	1	1
12	* * * * *	Single Shoot Collector (See Section 9)	3	3	3	3	3	3	3
13	R480101	Hose - 1 1/2 OD x 36 Lg	6	6	6	6	6	6	6
14	R480034	Hose - 0.929 ID x 1.169 OD x 18 Lg	3	3	3	3	3	3	3
15	N11907	Plastic Cap	54	47	40	33	26	19	12
16	D-5277	Flange Lock Nut -1/4	4	4	4	4	4	4	4
17	N36146	Pipe Retainer - 32 Lg - 9 Primary	2	2	2	2	2	2	2
	N66423	Pipe Retainer - 37 Lg - ICT 9 Primary(9450 - 9550)	2	2	2	2	2	2	2
	N51640	**Pipe Retainer - 33 Lg - 10 Primary (9680)**	**2**	**2**	**2**	**2**	**2**	**2**	**2**
	N60295	Pipe Retainer - 41 Lg - ICT 10 Primary (9680)	2	2	2	2	2	2	2
18	N36440	Mount Plate - 9 Primary Double	1	1	1	1	1	1	1
	N65840	Mount Plate - ICT 9 Primary(9450 - 9550)	1	1	1	1	1	1	1
	N51760	**Mount Plate - 10 Primary Double (9680)**	**1**	**1**	**1**	**1**	**1**	**1**	**1**
	N60290	Mount Plate - ICT 10 Primary (9680)	1	1	1	1	1	1	1
19	* * * * *	Blank Off (See Section 9)	1	1	2	2	2	2	3
20	N62407	Pipe SS - 124 Lg x 41.6 High (9450)	3	4	5	6	7	8	9
	N62408	Pipe SS - 132 Lg x 26.75 High (9550 prior to 2016)	3	4	5	6	7	8	9
	N62409	**Pipe SS - 145 Lg x 26.75 High (9550 - 2016)**	**3**	**4**	**5**	**6**	**7**	**8**	**9**
	N62410	Pipe SS - 132 5/8 Lg x 26 3/4 High (9680)	3	4	5	6	7	8	9
21	* * * * *		*	*	*	*	*	*	
22	N62411	Pipe SS - 34 Lg (9450)	6	8	10	12	14	16	18
	N62412	Pipe SS - 63.25 Lg (9550)	6	8	10	12	14	16	18
	N62413	Pipe -SS 45 1/2 Lg (9680)	6	8	10	12	14	16	18
23	N15097	U-Bolt - 3/8 x 2 3/8 x 5	2	2	2	2	2	2	2
	S42354	U-Bolt - 3/8 x 3 x 5	2	2	2	2	2	2	2
	N15098	U-Bolt - 3/8 x 4 x 5	2	2	2	2	2	2	2
24	N36148	U-Bolt - 3/8 x 3 x 4	2	2	2	2	2	2	2
25	N12882	Hex Bolt - 1/4 x 3 1/2	4	4	4	4	4	4	4
26	W-475	Hex Bolt - 3/8 x 1 Lg	2	2	2	2	2	2	2
	W-475	Hex Bolt - 3/8 x 1 Lg - Quad Steer	6	6	6	6	6	6	6
26A	W-480	Hex Bolt - 3/8 x 2 1/2 Lg - (9550)	4	4	4	4	4	4	4
27	W-480	Hex Bolt - 3/8 x 2 1/2 Lg	4	4	4	4	4	4	4
28	W-514	Hex Nut - 3/8	14	14	14	14	14	14	14
29	W-523	Lockwasher - 3/8	14	14	14	14	14	14	14
30	N19428	Hose - 2.52 ID x 2.77 OD x 5 Lg	15	20	25	30	35	40	45
31	D-5489	Flatwasher - 13/32 ID x 13/16 OD x 16 Ga	8	8	8	8	8	8	8
32	R480055	Hose - 2 1/2 ID x 36 Lg	3	4	5	6	7	8	9
33	S27987	Hex Nut - 3/8 Flanged center lock	8	8	8	8	8	8	8
34	H10592	U-Bolt - 3/8 x 6 x 5 UL	2	2	2	2	2	2	2
35	N44682	Stand - Hose	1	1	1	1	1	1	1
36	N53880	Hose Holder - Extension (9450 Quad Steer)	1	1	1	1	1	1	1
37	W-187	Hex Bolt - 3/8 x 1 1/4 Lg - (9450 Quad Steer)	2	2	2	2	2	2	2
38	N56370	Bracket - Hose Holder (Quad Hitch on Drill)	1	1	1	1	1	1	1
39	N56371	Strap - Hose Holder (Quad Hitch on Drill)	1	1	1	1	1	1	1
40	N37049	Rubber Grip (Quad Hitch on Drill)	2	2	2	2	2	2	2
41	N69148	Support - Hydraulic Hoses	1	1	1	1	1	1	1

Note:
For Customers wanting regular painted steel pipes see Cross Reference Chart at end of section on page 10-48

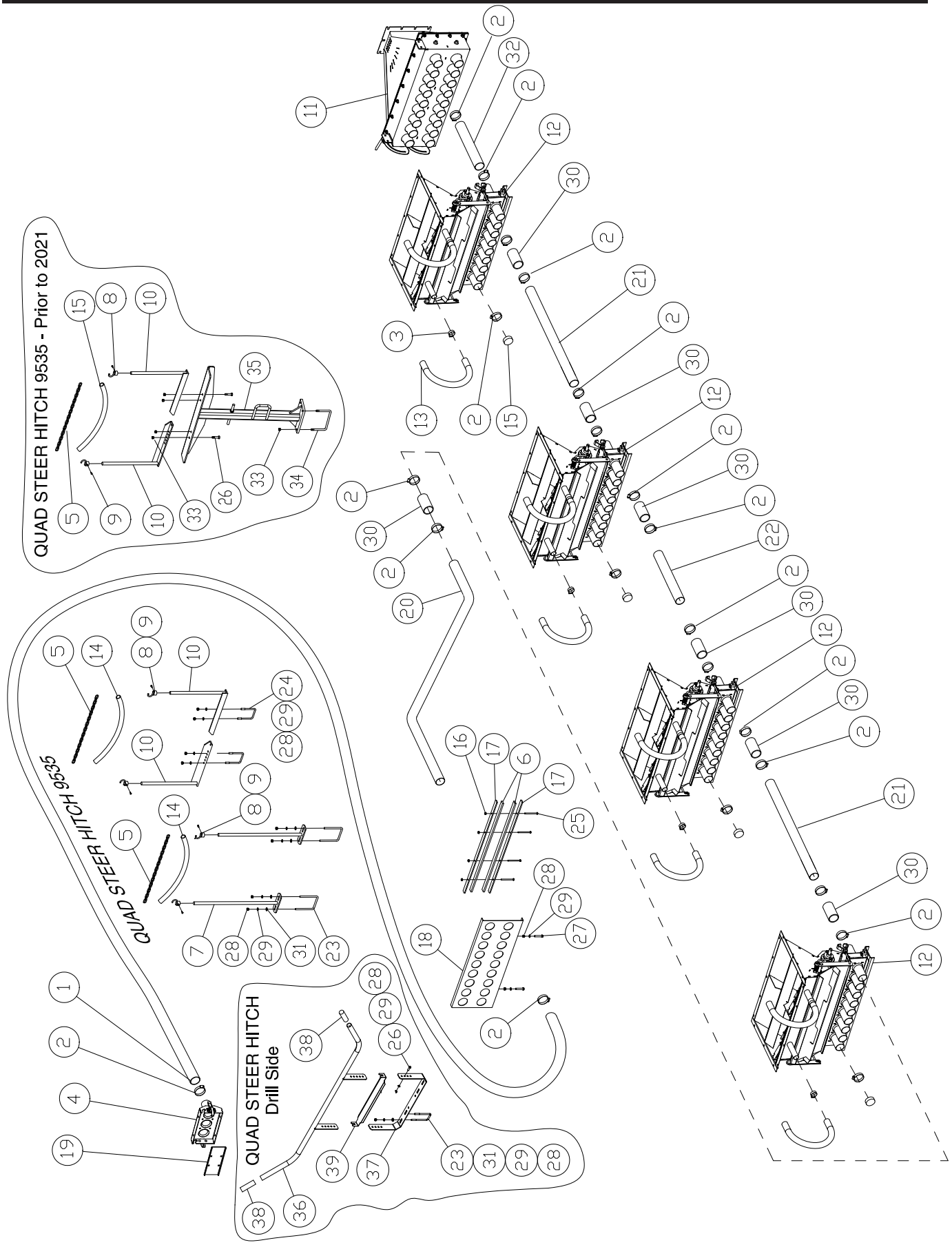
QUAD STEER HITCH 9535 - Prior to 2021
QUAD STEER HITCH 9535
QUAD STEER HITCH
Drill Side

Distribution Tow Behind - Single Shoot Four Tank 9535 - 9650 - 9800 - 91000

Item	Part No.	Description	No. Used Number of Primaries 3	4	5	6	7	8	9
1	R480055	Hose - 2 1/2 ID Goodyear x 17 ft	3	4	5	6	7	8	9
2	N11905	Hose Clamp - HS-44	96	103	110	117	124	131	138
3	N11906	Hose Clamp - 1 1/2 Dia	12	12	12	12	12	12	12
4	* * * * *	Hose Coupler (See Page 10-26 and 10-27)	1	1	2	2	2	2	3
5	N19448	Chain - 3/16 x 80 Links	3	3	3	3	3	3	3
6	N19449	Seal Strip - 3/8 x 1 x 5.166 ft - 9 Primary	1	1	1	1	1	1	1
	N19449	Seal Strip - 3/8 x 1 x 5.75 ft - 10 Primary (9800 - 91000)	1	1	1	1	1	1	1
7	N19531	Support - 24 Lg	2	2	2	2	2	2	2
8	N19717	Chain Hook	6	6	6	6	6	6	6
9	N24396	Set Screw - 1/4 x 1/2 Lg Sq Head	6	6	6	6	6	6	6
10	N33834	Bracket	4	4	4	4	4	4	4
11	N37459	Plenum Assembly - 18 Outlet	1	1	1	1	1	1	1
12	* * * * *	Single Shoot Collector (See Section 9)	3	3	3	3	3	3	3
13	R480101	Hose - 1 1/2 OD x 36 Lg	6	6	6	6	6	6	6
14	R480034	Hose - 0.929 ID x 1.169 OD x 18 Lg	3	3	3	3	3	3	3
15	N11907	Plastic Cap	54	47	40	33	26	19	12
16	D-5277	Flange Lock Nut -1/4	4	4	4	4	4	4	4
17	N36146	Pipe Retainer - 32 Lg - 9 Primary	2	2	2	2	2	2	2
	N66423	Pipe Retainer - 37 Lg - ICT 9 Primary(9535 - 9650)	2	2	2	2	2	2	2
	N51640	**Pipe Retainer - 33 Lg - 10 Primary (9800 - 91000)**	**2**	**2**	**2**	**2**	**2**	**2**	**2**
	N60295	Pipe Retainer - 41 Lg - ICT 10 Primary(9800 - 91000)	2	2	2	2	2	2	2
18	N36440	Mount Plate - 9 Primary Double	1	1	1	1	1	1	1
	N65840	Mount Plate - ICT 9 Primary(9535 - 9650)	1	1	1	1	1	1	1
	N51760	**Mount Plate - 10 Primary Double (9800 - 91000)**	**1**	**1**	**1**	**1**	**1**	**1**	**1**
	N60290	Mount Plate - ICT 10 Primary (9800 - 91000)	1	1	1	1	1	1	1
19	* * * * *	Blank Off (See Section 9)	1	1	2	2	2	2	3
20	N62414	Pipe SS - 95 Lg x 26.75 High (9650 prior to 2016)	3	4	5	6	7	8	9
	N62415	**Pipe SS - 109 Lg x 26.75 High (9650 - 2016)**	**3**	**4**	**5**	**6**	**7**	**8**	**9**
	N62416	Pipe SS - 84 Lg x 27.625 High (9535)	3	4	5	6	7	8	9
	N62417	Pipe SS - 92 3/4 Lg x 26 3/4 High (9800 - 91000)	3	4	5	6	7	8	9
21	N62412	Pipe SS - 42.75 Lg (9650)	6	8	10	12	14	16	18
	N62411	Pipe SS - 34 Lg (9535)	6	8	10	12	14	16	18
	N62413	Pipe SS - 45 1/2 (9800 - 91000)	6	8	10	12	14	16	18
22	N62418	Pipe SS - 23 Lg (9650)	3	4	5	6	7	8	9
	N62419	Pipe SS - 17 Lg (9535)	3	4	5	6	7	8	9
	N62420	Pipe SS - 27 1/2 Lg (9800 - 91000)	3	4	5	6	7	8	9
23	N15097	U-Bolt - 3/8 x 2 3/8 x 5	2	2	2	2	2	2	2
	S42354	U-Bolt - 3/8 x 3 x 5	2	2	2	2	2	2	2
	N15098	U-Bolt - 3/8 x 4 x 5	2	2	2	2	2	2	2
24	N36148	U-Bolt - 3/8 x 3 x 4 UL	2	2	2	2	2	2	2
25	N12882	Hex Bolt - 1/4 x 3 1/2	4	4	4	4	4	4	4
26	W-475	Hex Bolt - 3/8 x 1 Lg	4	4	4	4	4	4	4
27	W-480	Hex Bolt - 3/8 x 2 1/2 Lg	4	4	4	4	4	4	4
28	W-514	Hex Nut - 3/8	14	14	14	14	14	14	14
29	W-523	Lockwasher - 3/8	14	14	14	14	14	14	14
30	N19428	Hose - 2.52 ID x 2.77 OD x 5 Lg	15	20	25	30	35	40	45
31	D-5489	Flatwasher - 13/32 ID x 13/16 OD x 16 Ga	8	8	8	8	8	8	8
32	R480055	Hose - 2 1/2 ID x 36 Lg	3	4	5	6	7	8	9
33	S27987	Hex Nut - 3/8 Flanged center lock	8	8	8	8	8	8	8
34	H10592	U-Bolt - 3/8 x 6 x 5 UL	2	2	2	2	2	2	2
35	N44682	Stand - Hose	1	1	1	1	1	1	1
36	N56370	Bracket - Hose Holder (Quad Hitch on Drill)	1	1	1	1	1	1	1
37	N56371	Strap - Hose Holder (Quad Hitch on Drill)	1	1	1	1	1	1	1
38	N37049	Rubber Grip (Quad Hitch on Drill)	2	2	2	2	2	2	2
39	N69148	Support - Hydraulic Hoses	1	1	1	1	1	1	1

Note:
For Customers wanting regular painted steel pipes see Cross Reference Chart at end of section on page 10-48

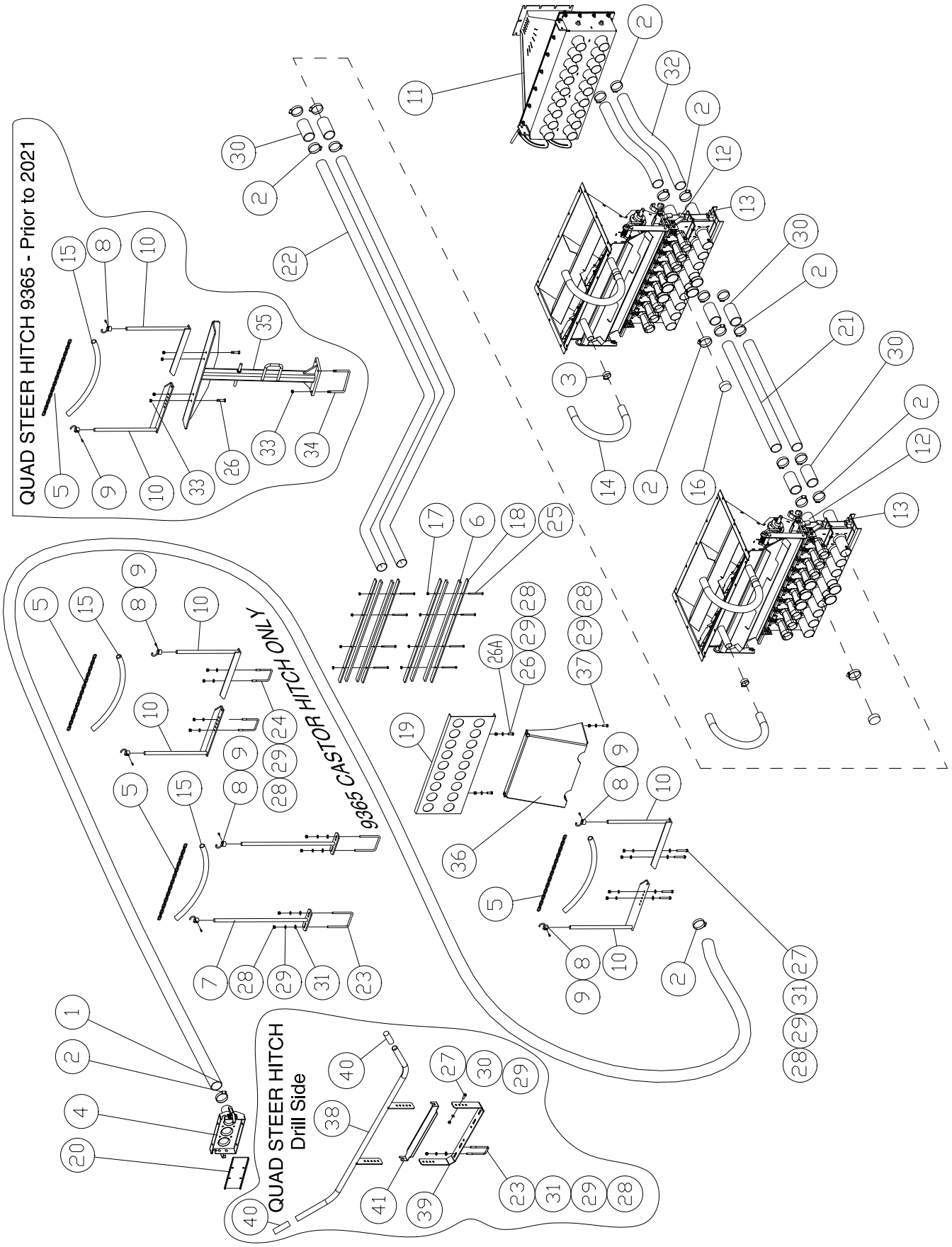
QUAD STEER HITCH 9365 - Prior to 2021
9365 CASTOR HITCH ONLY
QUAD STEER HITCH
Drill Side

Distribution Tow Behind - Double Shoot Two Tank 9365 - 9445 - 9555

Item	Part No.	Description	No. Used — Number of Primaries 3	4	5	6	7	8	9
1	R480055	Hose - 2 1/2 ID Goodyear x 17 ft	6	8	10	12	14	16	18
2	N11905	Hose Clamp - HS-44	121	131	141	151	161	171	181
3	N11906	Hose Clamp - 1 1/2 Dia	8	8	8	8	8	8	8
4	* * * * *	Hose Coupler (See Page 10-26 and 10-27)	2	2	3	3	4	4	5
5	N19448	Chain - 3/16 x 80 Links	3	3	3	3	3	3	3
6	N19449	Seal Strip - 3/8 x 1 x 2.583 ft	4	4	4	4	4	4	4
7	N19531	Support - 24 Lg	2	2	2	2	2	2	2
8	N19717	Chain Hook	6	6	6	6	6	6	6
9	N24396	Set Screw - 1/4 x 1/2 Lg Sq Head	6	6	6	6	6	6	6
10	N33834	Bracket	4	4	4	4	4	4	4
11	N37459	Plenum Assembly - 18 Outlet	1	1	1	1	1	1	1
12	* * * * *	Double Shoot Collector (See Section 9)	2	2	2	2	2	2	2
13	* * * * *	Single Shoot Collector (See Section 9)	2	2	2	2	2	2	2
14	R480101	Hose - 1 1/2 OD x 36 Lg	4	4	4	4	4	4	4
15	R480034	Hose - 0.929 ID x 1.169 OD x 18 Lg	3	3	3	3	3	3	3
16	N11907	Plastic Cap	61	51	41	31	21	11	1
17	D-5277	Flange Lock Nut - 1/4	8	8	8	8	8	8	8
18	N36146	Pipe Retainer - 32 Lg - 9 Primary	4	4	4	4	4	4	4
	N66423	Pipe Retainer - 37 Lg - ICT 9 Primary(9365 - 9445)	4	4	4	4	4	4	4
	N51640	**Pipe Retainer - 33 Lg - 10 Primary (9555)**	**4**	**4**	**4**	**4**	**4**	**4**	**4**
	N60295	Pipe Retainer - 41 Lg - ICT 10 Primary **(9555)**	4	4	4	4	4	4	4
19	N36440	Mount Plate - 9 Primary Tube Double	1	1	1	1	1	1	1
	N65840	Mount Plate - ICT 9 Primary(9365 - 9445)	1	1	1	1	1	1	1
	N51760	**Mount Plate - 10 Primary Tube Double (9555)**	**1**	**1**	**1**	**1**	**1**	**1**	**1**
	N60290	Mount Plate - ICT 10 Primary (9555)	1	1	1	1	1	1	1
20	* * * * *	Blank Off (See Section 9)	2	2	3	3	4	4	5
21	N62400	Pipe SS - 51 Lg (9365)	6	8	10	12	14	16	18
	N62401	Pipe SS - 63.25 (9445)	6	8	10	12	14	16	18
	N62402	Pipe SS - 63 Lg (9555)	6	8	10	12	14	16	18
22	N62403	Pipe SS - 154 Lg x 41.6 High (9365)	6	8	10	12	14	16	18
	N62404	Pipe SS - 173.13 Lg x 26.75 H (9445 prior to 2016)	6	8	10	12	14	16	18
	N62405	**Pipe SS - 180 7/8 Lg x 26 3/4 High (9445 - 2016)**	**6**	**8**	**10**	**12**	**14**	**16**	**18**
	N62406	Pipe SS - 172 5/8 Lg x 26 3/4 High (9555)	6	8	10	12	14	16	18
23	N15097	U-Bolt - 3/8 x 2 3/8 x 5	2	2	2	2	2	2	2
	S42354	U-Bolt - 3/8 x 3 x 5	2	2	2	2	2	2	2
	N15098	U-Bolt - 3/8 x 4 x 5	2	2	2	2	2	2	2
24	N36148	U-Bolt - 3/8 x 3 x 4 UL	2	2	2	2	2	2	2
25	N12882	Hex Bolt - 1/4 x 3 1/2	8	8	8	8	8	8	8
26	W-475	Hex Bolt - 3/8 x 1 Lg	2	2	2	2	2	2	2
	W-475	Hex Bolt - 3/8 x 1 Lg - Quad Steer	6	6	6	6	6	6	6
26A	W-480	Hex Bolt - 3/8 x 2 1/2 Lg - (9445 Quad Steer)	4	4	4	4	4	4	4
27	W-480	Hex Bolt - 3/8 x 2 1/2 Lg	4	4	4	4	4	4	4
28	W-514	Hex Nut - 3/8	14	14	14	14	14	14	14
29	W-523	Lockwasher - 3/8	14	14	14	14	14	14	14
30	N19428	Hose - 2.52 ID x 2.77 OD x 5 Lg	18	24	30	36	42	48	54
31	D-5489	Flatwasher - 13/32 ID x 13/16 OD x 16 Ga	8	8	8	8	8	8	8
32	R480055	Hose - 2 1/2 ID x 36 Lg	6	8	10	12	14	16	18
	R480055	Hose - 2 1/2 ID x 68 Lg (for Fan #2 if Dual Fans used)							
33	S27987	Hex Nut - 3/8 Flanged center lock	8	8	8	8	8	8	8
34	H10592	U-Bolt - 3/8 x 6 x 5 UL	2	2	2	2	2	2	2
35	N44682	Stand - Hose	1	1	1	1	1	1	1
36	N53880	Hose Holder - Extension (9365 Quad Steer)	1	1	1	1	1	1	1
37	W-187	Hex Bolt - 3/8 x 1 1/4 Lg - (9365 Quad Steer)	2	2	2	2	2	2	2
38	N56370	Bracket - Hose Holder (Quad Hitch on Drill)	1	1	1	1	1	1	1
39	N56371	Strap - Hose Holder (Quad Hitch on Drill)	1	1	1	1	1	1	1
40	N37049	Rubber Grip (Quad Hitch on Drill)	2	2	2	2	2	2	2
41	N69148	Support - Hydraulic Hoses	1	1	1	1	1	1	1

Note:
For Customers wanting regular painted steel pipes see Cross Reference Chart at end of section on page 10-48

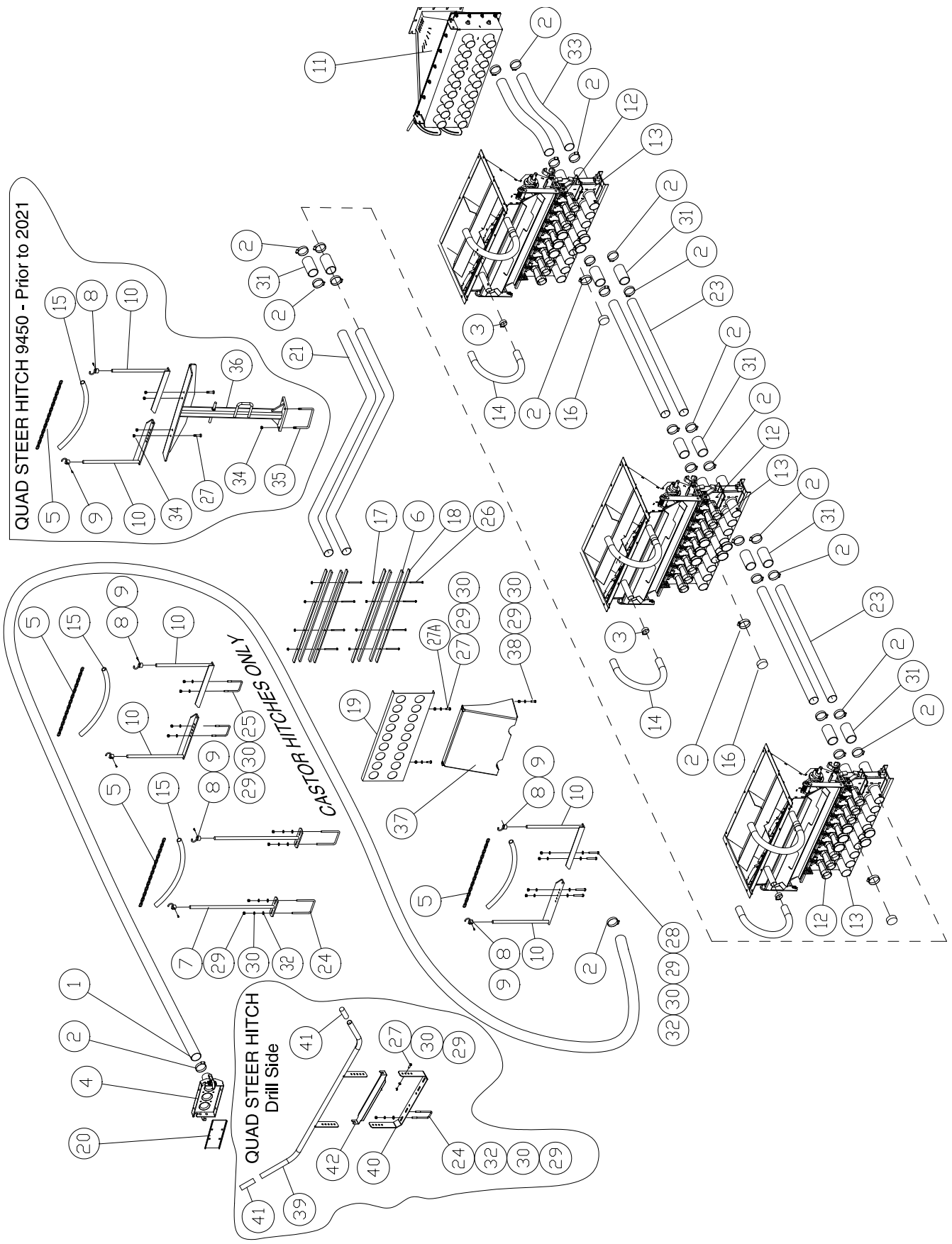
QUAD STEER HITCH 9450 - Prior to 2021
CASTOR HITCHES ONLY
QUAD STEER HITCH
Drill Side

Distribution Tow Behind - Double Shoot Three Tank 9450 - 9550 - 9680

Item	Part No.	Description	No. Used						
			Number of Primaries						
			3	4	5	6	7	8	9
1	R480055	Hose - 2 1/2 ID Goodyear x 17 ft	6	8	10	12	14	16	18
2	N11905	Hose Clamp - HS-44	168	182	196	210	224	238	252
3	N11906	Hose Clamp - 1 1/2 Dia	12	12	12	12	12	12	12
4	* * * * *	Hose Coupler (See Page 10-26 and 10-27)	2	2	3	3	4	4	5
5	N19448	Chain - 3/16 x 80 Links	3	3	3	3	3	3	3
6	N19449	Seal Strip - 3/8 x 1 x 2.583 ft	4	4	4	4	4	4	4
7	N19531	Support - 24 Lg	2	2	2	2	2	2	2
8	N19717	Chain Hook	6	6	6	6	6	6	6
9	N24396	Set Screw - 1/4 x 1/2 Lg Sq Head	6	6	6	6	6	6	6
10	N33834	Bracket	4	4	4	4	4	4	4
11	N37459	Plenum Assembly - 18 Outlet	1	1	1	1	1	1	1
12	* * * * *	Double Shoot Collector (See Section 9)	3	3	3	3	3	3	3
13	* * * * *	Single Shoot Collector (See Section 9)	3	3	3	3	3	3	3
14	R480101	Hose - 1 1/2 OD x 36 Lg	6	6	6	6	6	6	6
15	R480034	Hose - 0.929 ID x 1.169 OD x 18 Lg	3	3	3	3	3	3	3
16	N11907	Plastic Cap	84	70	56	42	28	14	0
17	D-5277	Flange Lock Nut - 1/4	8	8	8	8	8	8	8
18	N36146	Pipe Retainer - 32 Lg - 9 Primary	4	4	4	4	4	4	4
	N66423	Pipe Retainer - 37 Lg - ICT 9 Primary(9450-9550)	4	4	4	4	4	4	4
	N51640	**Pipe Retainer - 33 Lg - 10 Primary (9680)**	**4**	**4**	**4**	**4**	**4**	**4**	**4**
	N60295	Pipe Retainer - 41 Lg - ICT 10 Primary (**9680**)	4	4	4	4	4	4	4
19	N36440	Mount Plate - 9 Primary Tube Double	1	1	1	1	1	1	1
	N65840	Mount Plate - ICT 9 Primary(9450 - 9550)	1	1	1	1	1	1	1
	N51760	**Mount Plate - 10 Primary Tube Double (9680)**	**1**	**1**	**1**	**1**	**1**	**1**	**1**
	N60290	Mount Plate - ICT 10 Primary (9680)	1	1	1	1	1	1	1
20	* * * * *	Blank Off (See Section 9)	2	2	3	3	4	4	5
21	N62407	Pipe SS - 124 Lg x 41.6 High (9450)	6	8	10	12	14	16	18
	N62408	Pipe SS - 132 Lg x 26.75 High (9550 prior to 2016)	6	8	10	12	14	16	18
	N62409	**Pipe SS - 145 Lg x 26.75 High (9550 - 2016)**	**6**	**8**	**10**	**12**	**14**	**16**	**18**
	N62410	Pipe SS - 132 5/8 Lg x 26 3/4 High (9680)	6	8	10	12	14	16	18
22	* * * * *								
23	N62411	Pipe SS - 34 Lg (9450)	12	16	20	24	28	32	36
	N62412	Pipe SS - 63.25 Lg (9550)	12	16	20	24	28	32	36
	N62413	Pipe SS - 45 1/2 Lg (9680)	12	16	20	24	28	32	36
24	N15097	U-Bolt - 3/8 x 2 3/8 x 5	2	2	2	2	2	2	2
	S42354	U-Bolt - 3/8 x 3 x 5	2	2	2	2	2	2	2
	N15098	U-Bolt - 3/8 x 4 x 5	2	2	2	2	2	2	2
25	N36148	U-Bolt - 3/8 x 3 x 4 UL	2	2	2	2	2	2	2
26	N12882	Hex Bolt - 1/4 x 3 1/2	8	8	8	8	8	8	8
27	W-475	Hex Bolt - 3/8 x 1 Lg	2	2	2	2	2	2	2
	W-475	Hex Bolt - 3/8 x 1 Lg - Quad Steer	6	6	6	6	6	6	6
27A	W-480	Hex Bolt - 3/8 x 2 1/2 Lg - (9550)	4	4	4	4	4	4	4
28	W-480	Hex Bolt - 3/8 x 2 1/2 Lg	4	4	4	4	4	4	4
29	W-514	Hex Nut - 3/8	14	14	14	14	14	14	14
30	W-523	Lockwasher - 3/8	14	14	14	14	14	14	14
31	N19428	Hose - 2.52 ID x 2.77 OD x 5 Lg	30	40	50	60	70	80	90
32	D-5489	Flatwasher - 13/32 ID x 13/16 OD x 16 Ga	8	8	8	8	8	8	8
33	R480055	Hose - 2 1/2 ID x 36 Lg	6	8	10	12	14	16	18
	R480055	Hose - 2 1/2 ID x 68 Lg (for Fan #2 if Dual Fans used)							
34	S27987	Hex Nut - 3/8 Flanged center lock	8	8	8	8	8	8	8
35	H10592	U-Bolt - 3/8 x 6 x 5 UL	2	2	2	2	2	2	2
36	N44682	Stand - Hose	1	1	1	1	1	1	1
37	N53880	Hose Holder - Extension (9450 Quad Steer)	1	1	1	1	1	1	1
38	W-187	Hex Bolt - 3/8 x 1 1/4 Lg - (9450 Quad Steer)	2	2	2	2	2	2	2
39	N56370	Bracket - Hose Holder (Quad Hitch on Drill)	1	1	1	1	1	1	1
40	N56371	Strap - Hose Holder (Quad Hitch on Drill)	1	1	1	1	1	1	1
41	N37049	Rubber Grip (Quad Hitch on Drill)	2	2	2	2	2	2	2
42	N69148	Support - Hydraulic Hoses	1	1	1	1	1	1	1

Note:
For Customers wanting regular painted steel pipes see Cross Reference Chart at end of section on page 10-48

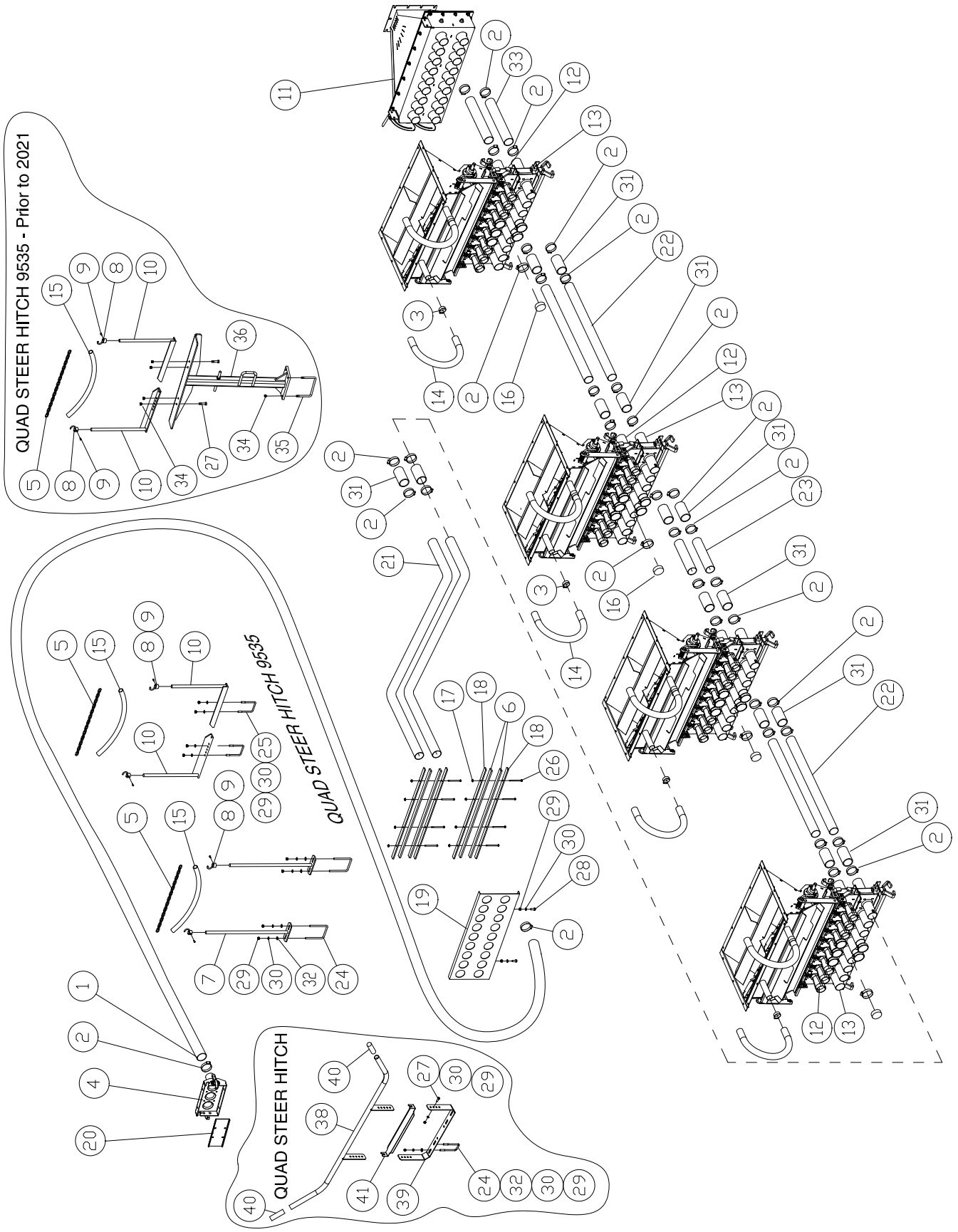
QUAD STEER HITCH 9535 - Prior to 2021
QUAD STEER HITCH 9535
QUAD STEER HITCH

Distribution Tow Behind - Double Shoot Four Tank 9535 - 9650 - 9800 - 91000

Item	Part No.	Description	No. Used — Number of Primaries						
			3	4	5	6	7	8	9
1	R480055	Hose - 2 1/2 ID Goodyear x 17 ft	6	8	10	12	14	16	18
2	N11905	Hose Clamp - HS-44	168	182	196	210	224	238	252
3	N11906	Hose Clamp - 1 1/2 Dia	12	12	12	12	12	12	12
4	* * * * *	Hose Coupler (See Page 10-26 and 10-27)	2	2	3	3	4	4	5
5	N19448	Chain - 3/16 x 80 Links	3	3	3	3	3	3	3
6	N19449	Seal Strip - 3/8 x 1 x 32 Lg (33 Lg for 9800 - 91000)	4	4	4	4	4	4	4
7	N19531	Support - 24 Lg	2	2	2	2	2	2	2
8	N19717	Chain Hook	6	6	6	6	6	6	6
9	N24396	Set Screw - 1/4 x 1/2 Lg Sq Head	6	6	6	6	6	6	6
10	N33834	Bracket	4	4	4	4	4	4	4
11	N37459	Plenum Assembly - 18 Outlet	1	1	1	1	1	1	1
12	* * * * *	Double Shoot Collector (See Section 9)	3	3	3	3	3	3	3
13	* * * * *	Single Shoot Collector (See Section 9)	3	3	3	3	3	3	3
14	R480101	Hose - 1 1/2 OD x 36 Lg	6	6	6	6	6	6	6
15	R480034	Hose - 0.929 ID x 1.169 OD x 18 Lg	3	3	3	3	3	3	3
16	N11907	Plastic Cap	84	70	56	42	28	14	0
17	D-5277	Flange Lock Nut - 1/4	8	8	8	8	8	8	8
18	N36146	Pipe Retainer - 32 Lg - 9 Primary	4	4	4	4	4	4	4
	N66423	Pipe Retainer - 37 Lg - ICT 9 Primary(9535 - 9650)	4	4	4	4	4	4	4
	N51640	**Pipe Retainer - 33 Lg - 10 Primary (9800 - 91000)**	**4**	**4**	**4**	**4**	**4**	**4**	**4**
	N60295	Pipe Retainer - 41 Lg - ICT 10 Primary(9800 - 91000)	4	4	4	4	4	4	4
19	N36440	Mount Plate - 9 Primary Double	1	1	1	1	1	1	1
	N65840	Mount Plate - ICT 9 Primary(9535 - 9650)	1	1	1	1	1	1	1
	N51760	**Mount Plate - 10 Primary Double (9800 - 91000)..**	**1**	**1**	**1**	**1**	**1**	**1**	**1**
	N60290	Mount Plate - ICT 10 Primary (9800 - 91000)	1	1	1	1	1	1	1
20	* * * * *	Blank Off (See Section 9)	2	2	3	3	4	4	5
21	N62414	Pipe SS - 95 Lg x 26.75 High (9650 prior to 2016)	6	8	10	12	14	16	18
	N62415	**Pipe SS - 109 Lg x 26.75 High (9650 - 2016) .....**	**6**	**8**	**10**	**12**	**14**	**16**	**18**
	N62416	Pipe SS - 84 Lg x 27.625 High (9535)	6	8	10	12	14	16	18
	N62417	Pipe SS - 92 3/4 Lg x 26 3/4 High (9800 - 91000)	6	8	10	12	14	16	18
22	N62412	Pipe SS - 42 3/4 Lg (9650)	12	16	20	24	28	32	36
	N62411	Pipe SS - 34 Lg (9535)	12	16	20	24	28	32	36
	N62413	Pipe SS - 45 1/2 Lg (9800 - 91000)	12	16	20	24	28	32	36
23	N62418	Pipe SS - 23 Lg (9650)	6	8	10	12	14	16	18
	N62419	Pipe SS - 17 Lg (9535)	6	8	10	12	14	16	18
	N62420	Pipe SS - 27 1/2 Lg (9800 - 91000)	6	8	10	12	14	16	18
24	N15097	U-Bolt - 3/8 x 2 3/8 x 5	2	2	2	2	2	2	2
	S42354	U-Bolt - 3/8 x 3 x 5	2	2	2	2	2	2	2
	N15098	U-Bolt - 3/8 x 4 x 5	2	2	2	2	2	2	2
25	N36148	U-Bolt - 3/8 x 3 x 4	2	2	2	2	2	2	2
26	N12882	Hex Bolt - 1/4 x 3 1/2	8	8	8	8	8	8	8
27	W-475	Hex Bolt - 3/8 x 1 Lg	4	4	4	4	4	4	4
28	W-480	Hex Bolt - 3/8 x 2 1/2 Lg (9650)	4	4	4	4	4	4	4
	W-187	Hex Bolt - 3/8 x 1 1/4 Lg (9535)	4	4	4	4	4	4	4
29	W-514	Hex Nut - 3/8	14	14	14	14	14	14	14
30	W-523	Lockwasher - 3/8	14	14	14	14	14	14	14
31	N19428	Hose - 2.52 ID x 2.77 OD x 5 Lg	30	40	50	60	70	80	90
32	D-5489	Flatwasher - 13/32 ID x 13/16 OD x 16 Ga	8	8	8	8	8	8	8
33	R480055	Hose - 2 1/2 ID x 36 Lg	6	8	10	12	14	16	18
	R480055	Hose - 2 1/2 ID x 68 Lg (for Fan #2 if Dual Fans used)							
34	S27987	Hex Nut - 3/8 Flanged center lock	8	8	8	8	8	8	8
35	H10592	U-Bolt - 3/8 x 6 x 5	2	2	2	2	2	2	2
36	N44682	Stand - Hose (9535) (9650 prior to 2016)	1	1	1	1	1	1	1
37	N62418	Distribution Pipe SS - 23 Lg	6	8	10	12	14	16	18
38	N56370	Bracket - Hose Holder (Quad Hitch on Drill)	1	1	1	1	1	1	1
39	N56371	Strap - Hose Holder (Quad Hitch on Drill)	1	1	1	1	1	1	1
40	N37049	Rubber Grip (Quad Hitch on Drill)	2	2	2	2	2	2	2
41	N69148	Support - Hydraulic Hoses	1	1	1	1	1	1	1

Note: For Customers wanting regular painted steel pipes see Cross Reference Chart at end of section on page 10-48

Distribution - Tow Between
Single Shoot - Two Tank 9365 - 9445 - 9555

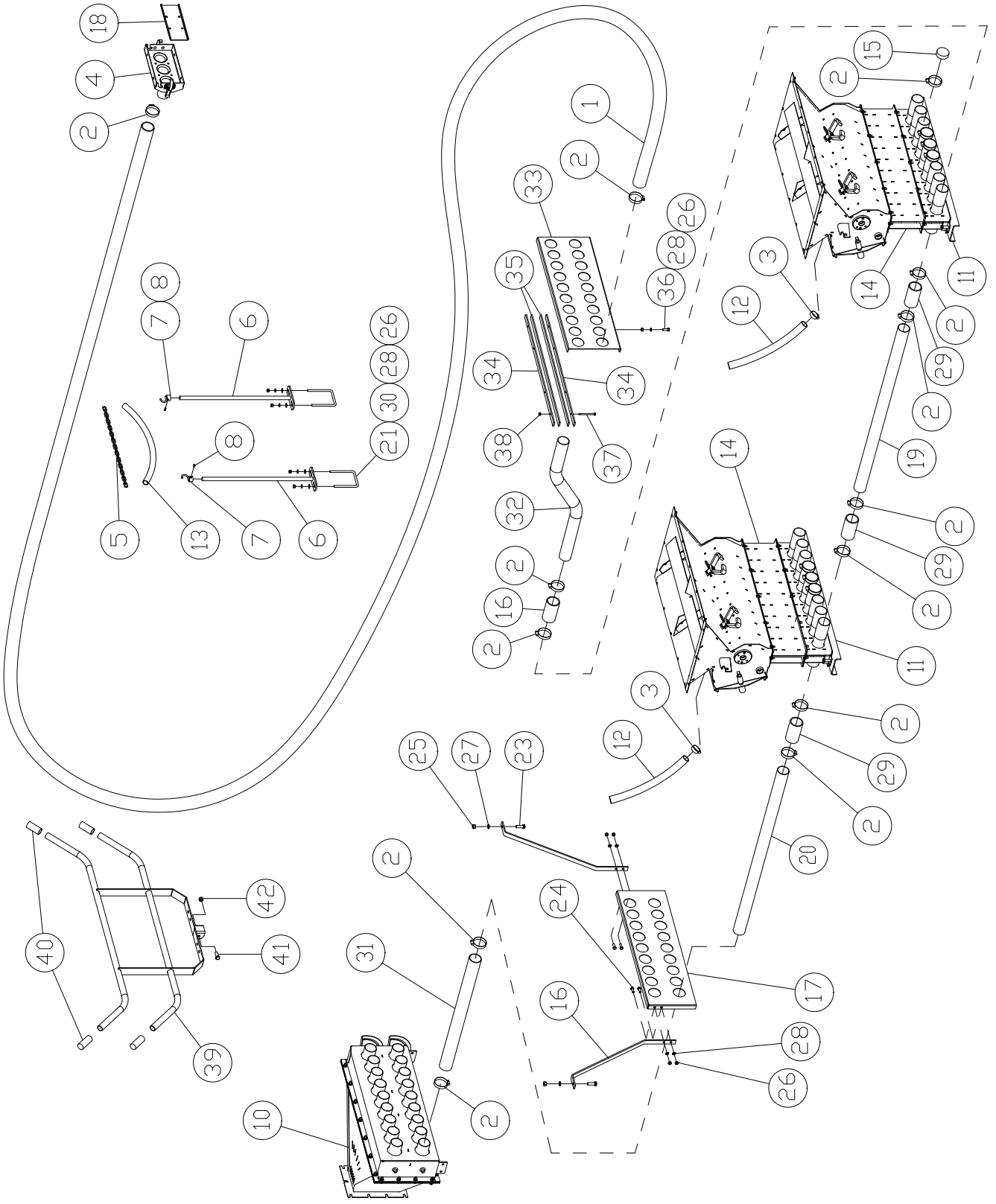

Distribution Tow Between - Single Shoot Two Tank 9365 - 9445 - 9555

Item	Part No.	Description	No. Used — Number of Primaries						
			3	4	5	6	7	8	9
1	R480055	Hose 2 1/2 ID Goodyear x 17 ft	3	4	5	6	7	8	9
2	N11905	Hose Clamp - HS-44	69	74	79	84	89	94	99
3	N11906	Hose Clamp - 1 1/2 Dia	8	8	8	8	8	8	8
4	* * * * *	Hose Coupler (See Page 10-26 and 10-27)	1	1	2	2	2	2	3
5	N19448	Chain - 3/16 x 80 Links	1	1	1	1	1	1	1
6	N19531	Support - 24 Lg	2	2	2	2	2	2	2
7	N19717	Chain Hook	2	2	2	2	2	2	2
8	N24396	Set Screw - 1/4 x 1/2 Lg Sq Head	2	2	2	2	2	2	2
9	* * * * *								
10	N37459	Plenum Assembly - 18 Outlet	1	1	1	1	1	1	1
11	* * * * *	Single Shoot Collector (See Section 9)	2	2	2	2	2	2	2
12	R480101	Hose - 1 1/2 OD x 36 Lg	4	4	4	4	4	4	4
13	R480034	Hose - 0.929 ID x 1.169 OD x 18 Lg	1	1	1	1	1	1	1
14	N37865	Single Shoot Collector Spacer	2	2	2	2	2	2	2
15	N11907	Plastic Cap	39	37	29	24	19	14	9
16	N40866	Hanger Strap (9365)	2	2	2	2	2	2	2
	N60792	Hanger Strap - ICT (9365)	2	2	2	2	2	2	2
	N49652	Hanger Strap (9445)	2	2	2	2	2	2	2
	N60791	Hanger Strap - ICT (9445)	2	2	2	2	2	2	2
	N55297	Hanger Strap (9555)	2	2	2	2	2	2	2
	N60591	Hanger Strap - ICT (9555)	2	2	2	2	2	2	2
17	N37950	Support Plate - 9 Primary - 34 wide	1	1	1	1	1	1	1
	N60790	Support Plate - ICT 9 Primary - 41 1/2 wide	1	1	1	1	1	1	1
	N55296	Support Plate - 10 Primary (9555) - 37 5/16 wide	1	1	1	1	1	1	1
	N60590	Support Plate - ICT 10 Primary (9555) - 45 3/4 wide	1	1	1	1	1	1	1
18	* * * * *	Blank Off (See Section 9)	1	1	2	2	2	2	3
19	N62400	Pipe SS - 51 Lg (9365)	3	4	5	6	7	8	9
	N62401	Pipe SS - 63.25 Lg (9445)	3	4	5	6	7	8	9
	N62402	Pipe SS - 63 Lg (9555)	3	4	5	6	7	8	9
20	N62421	Pipe SS - 68 Lg (9365)	3	4	5	6	7	8	9
	N62422	Pipe SS - 95 Lg(9445)	3	4	5	6	7	8	9
	N62402	Pipe SS - 63 Lg(9555)	3	4	5	6	7	8	9
21	N15098	U-Bolt - 3/8 x 4 x 5	2	2	2	2	2	2	2
22	* * * * *								
23	W-486	Hex Bolt - 1/2 x 1 1/2 Lg - 3/4 Lg Thread	2	2	2	2	2	2	2
24	W-475	Hex Bolt - 3/8 x 1 Lg	4	4	4	4	4	4	4
25	W-516	Hex Nut - 1/2	2	2	2	2	2	2	2
26	W-514	Hex Nut - 3/8	8	8	8	8	8	8	8
27	W-525	Lockwasher - 1/2	2	2	2	2	2	2	2
28	W-523	Lockwasher - 3/8	8	8	8	8	8	8	8
29	N19428	Hose - 2.52 ID x 2.77 OD x 5 Lg	9	12	15	18	21	24	27
30	D-5489	Washer - 13/32 ID x 13/16 OD x 16 Ga	4	4	4	4	4	4	4
31	R480055	Hose - 2 1/2 ID x 52 Lg	3	4	5	6	7	8	9
32	N62423	Pipe SS - 35 1/4 Lg x 7 High **(9555)**	3	4	5	6	7	8	9
33	N51760	Mount Plate - 10 Primary **(9555)**	1	1	1	1	1	1	1
	N60290	Mount Plate - ICT 10 Primary **(9555)**	1	1	1	1	1	1	1
34	N51640	Pipe Retainer - 33 Lg - 10 Primary **(9555)**	4	4	4	4	4	4	4
	N60295	Pipe Retainer - 41 Lg- ICT 10 Primary **(9555)**	4	4	4	4	4	4	4
35	N19449	Seal Strip - 3/8 x 1 x 33 Lg **(9555)**	4	4	4	4	4	4	4
36	W-479	Hex Bolt - 3/8 x 2 1/4 Lg **(9555)**	2	2	2	2	2	2	2
37	N12882	Hex Bolt - 1/4 x 3 1/2 Lg **(9555)**	8	8	8	8	8	8	8
38	D-5277	Flange Lock Nut - 1/4 **(9555)**	8	8	8	8	8	8	8
39	N53770	Bracket - Hose Holder **(9445 & 9555)**	1	1	1	1	1	1	1
40	N37049	Round Grip **(9445 & 9555)**	4	4	4	4	4	4	4
41	W-490	Hex Bolt - 1/2 x 2 1/2 Lg **(9445 & 9555)**	1	1	1	1	1	1	1
42	F-3405	Locknut - 1/2 Unitorque **(9445 & 9555)**	1	1	1	1	1	1	1

Note:
For Customers wanting regular painted steel pipes see Cross Reference Chart at end of section on page 10-48

Distribution - Tow Between
Single Shoot - Three Tank 9450 - 9550 - 9680

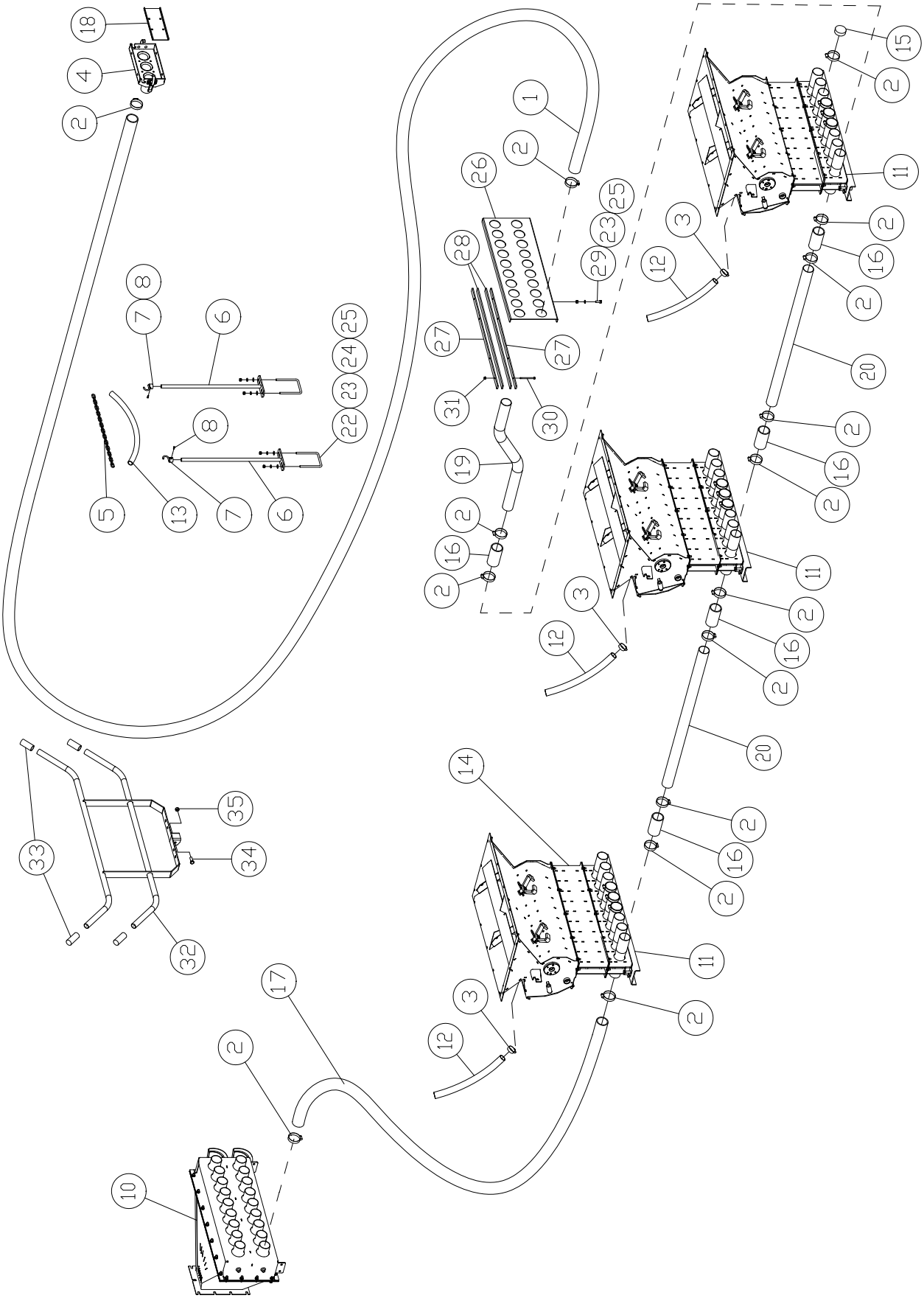

Distribution Tow Between - Single Shoot Three Tank Configuration

Item	Part No.	Description	No. Used — Number of Primaries 3	4	5	6	7	8	9
1	R480055	Hose - 2 1/2 ID Goodyear x 17 ft	3	4	5	6	7	8	9
2	N11905	Hose Clamp - HS-44	66	71	86	90	96	101	106
3	N11906	Hose Clamp - 1 1/2 Dia	12	12	12	12	12	12	12
4	* * * * *	Hose Coupler (See Page 10-26 and 10-27)	1	1	2	2	2	2	3
5	N19448	Chain - 3/16 x 80 Links	1	1	1	1	1	1	1
6	N19531	Support - 24 Lg	2	2	2	2	2	2	2
7	N19717	Chain Hook	2	2	2	2	2	2	2
8	N24396	Set Screw - 1/4 x 1/2 Lg Sq Head	2	2	2	2	2	2	2
9	* * * * *								
10	N37459	Plenum Assembly - 18 Outlet	1	1	1	1	1	1	1
11	* * * * *	Single Shoot Collector (See Section 9)	3	3	3	3	3	3	3
12	R480101	Hose - 1 1/2 OD x 36 Lg	6	6	6	6	6	6	6
13	R480034	Hose - 0.929 ID x 1.169 OD x 18 Lg	1	1	1	1	1	1	1
14	N37865	Single Shoot Collector Spacer	3	3	3	3	3	3	3
15	N11907	Plastic Cap	51	44	37	30	22	16	9
16	N19428	Hose - 2.52 ID x 2.77 OD x 5 Lg	12	16	20	24	28	32	36
	N19428	**Hose - 2.52 ID x 2.77 OD x 5 Lg (9680)**	**15**	**20**	**25**	**30**	**35**	**40**	**45**
17	R480055	Hose - 2 1/2 ID x 90 Lg	3	4	5	6	7	8	9
18	* * * * *	Blank Off (See Section 9)	1	1	2	2	2	2	3
19	N62423	Distribution Pipe SS - 35 1/4 Lg x 7 High **(9680)**	3	4	5	6	7	8	9
20	N62411	Distribution Pipe SS - 34 Lg (9450)	6	8	10	12	14	16	18
	N62412	Distribution Pipe SS - 42 3/4 Lg (9550)	6	8	10	12	14	16	18
	N62413	Distribution Pipe SS - 45 1/2 Lg (9680)	6	8	10	12	14	16	18
21	* * * * *								
22	N15098	U-Bolt - 3/8 x 4 x 5 UL	2	2	2	2	2	2	2
23	W-523	Lockwasher - 3/8	4	4	4	4	4	4	4
24	D-5489	Flatwasher - 13/32 ID x 13/16 OD x 16 Ga	4	4	4	4	4	4	4
25	W-514	Hex Nut - 3/8	4	4	4	4	4	4	4
26	N51760	Mount Plate - 10 Primary **(9680)**	1	1	1	1	1	1	1
	N60290	Mount Plate - ICT 10 Primary **(9680)**	1	1	1	1	1	1	1
27	N51640	Pipe Retainer - 33 Lg - 10 Primary **(9680)**	4	4	4	4	4	4	4
	N60295	Pipe Retainer - 41 Lg - ICT 10 Primary **(9680)**	4	4	4	4	4	4	4
28	N19449	Seal Strip - 3/8 x 1 x 33 Lg **(9680)**	4	4	4	4	4	4	4
29	W-479	Hex Bolt - 3/8 x 2 1/4 Lg **(9680)**	2	2	2	2	2	2	2
30	N12882	Hex Bolt - 1/4 x 3 1/2 Lg **(9680)**	8	8	8	8	8	8	8
31	D-5277	Flange Lock Nut - 1/4 **(9680)**	8	8	8	8	8	8	8
32	N53770	Bracket - Hose Holder **(9550 & 9680)**	1	1	1	1	1	1	1
33	N37049	Round Grip **(9550 & 9680)**	4	4	4	4	4	4	4
34	W-490	Hex Bolt - 1/2 x 2 1/2 Lg **(9550 & 9680)**	1	1	1	1	1	1	1
35	F-3405	Locknut - 1/2 Unitorque **(9550 & 9680)**	1	1	1	1	1	1	1

Note:
For Customers wanting regular painted steel pipes see Cross Reference Chart at end of section on page 10-48

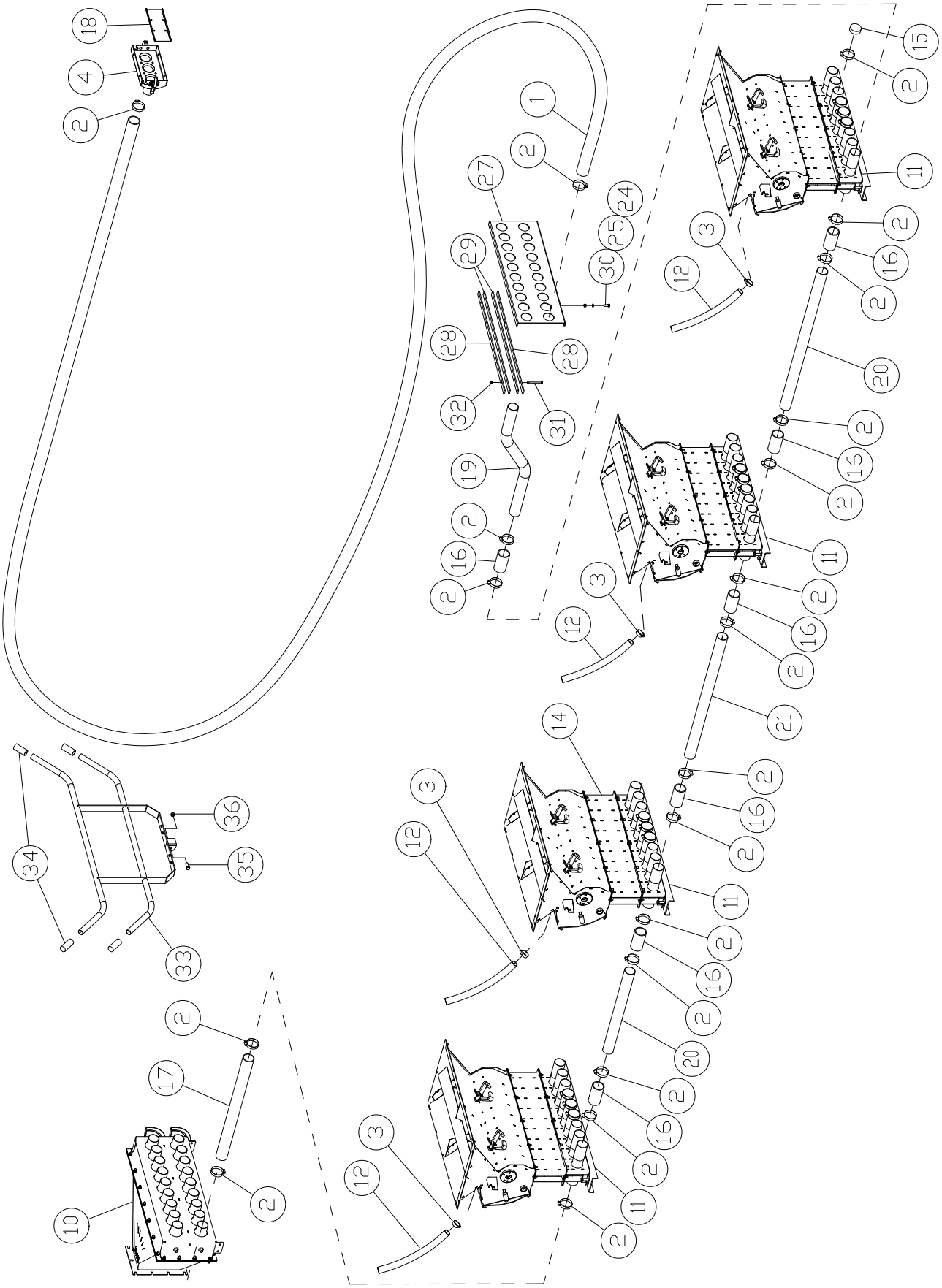
18
4
2
1
2
27
29
28
28
32
31
19
2
16
2
30
25
24
15
2
11
3
12
2
16
2
20
2
16
2
11
3
12
2
16
2
21
14
3
12
2
16
2
11
2
16
2
20
2
16
2
11
3
12
2
34
36
35
33
2
17
2
10

Distribution Tow Between - Single Shoot Four Tank 9650 - 9800

Item	Part No.	Description	No. Used						
			Number of Primaries						
			3	4	5	6	7	8	9
1	R480055	Hose - 2 1/2 ID Goodyear x 17 ft	3	4	5	6	7	8	9
2	N11905	Hose Clamp - HS-44	72	79	96	102	110	117	124
3	N11906	Hose Clamp - 1 1/2 Dia	12	12	12	12	12	12	12
4	* * * * *	Hose Coupler (See Page 10-26 and 10-27)	1	1	2	2	2	2	3
5	* * * * *								
6	* * * * *								
7	* * * * *								
8	* * * * *								
9	* * * * *								
10	N37459	Plenum Assembly - 18 Outlet	1	1	1	1	1	1	1
11	* * * * *	Single Shoot Collector (See Section 9)	4	4	4	4	4	4	4
12	R480101	Hose - 1 1/2 OD x 36 Lg	8	8	8	8	8	8	8
13	* * * * *								
14	N37865	Single Shoot Collector Spacer	3	3	3	3	3	3	3
15	N11907	Plastic Cap	51	44	37	30	22	16	9
16	N19428	Hose - 2.52 ID x 2.77 OD x 5 Lg	15	20	25	30	35	40	45
17	R480055	Hose - 2 1/2 ID x 36 Lg	3	4	5	6	7	8	9
18	* * * * *	Blank Off (See Section 9)	1	1	2	2	2	2	3
19	N62423	Distribution Pipe SS - 35 1/4 Lg x 7 High **(9800)**	3	4	5	6	7	8	9
20	N62412	Distribution Pipe SS - 42 3/4 Lg(9650)	6	8	10	12	14	16	18
	N62413	Distribution Pipe SS - 45 1/2 Lg (9800)	6	8	10	12	14	16	18
21	N62418	Distribution Pipe SS - 23 Lg (9650)	3	4	5	6	7	8	9
	N62420	Distribution Pipe SS - 27 1/2 Lg (9800)	3	4	5	6	7	8	9
22	* * * * *								
23	* * * * *								
24	* * * * *								
25	W-523	Lockwasher - 3/8	4	4	4	4	4	4	4
26	* * * * *								
27	N51760	Mount Plate - 10 Primary **(9800)**	1	1	1	1	1	1	1
	N60290	Mount Plate - ICT 10 Primary **(9800)**	1	1	1	1	1	1	1
28	N51640	Pipe Retainer - 33 Lg - 10 Primary **(9800)**	4	4	4	4	4	4	4
	N60295	Pipe Retainer - 41 Lg - ICT 10 Primary **(9800)**	4	4	4	4	4	4	4
29	N19449	Seal Strip - 3/8 x 1 x 33 Lg **(9800)**	4	4	4	4	4	4	4
30	W-479	Hex Bolt - 3/8 x 2 1/4 Lg **(9800)**	2	2	2	2	2	2	2
31	N12882	Hex Bolt - 1/4 x 3 1/2 Lg **(9800)**	8	8	8	8	8	8	8
32	D-5277	Flange Lock Nut - 1/4 **(9800)**	8	8	8	8	8	8	8
33	N53770	Bracket - Hose Holder **(9650 & 9800)**	1	1	1	1	1	1	1
34	N37049	Round Grip **(9650 & 9800)**	4	4	4	4	4	4	4
35	W-490	Hex Bolt - 1/2 x 2 1/2 Lg **(9650 & 9800)**	1	1	1	1	1	1	1
36	F-3405	Locknut - 1/2 Unitorque **(9650 & 9800)**	1	1	1	1	1	1	1

Note:
For Customers wanting regular painted steel pipes see Cross Reference Chart at end of section on page 10-48

Distribution - Tow Between
Double Shoot - Two Tank 9365 - 9445 - 9555

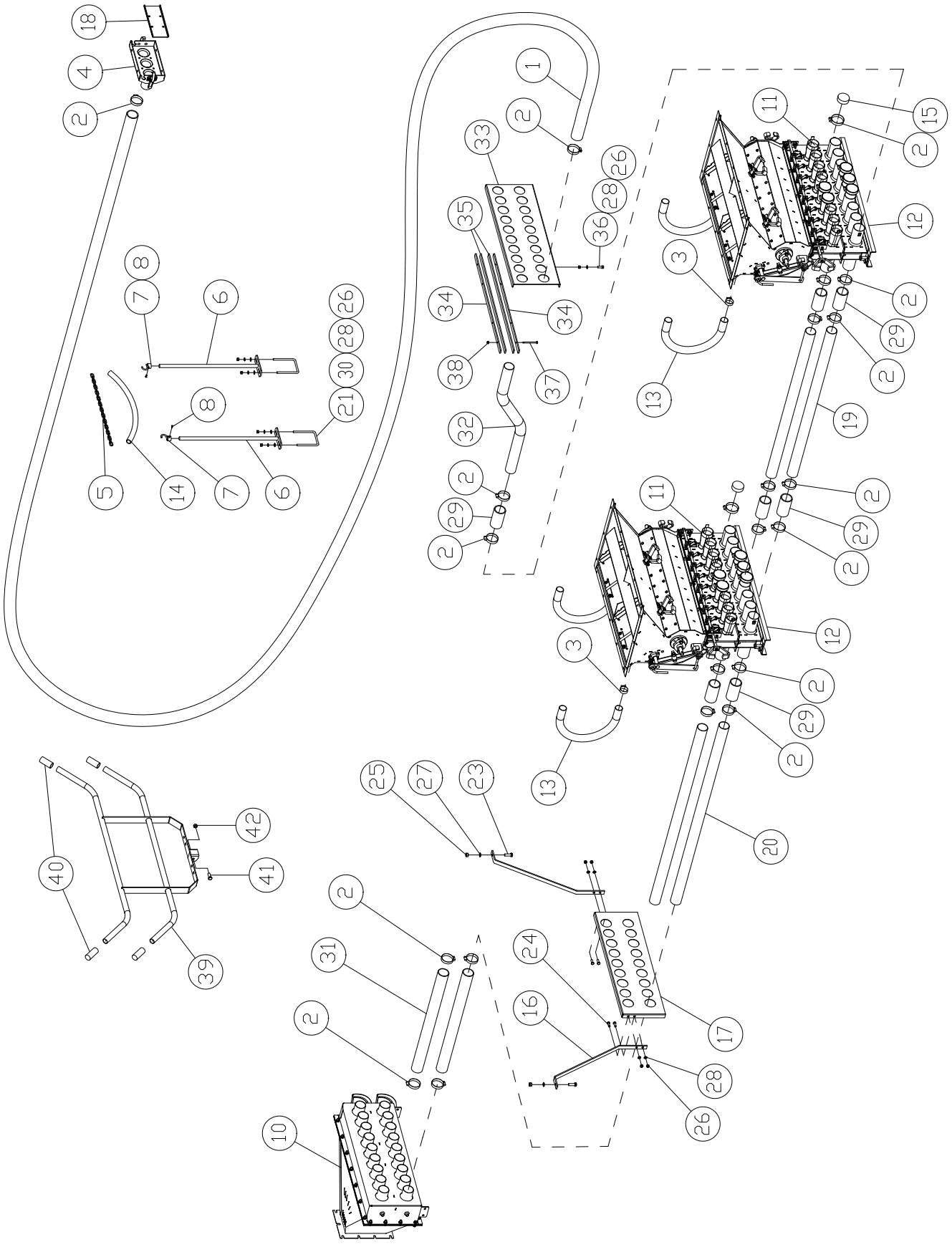

Distribution Tow Between - Double Shoot Two Tank 9365 - 9445 - 9555

Item	Part No.	Description	No. Used — Number of Primaries						
			3	4	5	6	7	8	9
1	R480055	Hose - 2 1/2 ID Goodyear x 17 ft	6	8	10	12	14	16	18
2	N11905	Hose Clamp - HS-44	120	130	140	150	160	170	180
3	N11906	Hose Clamp - 1 1/2 Dia	8	8	8	8	8	8	8
4	* * * * *	Hose Coupler (See Page 10-26 and 10-27)	2	2	3	3	4	4	5
5	N19448	Chain - 3/16 x 80 Links	1	1	1	1	1	1	1
6	N19531	Support - 24 Lg	2	2	2	2	2	2	2
7	N19717	Chain Hook	2	2	2	2	2	2	2
8	N24396	Set Screw - 1/4 x 1/2 Lg Sq Head	2	2	2	2	2	2	2
9	* * * * *								
10	N37459	Plenum Assembly - 18 Outlet	1	1	1	1	1	1	1
11	* * * * *	Double Shoot Collector (See Section 9)	2	2	2	2	2	2	2
12	* * * * *	Single Shoot Collector (See Section 9)	2	2	2	2	2	2	2
13	R480101	Hose - 1 1/2 OD x 36 Lg	4	4	4	4	4	4	4
14	R480034	Hose - 0.929 ID x 1.169 OD x 18 Lg	1	1	1	1	1	1	1
15	N11907	Plastic Cap	60	50	40	30	20	10	0
16	N40866	Hanger Strap (9365)	2	2	2	2	2	2	2
	N60792	Hanger Strap - ICT (9365)	2	2	2	2	2	2	2
	N49652	Hanger Strap (9445)	2	2	2	2	2	2	2
	N60791	Hanger Strap - ICT (9445)	2	2	2	2	2	2	2
	N55297	Hanger Strap (9555)	2	2	2	2	2	2	2
	N60591	Hanger Strap - ICT (9555)	2	2	2	2	2	2	2
17	N37950	Support Plate - 9 Primary - 34 wide	1	1	1	1	1	1	1
	N60790	Support Plate - ICT 9 Primary - 41 1/2 wide	1	1	1	1	1	1	1
	N55296	Support Plate - 10 Primary (9555) - 37 5/16 wide	1	1	1	1	1	1	1
	N60590	Support Plate - ICT 10 Primary (9555) - 45 3/4 wide	1	1	1	1	1	1	1
18	* * * * *	Blank Off (See Section 9)	2	2	3	3	4	4	5
19	N62421	Distribution Pipe SS - 68 Lg (9365)	6	8	10	12	14	16	18
	N62401	Distribution Pipe SS - 63.25 Lg (9445)	6	8	10	12	14	16	18
	N62402	Distribution Pipe SS - 63 Lg (9555)	6	8	10	12	14	16	18
20	N62400	Distribution Pipe SS - 51 Lg (9365)	6	8	10	12	14	16	18
	N62422	Distribution Pipe SS - 95 Lg(9445)	6	8	10	12	14	16	18
	N62402	Distribution Pipe SS - 63 Lg(9555)	6	8	10	12	14	16	18
21	N15098	U-Bolt - 3/8 x 4 x 5 UL	2	2	2	2	2	2	2
22	* * * * *								
23	W-486	Hex Bolt - 1/2 x 1 1/2 Lg - 3/4 Lg Thread	2	2	2	2	2	2	2
24	W-475	Hex Bolt - 3/8 x 1 Lg	4	4	4	4	4	4	4
25	W-516	Hex Nut - 1/2	2	2	2	2	2	2	2
26	W-514	Hex Nut - 3/8	8	8	8	8	8	8	8
27	W-525	Lockwasher - 1/2	2	2	2	2	2	2	2
28	W-523	Lockwasher - 3/8	8	8	8	8	8	8	8
29	N19428	Hose - 2.52 ID x 2.77 OD x 5 Lg	18	24	30	36	42	48	54
30	D-5489	Flatwasher - 13/32 ID x 13/16 OD x 16 Ga	4	4	4	4	4	4	4
31	R480055	Hose - 2 1/2 ID x 52 Lg	6	8	10	12	14	16	18
32	N62423	Distribution Pipe SS - 35 1/4 Lg x 7 High **(9555)**	6	8	10	12	14	16	18
33	N51760	Mount Plate - 10 Primary **(9555)**	1	1	1	1	1	1	1
	N60290	Mount Plate - ICT 10 Primary **(9555)**	1	1	1	1	1	1	1
34	N51640	Pipe Retainer - 33 Lg - 10 Primary **(9555)**	4	4	4	4	4	4	4
	N60295	Pipe Retainer - 41 Lg - ICT 10 Primary **(9555)**	4	4	4	4	4	4	4
35	N19449	Seal Strip - 3/8 x 1 x 33 Lg **(9555)**	4	4	4	4	4	4	4
36	W-479	Hex Bolt - 3/8 x 2 1/4 Lg **(9555)**	2	2	2	2	2	2	2
37	N12882	Hex Bolt - 1/4 x 3 1/2 Lg **(9555)**	8	8	8	8	8	8	8
38	D-5277	Flange Lock Nut - 1/4 **(9555)**	8	8	8	8	8	8	8
39	N53770	Bracket - Hose Holder **(9555)**	1	1	1	1	1	1	1
40	N37049	Round Grip **(9555)**	4	4	4	4	4	4	4
41	W-490	Hex Bolt - 1/2 x 2 1/2 Lg **(9555)**	1	1	1	1	1	1	1
42	F-3405	Locknut - 1/2 Unitorque **(9555)**	1	1	1	1	1	1	1
		Note: **For Customers wanting regular painted steel pipes see Cross Reference Chart at end of section on page 10-48**							

Distribution - Tow Between
Double Shoot - Three Tank 9450 - 9550 - 9680

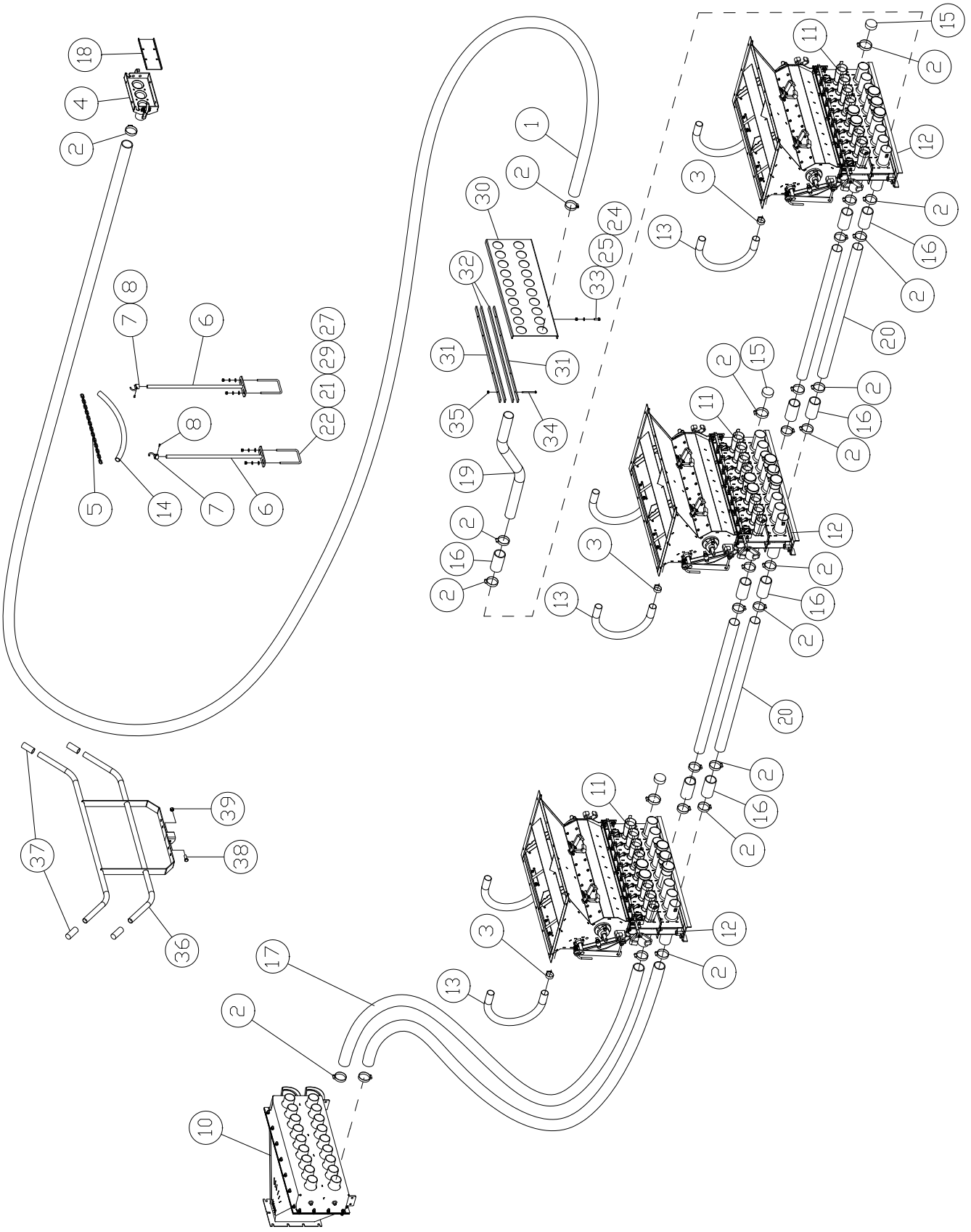

Distribution Tow Between - Double Shoot Three Tank 9450 - 9550 - 9680

Item	Part No.	Description	No. Used Number of Primaries 3	4	5	6	7	8	9
1	R480055	Hose - 2 1/2 ID Goodyear x 17 ft	6	8	10	12	14	16	18
2	N11905	Hose Clamp - HS-44	156	166	176	186	196	206	216
	N11905	**Hose Clamp - HS-44 (9680)**	**162**	**174**	**186**	**198**	**210**	**222**	**234**
3	N11906	Hose Clamp - 1 1/2 Dia	12	12	12	12	12	12	12
4	* * * * *	Hose Coupler (See Page 10-26 and 10-27)	2	2	3	3	4	4	5
5	N19448	Chain - 3/16 x 80 Links	1	1	1	1	1	1	1
6	N19531	Support - 24 Lg	2	2	2	2	2	2	2
7	N19717	Chain Hook	2	2	2	2	2	2	2
8	N24396	Set Screw - 1/4 x 1/2 Lg Sq Head	2	2	2	2	2	2	2
9	* * * * *								
10	N37459	Plenum Assembly - 18 Outlet	1	1	1	1	1	1	1
11	* * * * *	Double Shoot Collector (See Section 9)	3	3	3	3	3	3	3
12	* * * * *	Single Shoot Collector (See Section 9)	3	3	3	3	3	3	3
13	R480101	Hose - 1 1/2 OD x 36 Lg	6	6	6	6	6	6	6
14	R480034	Hose - 0.929 ID x 1.169 OD x 18 Lg	1	1	1	1	1	1	1
15	N11907	Plastic Cap	84	70	56	42	28	14	0
16	N19428	Hose - 2.52 ID x 2.77 OD x 5 Lg	24	32	40	48	56	64	72
	N19428	**Hose - 2.52 ID x 2.77 OD x 5 Lg (9680)**	**30**	**40**	**50**	**60**	**70**	**80**	**90**
17	R480055	Hose - 2 1/2 ID x 90 Lg	6	8	10	12	14	16	18
18	* * * * *	Blank Off (See Section 9)	2	2	3	3	4	4	5
19	N62423	Distribution Pipe SS - 35 1/4 Lg x 7 High **(9680)**	6	8	10	12	14	16	18
20	N62411	Distribution Pipe SS - 34 Lg(9450)	12	16	20	24	28	32	36
	N62412	Distribution Pipe SS - 42 3/4Lg (9550)	12	16	20	24	28	32	36
	N62413	Distribution Pipe SS - 45 1/2 Lg (9680)	12	16	20	24	28	32	36
21	D-5489	Flatwasher - 13/32 ID x 13/16 OD x 16 Ga	4	4	4	4	4	4	4
22	* * * * *								
23	N36148	U-Bolt - 3/8 x 3 x 4 UL	2	2	2	2	2	2	2
24	W-486	Hex Bolt - 1/2 x 1 1/2 Lg - 3/4 Lg Thread	2	2	2	2	2	2	2
25	W-475	Hex Bolt - 3/8 x 1 Lg	4	4	4	4	4	4	4
26	W-516	Hex Nut - 1/2	2	2	2	2	2	2	2
27	W-514	Hex Nut - 3/8	8	8	8	8	8	8	8
28	W-525	Lockwasher - 1/2	2	2	2	2	2	2	2
29	W-523	Lockwasher - 3/8	8	8	8	8	8	8	8
30	N51760	Mount Plate - 10 Primary **(9680)**	1	1	1	1	1	1	1
	N60290	Mount Plate - ICT 10 Primary **(9680)**	1	1	1	1	1	1	1
31	N51640	Pipe Retainer - 33 Lg - 10 Primary **(9680)**	4	4	4	4	4	4	4
	N60295	Pipe Retainer - 41 Lg - ICT 10 Primary **(9680)**	4	4	4	4	4	4	4
32	N19449	Seal Strip - 3/8 x 1 x 33 Lg **(9680)**	4	4	4	4	4	4	4
33	W-479	Hex Bolt - 3/8 x 2 1/4 Lg **(9680)**	2	2	2	2	2	2	2
34	N12882	Hex Bolt - 1/4 x 3 1/2 Lg **(9680)**	8	8	8	8	8	8	8
35	D-5277	Flange Lock Nut - 1/4 **(9680)**	8	8	8	8	8	8	8
36	N53770	Bracket - Hose Holder **(9680)**	1	1	1	1	1	1	1
37	N37049	Round Grip **(9680)**	4	4	4	4	4	4	4
38	W-490	Hex Bolt - 1/2 x 2 1/2 Lg **(9680)**	1	1	1	1	1	1	1
39	F-3405	Locknut - 1/2 Unitorque **(9680)**	1	1	1	1	1	1	1

Note:
For Customers wanting regular painted steel pipes see Cross Reference Chart at end of section on page 10-48

Distribution - Tow Between
Double Shoot - Four Tank Configuration

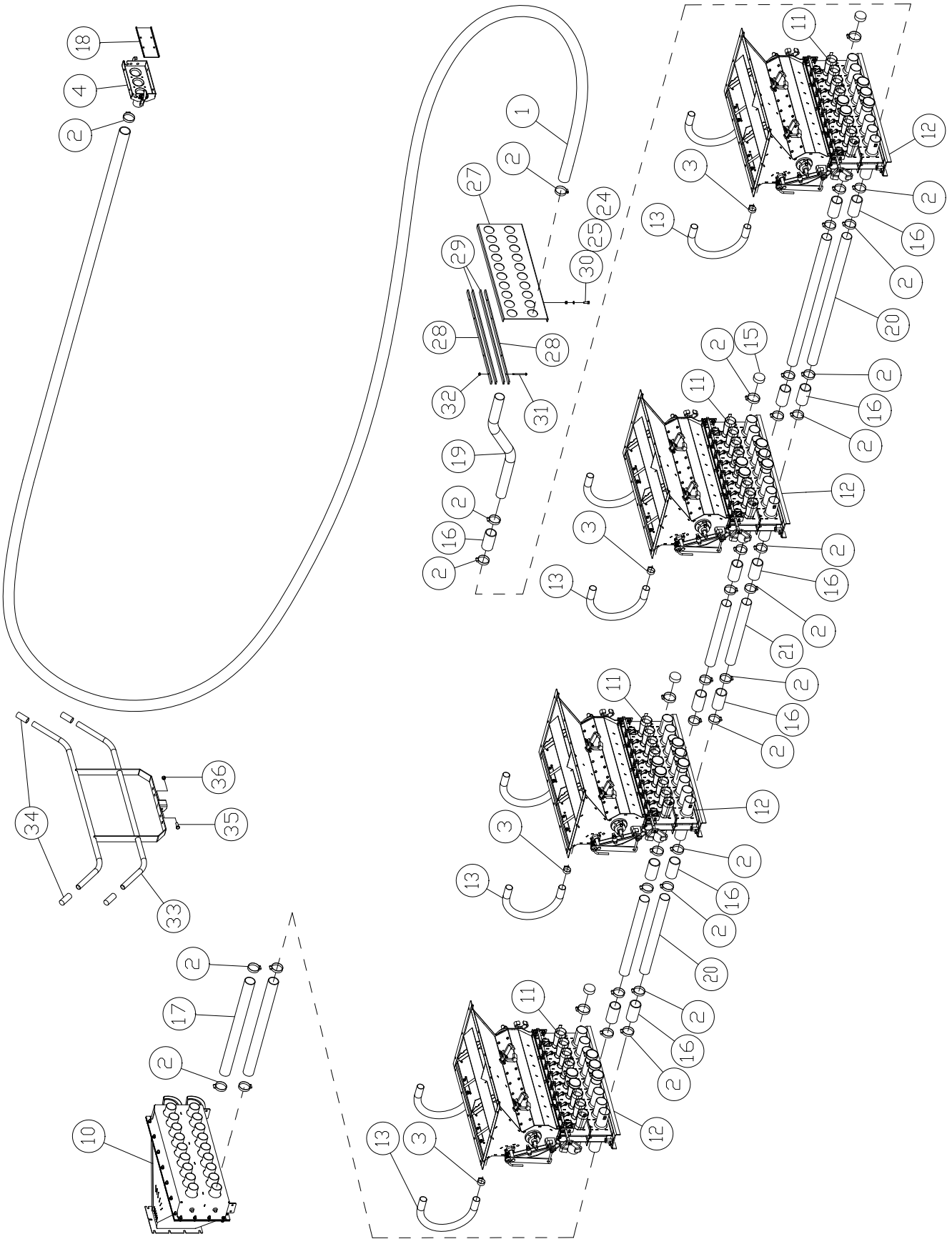

Distribution Tow Between - Double Shoot Four Tank Configuration

Item	Part No.	Description	No. Used — Number of Primaries 3	4	5	6	7	8	9
1	R480055	Hose - 2 1/2 ID Goodyear x 17 ft	6	8	10	12	14	16	18
2	N11905	Hose Clamp - HS-44	204	218	232	246	260	274	288
	N11905	**Hose Clamp - HS-44 (9800)**	**216**	**234**	**252**	**270**	**288**	**306**	**324**
3	N11906	Hose Clamp - 1 1/2 Dia	12	12	12	12	12	12	12
4	* * * * *	Hose Coupler (See Page 10-26 and 10-27)	2	2	3	3	4	4	5
5	* * * * *								
6	* * * * *								
7	* * * * *								
8	* * * * *								
9	* * * * *								
10	N37459	Plenum Assembly - 18 Outlet	1	1	1	1	1	1	1
11	* * * * *	Double Shoot Collector (See Section 9)	3	3	3	3	3	3	3
12	* * * * *	Single Shoot Collector (See Section 9)	3	3	3	3	3	3	3
13	R480101	Hose - 1 1/2 OD x 36 Lg	6	6	6	6	6	6	6
14	* * * * *								
15	N11907	Plastic Cap	108	90	72	54	36	18	0
16	N19428	Hose - 2.52 ID x 2.77 OD x 5 Lg	36	48	60	72	84	96	108
	N19428	**Hose - 2.52 ID x 2.77 OD x 5 Lg (9800)**	**42**	**56**	**70**	**84**	**98**	**112**	**126**
17	R480055	Hose - 2 1/2 ID x 36 Lg	6	8	10	12	14	16	18
18	* * * * *	Blank Off (See Section 9)	2	2	3	3	4	4	5
19	N62423	Distribution Pipe SS - 35 1/4 Lg x 7 High **(9800)**	6	8	10	12	14	16	18
20	N62412	Distribution Pipe SS - 42 3/4 Lg(9650)	12	16	20	24	28	32	36
	N62413	Distribution Pipe SS - 45 1/2 Lg **(9800)**	6	8	10	12	14	16	18
21	N62418	Distribution Pipe SS - 23 Lg (9650)	6	8	10	12	14	16	18
	N62420	Distribution Pipe SS - 27 1/2 Lg **(9800)**	6	8	10	12	14	16	18
22	N15098	U-Bolt - 3/8 x 4 x 5 UL	2	2	2	2	2	2	2
23	* * * * *								
24	* * * * *								
25	* * * * *								
26	* * * * *								
27	N51760	Mount Plate - 10 Primary **(9800)**	1	1	1	1	1	1	1
	N60290	Mount Plate - ICT 10 Primary **(9800)**	1	1	1	1	1	1	1
28	N51640	Pipe Retainer - 33 Lg - 10 Primary **(9800)**	4	4	4	4	4	4	4
	N60295	Pipe Retainer - 41 Lg - ICT 10 Primary **(9800)**	4	4	4	4	4	4	4
29	N19449	Seal Strip - 3/8 x 1 x 33 Lg **(9800)**	4	4	4	4	4	4	4
30	W-479	Hex Bolt - 3/8 x 2 1/4 Lg **(9800)**	2	2	2	2	2	2	2
31	N12882	Hex Bolt - 1/4 x 3 1/2 Lg **(9800)**	8	8	8	8	8	8	8
32	D-5277	Flange Lock Nut - 1/4 **(9800)**	8	8	8	8	8	8	8
33	N53770	Bracket - Hose Holder **(9800)**	1	1	1	1	1	1	1
34	N37049	Round Grip **(9800)**	4	4	4	4	4	4	4
35	W-490	Hex Bolt - 1/2 x 2 1/2 Lg **(9800)**	1	1	1	1	1	1	1
36	F-3405	Locknut - 1/2 Unitorque **(9800)**	1	1	1	1	1	1	1

Note:
For Customers wanting regular painted steel pipes see Cross Reference Chart at end of section on page 10-48

Quick Coupler
3 Outlet

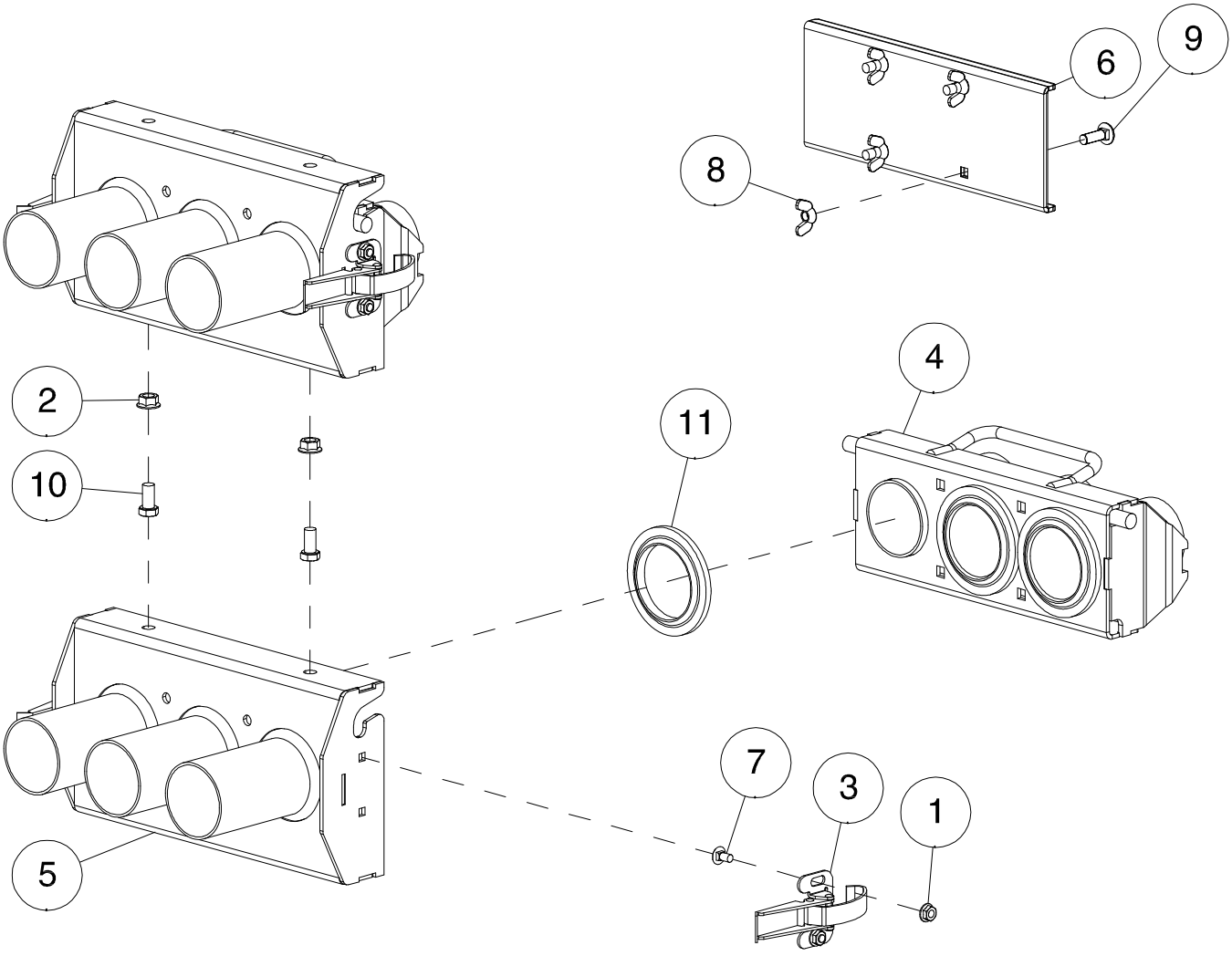

Item	Part No.	Description	Qty
1	D-5277	Flange Lock Nut - 1/4 UNC Serrated	8
2	D-5279	Flange Lock Nut - 3/8 UNC Serrated	2
3	N42213	Latch	4
4	N51983	Quick Coupler - 3 Run - Cart - Contains Item 11	2
5	N53200	Quick Coupler - 3 Run - Drill	2
6	N53207	Cover Plate - 3 Run	2
7	N53215	Carriage Bolt - 1/4 x 1/2 Lg	8
8	S-747	Wing Nut - 5/16	8
9	S33420	Carriage Bolt - 5/16 x 1 Lg	8
10	W-867	Hex Bolt - 3/8 x 3/4 Lg	2
11	N40735	Washer Seal	6
	N16170	Clear Silicon 305ml - used to assemble 11 to 4	As Req

Quick Coupler
5 Outlet

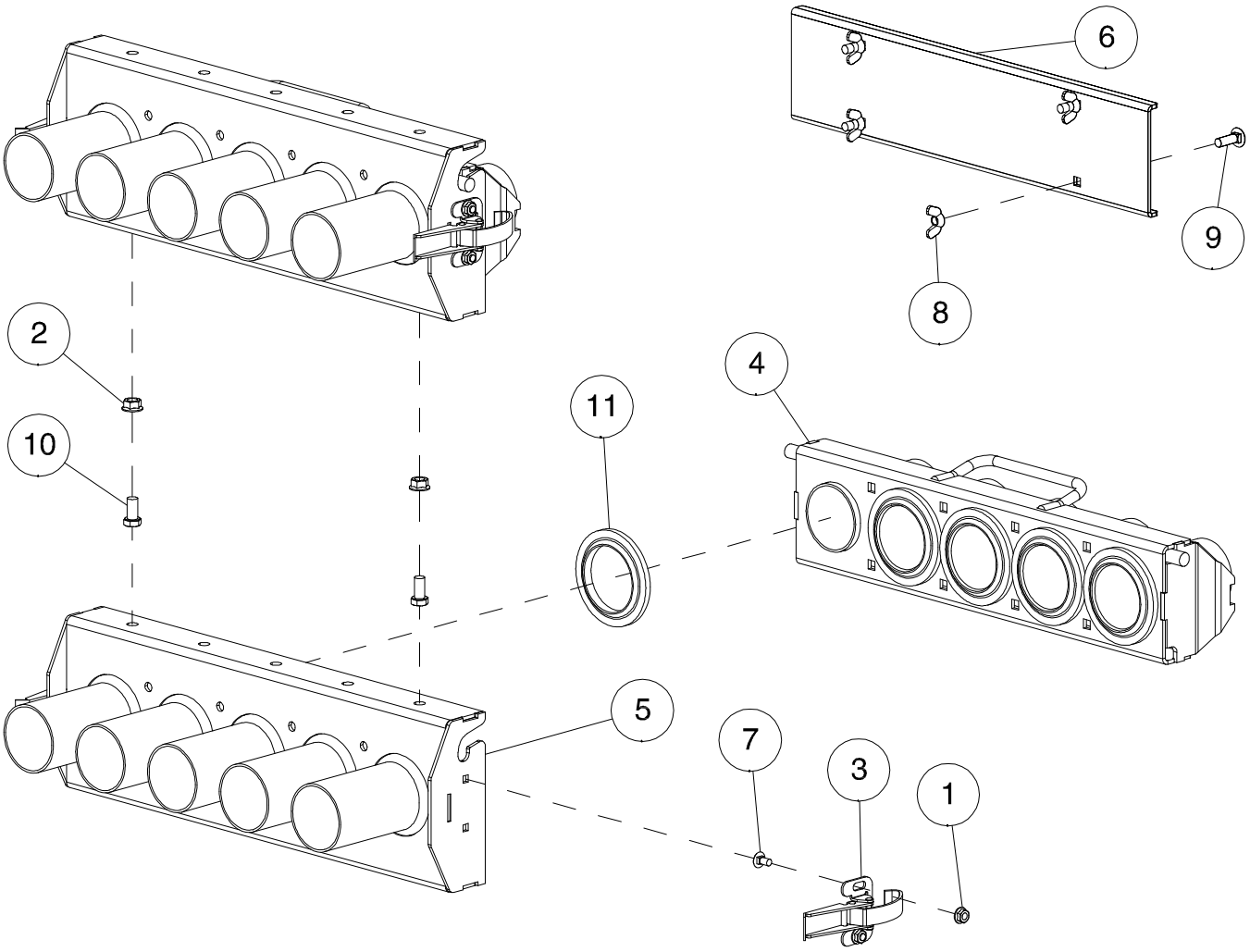

Item	Part No.	Description	Qty
1	D-5277	Flange Lock Nut - 1/4 UNC Serrated	8
2	D-5279	Flange Lock Nut - 3/8 UNC Serrated	2
3	N42213	Latch	4
4	N51955	Quick Coupler - 5 Run - Cart - Contains Item 11	2
5	N51960	Quick Coupler - 5 Run - Drill	2
6	N53209	Cover Plate - 5 Run	2
7	N53215	Carriage Bolt - 1/4 x 1/2 Lg	8
8	S-747	Wing Nut - 5/16	8
9	S33420	Carriage Bolt - 5/16 x 1 Lg	8
10	W-867	Hex Bolt - 3/8 x 3/4 Lg	2
11	N40735	Washer Seal	6
	N16170	Clear Silicon 305ml - used to assemble 11 to 4	As Req

Distribution
Divider Head - 1 Outlets

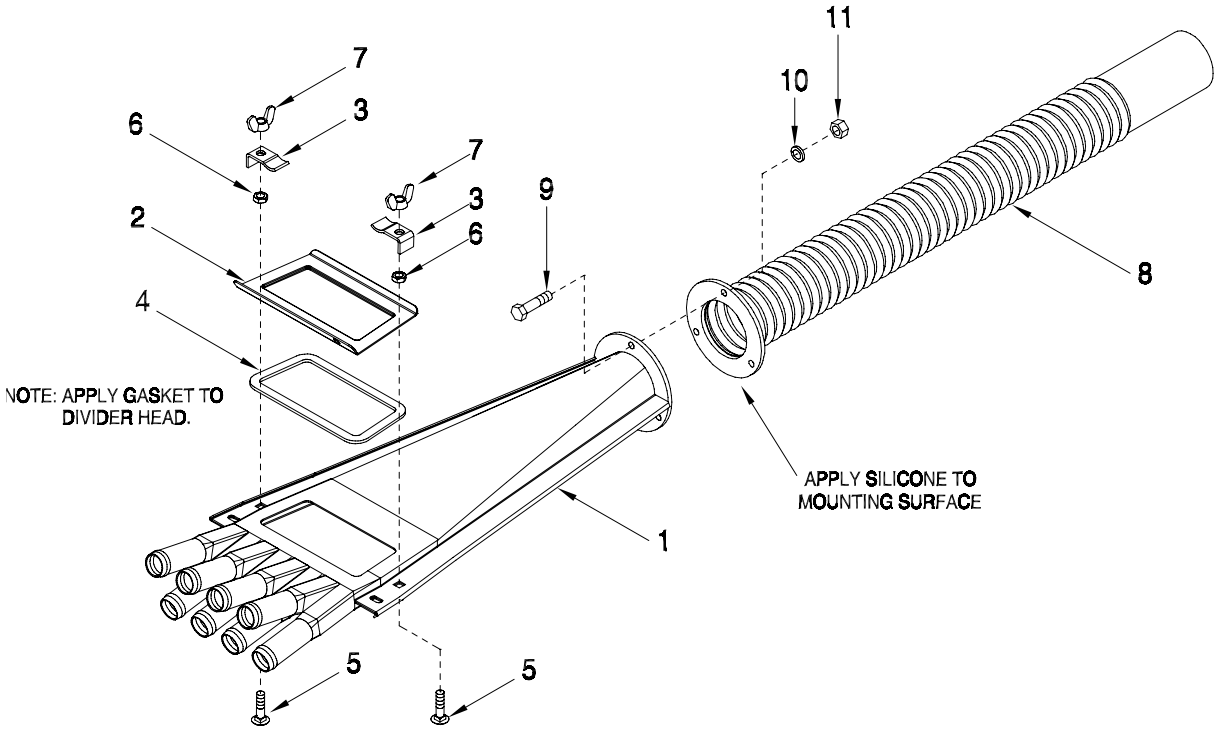

| Head Size | Number of Secondary Outlets | | |

Distribution - Divider Head - 1 Outlets

		SEVEN OUTLET DIVIDER HEAD	
1	N31177	Divider Head - 7 Outlet	1
2	N31160	Access Door - 7 Outlet	1
3	N31165	Clip	2
4	N31171	Gasket - 7 Outlet	1
5	N31012	Carriage Bolt - 5/16 x 1 1/4	2
6	N31014	Hex Jam Nut - 5/16	2
7	N31016	Wing Nut - 5/16	2
	N31187	7 Outlet Divider Head Assembly (Includes All Above Items)	
		EIGHT OUTLET DIVIDER HEAD	
1	N31178	Divider Head - 8 Outlet	1
2	N31161	Access Door - 8 Outlet	1
3	N31165	Clip	2
4	N31172	Gasket - 8 Outlet	1
5	N31012	Carriage Bolt - 5/16 x 1 1/4	2
6	N31014	Hex Jam Nut - 5/16	2
7	N31016	Wing Nut - 5/16	2
	N31188	8 Outlet Divider Head Assembly (Includes All Above Items)	
		NINE OUTLET DIVIDER HEAD	
1	N31179	Divider Head - 9 Outlet	1
2	N31162	Access Door - 9 Outlet	1
3	N31165	Clip	2
4	N31173	Gasket - 9 Outlet	1
5	N31012	Carriage Bolt - 5/16 x 1 1/4	2
6	N31014	Hex Jam Nut - 5/16	2
7	N31016	Wing Nut - 5/16	2
	N31189	9 Outlet Divider Head Assembly (Includes All Above Items)	
		TEN OUTLET DIVIDER HEAD	
1	N31180	Divider Head - 10 Outlet	1
2	N31163	Access Door - 10 Outlet	1
3	N31165	Clip	2
4	N31174	Gasket - 10 Outlet	1
5	N31012	Carriage Bolt - 5/16 x 1 1/4	2
6	N31014	Hex Jam Nut - 5/16	2
7	N31016	Wing Nut - 5/16	2
	N31190	10 Outlet Divider Head Assembly (Includes All Above Items)	
		ELEVEN OUTLET DIVIDER HEAD	
1	N36972	Divider Head - 11 Outlet	1
2	N31163	Access Door - 10 Outlet	1
3	N40545	Clip - Access Door - 11	2
4	N31174	Gasket - 10 Outlet	1
5	N31012	Carriage Bolt - 5/16 x 1 1/4	2
6	N31014	Hex Jam Nut - 5/16	2
7	N31016	Wing Nut - 5/16	2
	N42274	11 Outlet Divider Head Assembly (Includes All Above Items)	
		CORRUGATED DIFFUSER PIPE	
8	N15135	Pipe - Corr Diff - Divider Head	1
9	W-469	Hex Bolt - 1/4 x 3/4	3
10	W-521	Lock Washer - 1/4	3
11	W-512	Hex Nut - 1/4	3

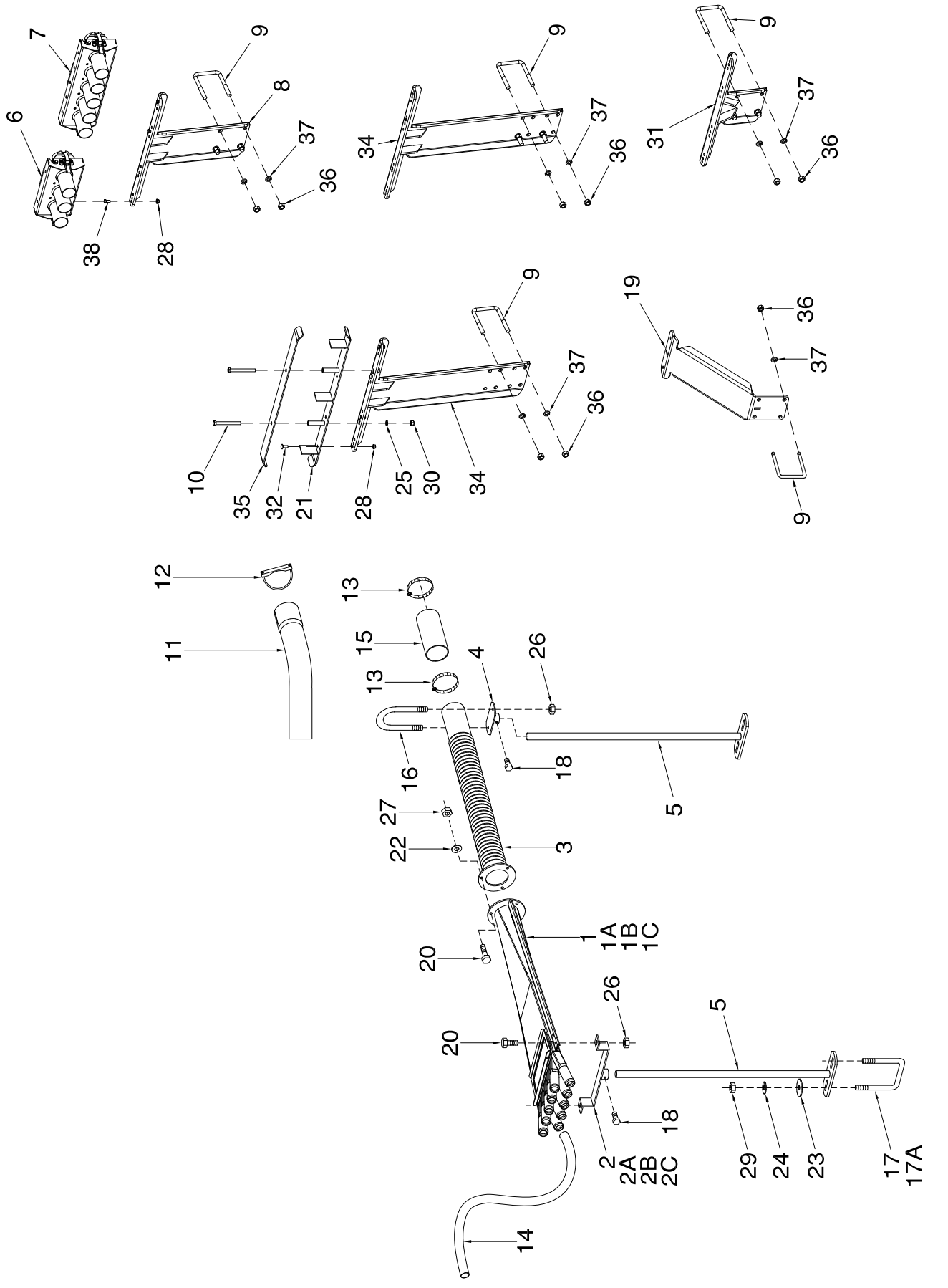
7
6
9
8
37
36
38
28
9
34
37
36
9
31
37
36
9
10
35
32
21
28
25
30
34
37
36
19
36
37
9
12
11
13
15
13
4
26
16
18
5
27
22
3
1
1A
1B
1C
20
20
26
5
18
2
2A
2B
2C
29
24
23
17
17A
14

Distribution - Single Shoot - 1 Outlets

Item	Part No.	Description	No. Used — Number of Primaries						
			3	4	5	6	7	8	9
1	N42274	Divider Assembly - 11 Outlet	As req	As req	As req	As req	As req	As req	As req
1A	N31190	Divider Assembly - 10 Outlet	As req	As req	As req	As req	As req	As req	As req
1B	N31189	Divider Assembly - 9 Outlet	As req	As req	As req	As req	As req	As req	As req
1C	N31188	Divider Assembly - 8 Outlet	As req	As req	As req	As req	As req	As req	As req
1D	N31187	Divider Assembly - 7 Outlet	As req	As req	As req	As req	As req	As req	As req
2	N40544	Support - 11 Outlet	As req	As req	As req	As req	As req	As req	As req
2A	N19406	Support - 10 Outlet	As req	As req	As req	As req	As req	As req	As req
2B	N15595	Support - 9 Outlet	As req	As req	As req	As req	As req	As req	As req
2C	N15107	Support - 8 Outlet	As req	As req	As req	As req	As req	As req	As req
2D	N15594	Support - 7 Outlet	As req	As req	As req	As req	As req	As req	As req
3	N15135	Pipe - Corr Diff - Divider Head	3	4	5	6	7	8	9
4	N15102	Support - Rear	3	4	5	6	7	8	9
5	N19531	Support - Bottom - Rod 24	6	8	10	12	14	16	18
6	* * * * * *	Quick Coupler 3 Run (Refer Pg 10-26)	1	0	0	2	0	0	0
7	* * * * * *	Quick Coupler 5 Run (Refer Pg 10-27)	0	1	1	0	2	2	2
8	N51962	Coupler Tower - Short	1	1	2	2	2	2	3
9	C-219	U-Bolt - 5/8 x 4 x 5 9/16 Lg	4	4	4	4	4	4	4
10	C-3684	Hex Bolt - 1/2 x 4 1/2 Lg	2	2	2	2	2	2	2
11	N27329	Tube - Primary - 45 degree Elbow	0	2	2	4	4	4	4
12	N15022	Clamp - Muffler - 2 1/2 Dia	0	2	2	4	4	4	4
13	N11905	Hose Clamp - 2 1/2	6	8	10	12	14	16	18
14	R480034	Hose - 0.929 ID x 1.169 OD/ft (75 ft roll)	225 ft	300 ft	375 ft	450 ft	525 ft	600 ft	675 ft
15	R480055	Hose - 2 1/2 ID/ft Goodyear (100 ft rolls)	25 ft	50 ft	50 ft	75 ft	75 ft	100 ft	125 ft
16	N15096	U-Bolt - 1/4 x 2 9/16 x 3 1/4 LG	3	4	5	6	7	8	9
17	N15098	U-Bolt - 3/8 x 4 x 5	8	10	12	14	16	18	20
17A	N15097	U-Bolt - 3/8 x 2 x 5	6	8	10	12	14	16	18
18	N24396	Setscrew - 1/4 x 1/2	6	8	10	12	14	16	18
19	N56737	Coupler Tower - Behind (Maxim II and Concept)	1	1	1	2	2	2	2
20	W-469	Hex Bolt - 1/4 x 3/4 Lg	15	20	25	30	35	40	45
21	N51979	Hose Clamp Strap	1	1	1	1	1	1	1
22	W-521	Lockwasher - 1/4	9	12	15	18	21	24	27
23	D-5579	Flatwasher - 3/8	12	16	20	24	28	32	36
24	W-523	Lockwasher - 3/8	12	16	20	24	28	32	36
25	W-525	Lockwasher - 1/2	2	2	2	2	2	2	2
26	D-5277	Serrated Locknut - 1/4	12	16	20	24	28	32	36
27	W-512	Hex Nut - 1/4	9	12	15	18	21	24	27
28	D-5279	Serrated Locknut - 3/8	4	4	4	6	6	6	6
29	W-514	Hex Nut - 3/8	12	16	20	24	28	32	36
30	W-516	Hex Nut - 1/2	2	2	2	2	2	2	2
31	N53203	Coupler Tower - Behind	1	1	1	1	1	1	1
32	P7C616	Carriage Bolt - 3/8 x 1	2	2	2	2	2	2	2
33	N37920	Equalizer - used on Contour 61-86ft - Not Shown							
34	N51967	Coupler Tower - Tall	2	2	2	2	2	2	2
35	N51977	Clamp Plate	1	1	1	1	1	1	1
36	W-517	Hex Nut - 5/8	8	8	8	8	8	8	8
37	W-526	Lockwasher - 5/8	8	8	8	8	8	8	8
38	W-475	Hex Bolt - 3/8 x 1 Lg	2	2	2	4	4	4	4

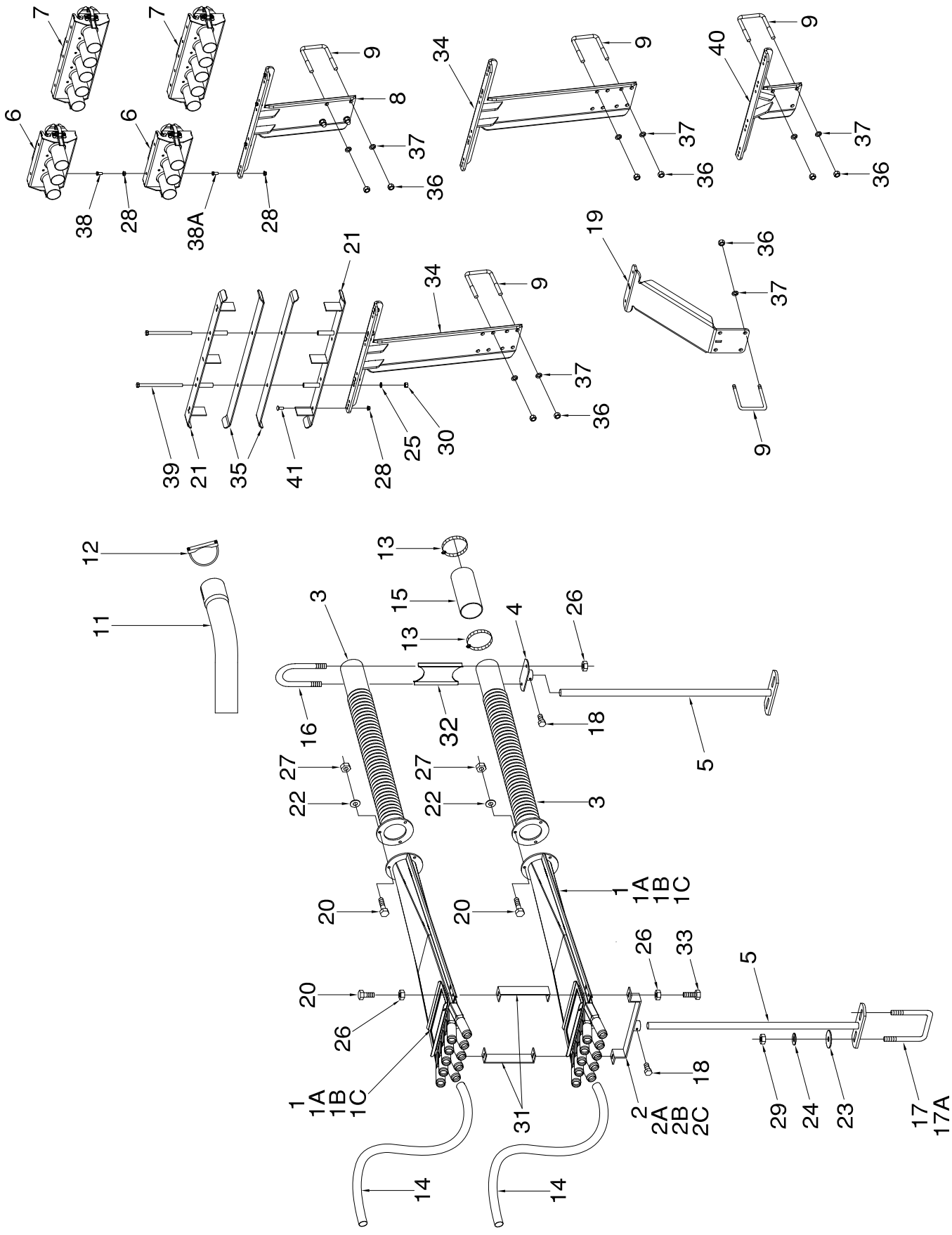
7
6
38
28
38A
28
8
9
37
36
34
40
21
39
35
41
25
30
19
12
11
13
15
3
4
26
16
32
18
5
27
22
20
1
1A
1B
1C
33
31
2
2A
2B
2C
29
24
23
17
17A
14

Distribution - Double Shoot - 1 Outlets

Item	Part No.	Description	No. Used — Number of Primaries						
			3	4	5	6	7	8	9
1	N42274	Divider Assembly - 11 Outlet	As req	As req	As req	As req	As req	As req	As req
1A	N31190	Divider Assembly - 10 Outlet	As req	As req	As req	As req	As req	As req	As req
1B	N31189	Divider Assembly - 9 Outlet	As req	As req	As req	As req	As req	As req	As req
1C	N31188	Divider Assembly - 8 Outlet	As req	As req	As req	As req	As req	As req	As req
1D	N31187	Divider Assembly - 7 Outlet	As req	As req	As req	As req	As req	As req	As req
2	N40544	Support - 11 Outlet	As req	As req	As req	As req	As req	As req	As req
2A	N19406	Support - 10 Outlet	As req	As req	As req	As req	As req	As req	As req
2B	N15595	Support - 9 Outlet	As req	As req	As req	As req	As req	As req	As req
2C	N15107	Support - 8 Outlet	As req	As req	As req	As req	As req	As req	As req
2D	N15594	Support - 7 Outlet	As req	As req	As req	As req	As req	As req	As req
3	N15135	Pipe - Corr Diff - Divider Head	6	8	10	12	14	16	18
4	N15102	Support - Rear	3	4	5	6	7	8	9
5	N19531	Support - Bottom - Rod 24	6	8	10	12	14	16	18
6	* * * * * *	Quick Coupler 3 Run (Refer Pg 10-26)	2	0	0	4	0	0	0
7	* * * * * *	Quick Coupler 5 Run (Refer Pg 10-27)	0	2	2	0	4	4	4
8	N51962	Coupler Tower - Short	1	1	2	2	2	2	3
9	C-219	U-Bolt - 5/8 x 4 x 5 9/16	4	4	4	4	4	4	4
11	N27329	Tube - Primary - 45 degree Elbow	0	4	4	8	8	8	8
12	N15022	Clamp - Muffler - 2 1/2 Dia	0	4	4	8	8	8	8
13	N11905	Hose Clamp - 2 1/2	12	16	20	24	28	32	36
14	R480034	Hose - 0.929 ID x 1.169 OD/ft (75 ft roll)	450 ft	600 ft	750 ft	900 ft	1050 ft	1200ft	1350ft
15	R480055	Hose - 2 1/2 ID/ft Goodyear (100 ft rolls)	50 ft	75 ft	100 ft	125 ft	150 ft	175 ft	200ft
16	N16504	U-Bolt - 1/4 x 2 9/16 x 9 1/2 Lg	3	4	5	6	7	8	9
17	N15098	U-Bolt - 3/8 x 4 x 5	8	10	12	14	16	18	20
17A	N15097	U-Bolt - 3/8 x 2 x 5	6	8	10	12	14	16	18
18	N24396	Setscrew - 1/4 x 1/2	6	8	10	12	14	16	18
19	N56737	Coupler Tower - Behind (Maxim II and Concept)	1	1	1	2	2	2	2
20	W-469	Hex Bolt - 1/4 x 3/4 Lg	24	32	40	48	56	64	72
21	N51979	Hose Clamp Strap	2	2	2	2	2	2	2
22	W-521	Lockwasher - 1/4	18	24	30	36	42	48	54
23	D-5579	Flatwasher - 3/8	12	16	20	24	28	32	36
24	W-523	Lockwasher - 3/8	12	16	20	24	28	32	36
25	W-525	Lockwasher - 1/2	2	2	2	2	2	2	2
26	D-5277	Serrated Locknut - 1/4	18	24	30	36	42	48	54
27	W-512	Hex Nut - 1/4	18	24	30	36	42	48	54
28	D-5279	Serrated Locknut - 3/8	6	6	6	10	10	10	10
29	W-514	Hex Nut - 3/8	12	16	20	24	28	32	36
30	W-516	Hex Nut - 1/2	2	2	2	2	2	2	2
31	N16689	Bracket Front - Dual Shoot Heads	6	8	10	12	14	16	18
32	N16507	Spacer - Rear - Dual Shoot Heads	3	4	5	6	7	8	9
33	W-1552	Hex Bolt - 1/4 X 1 Lg	6	8	10	12	14	16	18
34	N51967	Coupler Tower - Tall	2	2	2	2	2	2	2
35	N51977	Clamp Plate	1	1	1	1	1	1	1
36	W-517	Hex Nut - 5/8	8	8	8	8	8	8	8
37	W-526	Lockwasher - 5/8	8	8	8	8	8	8	8
38	W-867	Hex Bolt - 3/8 x 3/4 Lg	2	2	2	4	4	4	4
38A	**W-475**	**Hex Bolt - 3/8 x 1 Lg**	**2**	**2**	**2**	**4**	**4**	**4**	**4**
39	W-3687	Hex Bolt - 1/2 x 8 Lg -DOUBLE SHOOT	2	2	2	2	2	2	2
40	N53203	Coupler Tower - Behind	1	1	1	1	1	1	1
41	P7C616	Carriage Bolt - 3/8 x 1 Lg	8	8	8	8	8	8	8
	N37920	Equalizer - used on Contour 61-86ft - Not Shown							

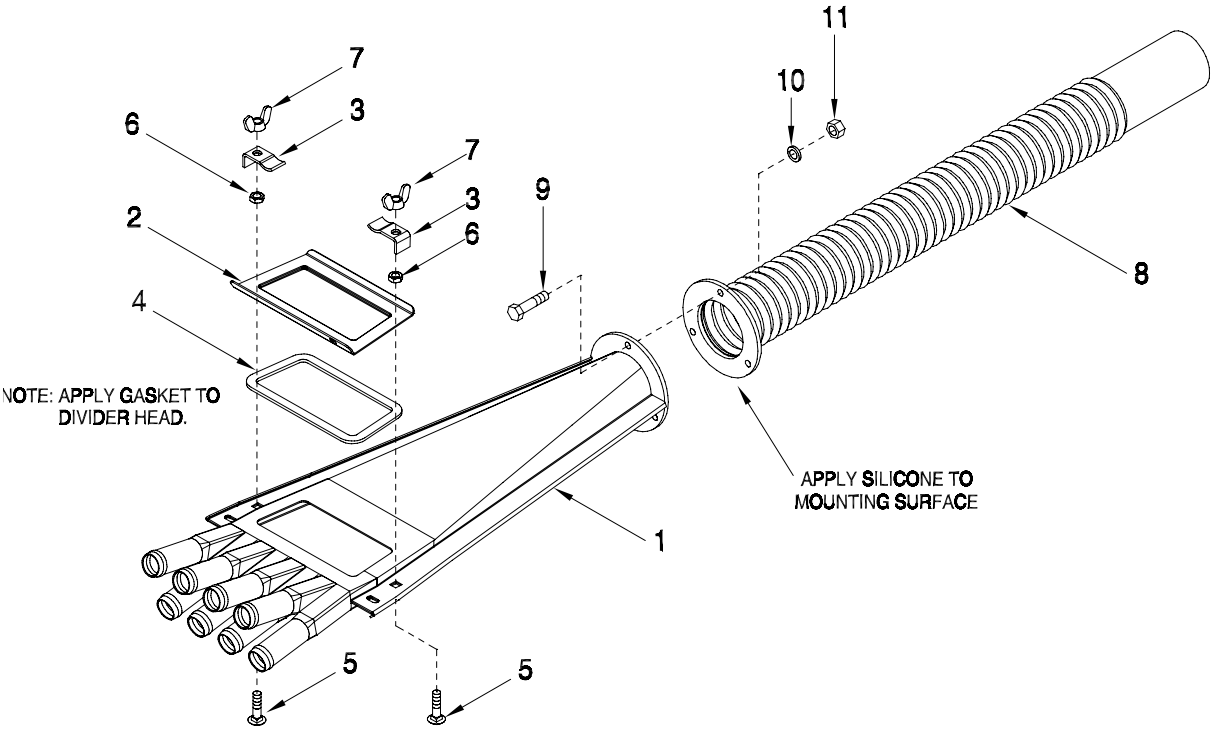

| Head Size | Number of Secondary Outlets | | |

Distribution - Divider Head - 1 1/8 Outlets

		SIX OUTLET DIVIDER HEAD	
1	N36967	Divider Head - 6 Outlet	1
2	N31160	Access Door - 7 Outlet	1
3	N31165	Clip	2
4	N31171	Gasket - 7 Outlet	1
5	N31012	Carriage Bolt - 5/16 x 1 1/4	2
6	N31014	Hex Jam Nut - 5/16	2
7	N31016	Wing Nut - 5/16	2
	N42253	6 Outlet Divider Head Assembly (Includes All Above Items)	
		SEVEN OUTLET DIVIDER HEAD	
1	N36966	Divider Head - 7 Outlet	1
2	N31161	Access Door - 8 Outlet	1
3	N31165	Clip	2
4	N31172	Gasket - 8 Outlet	1
5	N31012	Carriage Bolt - 5/16 x 1 1/4	2
6	N31014	Hex Jam Nut - 5/16	2
7	N31016	Wing Nut - 5/16	2
	N42254	7 Outlet Divider Head Assembly (Includes All Above Items)	
		EIGHT OUTLET DIVIDER HEAD	
1	N36965	Divider Head - 8 Outlet	1
2	N31162	Access Door - 9 Outlet	1
3	N31165	Clip	2
4	N31173	Gasket - 9 Outlet	1
5	N31012	Carriage Bolt - 5/16 x 1 1/4	2
6	N31014	Hex Jam Nut - 5/16	2
7	N31016	Wing Nut - 5/16	2
	N42255	8 Outlet Divider Head Assembly (Includes All Above Items)	
		NINE OUTLET DIVIDER HEAD	
1	N36964	Divider Head - 9 Outlet	1
2	N31163	Access Door - 10 Outlet	1
3	N31165	Clip	2
4	N31174	Gasket - 10 Outlet	1
5	N31012	Carriage Bolt - 5/16 x 1 1/4	2
6	N31014	Hex Jam Nut - 5/16	2
7	N31016	Wing Nut - 5/16	2
	N42256	9 Outlet Divider Head Assembly (Includes All Above Items)	
		TEN OUTLET DIVIDER HEAD	
1	N42067	Divider Head - 10 Outlet	1
2	N31163	Access Door - 10 Outlet	1
3	N40545	Clip - Access Door	2
4	N31174	Gasket - 10 Outlet	1
5	N31012	Carriage Bolt - 5/16 x 1 1/4	2
6	N31014	Hex Jam Nut - 5/16	2
7	N31016	Wing Nut - 5/16	2
	N42257	10 Outlet Divider Head Assembly (Includes All Above Items)	
		CORRUGATED DIFFUSER PIPE	
8	N15135	Pipe - Corr Diff - Divider Head	1
9	W-469	Hex Bolt - 1/4 x 3/4	3
10	W-521	Lock Washer - 1/4	3
11	W-512	Hex Nut - 1/4	3

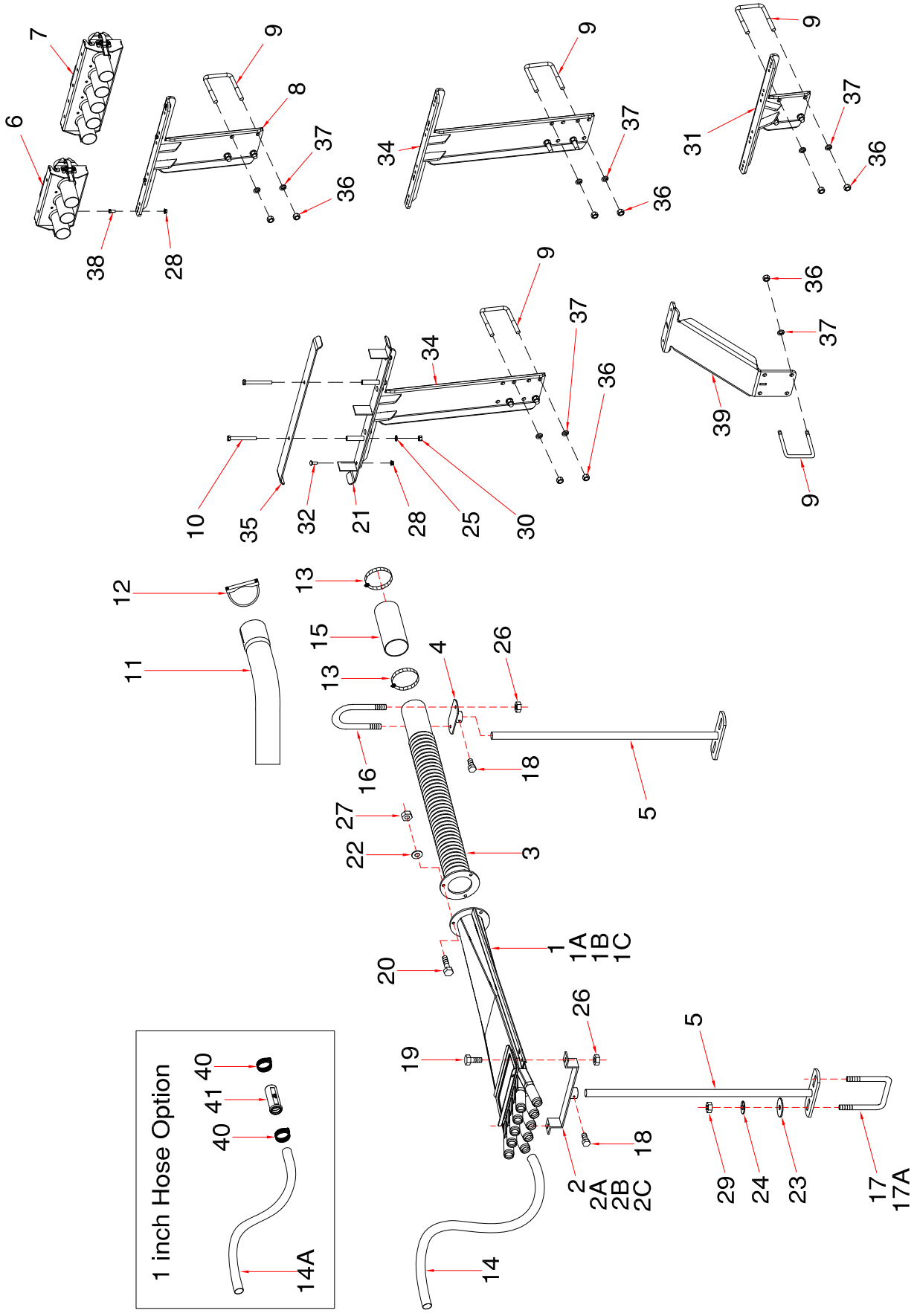
1 inch Hose Option
40
41
40
14A

Distribution - Single Shoot - 1 1/8 Outlet

Item	Part No.	Description	No. Used - Number of Primaries						
			3	4	5	6	7	8	9
1	N48927	Divider Assembly - 11 Outlet - 1 1/8 ID	As req	As req	As req	As req	As req	As req	As req
1A	N42257	Divider Assembly - 10 Outlet - 1 1/8 ID	As req	As req	As req	As req	As req	As req	As req
1B	N42256	Divider Assembly - 9 Outlet - 1 1/8 ID	As req	As req	As req	As req	As req	As req	As req
1C	N42255	Divider Assembly - 8 Outlet - 1 1/8 ID	As req	As req	As req	As req	As req	As req	As req
1D	N42254	Divider Assembly - 7 Outlet - 1 1/8 ID	As req	As req	As req	As req	As req	As req	As req
1E	N42253	Divider Assembly - 6 Outlet - 1 1/8 ID	As req	As req	As req	As req	As req	As req	As req
2	N42245	Support - 11 Outlet	As req	As req	As req	As req	As req	As req	As req
2A	N42244	Support - 10 Outlet	As req	As req	As req	As req	As req	As req	As req
2B	N42243	Support - 9 Outlet	As req	As req	As req	As req	As req	As req	As req
2C	N42242	Support - 8 Outlet	As req	As req	As req	As req	As req	As req	As req
2D	N42227	Support - 7 Outlet	As req	As req	As req	As req	As req	As req	As req
2E	N42241	Support - 6 Outlet	As req	As req	As req	As req	As req	As req	As req
3	N15135	Pipe - Corr Diff - Divider Head	3	4	5	6	7	8	9
4	N40995	Support - Rear	3	4	5	6	7	8	9
5	N19531	Support - Bottom - Rod 24	6	8	10	12	14	16	18
6	* * * * * *	Quick Coupler 3 Run (Refer Pg 10-26)	1	0	0	2	0	0	0
7	* * * * * *	Quick Coupler 5 Run (Refer Pg 10-27)	0	1	1	0	2	2	2
8	N51962	Coupler Tower - Short	1	1	2	2	2	2	3
9	C-219	U-Bolt - 5/8 x 4 x 5 9/16	4	4	4	4	4	4	4
10	C-3684	Hex Bolt - 1/2 x 4 1/2 Lg	2	2	2	2	2	2	2
11	N27329	Tube - Primary - 45 degree Elbow	0	2	2	4	4	4	4
12	N15022	Clamp - Muffler - 2 1/2 Dia	0	2	2	4	4	4	4
13	N11905	Hose Clamp - 2 1/2	6	8	10	12	14	16	18
14	R4800681	Hose - 1.105 ID x 1.385 OD/ft (75 ft roll)	225 ft	300 ft	375 ft	450 ft	525 ft	600 ft	675 ft
14A	R480034	Hose - 0.929 ID x 1.169 OD/ft (75 ft roll)							
15	R480055	Hose - 2 1/2 ID/ft Goodyear (100 ft rolls)	25 ft	50 ft	50 ft	75 ft	75 ft	100 ft	125 ft
16	N15096	U-Bolt - 1/4 x 2 9/16 x 3 1/4 LG	3	4	5	6	7	8	9
17	N15098	U-Bolt - 3/8 x 4 x 5	8	10	12	14	16	18	20
17A	N15097	U-Bolt - 3/8 x 2 x 5	6	8	10	12	14	16	18
18	N24396	Setscrew - 1/4 x 1/2	6	8	10	12	14	16	18
19	W-469	Hex Bolt - 1/4 x 3/4 Lg	6	8	10	12	14	16	18
20	W-469	Hex Bolt - 1/4 x 3/4 Lg	9	12	15	18	21	24	27
21	N51979	Hose Clamp Strap	1	1	1	1	1	1	1
22	W-521	Lockwasher - 1/4	9	12	15	18	21	24	27
23	D-5579	Flatwasher - 3/8	12	16	20	24	28	32	36
24	W-523	Lockwasher - 3/8	12	16	20	24	28	32	36
25	W-525	Lockwasher - 1/2	2	2	2	2	2	2	2
26	D-5277	Serrated Locknut - 1/4	12	16	20	24	28	32	36
27	W-512	Hex Nut - 1/4	9	12	15	18	21	24	27
28	D-5279	Serrated Locknut - 3/8	4	4	4	6	6	6	6
29	W-514	Hex Nut - 3/8	12	16	20	24	28	32	36
30	W-516	Hex Nut - 1/2	4	4	4	4	4	4	4
31	N53203	Coupler Tower - Behind	1	1	1	1	1	1	1
32	P7C616	Carriage Bolt - 3/8 x 1	2	2	2	2	2	2	2
33	N45690	Granular Deflector - 1 1/8 Outlet (Not Shown)							
34	N51967	Coupler Tower - Tall	2	2	2	2	2	2	2
35	N51977	Clamp Plate	1	1	1	1	1	1	1
36	W-517	Hex Nut - 5/8	8	8	8	8	8	8	8
37	W-526	Lockwasher - 5/8	8	8	8	8	8	8	8
38	W-475	Hex Bolt - 3/8 x 1 Lg	2	2	2	4	4	4	4
39	N56737	Coupler Tower - Behind (Maxim II and Concept)	1	1	1	2	2	2	2
40	N11470	Hose Clamp - 1 - HC5-20	As req	As req	As req	As req	As req	As req	As req
41	N62351	Secondary Hose Adaptor (Used with item 14A)	As req	As req	As req	As req	As req	As req	As req

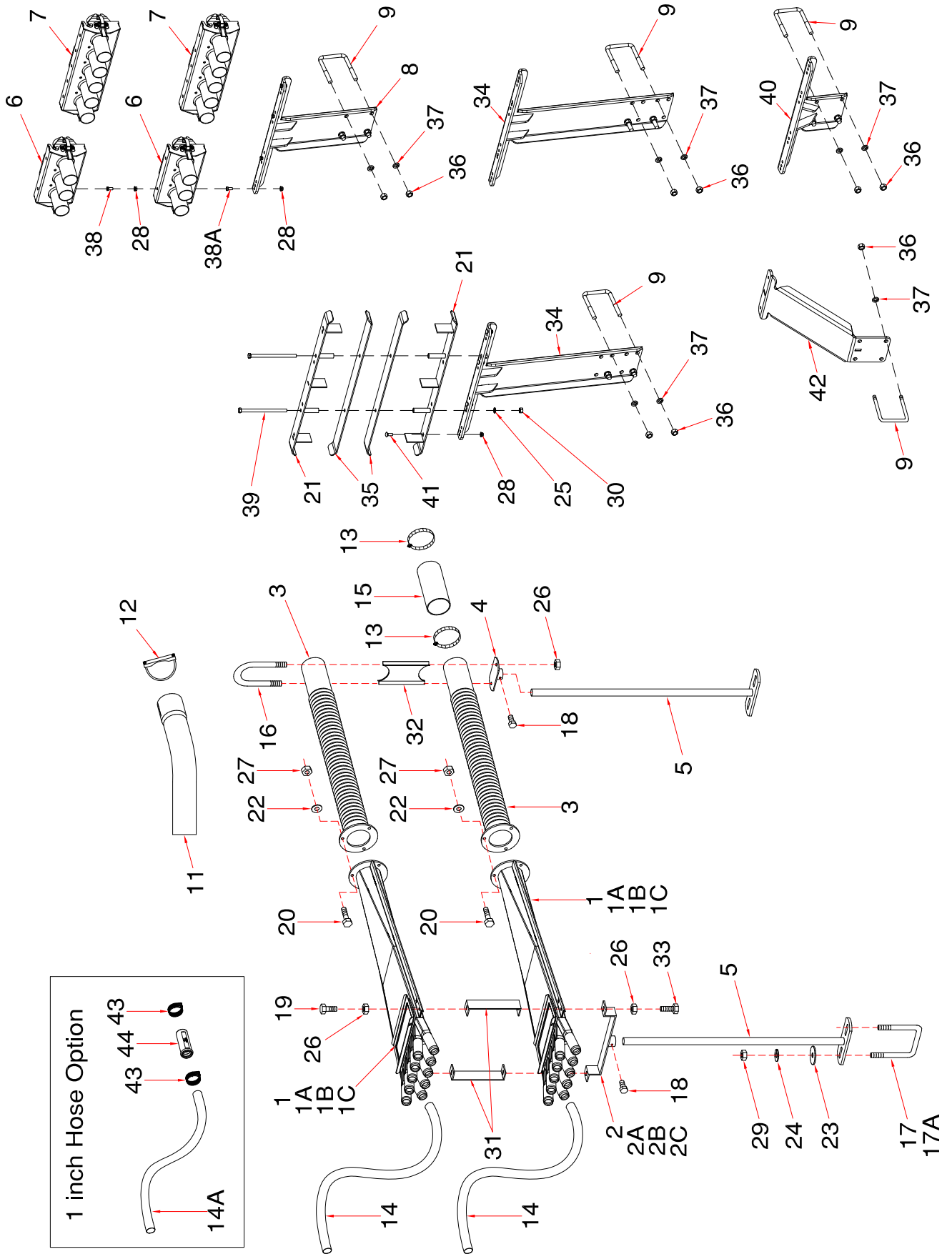
1 inch Hose Option
43
44
43
14A

Distribution - Double Shoot - 1 1/8 Outlet

Item	Part No.	Description	No. Used - Number of Primaries 3	4	5	6	7	8	9
1	N48927	Divider Assembly - 11 Outlet - 1 1/8 ID	As req	As req	As req	As req	As req	As req	As req
1A	N42257	Divider Assembly - 10 Outlet - 1 1/8 ID	As req	As req	As req	As req	As req	As req	As req
1B	N42256	Divider Assembly - 9 Outlet - 1 1/8 ID	As req	As req	As req	As req	As req	As req	As req
1C	N42255	Divider Assembly - 8 Outlet - 1 1/8 ID	As req	As req	As req	As req	As req	As req	As req
1D	N42254	Divider Assembly - 7 Outlet - 1 1/8 ID	As req	As req	As req	As req	As req	As req	As req
1E	N42253	Divider Assembly - 6 Outlet - 1 1/8 ID	As req	As req	As req	As req	As req	As req	As req
2	N42245	Support - 11 Outlet	As req	As req	As req	As req	As req	As req	As req
2A	N42244	Support - 10 Outlet	As req	As req	As req	As req	As req	As req	As req
2B	N42243	Support - 9 Outlet	As req	As req	As req	As req	As req	As req	As req
2C	N42242	Support - 8 Outlet	As req	As req	As req	As req	As req	As req	As req
2D	N42227	Support - 7 Outlet	As req	As req	As req	As req	As req	As req	As req
2E	N42241	Support - 6 Outlet	As req	As req	As req	As req	As req	As req	As req
3	N15135	Pipe - Corr Diff - Divider Head	6	8	10	12	14	16	18
4	N40995	Support - Rear	3	4	5	6	7	8	9
5	N19531	Support - Bottom - Rod 24	6	8	10	12	14	16	18
6	* * * * * *	Quick Coupler 3 Run (Refer Pg 10-26)	2	0	0	4	0	0	0
7	* * * * * *	Quick Coupler 5 Run (Refer Pg 10-27)	0	2	2	0	4	4	4
8	N51962	Coupler Tower - Short	1	1	2	2	2	2	3
9	C-219	U-Bolt - 5/8 x 4 x 5 9/16	4	4	4	4	4	4	4
10	N45690	Granular Deflector - 1 1/8 Outlet (Not Shown)							
11	N27329	Tube - Primary - 45 degree Elbow	0	4	4	8	8	8	8
12	N15022	Clamp - Muffler - 2 1/2 Dia	0	4	4	8	8	8	8
13	N11905	Hose Clamp - 2 1/2	12	16	20	24	28	32	36
14	R4800681	Hose - 1.105 ID x 1.385 OD/ft (75 ft roll)	450 ft	600 ft	750 ft	900 ft	1050 ft	1200ft	1350ft
14A	R480034	Hose - 0.929 ID x 1.169 OD/ft (75 ft roll)							
15	R480055	Hose - 2 1/2 ID/ft Goodyear (100 ft rolls)	50 ft	75 ft	100 ft	125 ft	150 ft	175 ft	200ft
16	N16504	U-Bolt - 1/4 x 2 9/16 x 9 1/2 Lg	3	4	5	6	7	8	9
17	N15098	U-Bolt - 3/8 x 4 x 5	8	10	12	14	16	18	20
17A	N15097	U-Bolt - 3/8 x 2 x 5	6	8	10	12	14	16	18
18	N24396	Setscrew - 1/4 x 1/2	6	8	10	12	14	16	18
19	W-469	Hex Bolt - 1/4 x 3/4 Lg	6	8	10	12	14	16	18
20	W-469	Hex Bolt - 1/4 x 3/4 Lg	18	24	30	36	42	48	54
21	N51979	Hose Clamp Strap	2	2	2	2	2	2	2
22	W-521	Lockwasher - 1/4	18	24	30	36	42	48	54
23	D-5579	Flatwasher - 3/8	12	16	20	24	28	32	36
24	W-523	Lockwasher - 3/8	12	16	20	24	28	32	36
25	W-525	Lockwasher - 1/2	2	2	2	2	2	2	2
26	D-5277	Serrated Locknut - 1/4	12	16	20	24	28	32	36
27	W-512	Hex Nut - 1/4	18	24	30	36	42	48	54
28	D-5279	Serrated Locknut - 3/8	6	6	6	10	10	10	10
29	W-514	Hex Nut - 3/8	12	16	20	24	28	32	36
30	W-516	Hex Nut - 1/2	2	2	2	2	2	2	2
31	N16689	Bracket Front - Dual Shoot Heads	6	8	10	12	14	16	18
32	N16507	Spacer - Rear - Dual Shoot Heads	3	4	5	6	7	8	9
33	W-1552	Hex Bolt - 1/4 x 1 Lg	6	8	10	12	14	16	18
34	N51967	Coupler Tower - Tall	2	2	2	2	2	2	2
35	N51977	Clamp Plate	1	1	1	1	1	1	1
36	W-517	Hex Nut - 5/8	8	8	8	8	8	8	8
37	W-526	Lockwasher - 5/8	8	8	8	8	8	8	8
38	W-867	Hex Bolt - 3/8 x 3/4 Lg	2	2	2	2	2	2	2
38A	**W-475**	**Hex Bolt - 3/8 x 1 Lg**	**2**	**2**	**2**	**2**	**2**	**2**	**2**
39	W-3687	Hex Bolt - 1/2 8 x Lg -DOUBLE SHOOT	2	2	2	2	2	2	2
40	N53203	Coupler Tower - Behind	1	1	1	1	1	1	1
41	P7C616	Carriage Bolt - 3/8 x 1	8	8	8	8	8	8	8
42	N56737	Coupler Tower - Behind (Maxim II and Concept)	1	1	1	2	2	2	2
43	N11470	Hose Clamp - 1 - HC5-20	As req	As req	As req	As req	As req	As req	As req
44	N62351	Secondary Hose Adaptor (Used with item 14A)	As req	As req	As req	As req	As req	As req	As req

Metering & Distribution
Deflectors Assembly

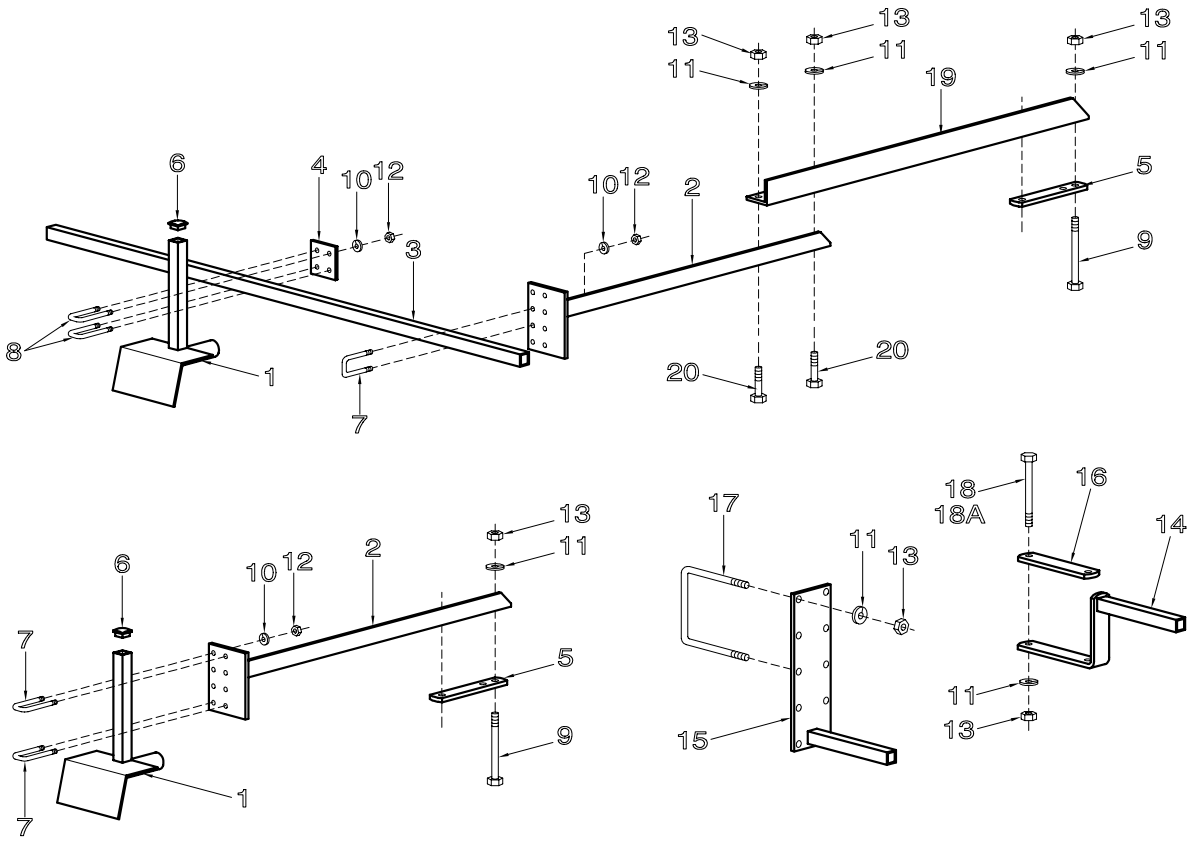

Item	Part No.	Description	Qty
1	N19770	Deflector - 1” outlet heads	AsReq
	N45690	Deflector - 1 1/8” outlet heads	AsReq
2	N19769	Bracket - Deflector	AsReq
3	N21080	Bar Support - 3/4 Sq x 176 Lg	AsReq
4	N21060	Clamp - Plate	AsReq
5	N22822	Strap - Clamp	AsReq
6	N21057	Square Insert Glide	AsReq
7	N21055	U-Bolt - 1/4 x 3/4 x 1 3/8	AsReq
8	N21061	U-Bolt - 1/4 x 3/4 x 2	AsReq
9	C-3918	Hex Bolt - 3/8 x 5 Lg	As Req
10	W-521	Lockwasher - 1/4	As Req
11	W-523	Lockwasher - 3/8	As Req
12	W-512	Hex Nut - 1/4	As Req
13	W-514	Hex Nut - 3/8	As Req
14	N24309	Deflector Mount (25’-35’ & 31’-41’ 9000 cultivator)	2
15	N24308	Deflector Mount (43’-47’ & 49’-59’ 9000 cultivator)	2
16	N24311	Clamp Strap (25’-35’ & 31’-41’ 9000 cultivator)	2
17	N15098	U-Bolt - 3/8 x 4 x 5 (43’-47’ & 49’-59’ 9000 cultivator)	4
18	C-3918	Hex Bolt - 3/8 x 5 Lg (4x4 Hitch)	4
18A	N19678	Hex Bolt - 3/8 x 7 Lg (4x6 Hitch)	4
19	N25773	Bracket Deflector Extension	4
20	W-187	Hex Bolt - 3/8 x 1 1/4 Lg	4

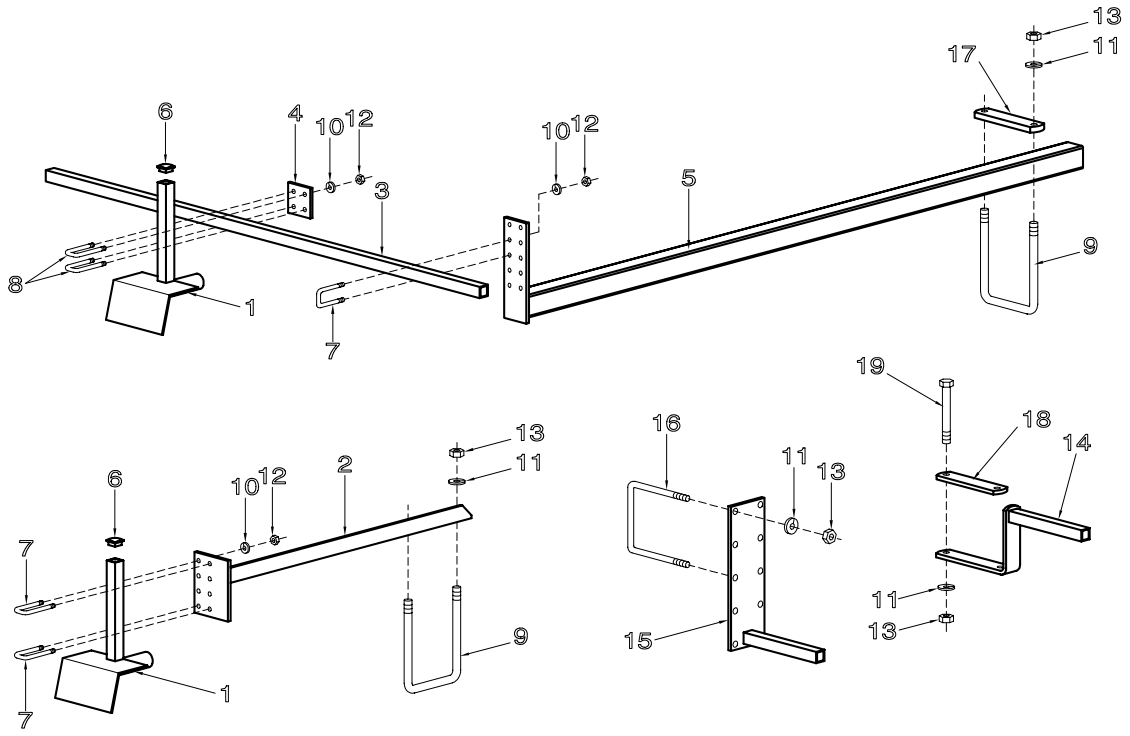

Item	Part No.	Description	Qty
1	N19770	Deflector - 1” outlet heads	As Req
	N45690	Deflector - 1 1/8” outlet heads	As Req
2	N19769	Bracket - Deflector	As Req
3	N21080	Bar Support - 3/4 Sq x 176 Lg	As Req
4	N21060	Clamp - Plate	As Req
5	N28398	Bracket - Deflector	As Req
6	N21057	Square Insert Glide	As Req
7	N21055	U-Bolt - 1/4 x 3/4 x 1 3/8	As Req
8	N21061	U-Bolt - 1/4 x 3/4 x 2	As Req
9	N19723	U-Bolt - 3/8 x 4 1/16 x 6 15/16	As Req
10	W-521	Lockwasher - 1/4	As Req
11	W-523	Lockwasher - 3/8	As Req
12	W-512	Hex Nut - 1/4	As Req
13	W-514	Hex Nut - 3/8	As Req
14	N28399	Deflector Mount	2
15	N24308	Deflector Mount	2
16	N15098	U-Bolt - 3/8 x 4 x 5	4
17	N28396	Clamp Strap	2
18	N28397	Clamp Strap	4
19	C-3918	Hex Bolt - 3/8 x 5 Lg	4

Distribution
C2 Contour Broadcast

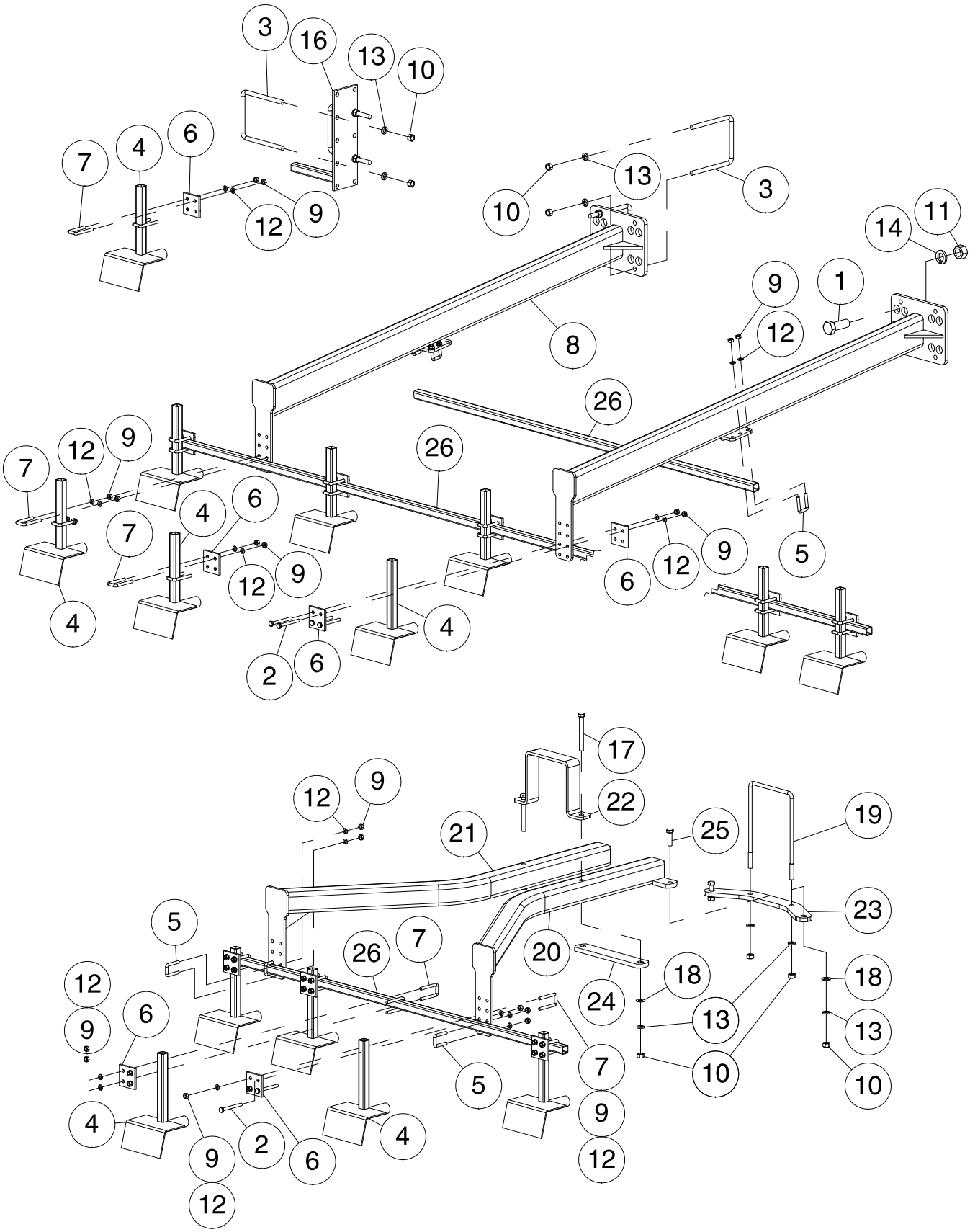

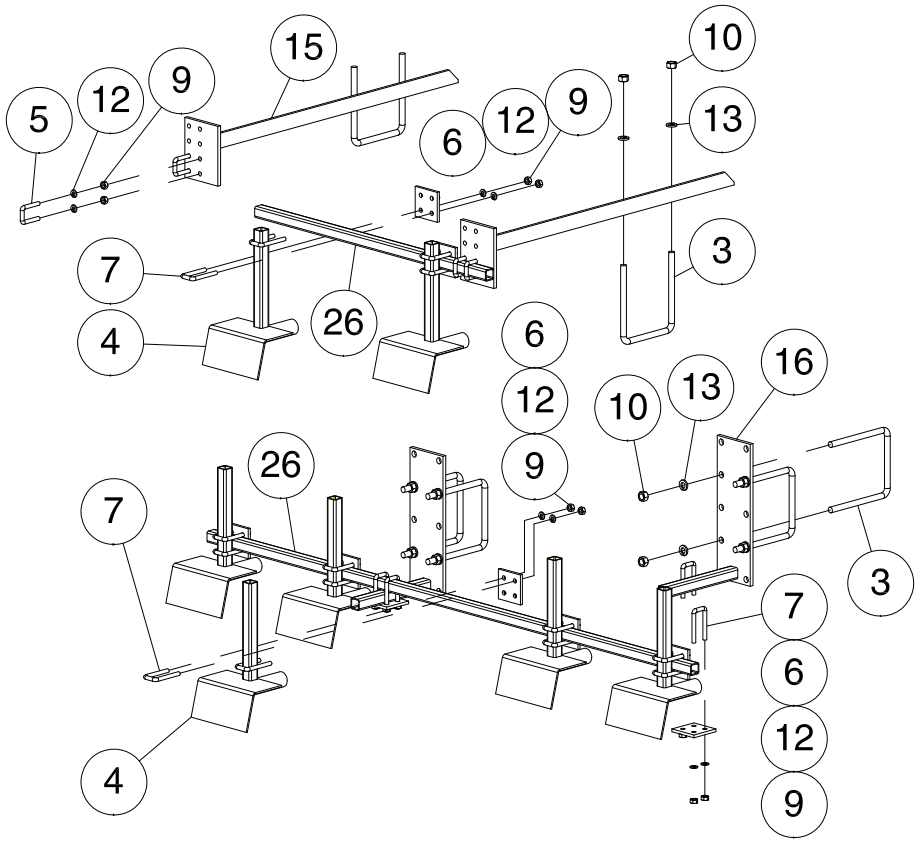

Item	Part No.	Description	Qty
1	C-695	Hex Bolt - 3/4 x 2 Lg	4
2	C15319	Hex Bolt - 1/4 x 2 1/2 Lg	As Req
3	N15098	U-Bolt - 3/8 x 4 x 5 UL	As Req
4	N19770	Deflector - 1” Outlet Heads	As Req
	N45690	Deflector - 1 1/4” Outlet Heads	
5	N21055	U-Bolt - 1/4 x 3/4 x 1 3/8 UL	As Req
6	N21060	Clamp Plate	As Req
7	N21061	U-Bolt - 1/4 x 3/4 x 2	As Req
8	N60330	Deflector Bracket	4
9	W-512	Hex Nut - 1/4	As Req
10	W-514	Hex Nut - 3/8	As Req
11	W-518	Hex Nut - 3/4	4
12	W-521	Lockwasher - 1/4	As Req
13	W-523	Lockwasher - 3/8	As Req
14	W-527	Lockwasher - 3/4	4
15	N19769	Deflector Bracket	As Req
16	N24308	Deflector Mount “B”	As Req
17	D-5249	Hex Bolt - 3/8 x 3 1/4 Lg	As Req
18	D-5489	Washer - 13/32 ID x 13/16 OD x 16 Ga	As Req
19	N34025	U-Bolt - 3/8 x 5 x 8 UL	As Req
20	N45036	Mount Bracket	As Req
21	N45037	Mount Bracket	As Req
22	N45042	Mounting Bracket	As Req
23	N60331	Anchor Strap	As Req
24	N60332	Anchor Strap	As Req
25	W-187	Hex Bolt - 3/8 x 1 1/4 Lg	As Req
26	N21080	Mounting Tube - 3/4 Sq x 176 Lg	As Req

Plenum - Dual Fan
Single Shoot Plenum - 9 Outlet

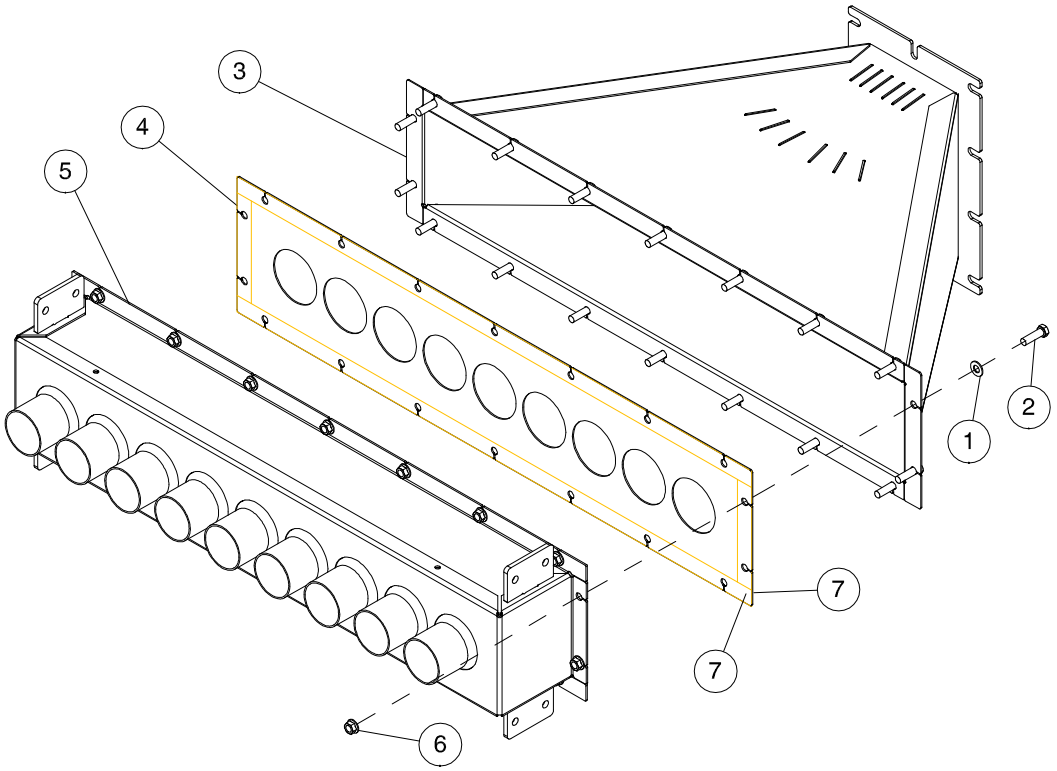

Used only on Dual Fan Assembly

Item	Part No.	Description	Qty
1	D-5489	Washer - 13/32 ID x 13/16 OD x 16 Ga	18
2	W-187	Hex Bolt - 3/8 x 1 1/4 Lg	18
3	N47801	Plenum Body - 9 Outlet	1
4	N47802	Plenum Baffle - 9 Outlet	1
5	N49621	Plenum Front - 9 Outlet	1
6	S27987	Flange Lock Nut - 3/8 W/Center Lock	18
7	N15716	Seal Strip - 1/4 x 1 - Bulk/Foot	14 ft
	N47800	Plenum Assembly - Single Shoot (Includes All Above Items)	

Plenum Assembly - Dual Fan
Single Shoot Plenum - 10 Outlet

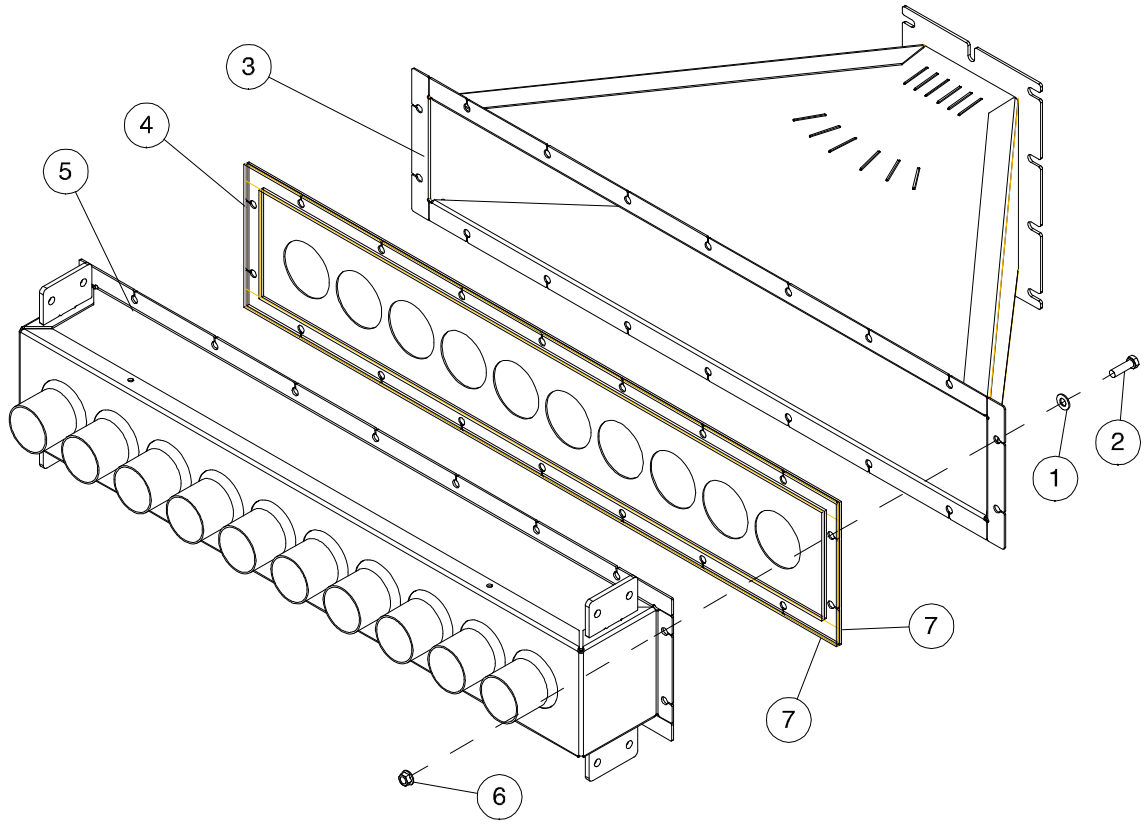

Used only on Dual Fan Assembly

Item	Part No.	Description	Qty
1	D-5489	Washer - 13/32 ID x 13/16 OD x 16 Ga	18
2	W-187	Hex Bolt - 3/8 x 1 1/4 Lg	18
3	N53351	Plenum Body - 10 Outlet	1
4	N53352	Plenum Baffle - 10 Outlet	1
5	N53360	Plenum Front - 10 Outlet	1
6	S27987	Flange Lock Nut - 3/8 W/Center Lock	18
7	N15716	Seal Strip - 1/4 x 1 - Bulk/Foot	16 ft
	N53350	Plenum Assembly - Single Shoot (Includes All Above Items)	

Plenum - Single Fan
Double Shoot Plenum - 18 Outlet

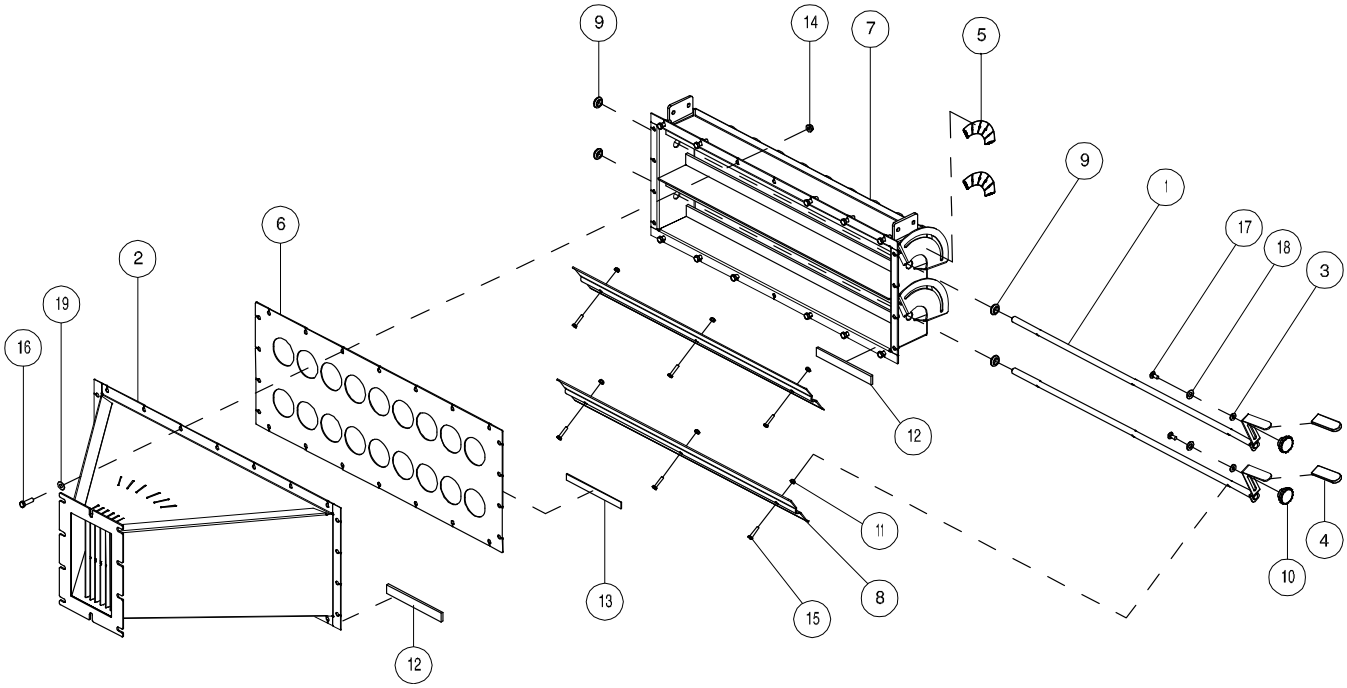

Used only on Single Fan Assembly

Item	Part No.	Description	Qty
1	N37374	Control Arm	2
2	N37469	Plenum Body - 18 Outlet	1
3	S-1198	Washer - 5/16 ID x 3/4 OD x 16 Ga.	2
4	N37483	Handle Grip	2
5	N37492	Decal - “Open/Closed” - Plenum	2
6	N37496	Plenum Baffle	9
7	N37458	Plenum Front	1
8	N37353	Plate	2
9	N37357	Grommet	4
10	N37456	Fluted Knob	2
11	N22778	Locknut - 1/4 Nylon Insert	6
12	N15716	Seal Strip - 1/4 x1 Lg (Bulk/ft)	14.1ft
13	D-5590	Seal Strip - 1/16 x 3/4 Lg (Bulk/ft)	5.7ft
14	S27987	Flange Lock Nut - 3/8 W/Center Lock	22
15	W-470	Hex Bolt - 1/4 x 1 1/4 Lg.	6
16	W-187	Hex Bolt - 3/8 x 1 1/4 Lg.	22
17	D-5259	Carriage Bolt - 5/16 x 3/4 Lg	2
18	S-1201	Washer - 15/32 ID x 59/64 OD x 16 Ga.	2
19	D-5489	Washer - 13/32 ID x 13/16 OD x 16 Ga	22
	N37459	Plenum Assembly - Dual Shoot (Includes All Above Items)	

Plenum Assembly - Single Fan
Double Shoot Plenum - 20 Outlet

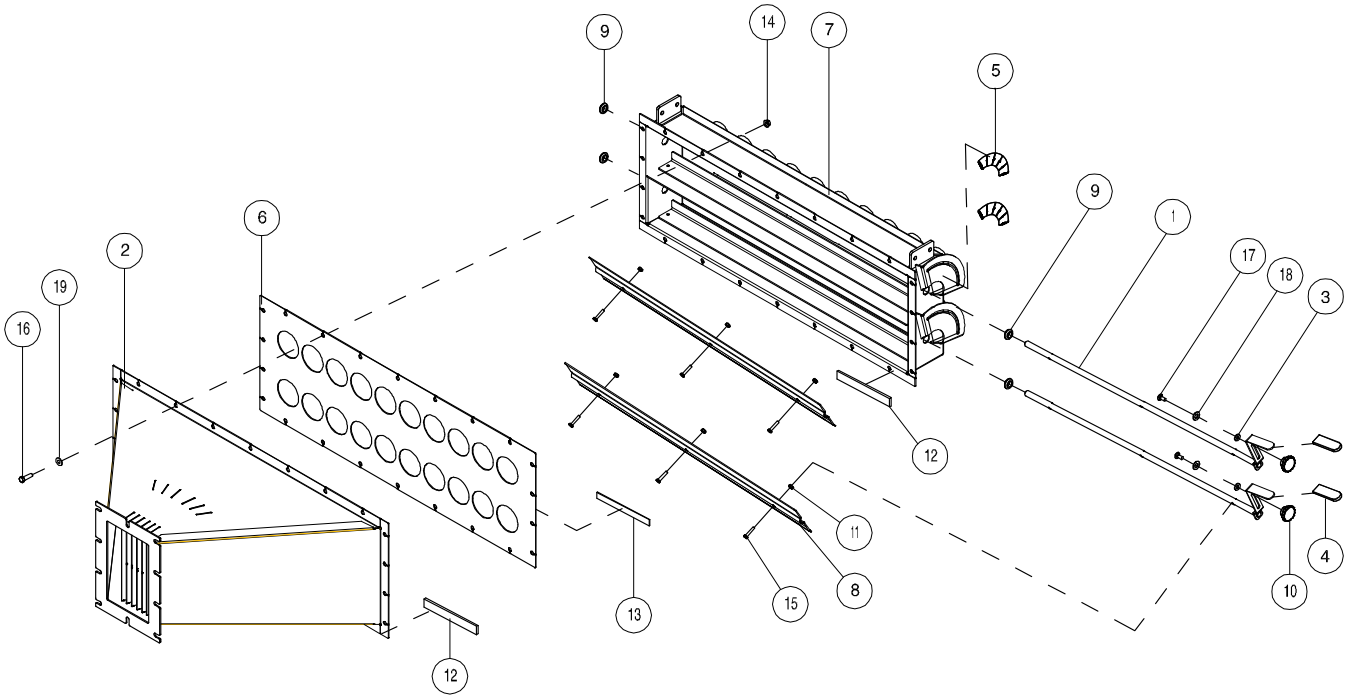

Used only on Single Fan Assembly

Item	Part No.	Description	Qty
1	N53374	Control Arm	2
2	N53371	Plenum Body - 20 Outlet	1
3	S-1198	Washer - 5/16 ID x 3/4 OD x 16 Ga	2
4	N37483	Handle Grip	2
5	N37492	Decal - “Open/Closed” - Plenum	2
6	N53385	Plenum Baffle	9
7	N53380	Plenum Front	1
8	N53375	Plate	2
9	N37357	Grommet	4
10	N37456	Fluted Knob	2
11	N22778	Locknut - 1/4 Nylon Insert	6
12	N15716	Seal Strip - 1/4 x1 Lg (Bulk/ft)	14.1ft
13	D-5590	Seal Strip - 1/16 x 3/4 Lg (Bulk/ft)	5.7ft
14	S27987	Flange Lock Nut - 3/8 W/Center Lock	22
15	W-470	Hex Bolt - 1/4 x 1 1/4 Lg	6
16	W-187	Hex Bolt - 3/8 x 1 1/4 Lg	22
17	D-5259	Carriage Bolt - 5/16 x 3/4 Lg	2
18	S-1201	Washer - 15/32 ID x 59/64 OD x 16 Ga	2
19	D-5489	Washer - 13/32 ID x 13/16 OD x 16 Ga	22
	N53370	Plenum Assembly - Dual Shoot (Includes All Above Items)	

Pipe Cross Reference Chart

For Customers wanting regular painted steel pipes.
Below chart cross references the Stainless Pipes to the Painted Steel Pipes.

Stainless		Painted Steel
N62400	Pipe SS - 51 Lg (9365)	N51416
N62401	Pipe SS - 63 1/4 (9445)	N44574
N62402	Pipe SS - 63 Lg (9555)	N51769
N62403	Pipe SS - 158 Lg x 41 9/16 High (9365)	N51418
N62404	Pipe SS - 173 1/8 Lg x 26 3/4 H (9445 prior to 2016)	N44687
N62405	**Pipe SS - 180 7/8 Lg x 26 3/4 High (9445 - 2016)**	**N58973**
N62406	Pipe SS - 172 5/8 Lg x 26 3/4 High (9555)	N51762
N62407	Pipe SS - 124 Lg x 41.6 High (9450)	N51417
N62408	Pipe SS - 132 Lg x 26.75 High (9550 prior to 2016)	N51415
N62409	**Pipe SS - 145 Lg x 26.75 High (9550 - 2016)**	**N58972**
N62410	Pipe SS - 132 5/8 Lg x 26 3/4 High (9680)	N51763
N62411	Pipe SS - 34 Lg (9450)	N49613
N62412	Pipe SS - 63.25 Lg (9550)	N49930
N62413	Pipe SS - 45 1/2 (9800 - 91000)	N51767
N62414	Pipe SS - 95 Lg x 26.75 High (9650 prior to 2016)	N44573
N62415	**Pipe SS - 109 Lg x 26.75 High (9650 - 2016)**	**N58971**
N62416	Pipe SS - 84 Lg x 27.625 High (9535)	N49611
N62417	Pipe SS - 92 3/4 Lg x 26 3/4 High (9800 - 91000)	N51764
N62418	Pipe SS - 23 Lg (9650)	N45190
N62419	Pipe SS - 17 Lg (9535)	N49612
N62420	Pipe SS - 27 1/2 Lg (9800 - 91000)	N51768
N62421	Pipe SS - 68 Lg (9365)	N28825
N62422	Pipe SS - 95 Lg(9445)	N37952
N62423	Pipe SS - 35 1/4 Lg x 7 High **(9555)**	N51761

Stainless Head Conversion Kits

Morris has introduced Kits to convert older Morris Seeding Units to the new stainless steel divider heads which were introduced on the QUANTUM Air Drill. Below is a chart of the kits available and the components in each kit.

To view pricing and to place an order, please see BPI (Online Ordering System). Kits are made as ordered.

See following pages for parts breakdown.

Stainless Steel Divider Head Conversion Kits									
		Kit Numbers							
Part No.	Description	N69271 7OUT-SS	N69272 7OUT-DS	N69273 8OUT-SS	N69274 8OUT-DS	N69275 9OUT-SS	N69276 9OUT-DS	N69277 10OUT-SS	N69278 10OUT-DS
N66507	Stainless Divider Head Assy - 7	1	2	--	--	--	--	--	--
N66508	Stainless Divider Head Assy - 8	--	--	1	2	--	--	--	--
N66509	Stainless Divider Head Assy - 9	--	--	--	--	1	2	--	--
N66510	Stainless Divider Head Assy - 10	--	--	--	--			1	2
N66662	Diffuser - Straight	1	2	1	2	1	2	1	2
N65131	Hose Finger Adapter	7	14	8	16	9	18	10	20
N66140	Dual Head Mounting Plate - LOW	--	2	--	2	--	2	--	2
N69290	Head Conversion Bracket	1	1	1	1	1	1	1	1
N69296	Adapter Insert Tube	1	1	1	1	1	1	1	1
N69295	Extension Tube	1	1	1	1	1	1	1	1
N36148	U-Bolt - 3/8 X 3 X 4	1	1	1	1	1	1	1	1
W-475	Bolt - 3/8 X 1	1	1	1	1	1	1	1	1
W-523	Lock Washer - 3/8	2	2	2	2	2	2	2	2
W-514	Hex Nut - 3/8	2	2	2	2	2	2	2	2
W-469	Hex Bolt - 1/4 X 3/4	4	8	4	8	4	8	4	8
W-1552	Hex Bolt - 1/4 X 1	2	6	2	6	2	6	2	6
D-5277	Serrated Lock Nut - 1/4	6	14	6	14	6	14	6	14
K24396	Set Screw - 1/4	2	2	2	2	2	2	2	2
N11470	Hose Clamp - 1-1/4"	14	28	16	32	18	36	20	40
N11905	Hose Clamp - 2-1/2"	1	2	1	2	1	2	1	2

SS - Single Shoot

DS - Double Shoot

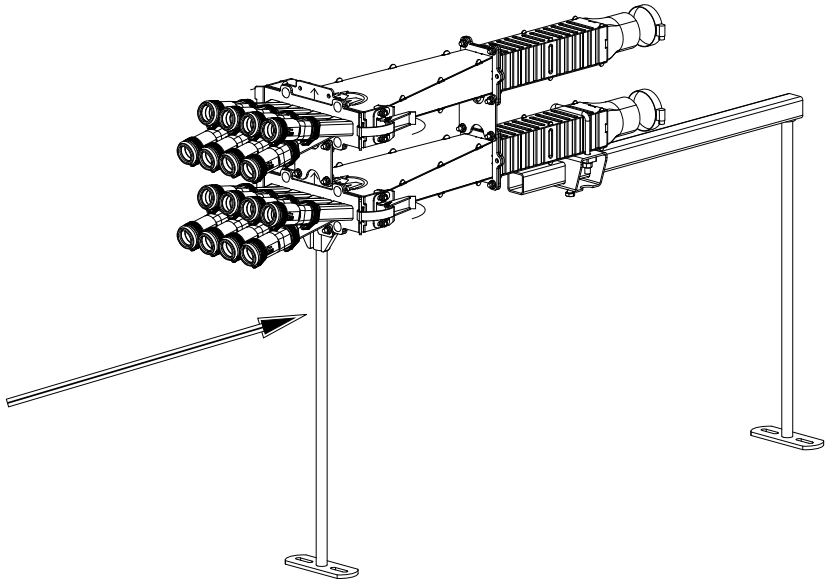

Head Assemblies mount directly to existing Head Stands.

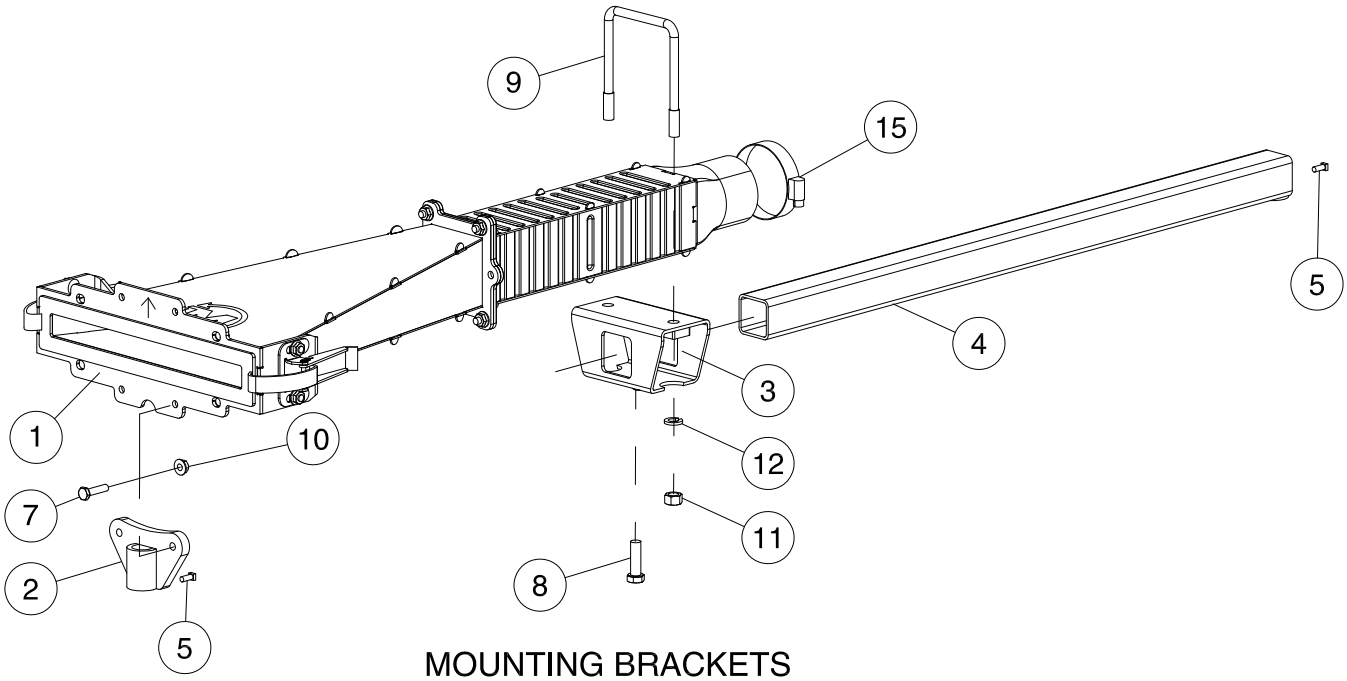

MOUNTING BRACKETS

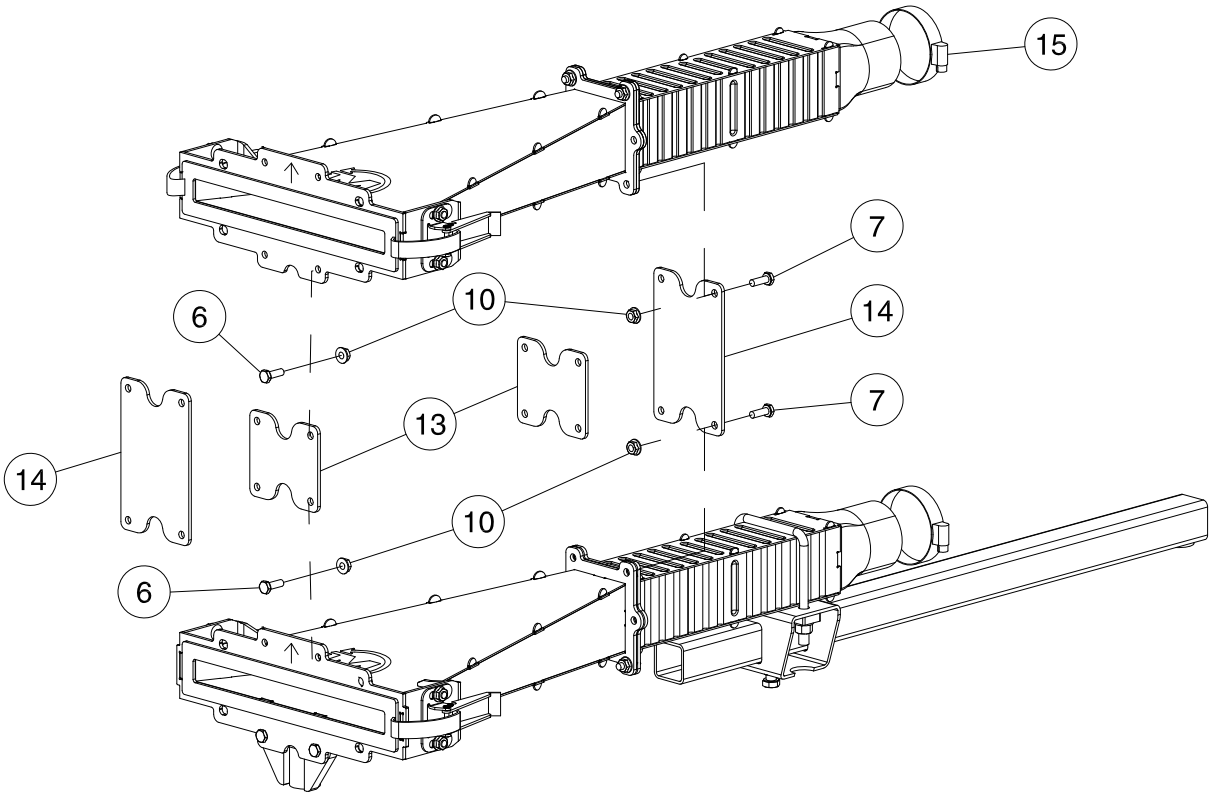

MOUNTING OPTION DUAL SHOOT

Stainless Head Conversion - Divider Head Mounting Stands

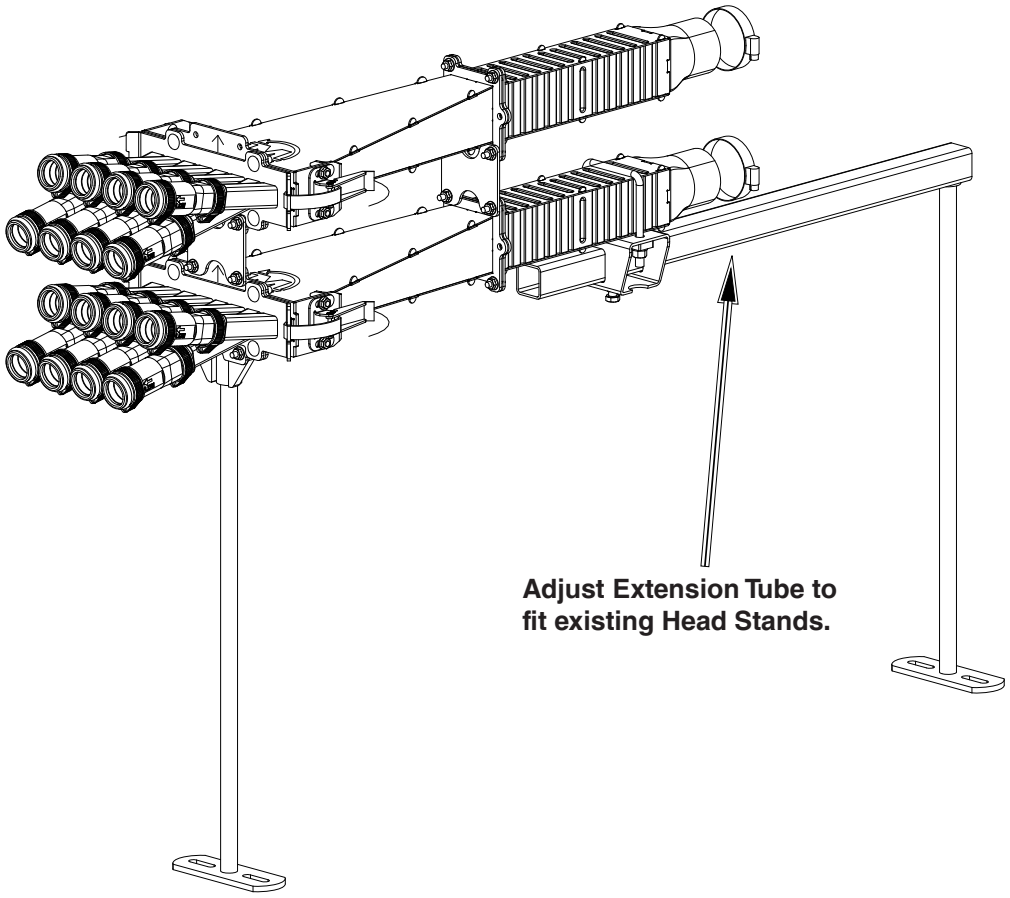

Item	Part No.	Description	Qty
1	* * * * *	Divider Head and Diffuser Tube Assembly - See next page	1
2	N69290	Bracket Head Adapter Stand	1
3	N69296	Adapter Insert Tube	1
4	N69295	Extension Tube	1
5	N24396	Set Screw - 1/4 x 1/2 Lg	2
6	W-469	Hex Head - 1/4 x 3/4 Lg	4
7	W-1552	Hex Bolt - 1/4 x 1 Lg	2
8	W-475	Hex Bolt - 3/8 x 1 Lg	1
9	N36148	U-Bolt - 3/8 x 3 x 4 UL	2
10	D-5277	Lock Nut - 1/4 Serrated Flange	10
11	W-514	Hex Nut - 3/8	2
12	W-523	Lockwasher - 3/8	2
13	N66140	Dual Head Mounting Plate Low Profile	2
14	N66141	Dual Head Mounting Plate High Profile (Optional)	2
15	N11905	Hose Clamp - 2 1/2 - HC5-44	1

Divider Head Assembly
Regular 1 inch Square Fingers

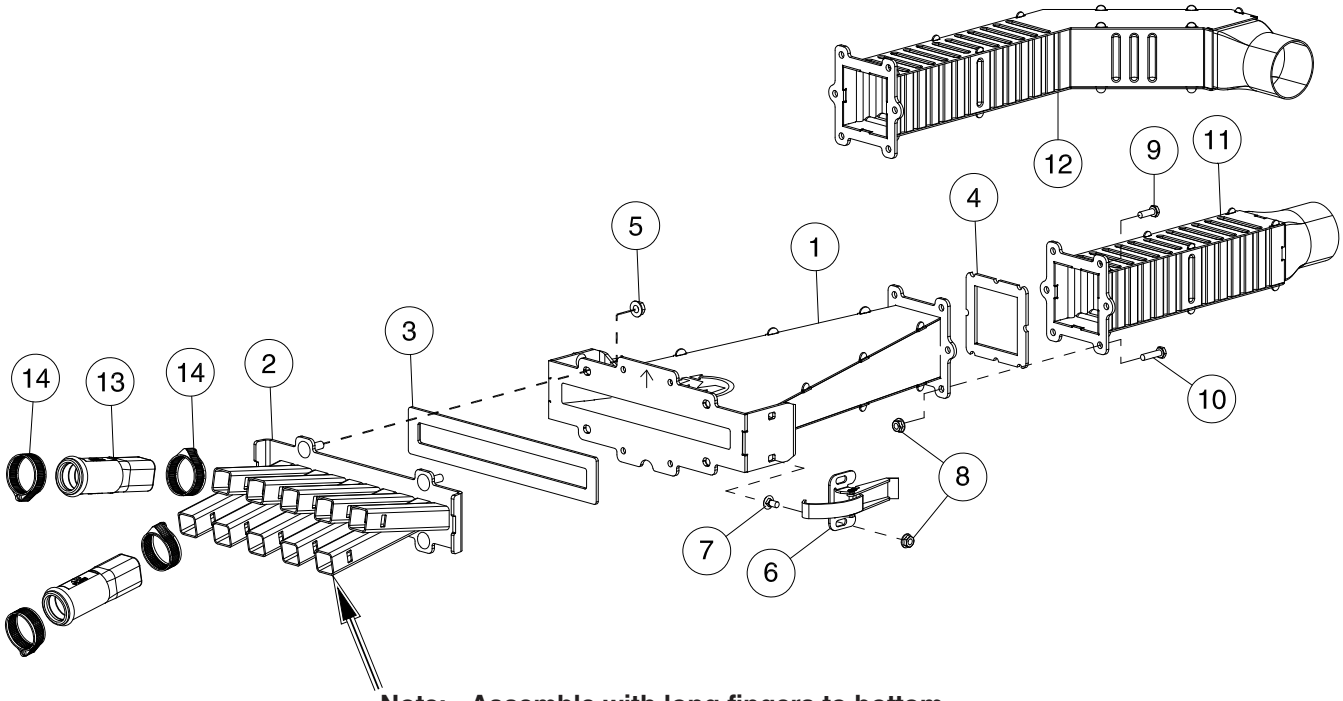

Note: Assemble with long fingers to bottom.

Item	Part No.	Description	Qty
		SIX OUTLET DIVIDER HEAD	
1	N72163	6 Outlet Divider Head - Main Body (N66556)	1
2	N66516	6 Outlet Flange - 1 inch Square Fingers	1
3	N66176	Seal - 6 Outlet	1
4	N66175	Diffuser Seal	1
5	D-5278	Flange Lock Nut - 5/16	4
6	N42213	Over-Center Catch	2
7	N53215	Carriage Bolt - 1/4 x 1/2 Lg	4
8	D-5277	Flange Lock Nut - 1/4 Serrated	4
	N66506	**6 Outlet Divider Head Assembly (Includes All Above Items)**	
13	N65131	Adapter Secondary Hose - Fits Hose .929 ID x 1.169 OD - Prior to 2023	6
	N72996	**Adapter Secondary Hose - Fits Hose 1 ID x1.25 OD - 2023 to Present**	
14	N11470	Hose Clamp	12
		SEVEN OUTLET DIVIDER HEAD	
1	N72166	7 Outlet Divider Head - Main Body (N66557)	1
2	N66517	7 Outlet Flange	1
3	N66177	Seal - 7 Outlet	1
4	N66175	Diffuser Seal	1
5	D-5278	Flange Lock Nut - 5/16	4
3	N42213	Over-Center Catch	2
4	N53215	Carriage Bolt - 1/4 x 1/2 Lg	4
6	D-5277	Flange Lock Nut - 1/4 Serrated	4
	N66507	**Divider Head Assembly - 7 Outlet (Includes All Above Items)**	
13	N65131	Adapter Secondary Hose - Fits Hose .929 ID x 1.169 OD - Prior to 2023	7
	N72996	**Adapter Secondary Hose - Fits Hose 1 ID x1.25 OD - 2023 to Present**	
14	N11470	Hose Clamp	14

Distribution - Quantum - Regular

Item	Part No.	Description	Qty
		EIGHT OUTLET DIVIDER HEAD	
1	N72160	8 Outlet Divider Head - Main Body (N66558)	1
2	N66518	8 Outlet Flange - 1 inch Square Fingers	1
3	N66178	Seal - 8 Outlet	1
4	N66175	Diffuser Seal	1
5	D-5278	Flange Lock Nut - 5/16	4
6	N42213	Over-Center Catch	2
7	N53215	Carriage Bolt - 1/4 x 1/2 Lg	4
8	D-5277	Flange Lock Nut - 1/4 Serrated	4
	N66508	**Divider Head Assembly - 8 Outlet (Includes All Above Items)**	
13	N65131	Adapter Secondary Hose - Fits Hose .929 ID x 1.169 OD - Prior to 2023	8
	N72996	**Adapter Secondary Hose - Fits Hose 1 ID x1.25 OD - 2023 to Present**	
14	N11470	Hose Clamp	16
		NINE OUTLET DIVIDER HEAD	
1	N72169	9 Outlet Divider Head - Main Body (N66559)	1
2	N66519	9 Outlet Flange - 1 inch Square Fingers	1
3	N66179	Seal - 9 Outlet	1
4	N66175	Diffuser Seal	1
5	D-5278	Flange Lock Nut - 5/16	4
6	N42213	Over-Center Catch	2
7	N53215	Carriage Bolt - 1/4 x 1/2 Lg	4
8	D-5277	Flange Lock Nut - 1/4 Serrated	4
	N66509	**Divider Head Assembly - 9 Outlet (Includes All Above Items)**	
13	N65131	Adapter Secondary Hose - Fits Hose .929 ID x 1.169 OD - Prior to 2023	9
	N72996	**Adapter Secondary Hose - Fits Hose 1 ID x1.25 OD - 2023 to Present**	
14	N11470	Hose Clamp	18
		TEN OUTLET DIVIDER HEAD	
1	N72172	10 Outlet Divider Head - Main Body (N66560)	1
2	N66520	10 Outlet Flange - 1 inch Square Fingers	1
3	N66180	Seal - 10 Outlet (Not Shown)	1
4	N66175	Diffuser Seal	1
5	D-5278	Flange Lock Nut - 5/16	4
6	N42213	Over-Center Catch	2
7	N53215	Carriage Bolt - 1/4 x 1/2 Lg	4
8	D-5277	Flange Lock Nut - 1/4 Serrated	4
	N66510	**Divider Head Assembly - 10 Outlet (Includes All Above Items)**	
13	N65131	Adapter Secondary Hose - Fits Hose .929 ID x 1.169 OD - Prior to 2023	10
	N72996	**Adapter Secondary Hose - Fits Hose 1 ID x1.25 OD - 2023 to Present**	
14	N11470	Hose Clamp - HC5-20 - 20mm Diameter	20
		DIFFUSER PIPE	
8	D-5277	Flange Lock Nut - 1/4 Serrated	4
9	W-469	Hex Head - 1/4 x 3/4 Lg	2
10	W-1552	Hex Bolt - 1/4 x 1 Lg	2
11	N66662	Diffuser - Straight - 2 1/12 outlet (Prior to April 2021)	
	N66663	**Diffuser - Straight - 3 outlet (April 2021)**	**1**
12	N66672	Diffuser - 90 Deg Elbow - 2 1/12 outlet (Prior to April 2021)	
	N66673	**Diffuser - 90 Deg Elbow - 3 outlet (April 2021)**	**1**
15	R480034	Secondary Hose - .929 ID x 1.169 OD/ft (75 ft roll) Not Shown	

Notes

Section 11:
Fan

Section Contents

Rem Hydraulic Drive - N37826 11-2
Single Fan - Tow Between 11-3
Dual Fan - Tow Between 11-4
Single Fan - Tow Behind 11-6
Dual Fan - Tow Behind 11-8
Orbit Motor 11-10

Fan Assembly
Rem Hydraulic Drive - N37826

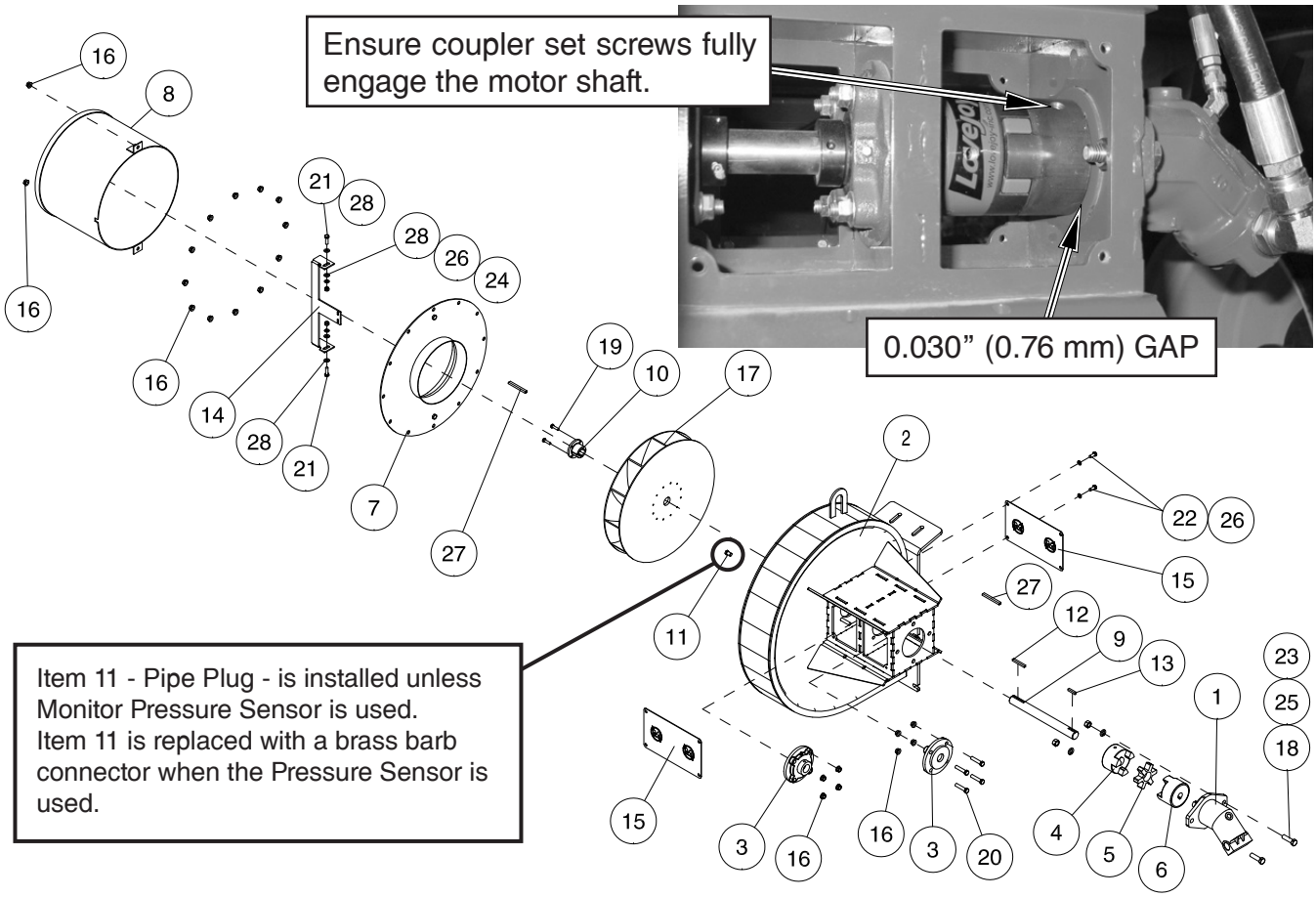

Item	Part No.	Description	Qty
1	N37742	Hydraulic Motor - 16cc - 20mm shaft - Prior to 2014	1
	N53243	Rexroth Obit Motor - 16cc - Internal Check Valve - 2014 to present	1
2	N37802	Blower Housing	1
3	N37810	Bearing	2
4	N37811	Coupler Hub	1
5	N37813	Insert	1
6	N37816	Coupler Hub - 20mm shaft	1
7	N37820	Inlet Assembly	1
8	N37821	Inlet Screen	1
9	N37822	Drive Shaft	1
10	N37823	Bushing - Split Taper	1
11	N37905	Pipe Plug -1/8 MNPT	1
12	N37824	Key - 1/4 x 1/4 x 2 1/8 Lg	1
13	S10730	Key - 1/4 x 1/4 x 1 1/4 Lg	1
14	N37809	Fan Sensor Mount	1
15	N37825	Cover Plate	2
16	D-5279	Flange Locknut - 3/8	22
17	N37819	Rotor	1
18	S-1189	Hex Bolt - 1/2 x 1 3/4 Lg	2
19	W-1552	Hex Bolt - 1/4 x 1 Lg	2
20	W-619	Hex Bolt - 3/8 x 1 3/4 Lg	4
21	W-471	Hex Bolt - 5/16 x 1 Lg	2
22	F-1767	Hex Bolt - 5/16 x 3/4 Lg	8
23	W-516	Hex Nut - 1/2	2
24	W-513	Hex Nut - 5/16	2
25	W-525	Lockwasher - 1/2	2
26	W-522	Lockwasher - 5/16	10
27	D-5590	Seal - 1/16 x 3/4 (Bulk/ft)	9ft
28	D-5488	Washer - 11/32 ID x 11/16 OD x 16 Ga	4

Single Fan - Tow Between

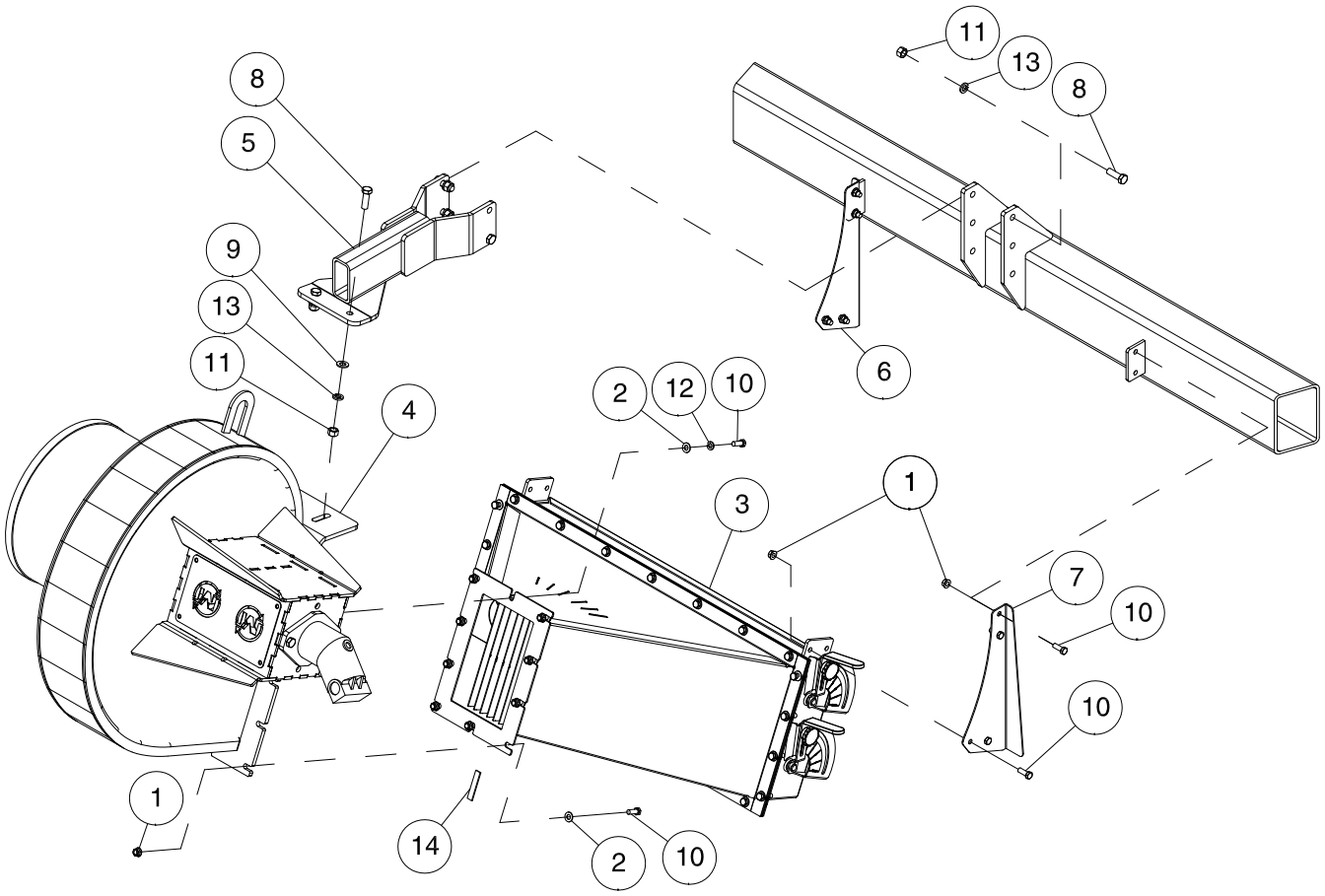

Item	Part No.	Description	Qty
1	D-5279	Serrated Lock Nut - 3/8	17
2	D-5489	Washer - 13/32 ID x 13/16 OD x 16 Ga	10
3	N37459	Plenum Assembly - 18 Outlet	1
	N53370	Plenum Assembly - 20 Outlet - 9800 and 91000	1
4	N37826	Fan	1
5	N44568	Fan Mount	1
6	N48080	Bracket - Left - 9365 and 9450 (9445, 9550 and 9650 Prior to 2016)	1
	N44190	Bracket - Left - 9800 (9445, 9550 and 9650 2016 to present)	1
7	N48090	Bracket - Left - 9365 and 9450 (9445, 9550 and 9650 Prior to 2016)	1
	N44185	Bracket - Right - 9800 (9445, 9550 and 9650 2016 to present)	1
8	S-776	Hex Bolt - 1/2 x 1 1/2 Lg	6
9	S-1925	Flat Washer - 17/32 ID x 1 OD x 13 Ga	2
10	W-475	Hex Bolt - 3/8 x 1 Lg	18
11	W-516	Hex Nut - 1/2	8
12	W-523	Lockwasher - 3/8	1
13	W-525	Lockwasher - 1/2	8
14	D-5590	Seal Strip - 1/16 x 3/4 (Plenum to Fan)	5.5ft

Dual Fan - Tow Between

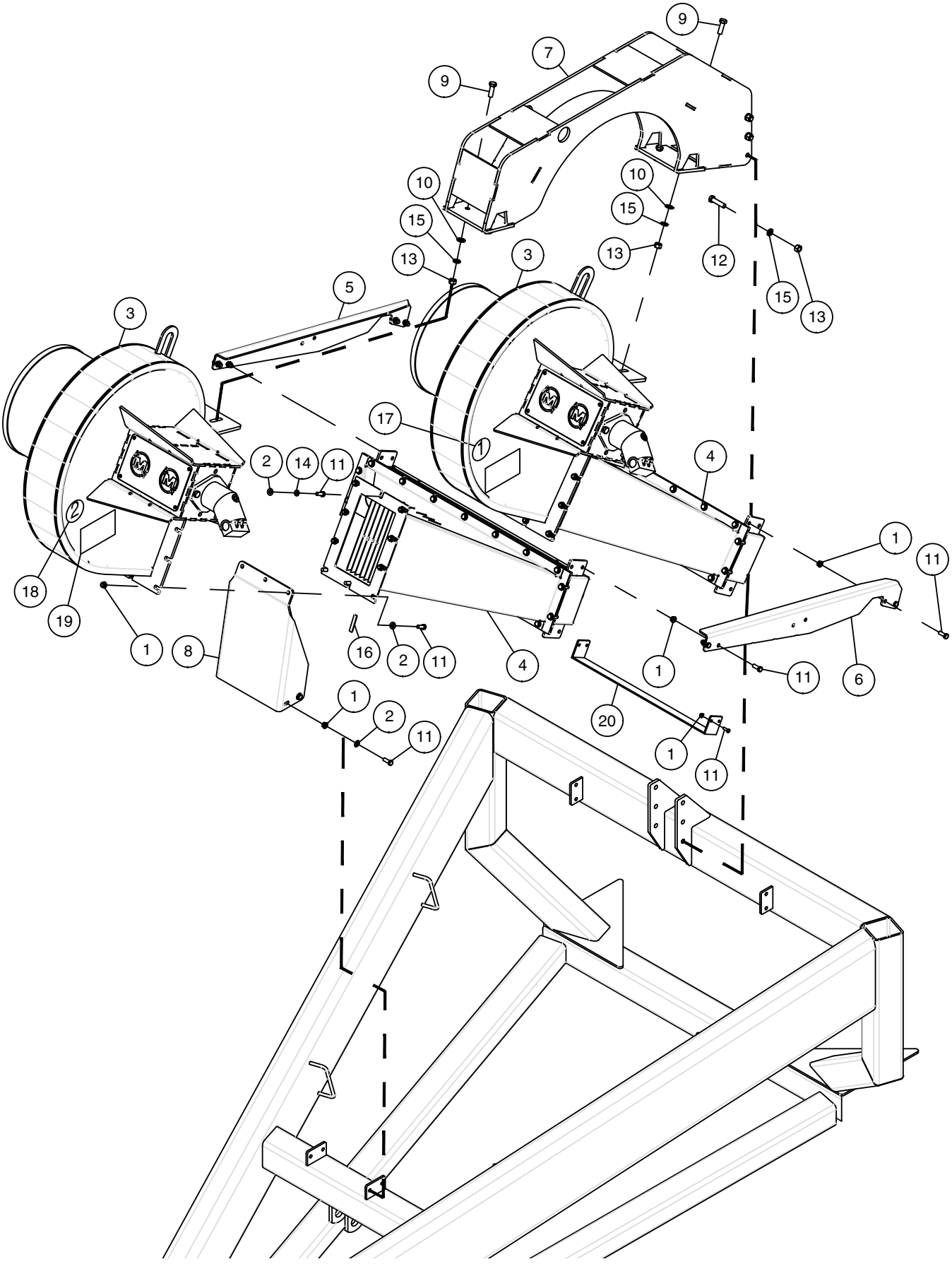

Dual Fan - Tow Between

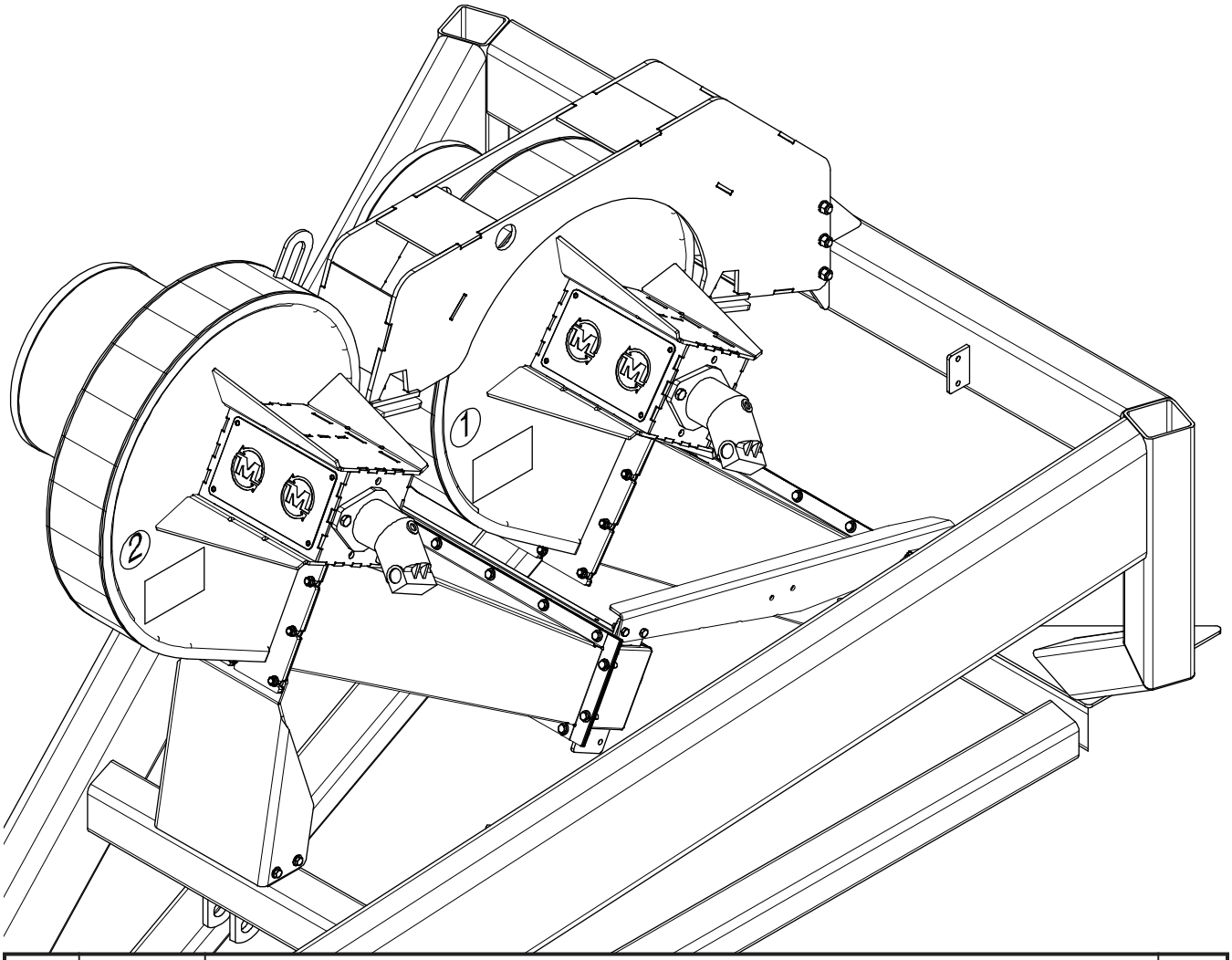

Item	Part No.	Description	Qty
1	D-5279	Lock Nut - 3/8 Serrated Flange	30
2	D-5489	Washer - 13/32 ID x 13/16 OD x 16 Ga	24
3	N37826	Fan	2
4	N47800	Single Shoot Plenum Assembly - 9 Outlet (9365 to 9650)	2
	N53350	Single Shoot Plenum Assembly - 10 Outlet (9800 and 91000)	2
5	N51139	Support Bracket - Right	1
6	N51140	Support Bracket - Left	1
7	N51145	Dual Fan Mount	1
8	N51233	Mounting Bracket - 9445, 9550 and 9650 - Prior to 2016	1
	N58303	**Mounting Bracket - 9445, 9550 and 9650 - 2016 to present**	**1**
	N51234	Mounting Bracket - 9365 and 9450	1
	N51792	Mounting Bracket - 9800 and 91000	1
9	S-776	Hex Bolt - 1/2 x 1 1/2 Lg	4
10	S-1925	Flat Washer - 17/32 ID x 1 OD x 13 Ga	4
11	W-475	Hex Bolt - 3/8 x 1 Lg	32
12	W-488	Hex Bolt - 1/2 x 2 Lg	6
13	W-516	Hex Nut - 1/2	14
14	W-523	Lockwasher - 3/8	2
15	W-525	Lockwasher - 1/2	14
16	D-5590	Seal Strip - 1/16 x 3/4 (Plenum to Fan)	5.5ft
17	N50177	Decal - Green - 1	2
18	N50178	Decal - Blue - 2	2
19	N19023	Decal - Danger - Hot	2
20	N51885	Hose Support Bracket	1

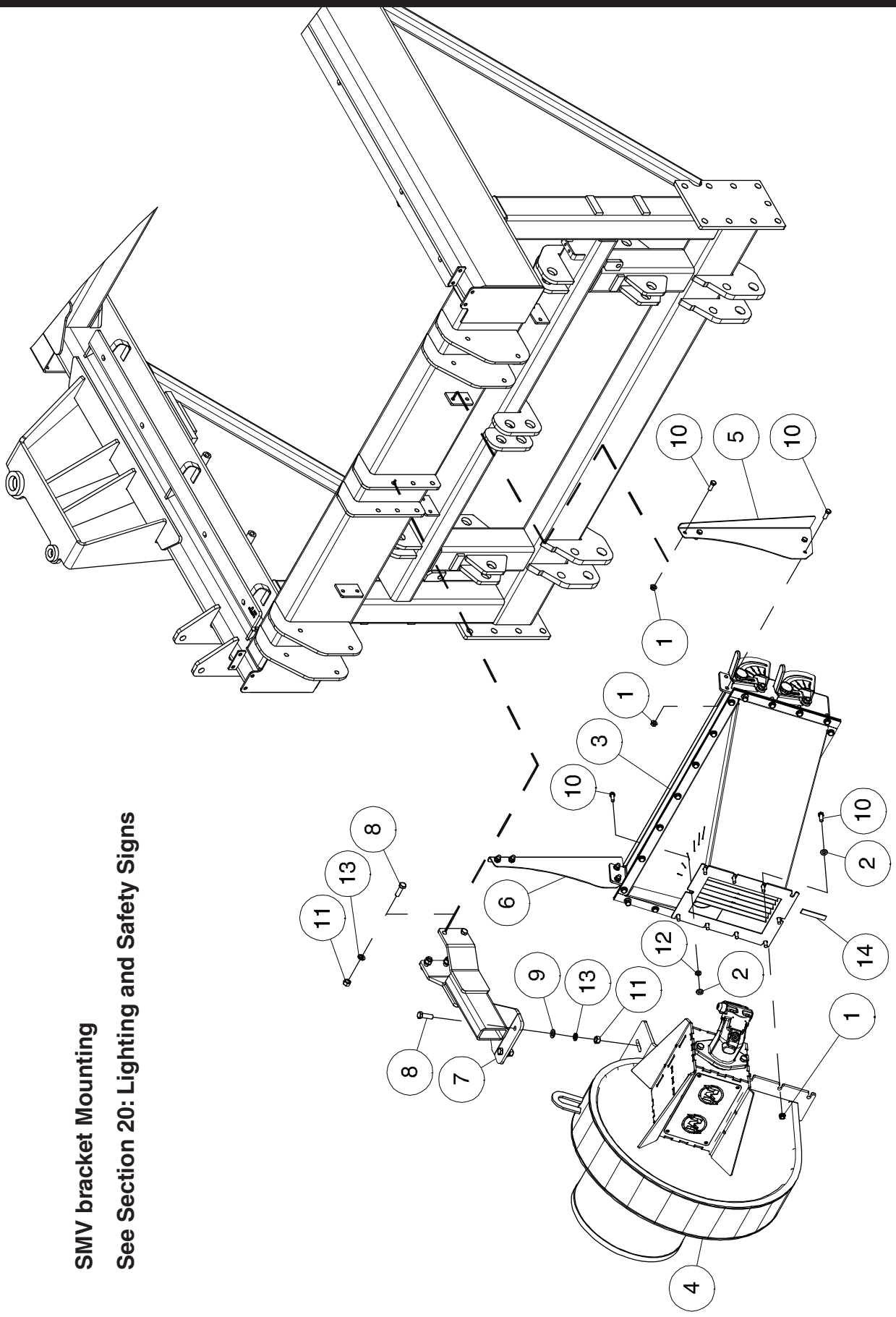

SMV bracket Mounting

See Section 20: Lighting and Safety Signs

Single Fan
Tow Behind

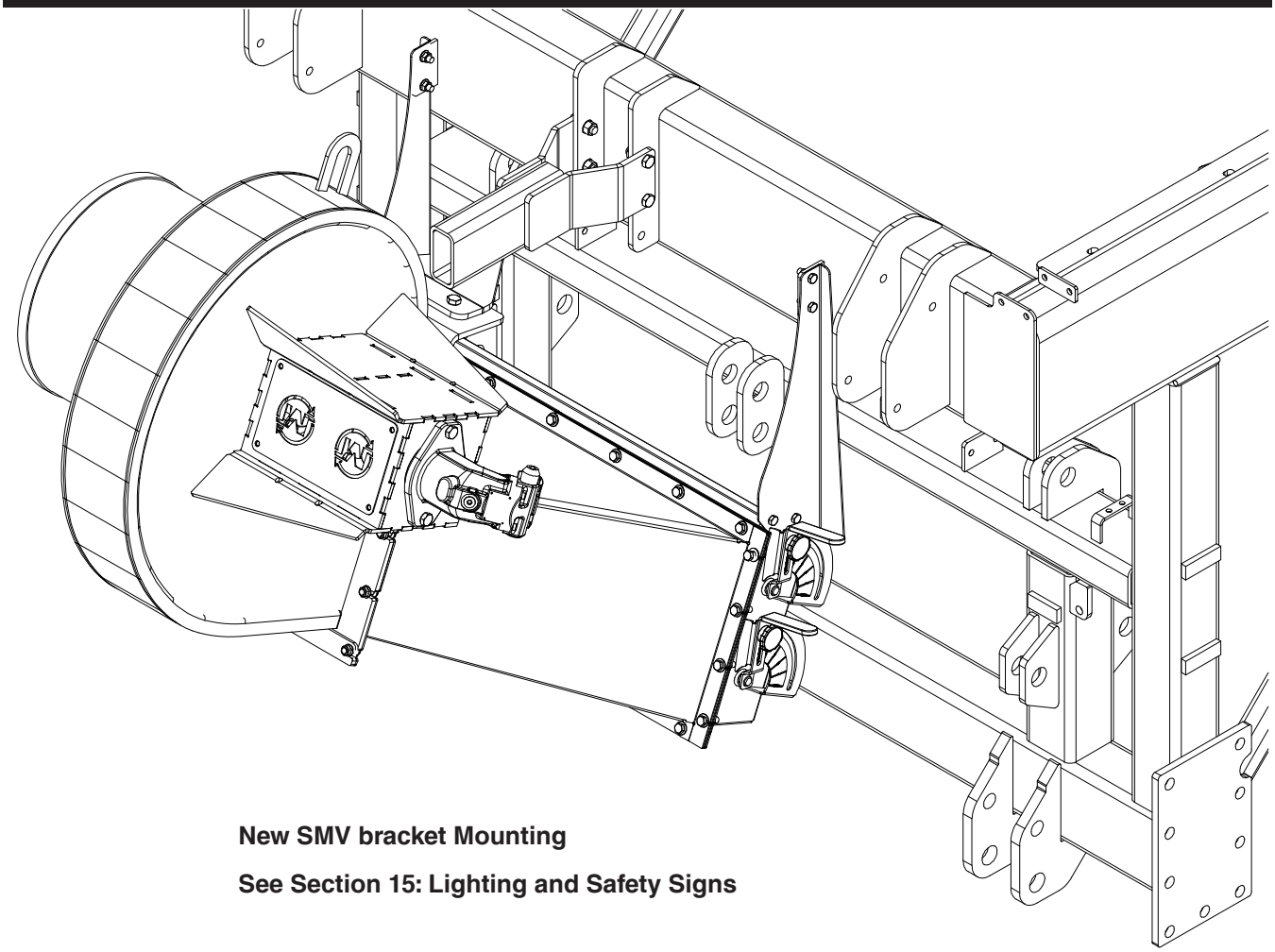

New SMV bracket Mounting

See Section 15: Lighting and Safety Signs

Item	Part No.	Description	Qty
1	D-5279	Lock Nut - 3/8 Serrated Flange	17
2	D-5489	Washer - 13/32 ID x 13/16 OD x 16 Ga	10
3	N37459	Plenum Assembly	1
4	N37826	Fan	1
5	N44185	Bracket - Right	1
6	N44190	Bracket - Left	1
7	N44568	Fan Mount	1
8	S-776	Hex Bolt - 1/2 x 1 1/2 Lg	6
9	S-1925	Flat Washer - 17/32 ID x 1 OD x 13 Ga	2
10	W-475	Hex Bolt - 3/8 x 1 Lg	18
11	W-516	Hex Nut - 1/2	8
12	W-523	Lockwasher - 3/8	1
13	W-525	Lockwasher - 1/2	8
14	**D-5590**	**Seal Strip - 1/16 x 3/4 (Plenum to Fan)**	**5.5ft**

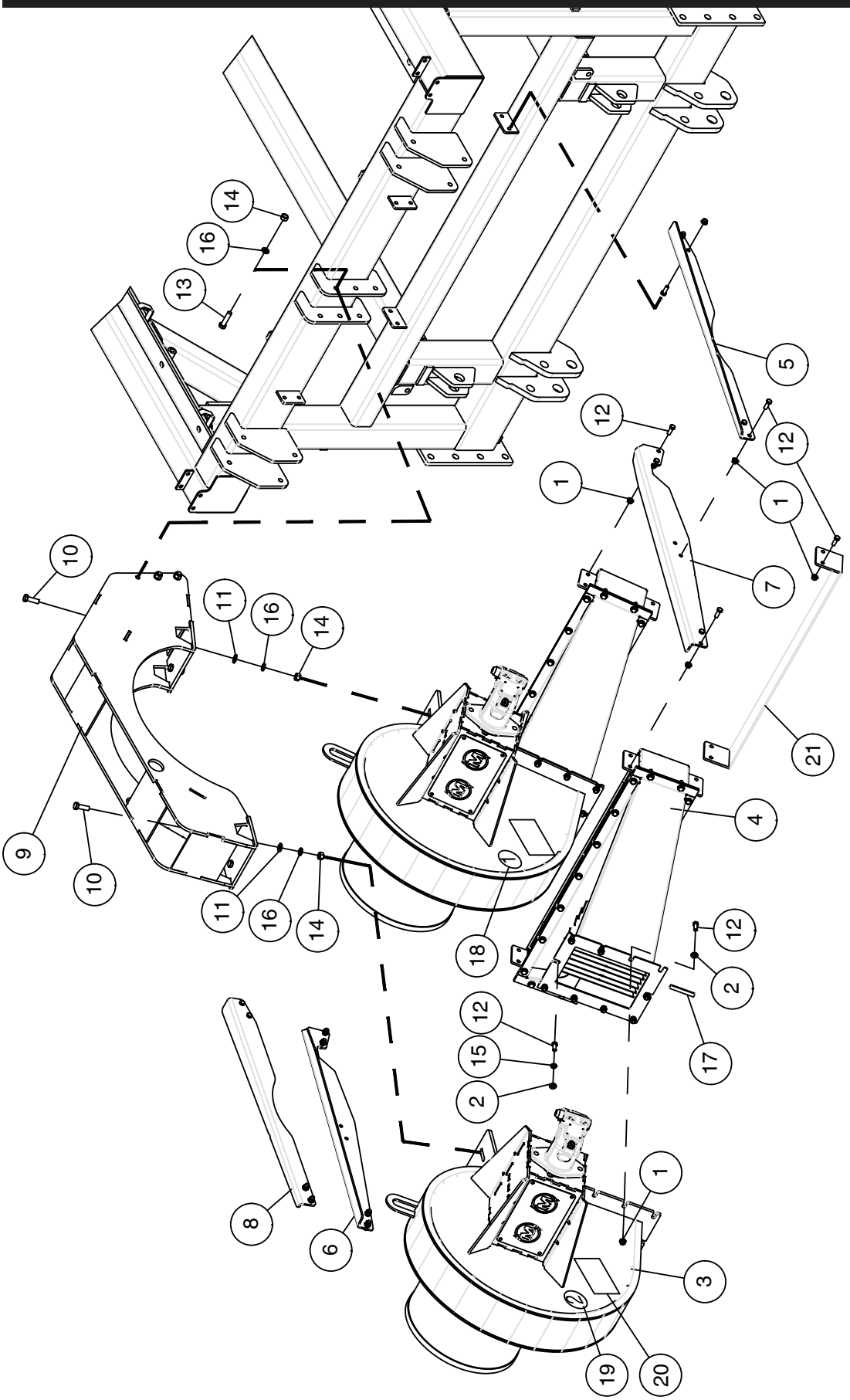

SMV bracket Mounting

See Section 20: Lighting and Safety Signs

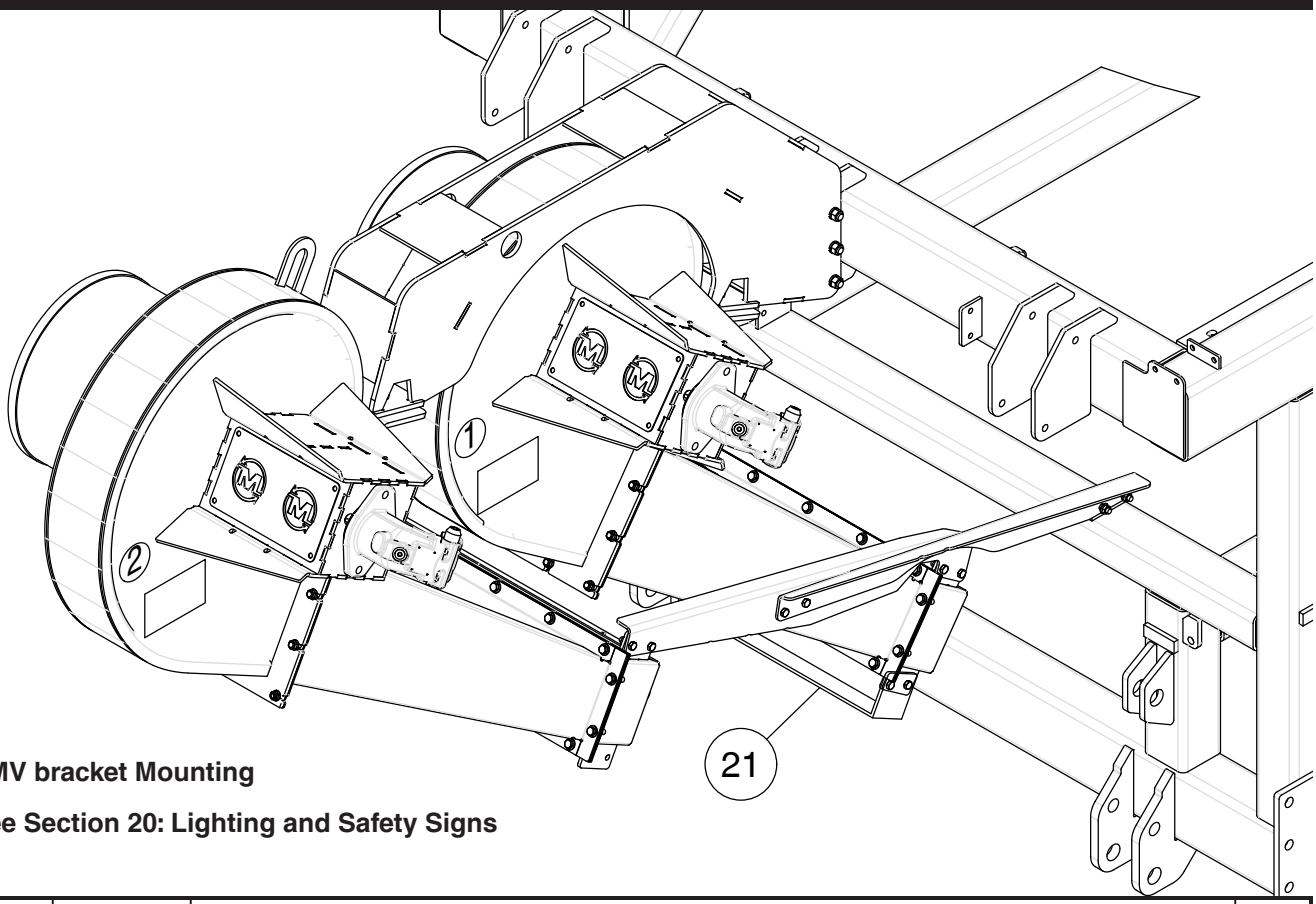

SMV bracket Mounting

See Section 20: Lighting and Safety Signs

Item	Part No.	Description	Qty
1	D-5279	Lock Nut - 3/8 Flange Serrated	34
2	D-5489	Washer - 13/32 ID x 13/16 OD x 16 Ga	20
3	N37826	Fan	2
4	N47800	Single Shoot Plenum Assembly - 9 Outlet (9365 to 9650)	2
	N53350	Single Shoot Plenum Assembly - 10 Outlet (9800 and 91000)	2
5	N50653	Dual Fan Support Link - Large Frame Right	1
	N51236	Dual Fan Support Link - Small Frame Right	
	N51793	Dual Fan Support Link - 9800 Right	
6	N51139	Support Bracket - Left	1
7	N51140	Support Bracket - Right	1
8	N51141	Dual Fan Support Link - Large Frame Left	1
	N51235	Dual Fan Support Link - Small Frame Left	
	N51794	Dual Fan Support Link - 9800 Left	
9	N51145	Dual Fan Mount	1
10	S-776	Hex Bolt - 1/2 x 1 1/2 Lg	4
11	S-1925	Flat Washer - 17/32 ID x 1 OD x 13 Ga	4
12	W-475	Hex Bolt - 3/8 x 1 Lg	36
13	W-488	Hex Bolt - 1/2 x 2 Lg	6
14	W-516	Hex Nut - 1/2 - 12 Unc - 2B	14
15	W-523	Lockwasher - 3/8	2
16	W-525	Lockwasher - 1/2	14
17	D-5590	Seal Strip - 1/16 x 3/4 (Plenum to Fan)	5.5ft
18	N50177	Decal - Green - 1	2
19	N50178	Decal - Blue - 2	2
20	N19023	Decal - Danger - Hot	2
21	N51885	Hose Support Bracket	1

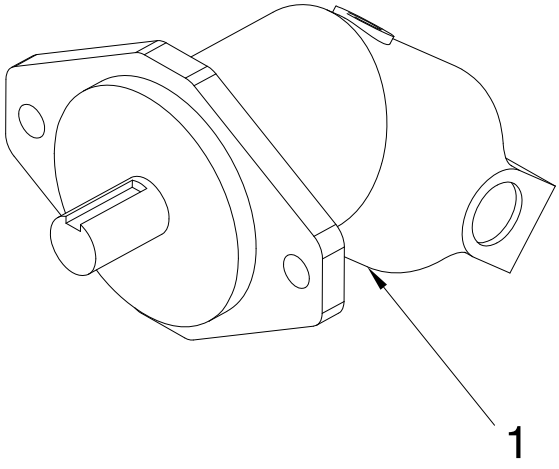

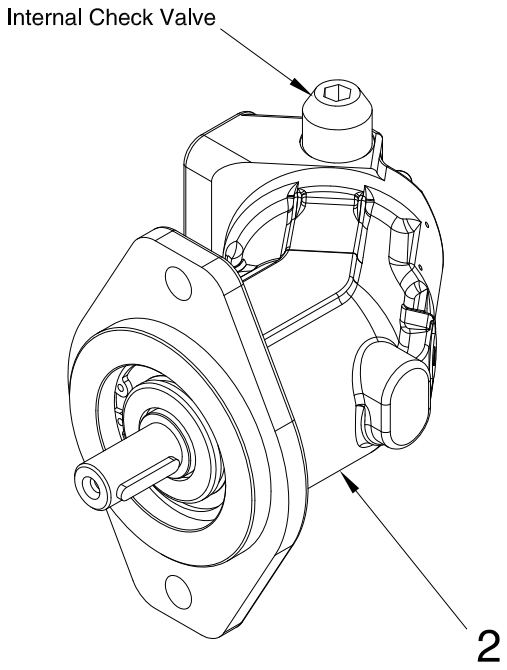

Item	Part No.	Description	Qty
1	N37742	Rexroth Orbit Motor - 16cc - 20mm shaft	1
2	N53243	Rexroth Obit Motor - 16cc - Internal Check Valve - **9800 Air Cart**	1
	N25507	Shaft Seal Only for above Rexroth Motors	1
	N25508	Seal Kit for above Rexroth Motors	1

Section 12:
Auger & Conveyor

Section Contents

Valve and Control Mount 12-2
- Version 2 - Prior to 2016 12-4
- Auger/Conveyor Valve Mount Behind 12-6
- Auger/Conveyor Valve Mount Between 12-7

Auger - 10 Inch 12-8
- Auger Arms Assembly - Standard - Prior To 2018 12-8
- Auger Arms Assembly - Standard - 2018 to Present 12-10
- Optional Outer Arm Lock Kit - N53934 12-12
- Auger Arms with Hydrualic Assist Assembly - Prior To 2018 12-14
- Auger Arms with Hydrualic Assist Assembly - 2018 to Present 12-16
- 10" Auger Assembly 12-18
- Auger Spout - Prior to 2014 12-20
- Auger Hopper - Standard 12-21
- 10" Extended Hopper 12-22

Auger - 12 Inch 12-24
- Auger Arms 12-24
- 12" Auger Assembly - Single Flow Hydraulics 12-26
- 12" Auger Assembly - Dual Flow Hydraulics 12-28
- 12" Extended Hopper 12-30

Conveyor 12-32
- Arms - 22 ft and 23 ft Conveyor - Prior to 2018 12-32
- Arms - 22 ft and 23 ft Conveyor - 2018 to Present 12-34
- Arms - 25 ft Conveyor 12-36

Conveyor Assembly 12-38
- 22 ft and 23 ft Conveyor 12-38
- 25 ft Conveyor 12-40

Conveyor - Lower End Group 12-42
- 22ft and 23 ft Conveyor - Rigid Rubber Hopper - SN 14809 to 16187 12-42
- 23 ft Conveyor - Collapsible Hopper - SN 16188 to SN 20521 12-44
- 23 ft Conveyor - Collapsible Hopper - SN 20522 and later 12-46
- 25 ft Conveyor - Collapsible Hopper 12-48

Conveyor - Upper End Group 12-50
- 22 ft Conveyor 12-50
- 23 ft and 25 ft Conveyor - SN 16185 to 20521 12-51
- 23 and 25 ft Conveyor - SN 20522 and Later 12-52

Orbit Motor 12-56

Valve and Control Mount

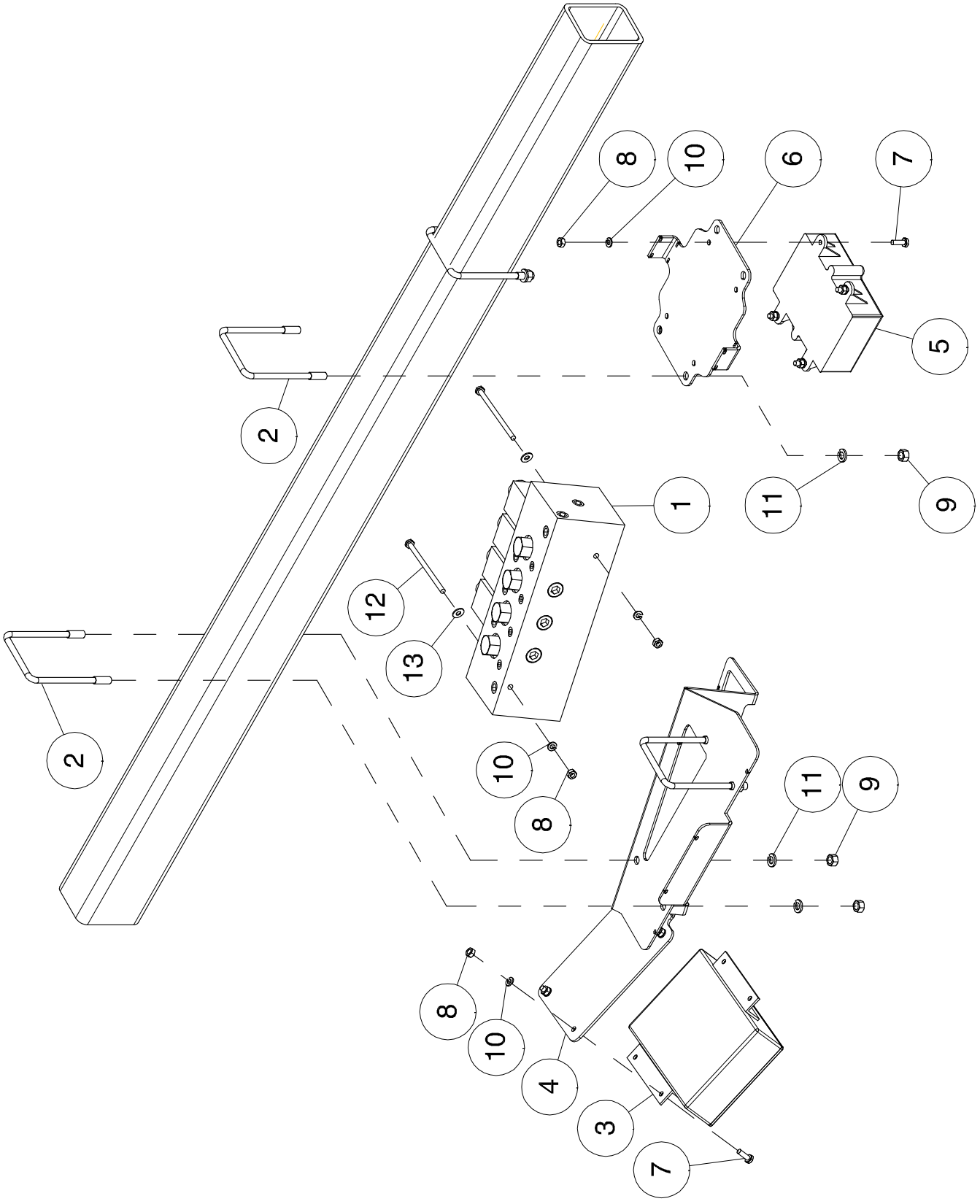

Valve and Control Mount

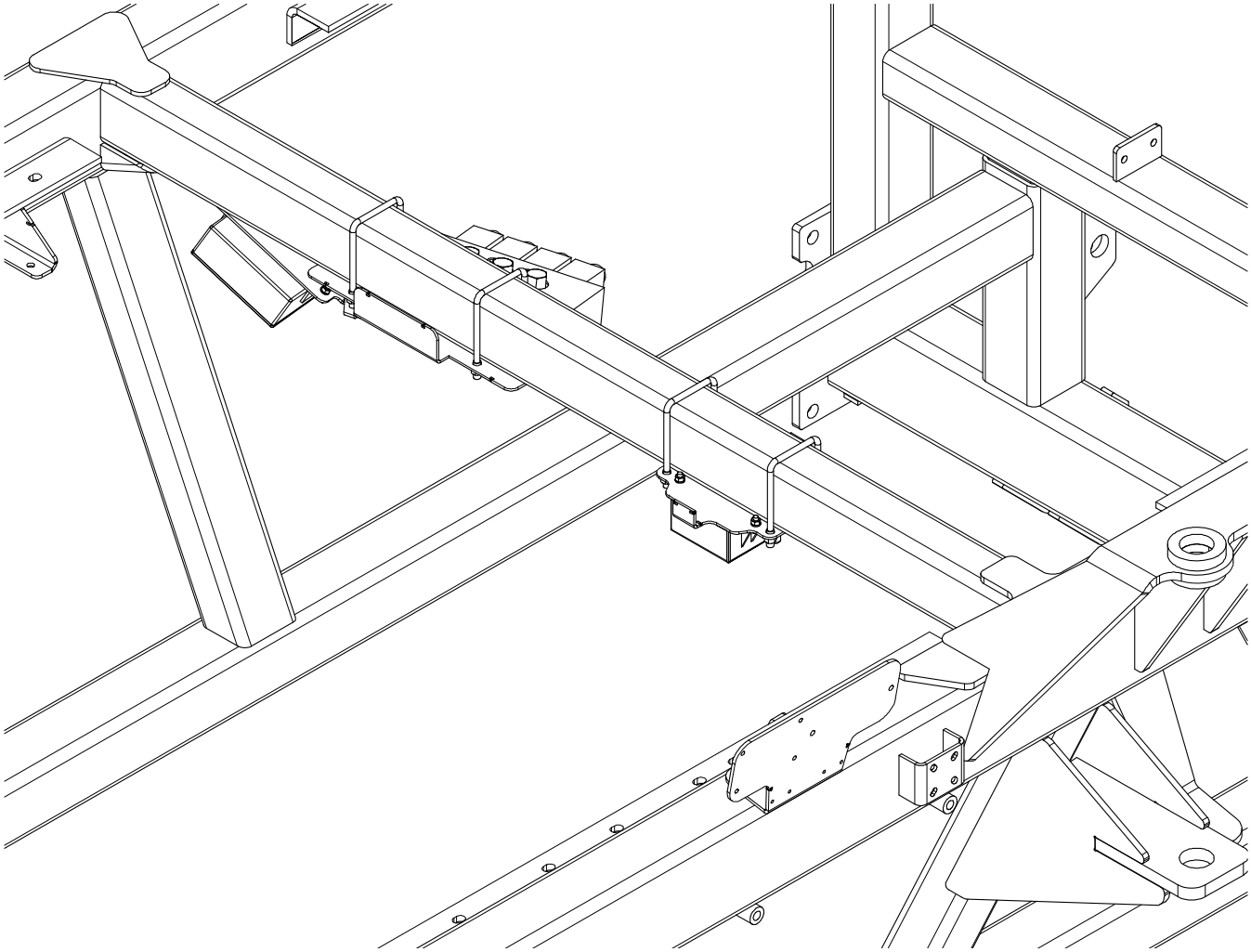

Item	Part No.	Description	Qty
1	N45195	Valve Manifold Assembly	1
2	N49642	U-Bolt - 3/8 x 3-1/16 x 4-15/16	4
	N19723	U-Bolt - 3/8 x 4 1/16 x 6 15/16 UL - 9800 and 91000	4
3	N50622	Multi Drive Electronic Control Unit - 4 Channel	1
4	N51548	Plate - Manifold Mount	1
5	N53020	Control Box - Wireless Auger Remote	1
6	N53023	Plate - Mounting Bracket (Prior to 2018)	1
7	W-469	Hex Head - 1/4 x 3/4 Lg	8
8	W-512	Hex Nut - 1/4	10
9	W-514	Hex Nut - 3/8	8
10	W-521	Lockwasher - 1/4	10
11	W-523	Lockwasher - 3/8	8
12	W-1847	Hex Bolt - 1/4 x 5	2
13	S-1198	Flatwasher - 5/16 ID x 3/4 OD x 1/16	2

Valve and Control Mount
Version 2 - Prior to 2016

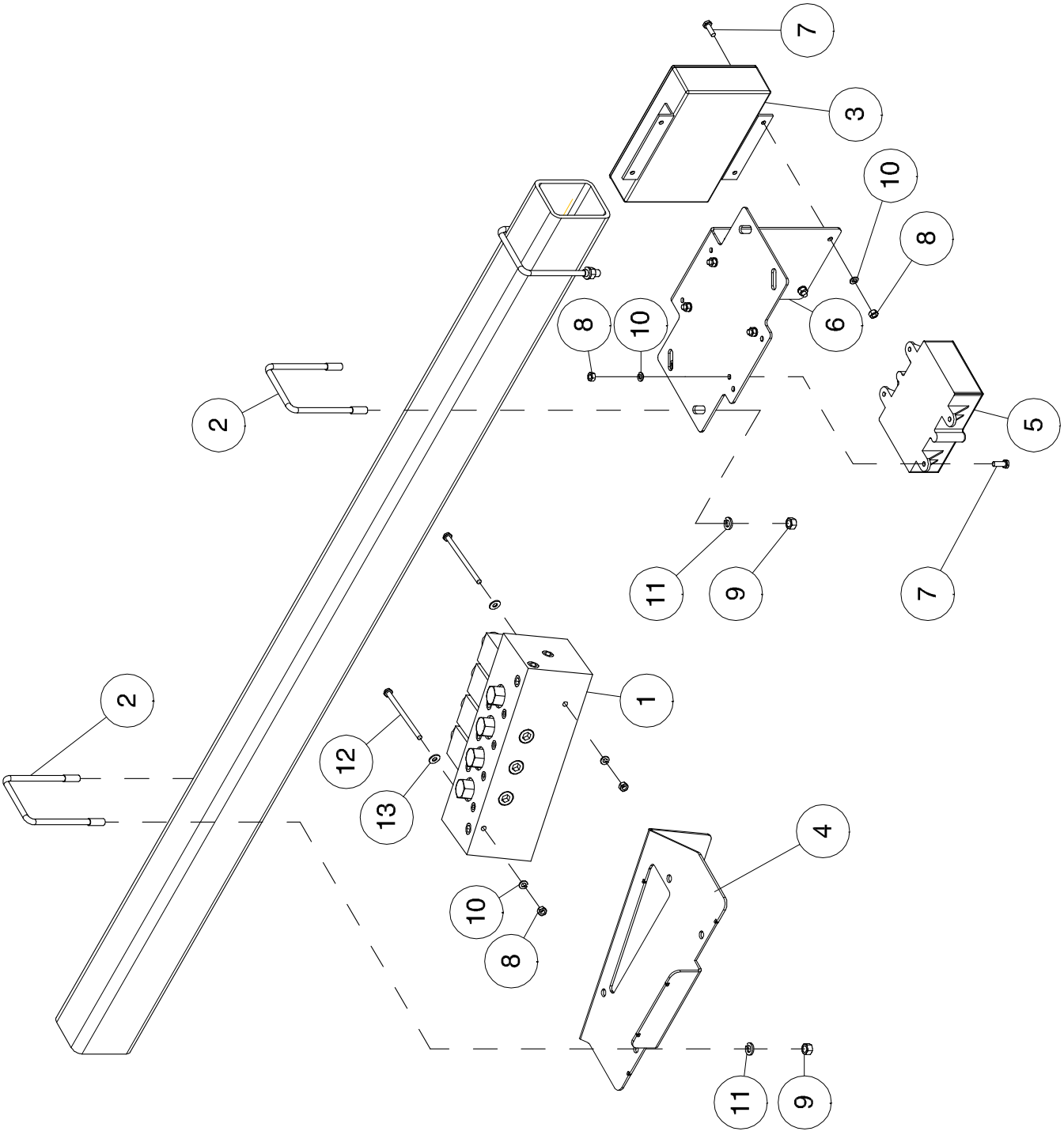

Valve and Control Mount Version 2 - Prior to 2016

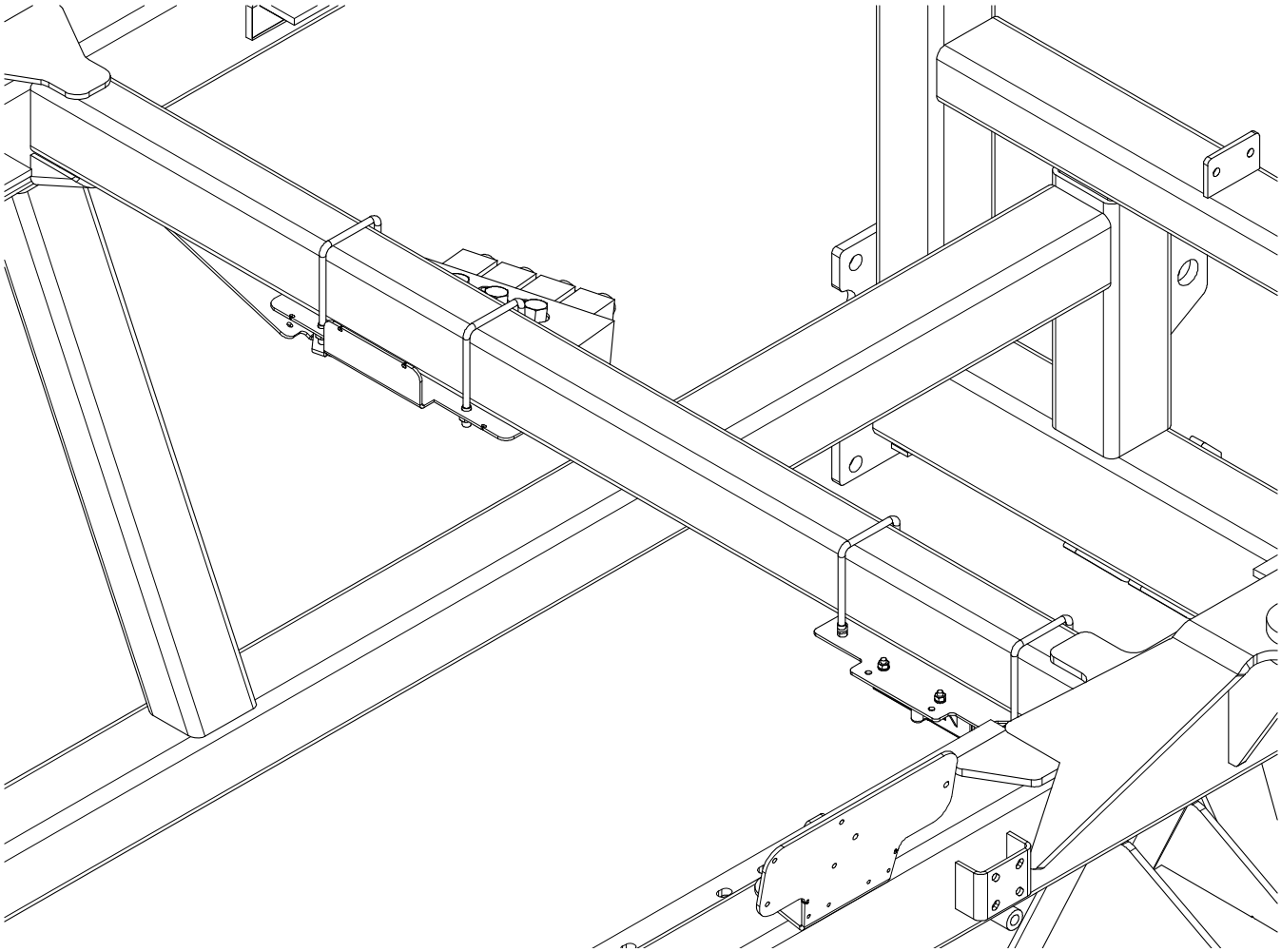

Item	Part No.	Description	Qty
1	N45195	Valve Manifold Assembly	1
2	N49642	U-Bolt - 3/8 x 3 1/16 x 4 15/16 UL - 9365 to 9650	4
	N19723	U-Bolt - 3/8 x 4 1/16 x 6 15/16 UL - 9800 and 91000	4
3	N50622	Multi Drive Electronic Control Unit - 4 Channel	1
4	N53456	Plate - Manifold Mount	1
5	N53020	Control Box - Wireless Auger Remote	1
6	N53498	Universal ECU Plate	1
7	W-469	Hex Head - 1/4 x 3/4 Lg	8
8	W-512	Hex Nut - 1/4	10
9	W-514	Hex Nut - 3/8	8
10	W-521	Lockwasher - 1/4	10
11	W-523	Lockwasher - 3/8	8
12	W-1847	Hex Bolt - 1/4 x 5	2
13	S-1198	Flatwasher - 5/16 ID x 3/4 OD x 1/16	2

Frame
Auger/Conveyor Valve Mount Behind

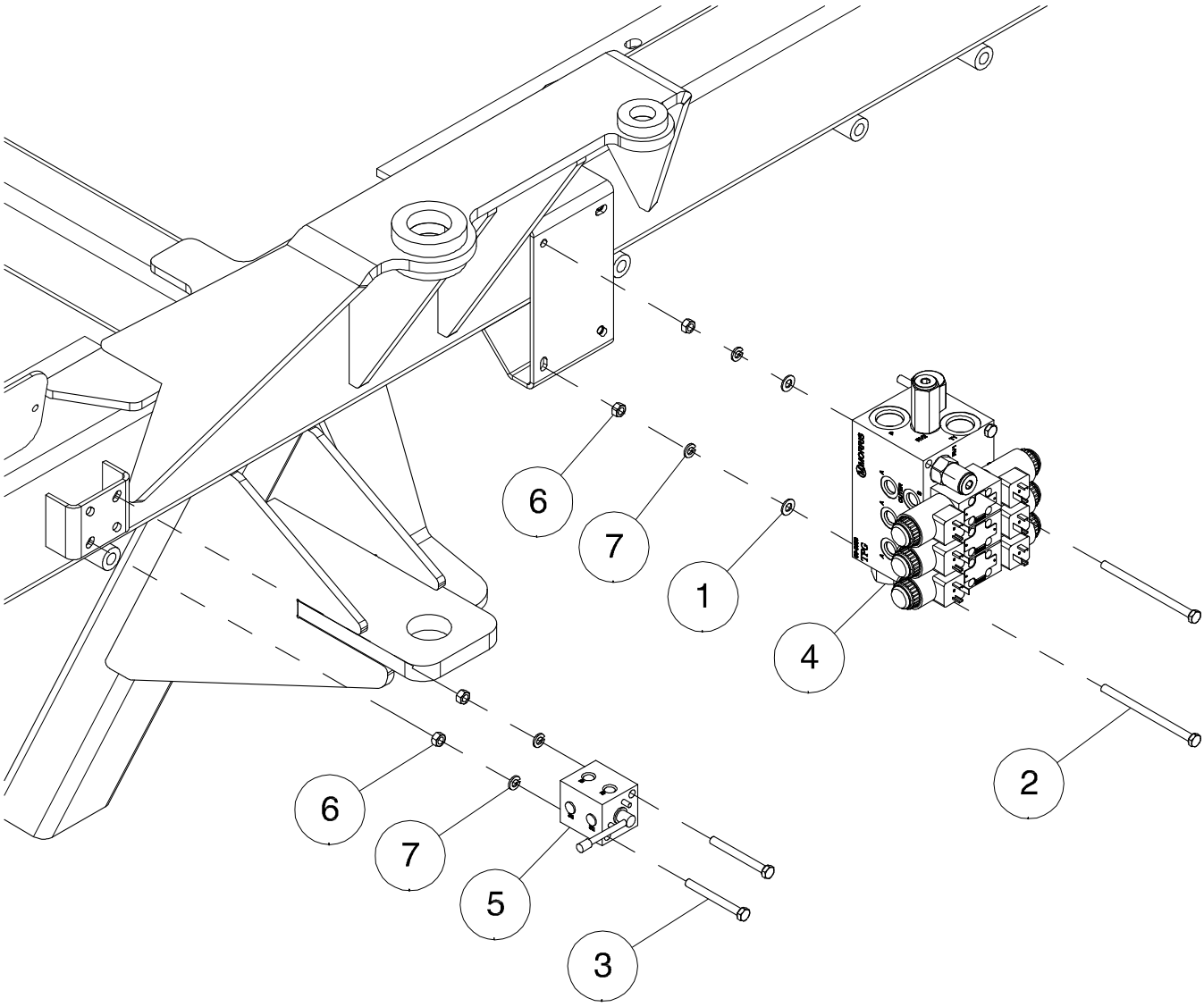

Item	Part No.	Description	Qty
1	D-5488	Washer 11/32 ID x 11/16 OD x 16 Ga	4
2	N15756	Hex Bolt - 5/16 x 5 Lg	4
3	N19459	Hex Bolt - 5/16 x 3 Lg	2
4	N58555	Direction Control Valve	1
5	N49933	Selector Valve - Arm Lock (12" Auger and Conveyor only) (N70860 Repair/Seal Kit) (N60625 Handle/Knob)	1
6	W-513	Hex Nut - 5/16	6
7	W-522	Lockwasher - 5/16	6

Frame
Auger/Conveyor Valve Mount Between

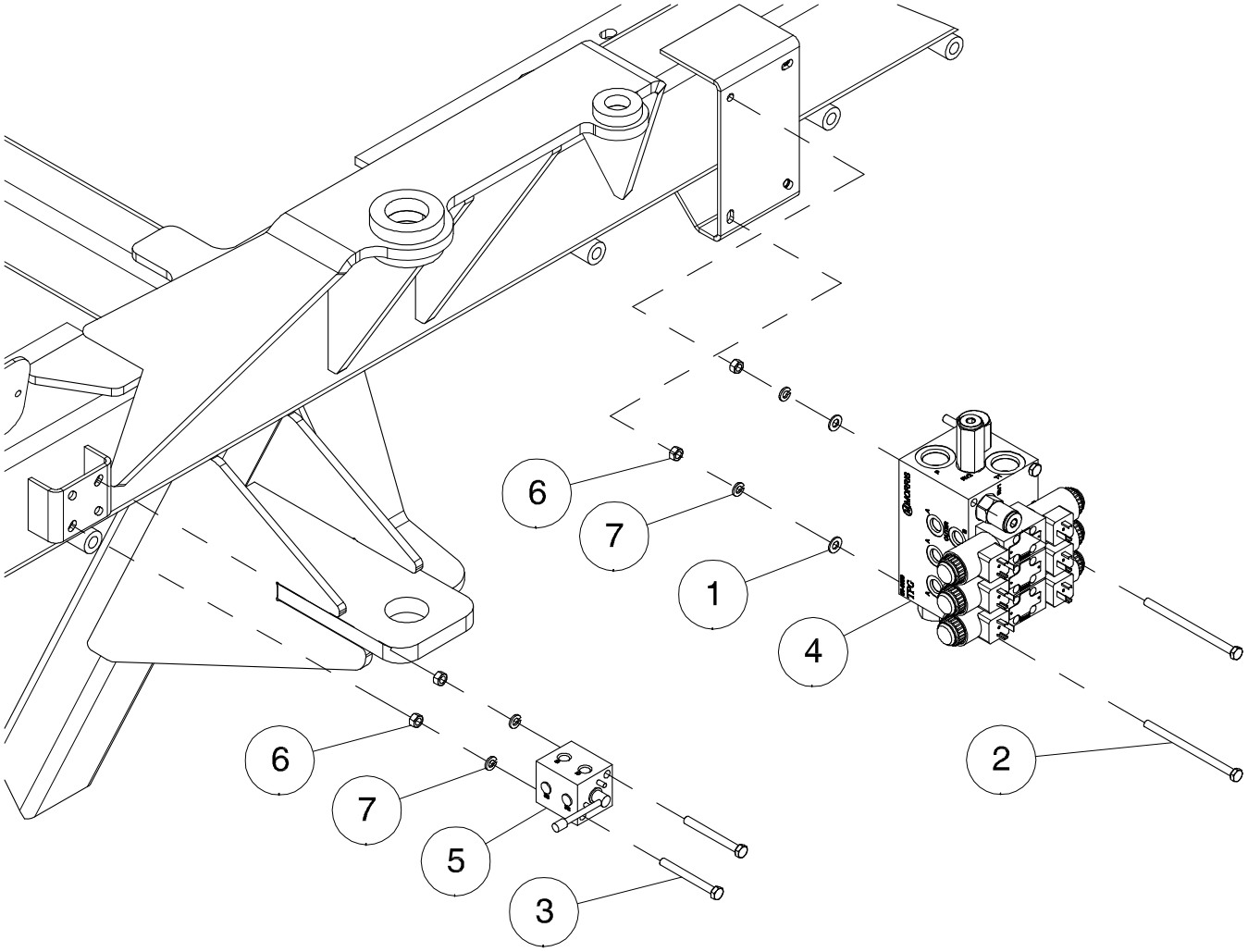

Item	Part No.	Description	Qty
1	D-5488	Washer 11/32 ID x 11/16 OD x 16 Ga	4
2	N15756	Hex Bolt - 5/16 x 5 Lg	4
3	N19459	Hex Bolt - 5/16 x 3 Lg	2
4	N58555	Direction Control Valve	1
5	N49933	Selector Valve - Arm Lock (12" Auger and Conveyor only) (N60625 Handle/Knob) (N70860 Repair/Seal Kit) (N60625 Handle/Knob)	1
6	W-513	Hex Nut - 5/16	6
7	W-522	Lockwasher - 5/16	6

10 Inch Auger Only

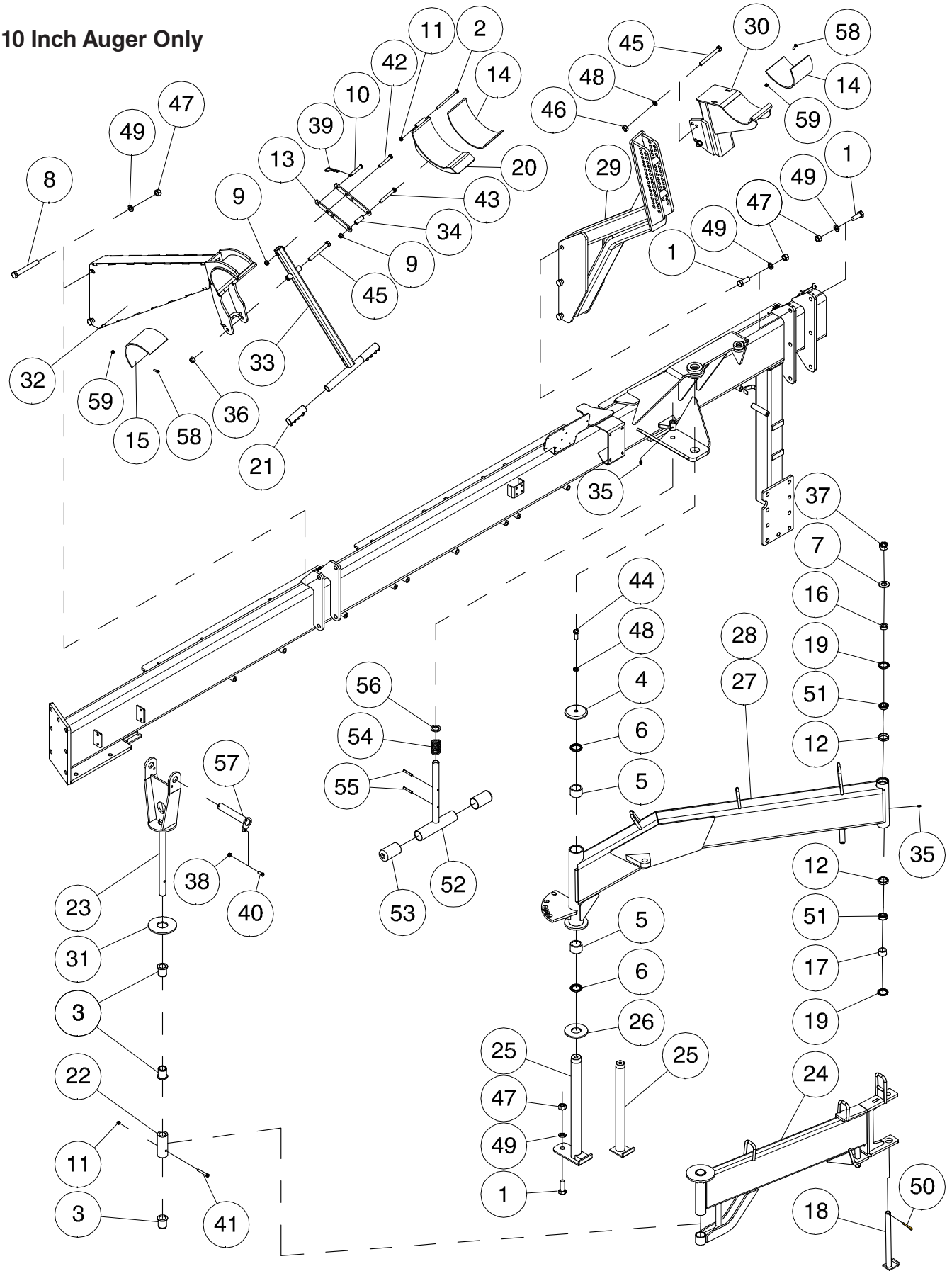

Auger - 10 Inch - Auger Arms - Standard - Prior to 2018			
Item	**Part No.**	**Description**	**Qty**
1	C-695	Hex Bolt - 3/4 x 2 Lg	7
2	C-3664	Hex Bolt - 3/8 x 5-1/2 Lg	1
3	C18510	Bushing - 1.275 ID x 1.625 OD	3
4	C18782	Cap	1
5	C26086	Fiber Bushing - 1-1/2 Lg	2
6	C26266	Dust Seal - 1 3/4 Shaft	2
7	D-5498	Washer - 1-1/16 ID x 2 OD x 11 Ga	1
8	D-5558	Hex Head Bolt - 3/4 x 6 Lg	2
9	F-3405	Locknut - 1/2 Unitorque	2
10	H18242	Pin - 1/2 Dia x 2 21/32 UL	1
11	M-3388	Locknut - 3/8 Unitorque	2
12	N14009	Bearing Cup	2
13	N19736	Link	2
14	N56142	Cradle Pad - 13 Lg	2
15	N56144	Cradle Pad - 10 1/2 Lg	1
16	N37074	Bushing - 1.012 ID x 13/32 Lg	1
17	N37075	Bushing - 1.012 ID x 31/32 Lg	1
18	N37076	Pin - Auger Arm Pivot	1
19	N37077	Dust Seal	2
20	N37720	Cradle Strap	1
21	N39486	Handle Grip - 1 1/4 Dia	2
22	N44742	Collar - 2 OD x 1.264 ID	1
23	N47198	Clevis - Hyd Assist Auger	1
24	N48730	Outer Arm - Auger	1
25	N49146	Pin - Chrome Pivot - Prior to 2016	1
	N51725	Pin - Chrome Pivot - 1 3/4 Dia x 20 5/16 UL - 2016 to Present	1
26	N49147	Wear Plate	1
27	N49349	Inner Arm	1
28	N49459	Inner Arm Assy - (Includes Bearings + Seals)	1
29	N49575	Tower - Rear Cradle	1
30	N49580	Arm - Auger Cradle	1
31	N49950	Wear Pad	1
32	N53043	Auger Cradle - Front	1
33	N53058	Cradle Lock Handle	1
34	N53214	Bushing - .531 ID x 3/4 OD x 1 7/8 Lg	1
35	S-752	Grease Zerk - 1/4	2
36	S-1197	Locknut - 5/8 Unitorque	1
37	S-1311	Hex Slotted Nut - 1-14 UNS	1
38	S27987	Flange Lock Nut - 3/8 W/Center Lock	1
39	W-131	Hairpin - 5/32	1
40	W-475	Hex Bolt - 3/8 x 1 Lg	1
41	W-480	Hex Bolt - 3/8 x 2 1/2 Lg	1
42	W-492	Hex Bolt - 1/2 x 3 Lg	1
43	W-494	Hex Bolt - 1/2 x 3 3/4 Lg	1
44	W-497	Hex Bolt - 5/8 x 1-1/2 Lg	1
45	W-506	Hex Bolt - 5/8 x 5 Lg	3
46	W-517	Hex Nut - 5/8	2
47	W-518	Hex Nut - 3/4	9
48	W-526	Lockwasher - 5/8	3
49	W-527	Lockwasher - 3/4	9
50	W-1416	Cotter Pin - 3/16 x 1 1/2 Lg	1
51	W-4187	Bearing Cone	2
52	N51265	Lock Pin - 8 - 5/16 Lg	2
53	N37049	Round Grip	4
54	N37638	Spring	2
55	C-1124	Roll Pin - 7/32 x 1 3/8	4
56	S39559	Washer - 25/32 ID x 1 3/16 OD x 12 Ga	3
57	N36830	Auger Pivot Pin	1
58	C32741	Capscrew - 1/4 x 1 Lg	12
59	N15757	Locknut - 1/4 Unitorque	12

Auger - 10 Inch
Auger Arms Assembly - Standard - 2018 to Present

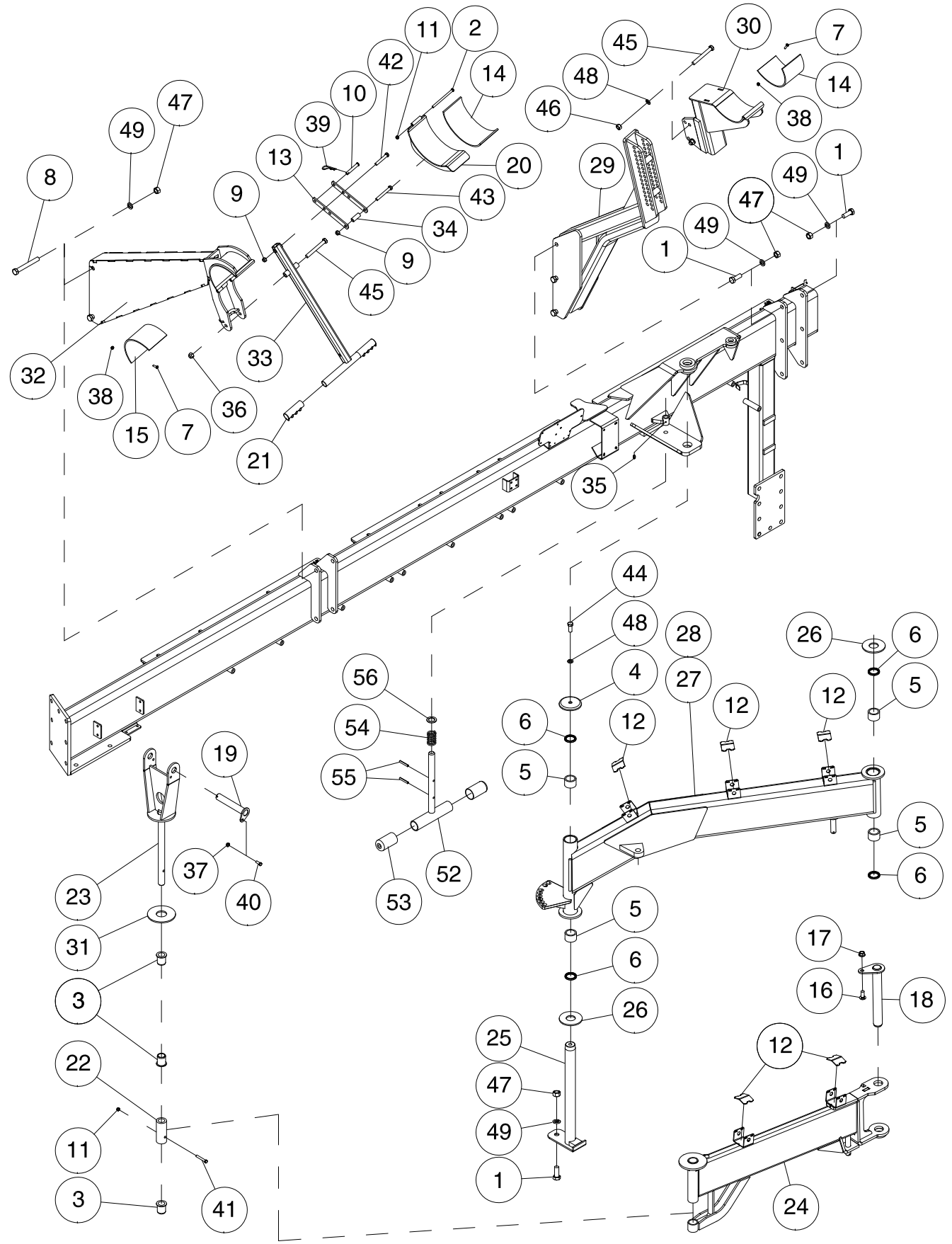

Auger - 10 Inch - Auger Arms - Standard - 2018 to Present

Item	Part No.	Description	Qty
1	C-695	Hex Bolt - 3/4 x 2 Lg	7
2	C-3664	Hex Bolt - 3/8 x 5-1/2 Lg	1
3	C18510	Bushing - 1.275 ID x 1.625 OD	3
4	C18782	Cap	1
5	C26086	Fiber Bushing - 1-1/2 Lg	4
6	C26266	Dust Seal - 1 3/4 Shaft	4
7	C32741	Capscrew - 1/4 x 1 Lg	12
8	D-5558	Hex Head Bolt - 3/4 x 6 Lg	2
9	F-3405	Locknut - 1/2 Unitorque	2
10	H18242	Pin - 1/2 Dia x 2 21/32 UL	1
11	M-3388	Locknut - 3/8 Unitorque	2
12	N60937	Hose Holder Clamp	5
13	N19736	Link	2
14	N56142	Cradle Pad - 13 Lg	2
15	N56144	Cradle Pad - 10 1/2 Lg	1
16	D17665	Carriage Bolt - 5/8 x 1 1/4 Lg	1
17	W14434	Locknut - 5/8 Serrated	1
18	N55704	Pin - Auger Arm Pivot - 1 3/4 Dia x 13 7/16 UL	1
19	N36830	Auger Pivot Pin	1
20	N37720	Cradle Strap	1
21	N39486	Handle Grip - 1 1/4 Dia	2
22	N44742	Collar - 2 OD x 1.264 ID	1
23	N47198	Clevis - Hyd Assist Auger	1
24	N48730	Outer Arm - Auger	1
25	N51725	Pin - Chrome Pivot - 1 3/4 Dia x 20 5/16 UL	1
26	N49147	Wear Plate - 1 13/16 ID x 4 1/2 OD x 1/4 Thick	2
27	N71345	Inner Arm	1
28	N71350	Inner Arm Assembly - (Includes Bushings + Seals)	1
29	N49575	Tower - Rear Cradle	1
30	N49580	Arm - Auger Cradle	1
31	N49950	Wear Pad - 2.062 ID x 5 1/2 OD x 1/4 Thick	1
32	N53043	Auger Cradle - Front	1
33	N53058	Cradle Lock Handle	1
34	N53214	Bushing - .531 ID x 3/4 OD x 1 7/8 Lg	1
35	S-752	Grease Zerk - 1/4	1
36	S-1197	Locknut - 5/8 Unitorque	1
37	S27987	Lock Nut - 3/8 Flange Center Lock	1
38	N15757	Locknut - 1/4 Unitorque	12
39	W-131	Hairpin - 5/32	1
40	W-475	Hex Bolt - 3/8 x 1 Lg	1
41	W-480	Hex Bolt - 3/8 x 2 1/2 Lg	1
42	W-492	Hex Bolt - 1/2 x 3 Lg	1
43	W-494	Hex Bolt - 1/2 x 3 3/4 Lg	1
44	W-497	Hex Bolt - 5/8 x 1-1/2 Lg	1
45	W-506	Hex Bolt - 5/8 x 5 Lg	3
46	W-517	Hex Nut - 5/8	2
47	W-518	Hex Nut - 3/4	9
48	W-526	Lockwasher - 5/8	3
49	W-527	Lockwasher - 3/4	9
50	W-1416	Cotter Pin - 3/16 x 1 1/2 Lg	1
51	* * * * *		
52	N51265	Lock Pin - 8 - 5/16 Lg	2
53	N37049	Round Grip	4
54	N37638	Spring	2
55	C-1124	Roll Pin - 7/32 x 1 3/8	4
56	S39559	Washer - 25/32 ID x 1 3/16 OD x 12 Ga	3

Auger - 10 Inch
Optional Outer Arm Lock Kit - N53934

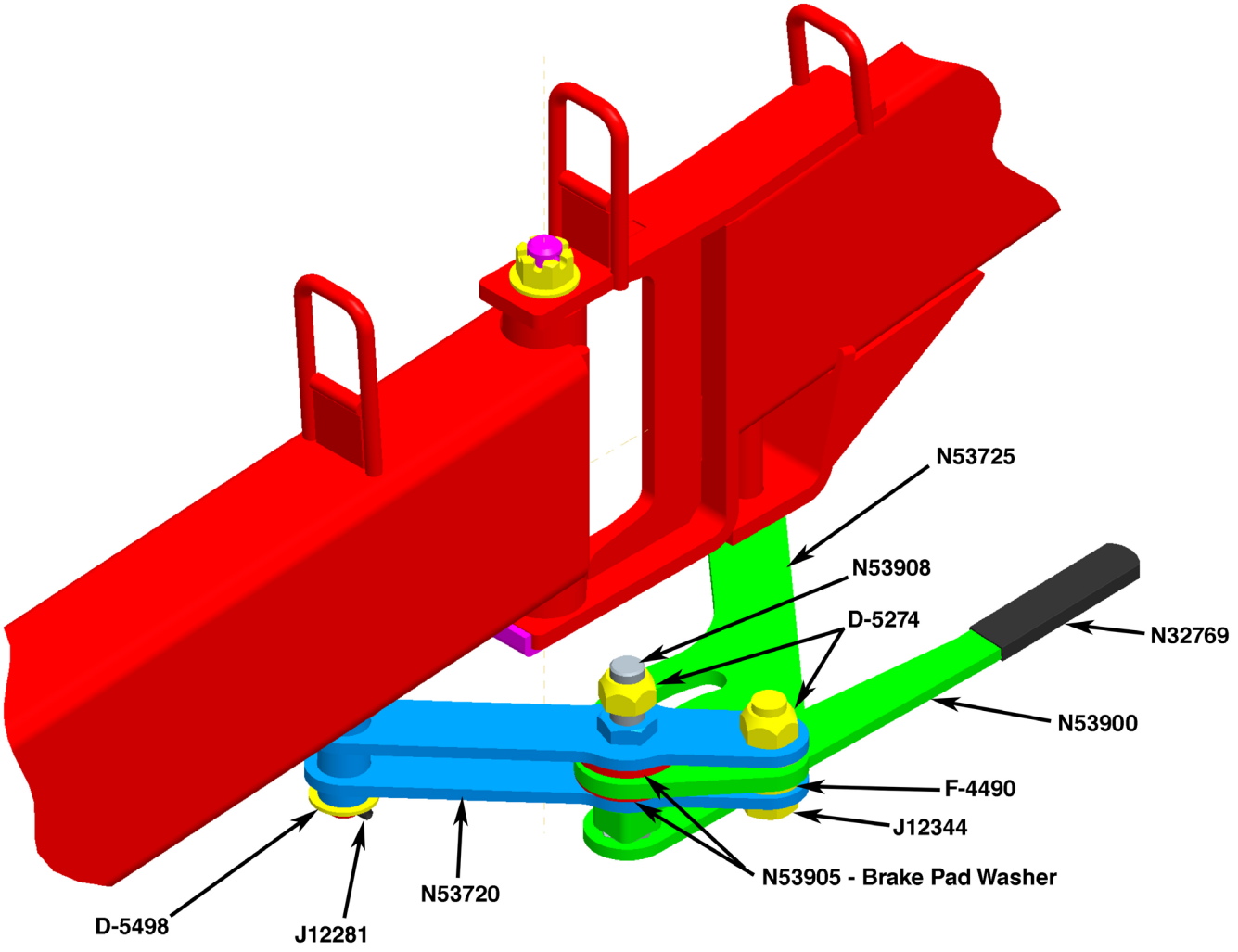



Auger - 10 Inch - Optional Outer Arm Lock Kit - N53934

Item	Part No.	Description	Qty
1	N53725	Outer Arm Brake Plate	1
2	N53720	Outer Arm Brake Strap	1
3	N53900	Auger Arm Brake Handle	1
4	N32769	Handle Cover	1
5	N53908	Lock Bolt - 1 x 5 1/2 Lg	1
6	N53905	Brake Pad Washer - 1 1/32 ID x 3 OD x 1/4 Thick	2
7	D-5498	Washer - 1 1/32 ID x 2 OD x 11 GA Thick	2
8	F-4490	Washer - Spacer - 1 1/32 ID x 1 7/8 OD x 1/4 Thick	1
9	J12344	Hex Bolt - 1 x 3 Lg	1
10	J12281	Spring Pin - 5/16 x 2 Lg	2
11	D-5274	Locknut - 1 Unitorque	2

10 Inch Auger Only

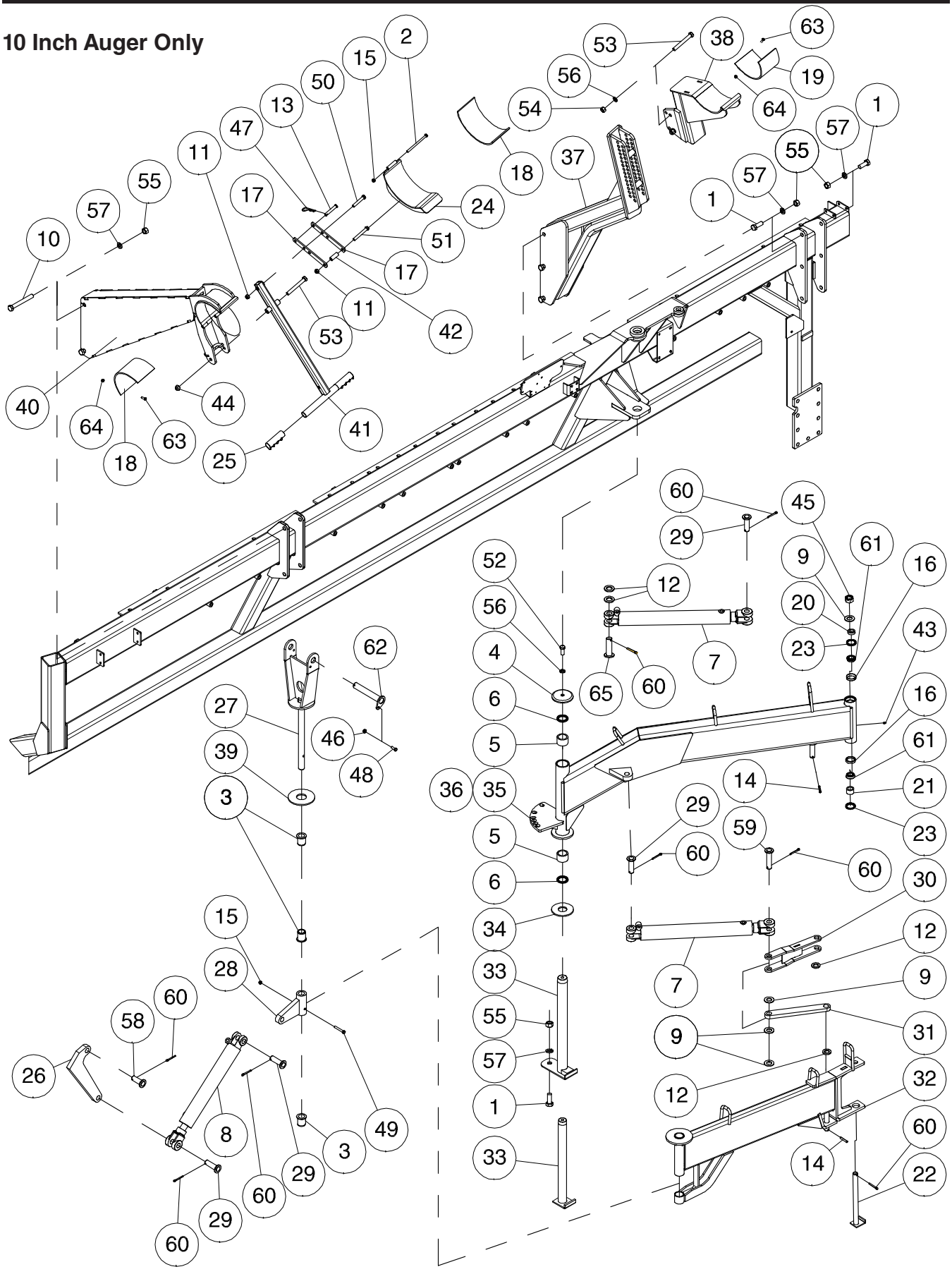

Auger - 10 Inch - Auger Arms with Hydrualic Assist - Prior To 2018			
Item	**Part No.**	**Description**	**Qty**
1	C-695	Hex Bolt - 3/4 x 2 Lg	7
2	C-3664	Hex Bolt - 3/8 x 5-1/2 Lg	1
3	C18510	Bushing - 1.275 ID x 1.625 OD	3
4	C18782	Cap	1
5	C26086	Fiber Bushing - 1-1/2 Lg	2
6	C26266	Dust Seal - 1 3/4 Shaft	2
7	C47188	Cylinder - 2-1/2 x 18 Stroke W 1-1/4 Shaft (Seal Kit C51992)	2
8	C47335	Cylinder - 2-1/2 x 14 Stroke W 1-1/8 Shaft (Seal Kit C51993)	1
9	D-5498	Washer - 1-1/16 ID x 2 OD x 11 Ga	4
10	D-5558	Hex Head Bolt - 3/4 x 6 Lg	2
11	F-3405	Locknut - 1/2 Unitorque	2
12	F-3515	Washer - 1-3/4 OD x 1-1/32 ID x 3/16	4
13	H18242	Pin - 1/2 Dia x 2 21/32 UL	1
14	J12281	Spring Pin - 5/16 x 2 Lg	2
15	M-3388	Locknut - 3/8 Unitorque	2
16	N14009	Bearing Cup	2
17	N19736	Link	2
18	N56142	Cradle Pad - 13 Lg	2
19	N56144	Cradle Pad - 10 1/2 Lg	1
20	N37074	Bushing - 1.012 ID x 13/32 Lg	1
21	N37075	Bushing - 1.012 ID x 31/32 Lg	1
22	N37076	Pin - Auger Arm Pivot	1
23	N37077	Dust Seal	2
24	N37720	Cradle Strap	1
25	N39486	Handle Grip - 1 1/4 Dia	2
26	N45848	Floating Lug	1
27	N47198	Clevis - Hyd Assist Auger	1
28	N47333	Mtg Brkt - Auger Cylinder	1
29	N47700	Pin - 1 Dia x 2-7/8 UL	5
30	N48728	Link Strap - Inner	1
31	N48729	Link Strap - Outer	1
32		Outer Arm - Auger	1
33	N49146	Pin - Chrome - 1 3/4 Dia x 20 5/16 UL - Prior to 2016	1
	N51725	Pin - Chrome - 1 3/4 Dia x 20 5/16 UL - 2016 to Present	1
34	N49147	Wear Plate	1
35		Inner Arm	1
36		Inner Arm Assembly	1
37	N49575	Tower - Rear Cradle	1
38	N49580	Arm - Auger Cradle	1
39	N49950	Wear Pad	1
40	N53043	Auger Cradle - Front	1
41	N53058	Cradle Lock Handle	1
42	N53214	Bushing - .531 ID x 3/4 OD x 1 7/8 Lg	1
43	S-752	Grease Zerk - 1/4	1
44	S-1197	Locknut - 5/8 Unitorque	1
45	S-1311	Hex Slotted Nut - 1-14 Uns	1
46	S27987	Flange Lock Nut - 3/8 W/Center Lock	1
47	W-131	Hairpin - 5/32	1
48	W-475	Hex Bolt - 3/8 x 1 Lg	1
49	W-480	Hex Bolt - 3/8 x 2 1/2 Lg	1
50	W-492	Hex Bolt - 1/2 x 3 Lg	1
51	W-494	Hex Bolt - 1/2 x 3 3/4 Lg	1
52	W-497	Hex Bolt - 5/8 x 1-1/2 Lg112	1
53	W-506	Hex Bolt - 5/8 x 5 Lg	3
54	W-517	Hex Nut - 5/8	2
55	W-518	Hex Nut - 3/4	9
56	W-526	Lockwasher - 5/8	3
57	W-527	Lockwasher - 3/4	9
58	W-558	Pin - 1 Dia x 2-1/4 UL	1
59	W-1628	Pin - 1 Dia x 3-3/4 UL	1
60	W-4181	Cotter Pin - 1/4 x 2 Lg	8
61	W-4187	Bearing Cone	2
62	N36830	Auger Pivot Pin	1
63	C32741	Capscrew - 1/4 x 1 Lg	12
64	N15757	Locknut - 1/4 Unitorque	12
65	C-1429	Pin - 1 Dia x 3-3/8 UL	1

10 Inch Auger Only

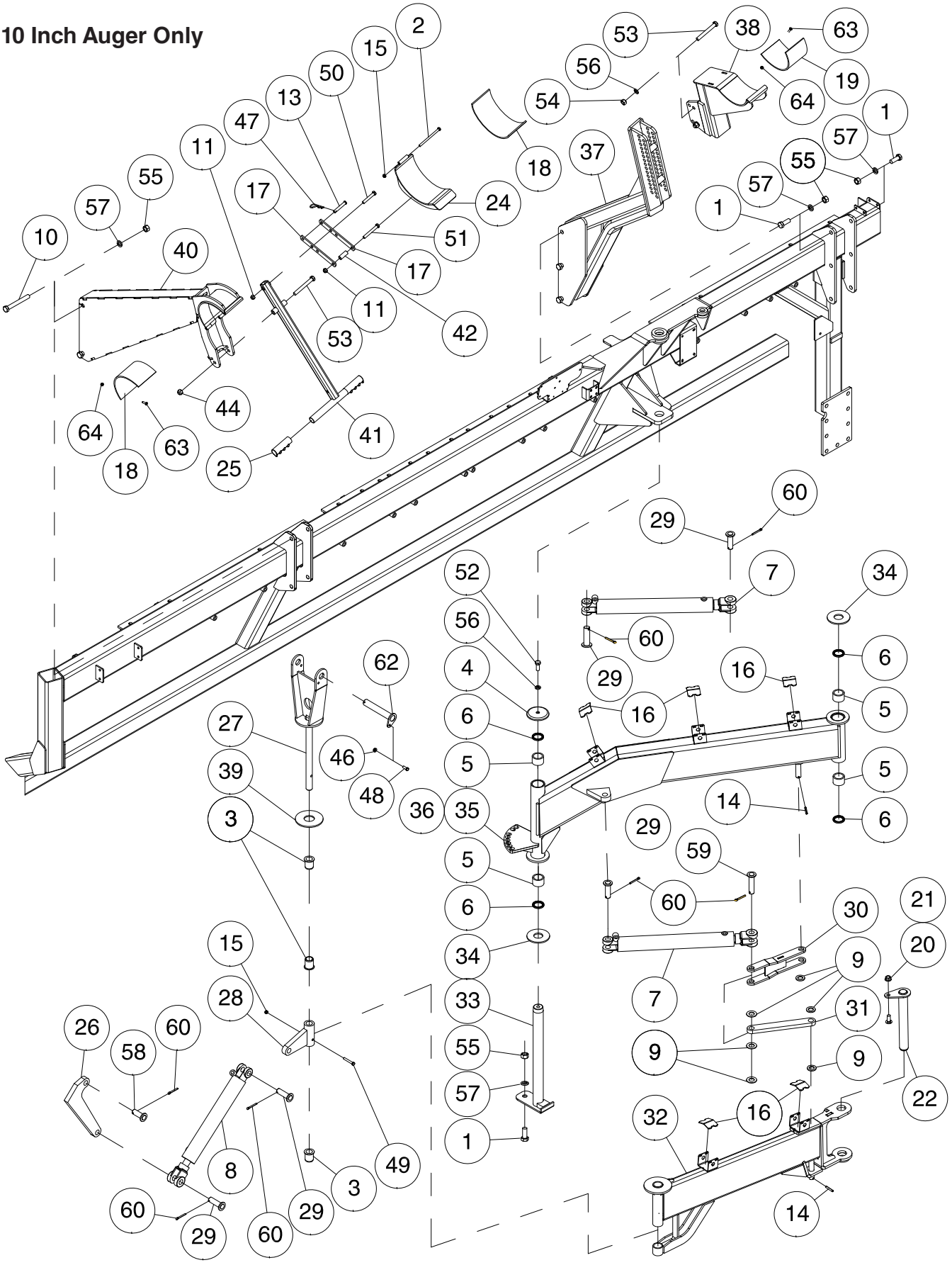

Auger - 10 Inch - Auger Arms with Hydrualic Assist - 2018 to Present

Item	Part No.	Description	Qty
1	C-695	Hex Bolt - 3/4 x 2 Lg	7
2	C-3664	Hex Bolt - 3/8 x 5-1/2 Lg	1
3	C18510	Bushing - 1.275 ID x 1.625 OD	3
4	C18782	Cap	1
5	C26086	Fiber Bushing - 1-1/2 Lg	2
6	C26266	Dust Seal - 1 3/4 Shaft	2
7	C47188	Cylinder - 2-1/2 x 18 Stroke W 1-1/4 Shaft (Seal Kit C51992)	2
8	C47335	Cylinder - 2-1/2 x 14 Stroke W 1-1/8 Shaft (Seal Kit C51993)	1
9	D-5498	Washer - 1-1/16 ID x 2 OD x 11 Ga	7
10	D-5558	Hex Head Bolt - 3/4 x 6 Lg	2
11	F-3405	Locknut - 1/2 Unitorque	2
12			
13	H18242	Pin - 1/2 Dia x 2 21/32 UL	1
14	J12281	Spring Pin - 5/16 x 2 Lg	2
15	M-3388	Locknut - 3/8 Unitorque	2
16	N60937	Hose Holder Clamp	5
17	N19736	Link	2
18	N56142	Cradle Pad - 13 Lg	2
19	N56144	Cradle Pad - 10 1/2 Lg	1
20	D17665	Carriage Bolt - 5/8 x 1 1/4 Lg	1
21	W14434	Locknut - 5/8 Serrated	1
22	N55704	Pin - Auger Arm Pivot - 1 3/4 Dia x 13 7/16 UL	1
23	* * * * *		
24	N37720	Cradle Strap	1
25	N39486	Handle Grip - 1 1/4 Dia	2
26	N45848	Floating Lug	1
27	N47198	Clevis - Hyd Assist Auger	1
28	N47333	Mtg Brkt - Auger Cylinder	1
29	N47700	Pin - 1 Dia x 2-7/8 UL	5
30	N48728	Link Strap - Inner	1
31	N48729	Link Strap - Outer	1
32	N48730	Outer Arm - Auger	1
33	N51725	Pin - Chrome - 1 3/4 Dia x 20 5/16 UL	1
34	N49147	Wear Plate - 1 13/16 ID x 4 1/2 OD x 1/4 Thick	2
35	N49349	Inner Arm	1
36	N49459	Inner Arm Assembly - (Includes Bushings + Seals)	1
37	N49575	Tower - Rear Cradle	1
38	N49580	Arm - Auger Cradle	1
39	N49950	Wear Pad - 2.062 ID x 5 1/2 OD x 1/4 Thick	1
40	N53043	Auger Cradle - Front	1
41	N53058	Cradle Lock Handle	1
42	N53214	Bushing - .531 ID x 3/4 OD x 1 7/8 Lg	1
43	* * * * *		
44	S-1197	Locknut - 5/8 Unitorque	1
45	* * * * *		
46	S27987	Flange Lock Nut - 3/8 W/Center Lock	1
47	W-131	Hairpin - 5/32	1
48	W-475	Hex Bolt - 3/8 x 1 Lg	1
49	W-480	Hex Bolt - 3/8 x 2 1/2 Lg	1
50	W-492	Hex Bolt - 1/2 x 3 Lg	1
51	W-494	Hex Bolt - 1/2 x 3 3/4 Lg	1
52	W-497	Hex Bolt - 5/8 x 1-1/2 Lg112	1
53	W-506	Hex Bolt - 5/8 x 5 Lg	3
54	W-517	Hex Nut - 5/8	2
55	W-518	Hex Nut - 3/4	9
56	W-526	Lockwasher - 5/8	3
57	W-527	Lockwasher - 3/4	9
58	W-558	Pin - 1 Dia x 2-1/4 UL	1
59	W-1628	Pin - 1 Dia x 3-3/4 UL	1
60	W-4181	Cotter Pin - 1/4 x 2 Lg	8
61	* * * * *		
62	N36830	Auger Pivot Pin	1
63	C32741	Capscrew - 1/4 x 1 Lg	12
64	N15757	Locknut - 1/4 Unitorque	12

Auger - 10 Inch
10" Auger Assembly

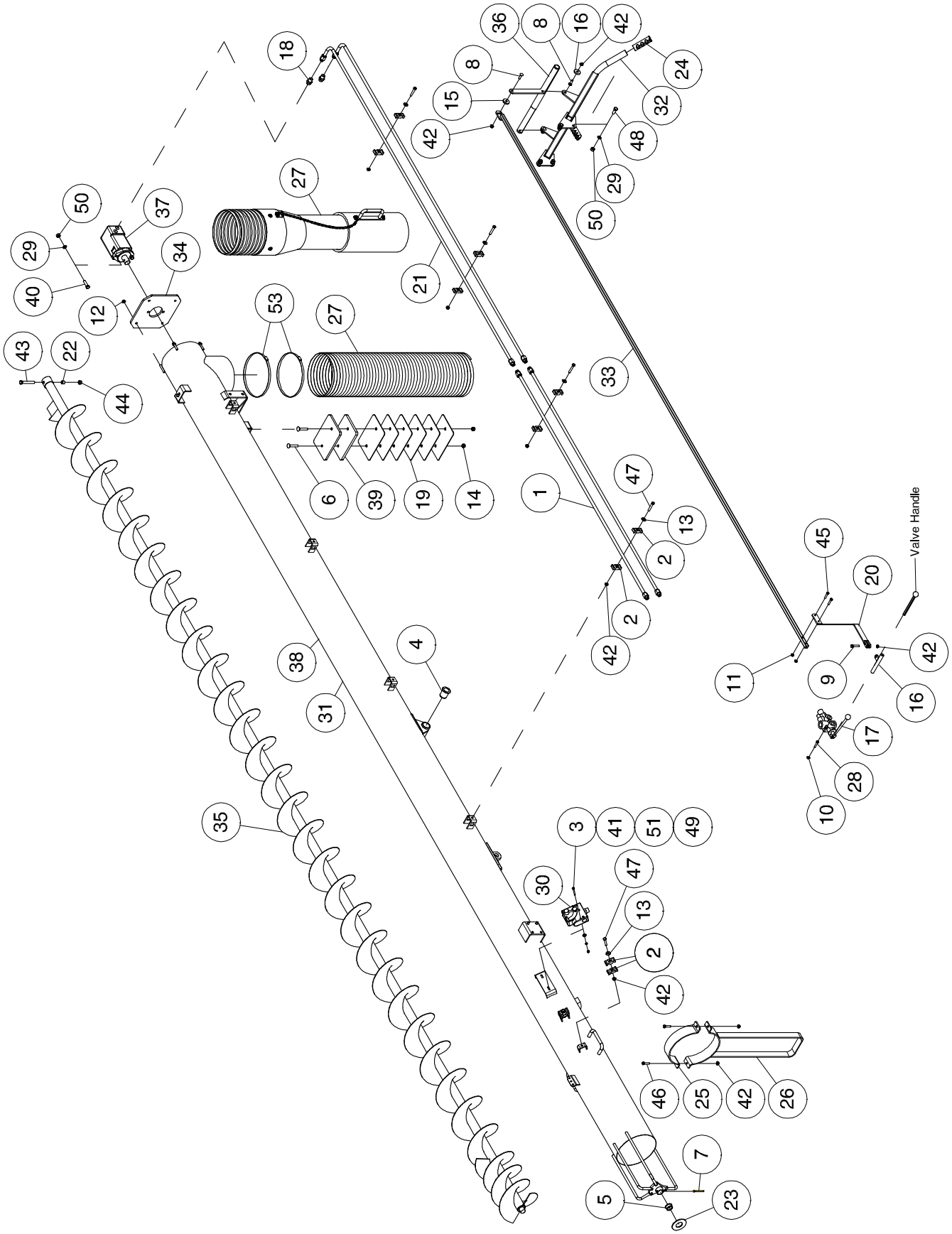

Auger - 10 Inch - 10" Auger Assembly

Item	Part No.	Description	Qty
1	C-4366	Hydraulic Tube	2
2	C-4698	Oil Line Clamp	12
3	C15319	Hex Bolt - 1/4 x 2 1/2 Lg - Extended Hopper only	2
4	C18510	Bushing - 1.275 ID x 1.625 OD	2
5	C22785	Bushing - 1.148 ID x 1.385 OD	1
6	C29193	Carriage Bolt - 1/2 x 2-1/2 Lg	2
7	D-5239	Cotter Pin - 1/4 x 2 1/4 Lg	1
8	D-5260	Carriage Bolt - 3/8 x 1-1/2 Lg	3
9	W-187	Hex Bolt - 3/8 x 1 1/4 Lg	1
10	D-5277	Flange Lock Nut - 1/4 Serrated	3
11	D-5278	Flange Lock Nut - 5/16	2
12	D-5279	Flange Lock Nut - 3/8 Serrated	4
13	D-5579	Washer - 13/32 ID x 1 OD x 16 GA	6
14	F-3405	Locknut - 1/2 Unitorque	2
15	N21266	Wear Washer - 1/4	3
16	N53220	Handle Control	1
17	N53205	Control Valve (Seal Kit N55676) (N55677 Valve Handle)	1
18	N34505	Connector - 10 MJIC x10 MORB	2
19	N36370	Counter Weight Plate - Standard Auger Only	6
20	N53222	Link Strap - 17 1/2 Lg x 6 1/8 offset	1
21	N36498	Hydraulic Tube	2
22	N36914	Bushing - 3/4 OD x .510 ID	1
23	N37737	Washer - 1.645 ID x 3 1/2 OD	1
24	N39486	Handle Grip - 1 1/4 Dia	2
25	N40867	Auger Handle Clamp - Top Half	1
26	N53230	Auger Handle Clamp - Bottom Half	1
27	N47343	Spout - 10 Dia x 41 coils - 2014 to present	1
	N42279	Spout, Adjustable - Prior to 2014	1
28	N36128	Hex Bolt - 1/4 x 1 1/2 Lg	3
29	W-525	Lockwasher - 1/2	6
30	N51985	Flow Control Valve - Extended Hopper only	1
31	N49310	Auger Tube - 10"	1
32	N49570	Auger Grab Bar	1
33	N49573	Auger Control Rod - 174 Slot center to Rod end	1
34	N49884	Auger Motor Mounting Plate	1
35	N49885	10" Flighting	1
36	N49940	Control Handle - Auger	1
37	N66479	Hydraulic Motor - 160cc - 3000PSI - 20GPM - 2019 to present (Seal Kit N56145)	1
	N49946	Hydraulic Motor - 202cc - 3000PSI - 20GPM - Prior to 2019 (Seal Kit N56145)	
38	N49947	Auger Assembly - 10" Dia	1
39	N51270	Plate - Thick Counter Weight - Standard Auger Only	2
40	S-1189	Hex Bolt - 1/2 x 1 3/4 Lg	2
41	S-1198	Washer - 5/16 ID x 3/4 OD x .065 - Extended Hopper only	2
42	S27987	Flange Lock Nut - 3/8 W/Center Lock	12
43	S33883	Hex Bolt - 1/2 x 3 1/2 Lg GR8	1
44	S47110	Hex Nut - 1/2 Center Lock	1
45	W-473	Hex Bolt - 5/16 x 1 1/2 Lg	2
46	W-477	Hex Bolt - 3/8 x 1 1/2 Lg	2
47	W-479	Hex Bolt - 3/8 x 2 1/4 Lg	6
48	W-485	Hex Bolt - 1/2 x 1 1/4 Lg	4
49	W-512	Hex Nut - 1/4 - Extended Hopper only	2
50	W-516	Hex Nut - 1/2	6
51	W-521	Lockwasher - 1/4 - Extended Hopper only	2
52	W-523	Lockwasher - 3/8	4
53	N36447	Hose Clamp - 10 3/4 Dia stainless	2

Auger - 10 Inch
Auger Spout - Prior to 2014

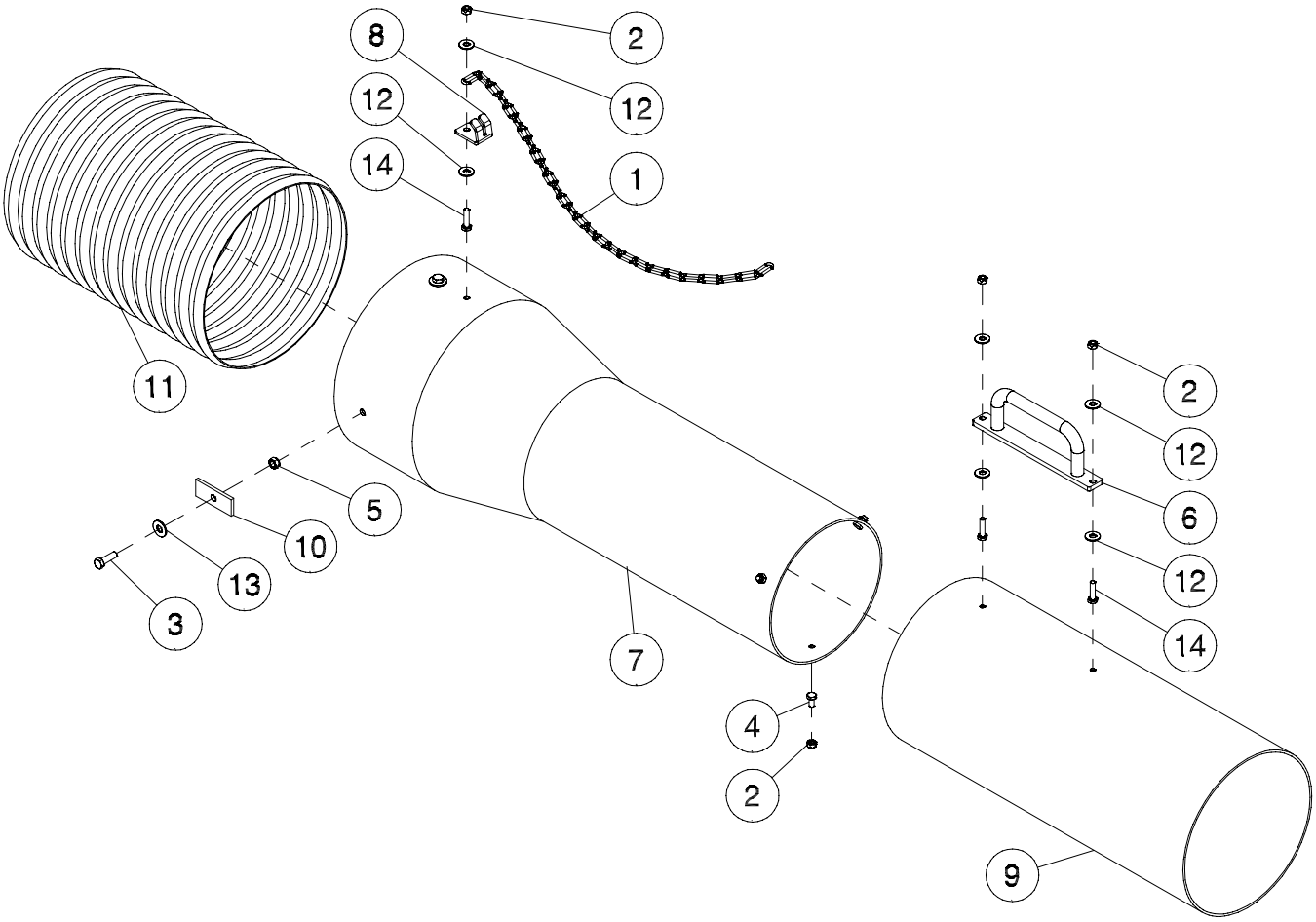

Item	Part No.	Description	Qty
1	N42267	Chain	1
2	N22778	Locknut - 1/4 Nylon Insert	6
3	N29048	Hex Bolt - 5/16 x 1 Lg	4
4	N36556	Hex Bolt - 1/4 x 1/2 Lg	3
5	N42098	Locknut 5/16 Nylon Insert	4
6	N42263	Grab Handle	1
7	N42264	Auger Spout	1
8	N42266	Chain Holder	1
9	N42273	Auger Spout Extention	1
10	N42276	Plate	4
11	N42278	Auger Spout	1
12	S-1198	Washer - 5/16 ID x 3/4 OD x .065	6
13	S-1199	Washer - 3/8 ID x 7/8 OD x 14 Ga	4
14	W-1552	Hex Bolt - 1/4 x 1 Lg	3
	N42279	Spout Assembly	1

Auger - 10 Inch
Auger Hopper - Standard

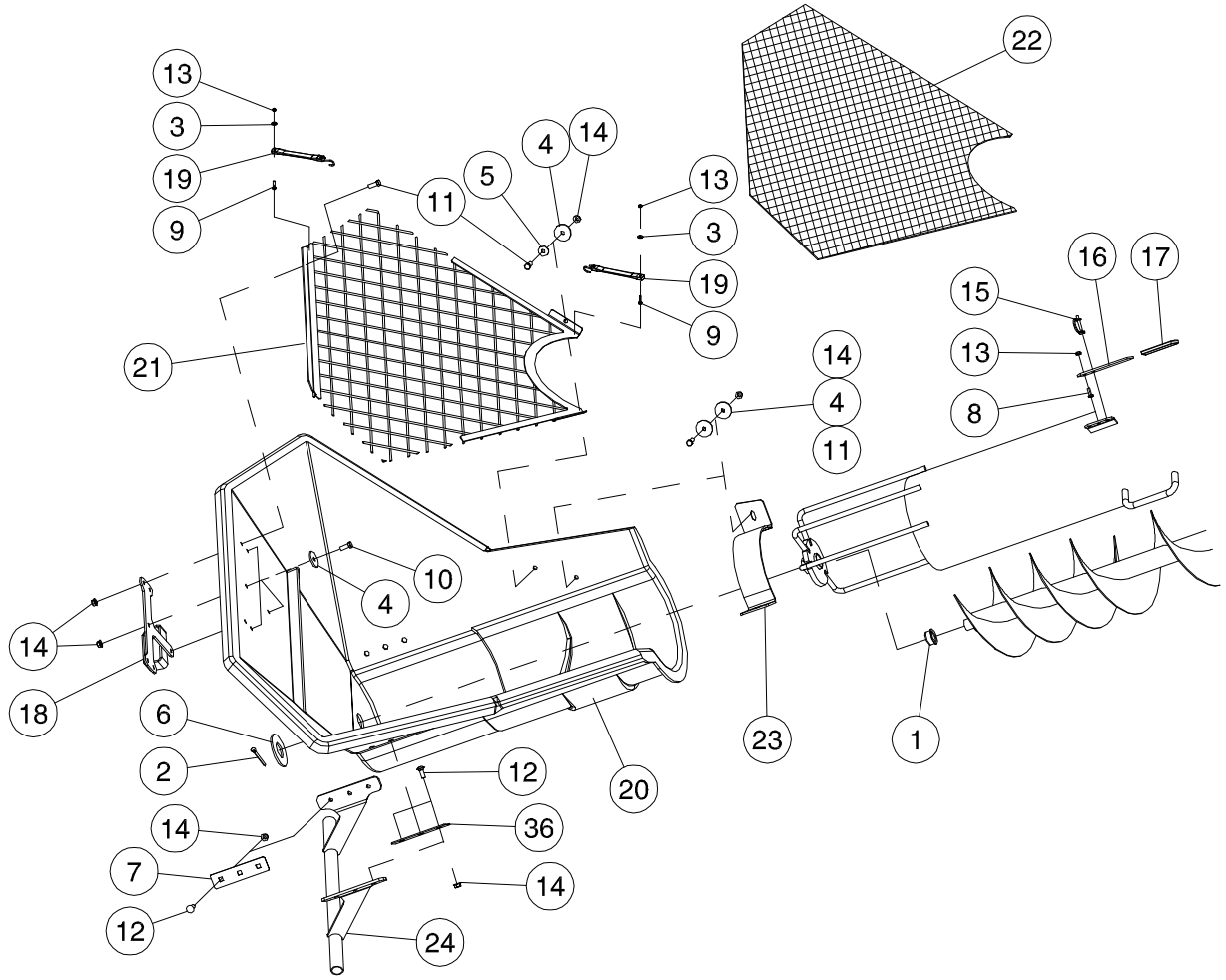

Item	Part No.	Description	Qty
1	C22785	Bushing Upper	1
2	D-5239	Cotter Pin - 1/4 x 2 1/4 Lg	1
3	S-1198	Flat Washer - 5/16 ID x 3/4 OD x 1/16 Thick	4
4	W14504	Washer - 13/32 ID x 1 3/4 OD x 10 Ga	8
5	D-5579	Flatwasher - 13/32 ID x 1 OD x 16 Ga	2
6	N37737	Washer - 1.645 ID x 3 1/2 OD x 3/16 Thick	1
7	N40737	Washer Plate	2
8	W-469	Hex Bolt - 1/4 x 3/4 Lg	1
9	W-1552	Hex Bolt - 1/4 x 1 Lg	4
10	W-475	Hex Bolt - 3/8 x 1 Lg	4
11	W-187	Hex Bolt - 3/8 x 1 1/4 Lg	6
12	P7C616	Carriage Bolt - 3/8 x 1 Lg	6
13	N22778	Locknut - 1/4 Nylon Insert	5
14	S27987	Locknut - 3/8 Flanged Center Lock	16
15	N40727	Safety Snap Pin	1
16	N40726	Transport Lug	1
17	N37483	Handle Grip	1
18	N36372	Hopper Handle	1
19	N19563	Tie down Strap - 10" Rubber	4
20	N40660	Auger Hopper	1
21	N51360	Hopper Screen - Fixed Screen	1
22	N58004	Screen - Fine	1
23	N40728	Strap	1
24	N40732	Support Leg	1

Auger - 10 Inch
10" Extended Hopper

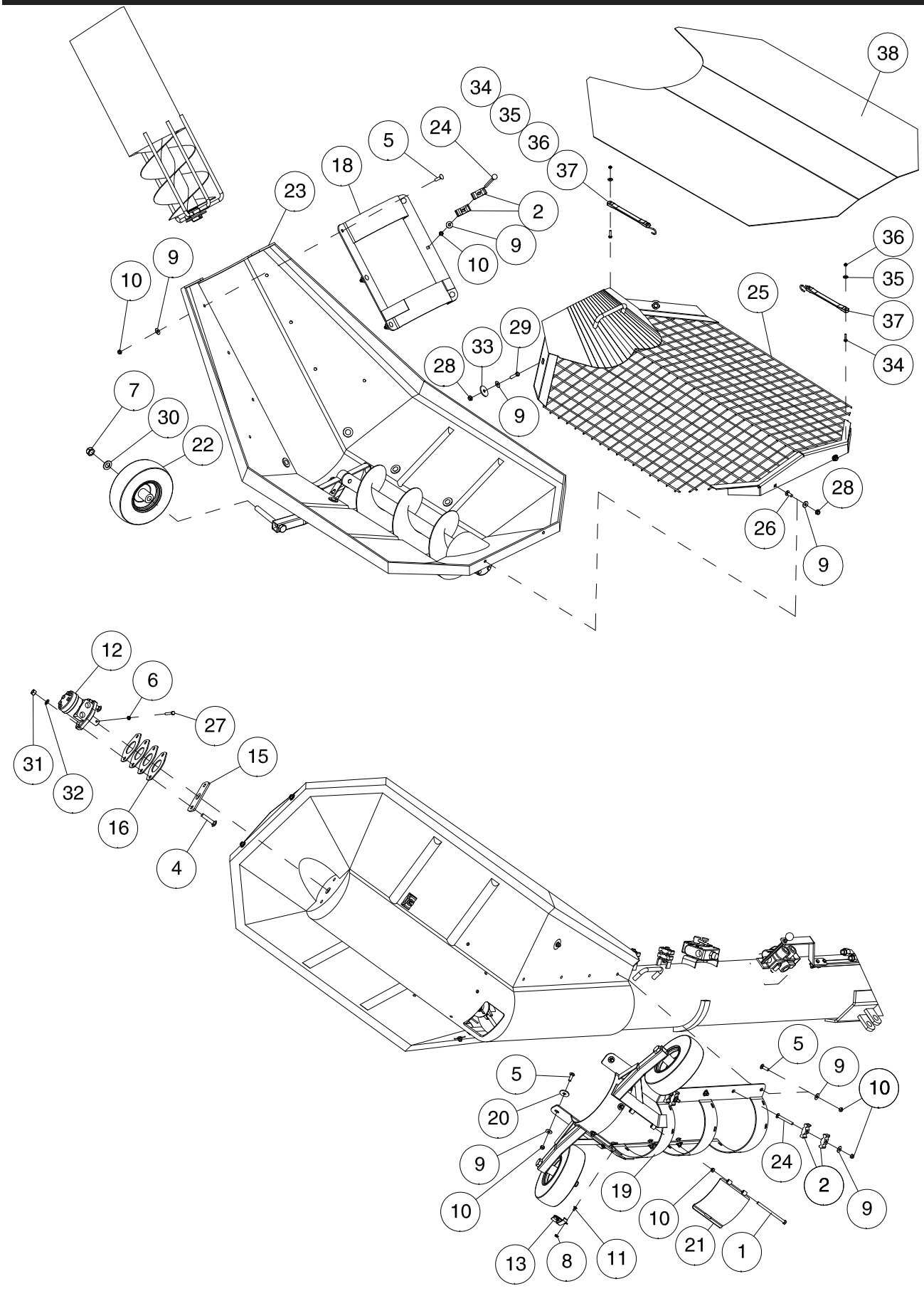

Auger - 10 Inch - 10" Extended Hopper

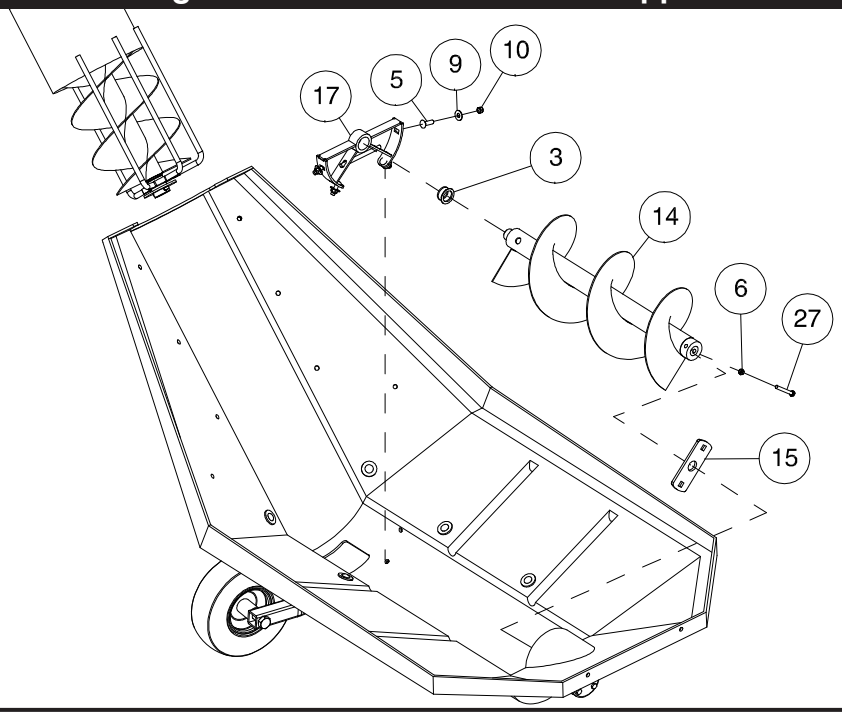

Item	Part No.	Description	Qty
1	C-3664	Hex Bolt - 3/8 x 5 1/2 Lg	1
2	C-4698	Oil Line Clamp	6
3	C22785	Auger Flyteing Bushing	1
4	C29193	Carriage Bolt - 1/2 x 2 1/2 Lg	2
5	D-5261	Carriage Bolt - 3/8 x 1 1/2 Lg	15
6	D-5272	Locknut - 5/16 Unitorque	1
7	D-5273	Locknut - 3/4 Unitorque	2
8	D-5277	Locknut - 1/4 Serrated	2
9	D-5579	Washer - 13/32 ID x 1 OD x 16 Ga	23
10	M-3388	Locknut - 3/8 Unitorque	16
11	N28361	Carriage Bolt - 1/4 x 1/2 Lg	2
12	N29319	Orbit Motor - DANFOSS DH80 - Prior to 2021 **(See Page 12-52)**	1
	N72140	Orbit Motor - Danfoss OMPX 80 - 2021 to present **(See Page 12-52)**	1
13	N42213	Latch - Cleanout	1
14	N49311	10" Flighting	1
15	N49312	Plate - Clamp	1
16	N49313	Motor Spacer Shim	4
17	N60345	Bearing Support - Extension	1
18	N49320	Clamp Frame	1
19	N49325	Support Frame	1
20	N49328	Washer - 1/2 Sq Hole	9
21	N49330	Door - Cleanout	1
22	N49335	Tire And Rim Assembly - 410/350 Reliance	2
23	N49470	Morris Extension Hopper	1
24	N49915	Carriage Bolt - 3/8 x 3 Lg	3
25	N51366	Hopper Screen	1
26	P7C616	Carriage Bolt - 3/8 x 1 Lg	2
27	S-1302	Hex Bolt - 5/16 x 2 1/2 Lg	1
28	S27987	Flange Lock Nut - 3/8 W/Center Lock	4
29	D-5261	Carriage Bolt - 3/8 x 1 1/2 Lg	2
30	W-476	Flat Washer - 3/4	2
31	W-516	Hex Nut - 1/2	2
32	W-525	Lockwasher - 1/2	2
33	W14504	Washer - 13/32 ID x 1 3/4 OD	2
34	W-1552	Hex Bolt - 1/4 x 1 Lg	4
35	S-1198	Flat Washer - 5/16 ID x 3/4 OD x 1/16 Thick	4
36	N22778	Locknut - 1/4 Nylon Insert	4
37	N19563	Tie down Strap - 10" Rubber	4
38	N56961	Screen - Fine	1

9800 and 91000 Only

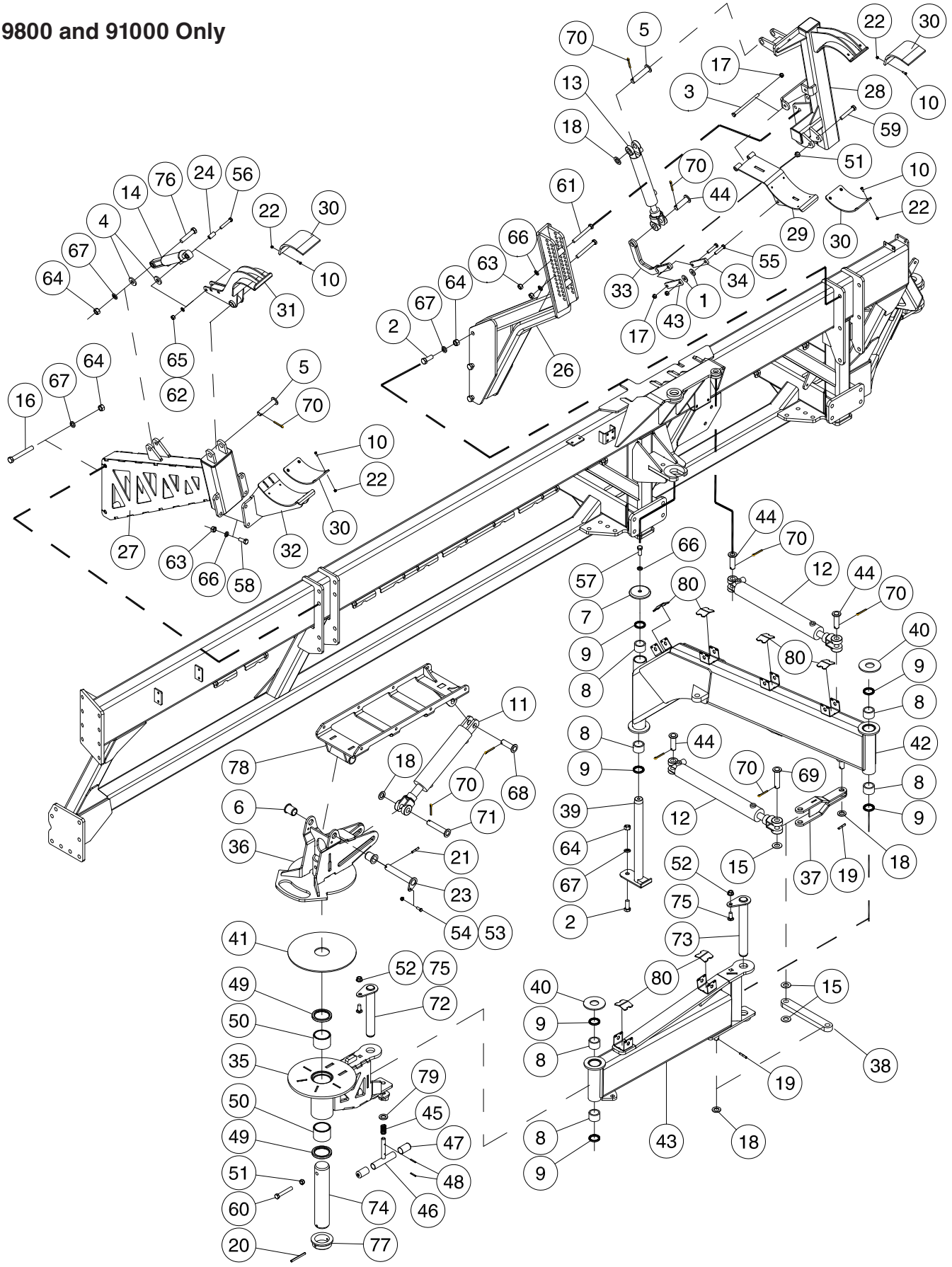

Auger Arms - 12 Inch

Item	Part No.	Description	Qty
1	C-333	Washer - 33/64 ID x 1-1/2 OD x 3/16 Thick	2
2	C-695	Hex Bolt - 3/4 x 2 Lg	7
3	C-883	Hex Bolt - 1/2 x 7 Lg	1
4	C-1526	Spacer Washer - 25/32 ID x 1 7/8 OD x 1/4	2
5	C-3717	Pin - 1 x 4 1/8 UL	2
6	C18510	Bushing - 1.275 ID x 1.625 OD x 2	2
7	C18782	Cap	1
8	C26086	Bearing - 1/4" Wall x 2.25 OD x 1 1/2 Lg	2
9	C26266	Dust Seal - 1 3/4 Shaft	2
10	C32741	Countersunk Machine Screw - 1/4 x 1	20
11	C55740	Cylinder - 3 x 10 Stroke W 1-1/2 Shaft (Seal Kit C60622)	1
12	C47188	Cylinder - 2-1/2 x 18 Stroke W 1-1/4 Shaft (Seal Kit C51992)	2
13	C49924	Cylinder - 2 x 8 Stroke W 1-1/8 Shaft	1
14	C51153	Cylinder - 1-3/4 Bore x 3-1/4 Stroke	1
15	D-5498	Washer - 1-1/16 ID x 2 OD x 11 Ga	3
16	D-5558	Hex Head Bolt - 3/4 x 6 Lg	2
17	F-3405	Locknut - 1/2 Unitorque	3
18	F-4490	Washer - 1-1/32 ID x 1-7/8 OD x 1/4	4
19	J12281	Spring Pin - 5/16 x 2 Lg	2
20	N19439	Spring Pin - 3/8 x 4 Lg	1
21	D-5244	Spiral Pin - 1/4 x 2 Lg	1
22	N15757	Locknut - 1/4 Unitorque	20
23	N36830	Auger Pivot Pin	1
24	N36900	Spacer Bushing - 3/4 OD x .510 ID	1
25	N37076	Auger Arm Pivot Pin - 1 x 12 7/16	1
26	N49575	Tower - Rear Cradle	1
27	N55739	Front Cradle Arm Large Frame	1
28	N55735	Arm - Conveyor Cradle	1
29	N55850	Upper Saddle - Auger (N55855 Assembly)	1
30	N55852	Cradle Pad - 9 3/8 Lg	4
31	N55865	Clamp - Cradle (N56671 Assembly)	1
32	N55862	Cradle Seat - Auger (N55864 Assembly)	1
33	N49923	Lock Link	1
34	N49550	Strap - Lock	2
35	N55705	Arm - Support (N55863 Assembly)	1
36	N55675	Pivot Saddle - Auger/Conveyor	1
37	N55680	Link Strap - Inner	1
38	N55682	Link Strap - Outer - Holes 12 center to center	1
39	N51725	Pin - Chrome Pivot - 1 3/4 Dia x 20 5/16 UL	1
40	N49147	Wear Plate - 1 13/16 ID x 4 1/2 OD x 1/4 Thick	2
41	N55678	Wear Plate - 3 1/16 ID x 14 OD x 1/4 Thick	1
42	N55715	Inner Arm (N55867 - Inner Arm Assembly)	1
43	N55710	Outer Arm (N55866 - Outer Arm Assembly)	1
44	N47700	Pin - 1 Dia x 2 7/8 UL	4
45	N37638	Spring	1
46	N55685	Handle - Lock	1
47	N37049	Handle - Grip	2
48	C-1124	Spiral Pin - 7/32 x 1 3/8 Lg	2
49	N56092	Seal - 3 ID x 4 OD	2
50	N56085	Bushing - 3 ID x 3 1/2 OD x 2 1/2 Lg	2
51	S-1197	Locknut - 5/8 Unitorque	2
52	W14434	Locknut - 5/8 Serrated Flange	2
53	S27987	Lock Nut - 3/8 Flange W/Center Lock	1
54	W-475	Hex Bolt - 3/8 x 1 Lg	1
55	W-489	Hex Bolt - 1/2 x 2 1/4 Lg	2
56	W-491	Hex Bolt - 1/2 x 2 3/4 Lg	1
57	W-497	Hex Bolt - 5/8 x 1-1/2 Lg	1
58	W-498	Hex Bolt - 5/8 x 1-3/4 Lg	4
59	W-503	Hex Bolt - 5/8 x 3 1/2 Lg	1
60	W-504	Hex Bolt - 5/8 x 4 Lg	2
61	W-506	Hex Bolt - 5/8 x 5 Lg	2
62	W-516	Hex Nut - 1/2	1
63	W-517	Hex Nut - 5/8	6
64	W-518	Hex Nut - 3/4	9
65	W-525	Lockwasher - 1/2	1
66	W-526	Lockwasher - 5/8	7
67	W-527	Lockwasher - 3/4	9
68	W-558	Pin - 1 Dia x 2 1/4 UL	1
69	W-1628	Pin - 1 Dia x 3 3/4 UL	1
70	W-4181	Cotter Pin - 1/4 x 2 Lg	10
71	N17217	Pin - 1 Dia x 4 7/8 UL	1
72	N55703	Pin - 1 3/4 Dia x 11 7/16 UL	1
73	N55704	Pin - 1 3/4 Dia x 13 7/16 UL	1
74	N55672	Pin - 3 Dia x 15 Lg	1
75	D17665	Carriage Bolt - 5/8 x 1 1/2 Lg	2
76	W-510	Hex Bolt - 3/4 x 3 1/2 Lg	1
77	N56093	Collar - Pivot Support	1
78	N58840	Carrier Rack - Auger	1
79	S39559	Washer - 25/32 ID x 1 3/16 OD x 12 Ga	1
80	N60937	Hose Holder Clamp	6

9800 and 91000 Only

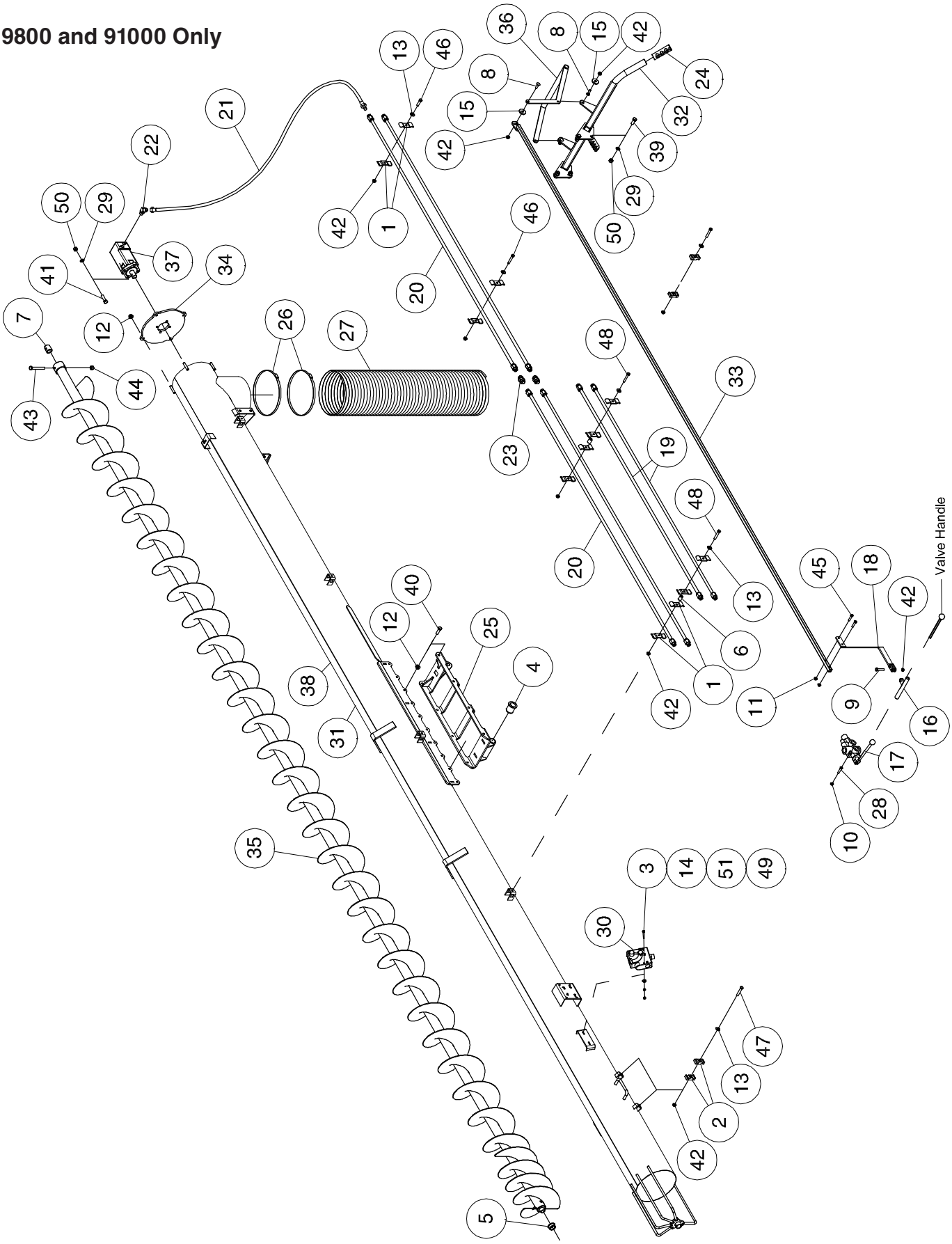

Auger - 12 Inch - 12" Auger Assembly - Single Flow Hydraulics

Item	Part No.	Description	Qty
1	D-4808	Oil Line Clamp	12
2	C-4698	Oil Line Clamp	4
3	C15319	Hex Bolt - 1/4 x 2 1/2 Lg	2
4	C18510	Bushing - 1.275 ID x 1.625 OD	2
5	C22785	Bushing - 1.148 ID x 1.385 OD	1
6	N15559	Bushing - 0.385 ID x 0.625 OD x 1 Lg	2
7	N58819	Bushing - 1.25 ID x 1.5 OD x 1 3/4 Lg	1
8	D-5260	Carriage Bolt - 3/8 x 1 1/2 Lg	3
9	W-187	Hex Bolt - 3/8 x 1 1/4 Lg	1
10	D-5277	Lock Nut - 1/4 Serrated Flange	3
11	D-5278	Lock Nut - 5/16 Flange	2
12	D14565	Lock Nut - 1/2 Serrated Flange	12
13	D-5579	Washer - 13/32 ID x 1 OD x 16 GA	6
14	S-1198	Washer - 5/16 ID x 3/4 OD x .065	2
15	N21266	Wear Washer - 1/4	3
16	N53220	Handle Control	1
17	N53205	Control Valve (Seal Kit N55676) (N55677 Valve Handle)	1
18	N53222	Link Strap - 17 1/2 Lg x 6 1/8 offset	1
19	N16347	Oil Line - 1 x 72 Lg w/ 1 5/16-12 FJIC	2
20	N58575	Oil Line - 1 x 96 Lg w/ 1 5/16-12 FJIC	4
21	N59022	Hyd Hose - 3/4 x 24 Lg - 1 5/16-12 MJIC x 7/8-14 FJIC Swivel	2
22	N49599	45 Elbow - 7/8-14 MJIC x 7/8-14 MORB	2
23	N16346	Connector - 1 5/16-12 (#16) MJIC	2
24	N39486	Handle Grip - 1 1/4 Dia	2
25	N58840	Carrier Rack - 12 Auger	1
26	N55411	Hose Clamp - 12 Dia stainless	2
27	N55408	Spout - 12 Dia x 47 coils Lg	1
28	N36128	Hex Bolt - 1/4 x 1 1/2 Lg	3
29	W-525	Lockwasher - 1/2	8
30	N51985	Flow Control Valve	1
31	N55410	Auger Tube - 12"	1
32	N55445	Auger Grab Bar	1
33	N55440	Auger Control Rod - 222 Slot center to Rod end	1
34	N55406	Plate - Auger Motor Mount	1
35	N55404	12" Flighting	1
36	N55449	Control Handle - Auger	1
37	N55409	Hydraulic Motor - WS Series - 325 cc - 2750PSI - 20GPM	1
38	N55400	Auger Assembly - 12" Dia	1
39	W-485	Hex Bolt - 1/2 x 1 1/4 Lg	4
40	S-776	Hex Bolt - 1/2 x 1 1/2 Lg	8
41	S51464	Hex Bolt - 1/2 x 2 Lg GR8	4
42	S27987	Lock Nut - 3/8 Flange Center Lock	6
43	K25798	Hex Bolt - 1/2 x 4 Lg GR8	1
44	S47110	Hex Nut - 1/2 Center Lock	1
45	W-473	Hex Bolt - 5/16 x 1 1/2 Lg	2
46	W-477	Hex Bolt - 3/8 x 1 1/2 Lg	2
47	W-479	Hex Bolt - 3/8 x 2 1/4 Lg	2
48	D-5249	Hex Bolt - 3/8 x 3 1/4 Lg	2
49	W-512	Hex Nut - 1/4	2
50	W-516	Hex Nut - 1/2	8
51	W-521	Lockwasher - 1/4	2

9800 and 91000 Only

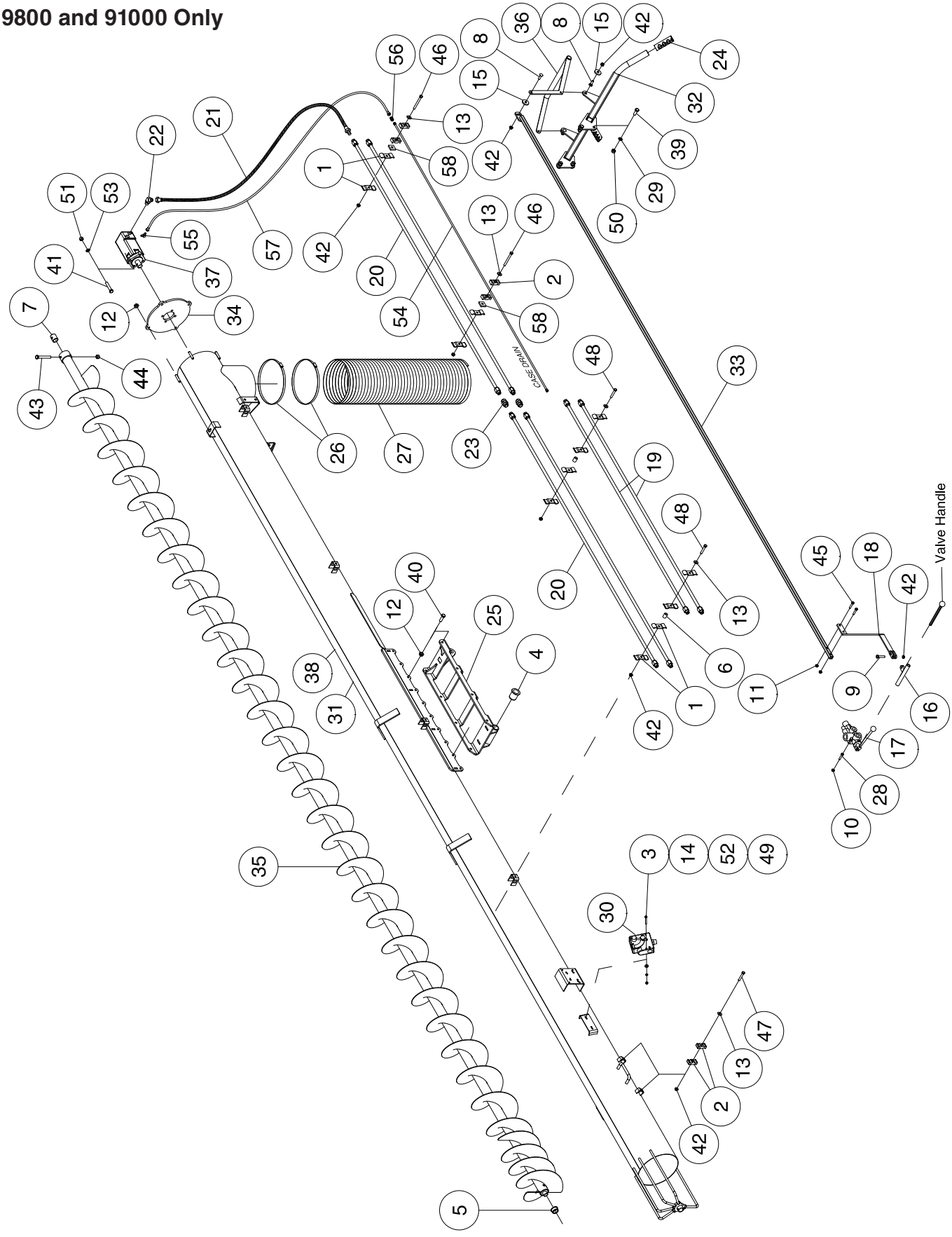

Auger - 12 Inch - 12" Auger Assembly - Dual Flow Hydraulics

Item	Part No.	Description	Qty
1	D-4808	Oil Line Clamp	12
2	C-4698	Oil Line Clamp	8
3	C15319	Hex Bolt - 1/4 x 2 1/2 Lg	2
4	C18510	Bushing - 1.275 ID x 1.625 OD x 2 Lg	2
5	C22785	Bushing - 1.148 ID x 1.385 OD x 3/4 Lg	1
6	N15559	Bushing - 0.385 ID x 0.625 OD x 1 Lg	2
7	N58819	Bushing - 1.25 ID x 1.5 OD x 1 3/4 Lg	1
8	D-5260	Carriage Bolt - 3/8 x 1 1/2 Lg	3
9	W-187	Hex Bolt - 3/8 x 1 1/4 Lg	1
10	D-5277	Lock Nut - 1/4 Serrated Flange	3
11	D-5278	Lock Nut - 5/16 Flange	2
12	D14565	Lock Nut - 1/2 Serrated Flange	12
13	D-5579	Washer - 13/32 ID x 1 OD x 16 GA	6
14	S-1198	Washer - 5/16 ID x 3/4 OD x .065	2
15	N21266	Wear Washer - 1/4	3
16	N58804	Handle Control	1
17	N58316	Control Valve - 1 5/16-12 (#16) FORB Ports - 45 gpm(Seal Kit N55676)	1
18	N58815	Link Strap - 19 3/8 Lg x 7 3/8 offset	1
19	N16347	Oil Line - 1 x 72 Lg w/ 1 5/16-12 FJIC	2
20	N58575	Oil Line - 1 x 96 Lg w/ 1 5/16-12 FJIC	4
21	N58681	Hyd Hose - 3/4 x 24 Lg w/1 5/16-12 FJIC swivel ends	2
22	N58577	45 Elbow - 1 5/16-12 MJIC x 1 5/16-12 MORB	2
23	N16346	Connector - 1 5/16-12 (#16) MJIC	2
24	N39486	Handle Grip - 1 1/4 Dia	2
25	N58840	Carrier Rack - 12 Auger	1
26	N55411	Hose Clamp - 12 Dia stainless	2
27	N55408	Spout - 12 Dia x 47 coils Lg	1
28	N36128	Hex Bolt - 1/4 x 1 1/2 Lg	3
29	W-525	Lockwasher - 1/2	4
30	N58601	Flow Control Valve	1
31	N55410	Auger Tube - 12"	1
32	N55445	Auger Grab Bar	1
33	N55440	Auger Control Rod - 222 Slot center to Rod end	1
34	N58104	Plate - Auger Motor Mount - 1/2 thick	1
35	N55404	12" Flighting	1
36	N55449	Control Handle - Auger	1
37	N58105	Hydraulic Motor - D9 Series - 300 cc - 3000PSI - 42GPM (Seal Kit N71510)	1
38	N64690	Auger Assembly - 12" Dia (Includes Items 5, 12, 31, 34, 35, 37, 41, 43, 44, 51 and 53)	1
39	W-485	Hex Bolt - 1/2 x 1 1/4 Lg	4
40	S-776	Hex Bolt - 1/2 x 1 1/2 Lg	8
41	W-500	Hex Bolt - 5/8 x 2 1/4 Lg	4
42	S27987	Lock Nut - 3/8 Flange Center Lock	7
43	K25798	Hex Bolt - 1/2 x 4 Lg GR8	1
44	S47110	Hex Nut - 1/2 Center Lock	1
45	W-473	Hex Bolt - 5/16 x 1 1/2 Lg	2
46	W-481	Hex Bolt - 3/8 x 3 1/2 Lg	2
47	W-479	Hex Bolt - 3/8 x 2 1/4 Lg	2
48	D-5249	Hex Bolt - 3/8 x 3 1/4 Lg	2
49	W-512	Hex Nut - 1/4	2
50	W-516	Hex Nut - 1/2	4
51	W-517	Hex Nut - 5/8	4
52	W-521	Lockwasher - 1/4	2
53	W-526	Lockwasher - 5/8	4
54	F-5425	Oil Line - 3/8 x 112 Lg - 9/16-18 FJIC	1
55	N16143	90 Elbow - 9/16-18 (#06) MJIC x 9/16-18 (#06) MORB	1
56	H18269	Connector - 9/16-18 (#06) MJIC	1
57	S42969	Hyd Hose - 3/8 x 36 Lg w/ #6 9/16-18 FJIC	1
58	S31476	Plate - 1 1/2 x 1 1/2 x 1/2 thick	2

Auger - 12 Inch
12" Extended Hopper

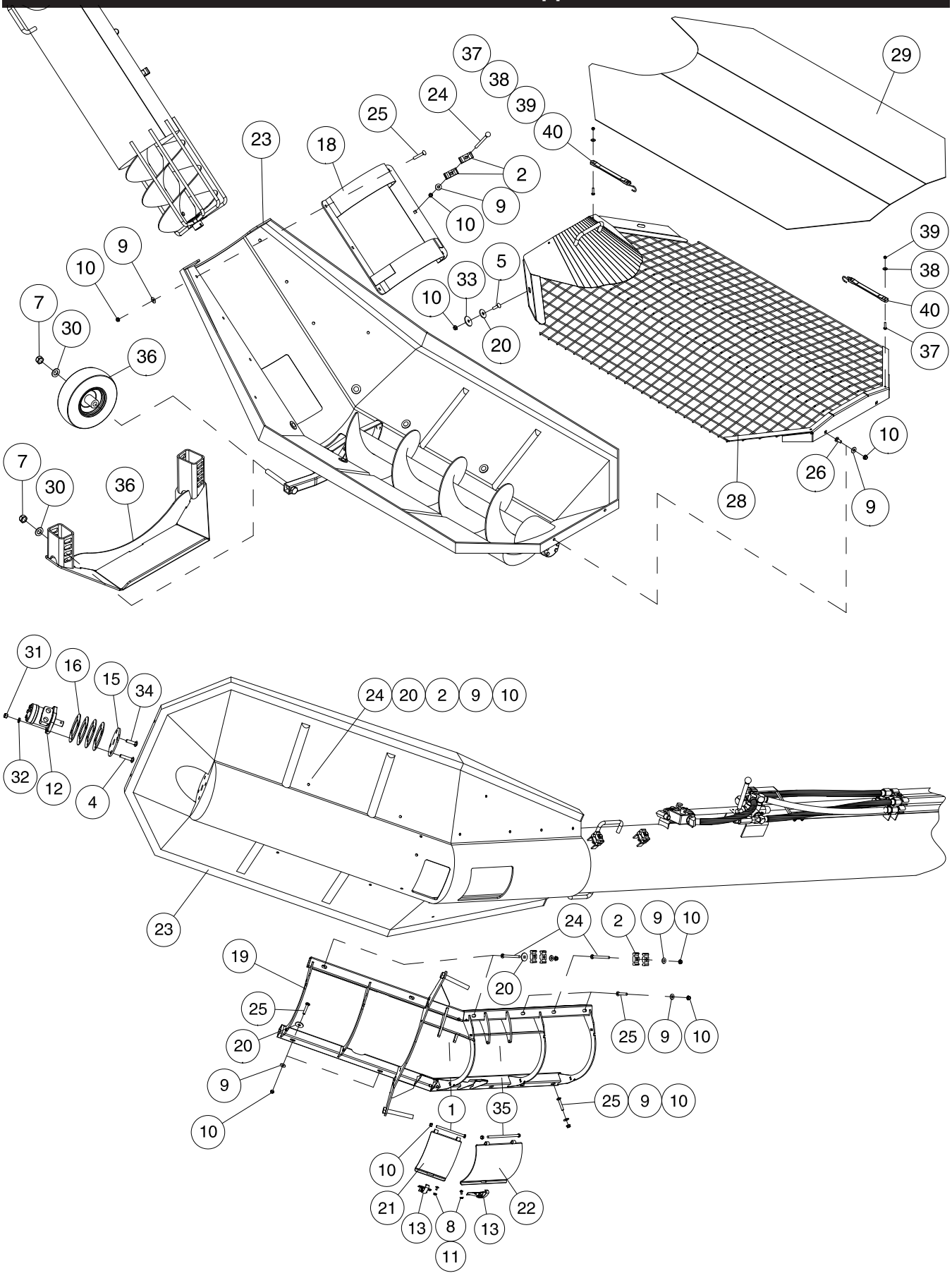

Auger - 12 Inch - 12" Extended Hopper

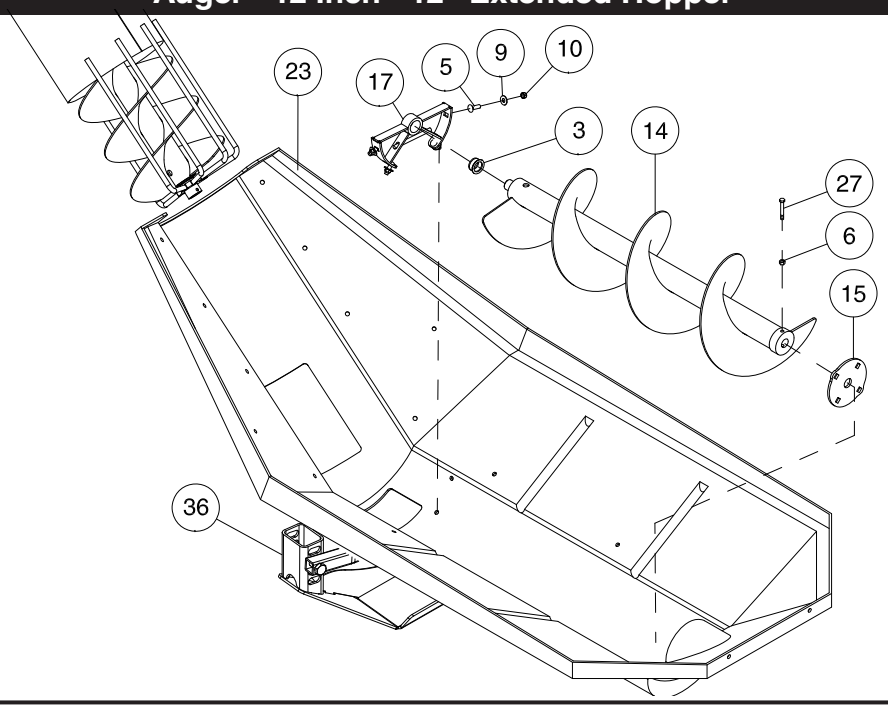

Item	Part No.	Description	Qty
1	C-3664	Hex Bolt - 3/8 x 5 1/2 Lg	1
2	C-4698	Oil Line Clamp	6
3	C22785	Auger Flighting Bushing	1
4	J12190	Carriage Bolt - 1/2 x 2 1/2 Lg	2
5	D-5261	Carriage Bolt - 3/8 x 1 1/2 Lg	4
6	D-5272	Locknut - 5/16 Unitorque	1
7	D-5273	Locknut - 3/4 Unitorque	2
8	D-5277	Locknut - 1/4 Serrated	4
9	D-5579	Washer - 13/32 ID x 1 OD x 16 Ga	22
10	M-3388	Locknut - 3/8 Unitorque	22
11	N53215	Carriage Bolt - 1/4 x 1/2 Lg	2
12	N29319	Orbit Motor - DANFOSS DH80 - Prior to 2021 **(See Page 12-52)**	1
	N72140	Orbit Motor - Danfoss OMPX 80 - 2021 to present **(See Page 12-52)**	1
13	N42213	Latch - Cleanout	2
14	N55412	12" Flighting	1
15	N55872	Plate - Clamp	1
16	N55873	Motor Spacer Shim	4
17	N60340	Bearing Support - Extension	1
18	N55419	Clamp Frame	1
19	N68275	Support Frame - 2020	1
20	N49328	Washer - 1/2 Sq Hole	9
21	N55430	Door - Lower Cleanout - 12 Auger	1
22	N58825	Door - Cleanout - 12 Auger	1
23	N55415	Extension Hopper - 12" Auger	1
24	N37219	Carriage Bolt - 3/8 x 4 1/2 Lg	3
25	N19283	Carriage Bolt - 3/8 x 3 1/2 Lg	9
26	P7C616	Carriage Bolt - 3/8 x 1	2
27	N28332	Hex Bolt - 5/16 x 3 1/2 Lg	1
28	N55435	Hopper Screen	1
29	N56945	Screen - Fine	1
30	W-476	Flat Washer - 3/4	2
31	W-516	Hex Nut - 1/2	2
32	W-525	Lockwasher - 1/2	2
33	W14504	Washer - 13/32 ID x 1 3/4 OD x 10 GA	2
34	D-5267	Carriage Bolt - 1/2 x 1 3/4 Lg	2
35	N21658	Hex Bolt - 3/8 x 8 Lg	1
36	N64091	Skid Plate - 2018 to Present	1
	N49335	Tire And Rim Assembly - 410/350 Reliance - Prior to 2018	2
37	W-1552	Hex Bolt - 1/4 x 1 Lg	4
38	S-1198	Flat Washer - 5/16 ID x 3/4 OD x 1/16 Thick	4
39	N22778	Locknut - 1/4 Nylon Insert	4
40	N19563	Tie Down Strap - 10" Rubber	4

9650 Shown
Used on:
Small Frame - 9365-9450-9535
Large Frame - 9445-9550-9650
and 9800 - Prior to 2016

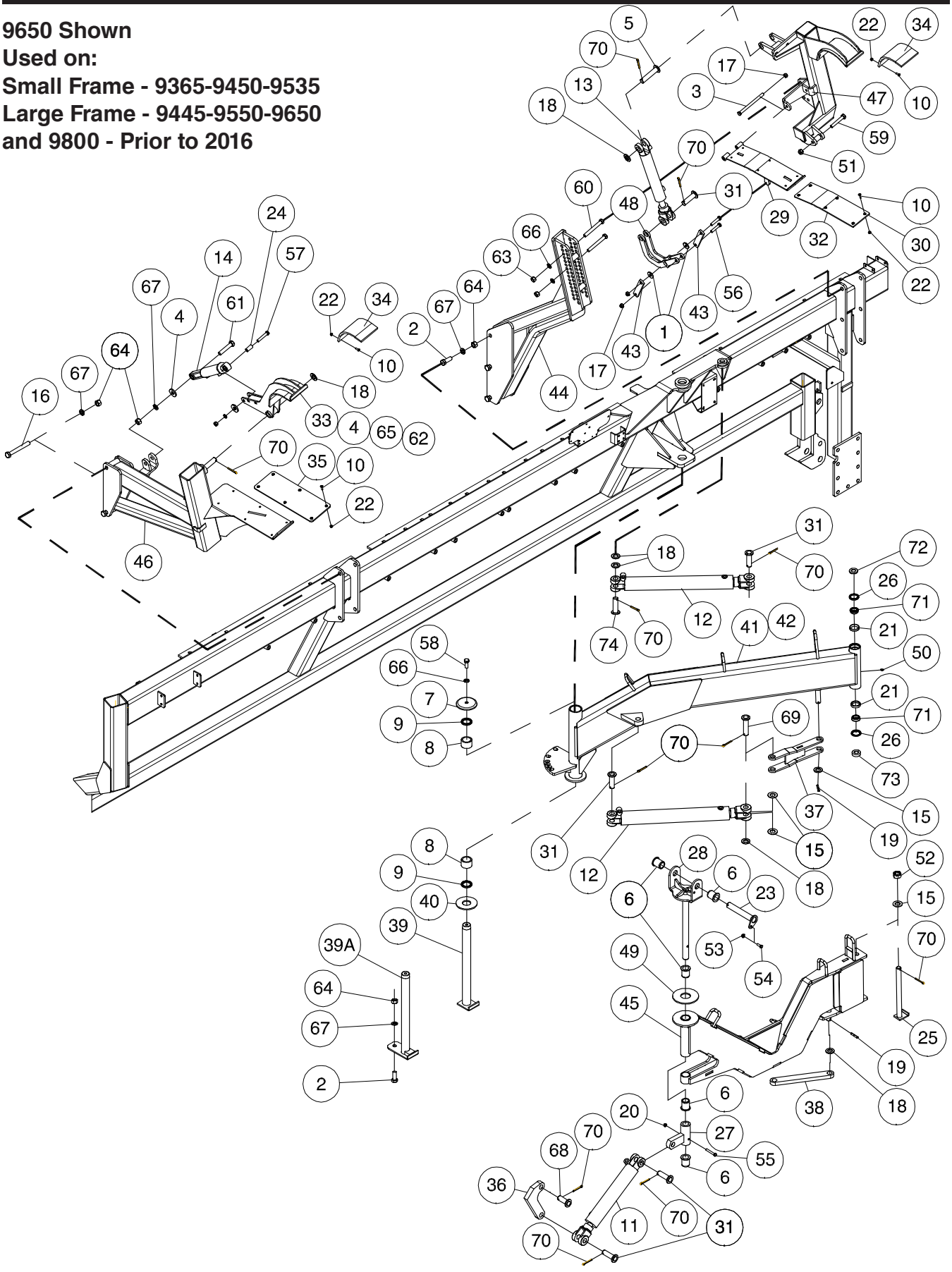

Arms - 22 ft and 23 ft Conveyor - Prior to 2018

Item	Part No.	Description	Qty
1	C-333	Hose Holder Washer - 33/64 ID x 1-1/2 OD x 3/16 Thick	2
2	C-695	Hex Bolt - 3/4 x 2 Lg.....(9800 QTY 7)	6
3	C-883	Hex Bolt - 1/2 x 7 Lg	1
4	C-1526	Spacer Washer - 25/32 ID x 1 7/8 OD x 1/4	2
5	C-3717	Pin - 1 x 4-1/8 UL	1
6	C18510	Bushing - 1.275 ID x 1.625 OD x 2	5
7	C18782	Cap	1
8	C26086	Bearing - 1/4" Wall x 2.25 OD x 1 1/2 Lg	4
9	C26266	Dust Seal - 1 3/4 Shaft	4
10	**C32741**	**Countersunk Machine Screw - 1/4 x 1**	**20**
11	C44745	Cylinder - 2-1/2 x 10 Stroke W 1-1/8 Shaft (Seal Kit C51993) (Clevis C62059)	1
12	C47188	Cylinder - 2-1/2 x 18 Stroke W 1-1/4 Shaft (Seal Kit C51992)	2
13	C49924	Cylinder - 2 x 8 Stroke W 1-1/8 Shaft (Seal Kit C51991) (Shaft C62060) (Clevis C62059)	1
14	C51153	Cylinder - 1-3/4 Bore x 3-1/4 Stroke (Seal Kit C51152)	1
15	D-5498	Washer - 1-1/16 ID x 2 OD x 11 Ga	4
16	D-5558	Hex Head Bolt - 3/4 x 6 Lg	2
17	F-3405	Locknut - 1/2 Unitorque	3
18	F-3515	Washer - 1-3/4 OD x 1-1/32 ID x 3/16	6
19	J12281	Spring Pin - 5/16 x 2 Lg	2
20	M-3388	Locknut - 3/8 Unitorque	1
21	N14009	Bearing Cup	2
22	**N15757**	**Locknut - 1/4 Unitorque**	**20**
23	N36830	Auger Pivot Pin	1
24	N36900	Spacer Bushing - 3/4 OD x .510 ID	1
25	N37076	Auger Arm Pivot Pin - 1 x 12 7/16	1
26	N37077	Dust Seal	2
27	N44740	Conveyor Cylinder Bracket	1
28	N44744	Clevis - Hyd Assist Conveyor	1
29	N45993	Conveyor Pad	1
30	N45999	Cradle Wear Strip	1
31	N47700	Cylinder Pin - 1 Dia x 2-7/8 UL	5
32	N47710	Cradle Pad - Bolted Assy	1
33	N48310	Clamp - Cradle	1
34	**N56144**	**Cradle Pad - 10 1/2 Lg**	**2**
35	N48320	Cradle Pad	1
36	N58833	Floating Lug - Conveyor	1
37	N48728	Link Strap - Inner	1
38	N48729	Link Strap - Outer	1
39	N49146	Pin - Chrome Pivot - 9365 to 9650 - Prior to 2016	1
39A	N51725	Pin - Chrome Pivot - 9800 - **(9365 to 9650 - 2016 to 2018)**	1
40	N49147	Wear Plate - 1 13/16 ID x 4 1/2 OD x 1/4 Thick	1
41	N49349	Inner Arm (42 - **N49459** - Inner Arm Assembly - includes bearings and seals)	1
43	N49550	Strap - Lock	2
44	N49575	Tower - Rear Cradle	1
45	N49900	Outer Arm - Conveyor - (9445-9550-9650-9800) Shown	1
	N48725	Outer Arm - Conveyor - (9365-9450-9535)	1
46	N49910	Front Cradle Arm Large Frame	1
47	N49921	Arm - Conveyor Cradle	1
48	N49923	Lock Link	1
49	N49950	Wear Pad - 2.062 ID x 5 1/2 OD x 1/4 Thick	1
50	S-752	Str. Grease Fitting - 1/4	1
51	S-1197	Locknut - 5/8 Unitorque	1
52	S-1311	Hex Slotted Nut - 1-14 UNS	1
53	S27987	Flange Lock Nut - 3/8 W/Center Lock	1
54	W-475	Hex Bolt - 3/8 x 1 Lg	1
55	W-480	Hex Bolt - 3/8 x 2 1/2 Lg	1
56	W-489	Hex Bolt - 1/2 x 2 1/4 Lg	2
57	W-491	Hex Bolt - 1/2 x 2 3/4 Lg	1
58	W-497	Hex Bolt - 5/8 x 1-1/2 Lg	1
59	W-503	Hex Bolt - 5/8 x 3-1/2 Lg	1
60	W-506	Hex Bolt - 5/8 x 5 Lg	2
61	W-510	Hex Bolt - 3/4 x 3 1/2 Lg	1
62	W-516	Hex Nut - 1/2	1
63	W-517	Hex Nut - 5/8	2
64	W-518	Hex Nut - 3/4	9
65	W-525	Lockwasher - 1/2	1
66	W-526	Lockwasher - 5/8	3
67	W-527	Lockwasher - 3/4	9
68	W-558	Pin - 1 Dia x 2-1/4 UL	1
69	W-1628	Pin - 1 Dia x 3-3/4 UL	1
70	W-4181	Cotter Pin - 1/4 x 2 Lg	11
71	W-4187	Bearing Cone	2
72	N37074	Bushing 1 1/2 OD x 1.012 ID x 13/32	2
73	N37075	Bushing 1 1/2 OD x 1.012 ID x 31/32	2
74	C-1429	Pin - 1 Dia x 3-3/8 UL	1

9650 Shown
Used on:
Small Frame - 9365-9450-9535
Large Frame - 9445-9550-9650

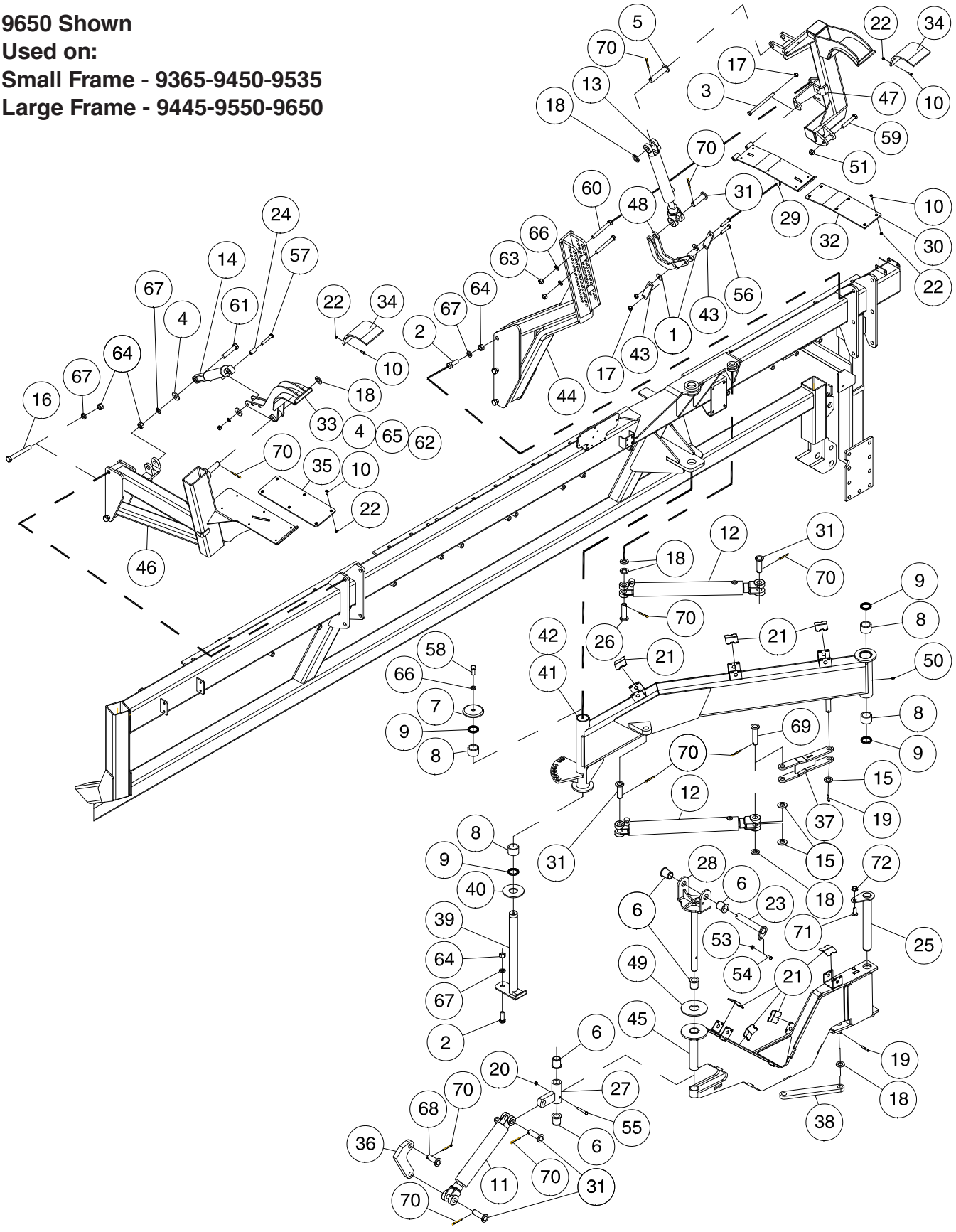

Arms - 22 ft and 23 ft Conveyor - 2018 to Present

Item	Part No.	Description	Qty
1	C-333	Hose Holder Washer - 33/64 ID x 1-1/2 OD x 3/16 Thick	2
2	C-695	Hex Bolt - 3/4 x 2 Lg	6
3	C-883	Hex Bolt - 1/2 x 7 Lg	1
4	C-1526	Spacer Washer - 25/32 ID x 1 7/8 OD x 1/4	2
5	C-3717	Pin - 1 x 4-1/8 UL	1
6	C18510	Bushing - 1.275 ID x 1.625 OD x 2	5
7	C18782	Cap	1
8	C26086	Bearing - 1/4" Wall x 2.25 OD x 1 1/2 Lg	4
9	C26266	Dust Seal - 1 3/4 Shaft	4
10	**C32741**	**Countersunk Machine Screw - 1/4 x 1**	**20**
11	C44745	Cylinder - 2-1/2 x 10 Stroke W 1-1/8 Shaft (Seal Kit C51993) (Clevis C62059)	1
12	C47188	Cylinder - 2-1/2 x 18 Stroke W 1-1/4 Shaft (Seal Kit C51992)	2
13	C49924	Cylinder - 2 x 8 Stroke W 1-1/8 Shaft (Seal Kit C51991) (Shaft C62060) (Clevis C62059)	1
14	C51153	Cylinder - 1-3/4 Bore x 3-1/4 Stroke (Seal Kit C51152)	1
15	D-5498	Washer - 1-1/16 ID x 2 OD x 11 Ga	3
16	D-5558	Hex Head Bolt - 3/4 x 6 Lg	2
17	F-3405	Locknut - 1/2 Unitorque	3
18	F-3515	Washer - 1-3/4 OD x 1-1/32 ID x 3/16	6
19	J12281	Spring Pin - 5/16 x 2 Lg	2
20	M-3388	Locknut - 3/8 Unitorque	1
21	N60937	Hose Holder Clamp	7
22	**N15757**	**Locknut - 1/4 Unitorque**	**20**
23	N36830	Auger Pivot Pin	1
24	N36900	Spacer Bushing - 3/4 OD x .510 ID	1
25	N55704	Pin - Auger Arm Pivot - 1 3/4 Dia x 13 7/16 UL	1
26	C-1429	Pin - 1 Dia x 3-3/8 UL	1
27	N44740	Conveyor Cylinder Bracket	1
28	N44744	Clevis - Hyd Assist Conveyor	1
29	N45993	Conveyor Pad	1
30	N45999	Cradle Wear Strip	1
31	N47700	Cylinder Pin - 1 Dia x 2-7/8 UL	5
32	N47710	Cradle Pad - Bolted Assy	1
33	N48310	Clamp - Cradle	1
34	**N56144**	**Cradle Pad - 10 1/2 Lg**	**2**
35	N48320	Cradle Pad	1
36	N58833	Floating Lug - Conveyor	1
37	N48728	Link Strap - Inner	1
38	N48729	Link Strap - Outer	1
39	N51725	Pin - Chrome Pivot	1
40	N49147	Wear Plate - 1 13/16 ID x 4 1/2 OD x 1/4 Thick	1
41	N71345	Inner Arm	1
42	N71350	Inner Arm Assembly - (Includes items 8, 9, and 41)	1
43	N49550	Strap - Lock	2
44	N49575	Tower - Rear Cradle	1
45	N49900	Outer Arm - Conveyor - (9445-9550-9650) Shown	1
	N48725	Outer Arm - Conveyor - (9365-9450-9535)	1
46	N49910	Front Cradle Arm Large Frame	1
47	N49921	Arm - Conveyor Cradle	1
48	N49923	Lock Link	1
49	N49950	Wear Pad - 2.062 ID x 5 1/2 OD x 1/4 Thick	1
50	S-752	Str. Grease Fitting - 1/4	1
51	S-1197	Locknut - 5/8 Unitorque	1
53	S27987	Flange Lock Nut - 3/8 W/Center Lock	1
54	W-475	Hex Bolt - 3/8 x 1 Lg	1
55	W-480	Hex Bolt - 3/8 x 2 1/2 Lg	1
56	W-489	Hex Bolt - 1/2 x 2 1/4 Lg	2
57	W-491	Hex Bolt - 1/2 x 2 3/4 Lg	1
58	W-497	Hex Bolt - 5/8 x 1-1/2 Lg	1
59	W-503	Hex Bolt - 5/8 x 3-1/2 Lg	1
60	W-506	Hex Bolt - 5/8 x 5 Lg	2
61	W-510	Hex Bolt - 3/4 x 3 1/2 Lg	1
62	W-516	Hex Nut - 1/2	1
63	W-517	Hex Nut - 5/8	2
64	W-518	Hex Nut - 3/4	9
65	W-525	Lockwasher - 1/2	1
66	W-526	Lockwasher - 5/8	3
67	W-527	Lockwasher - 3/4	9
68	W-558	Pin - 1 Dia x 2-1/4 UL	1
69	W-1628	Pin - 1 Dia x 3-3/4 UL	1
70	W-4181	Cotter Pin - 1/4 x 2 Lg	10
71	D17665	Carriage Bolt - 5/8 x 1 1/4 Lg	1
72	W14434	Locknut - 5/8 Serrated	1

9800 and 91000 Only

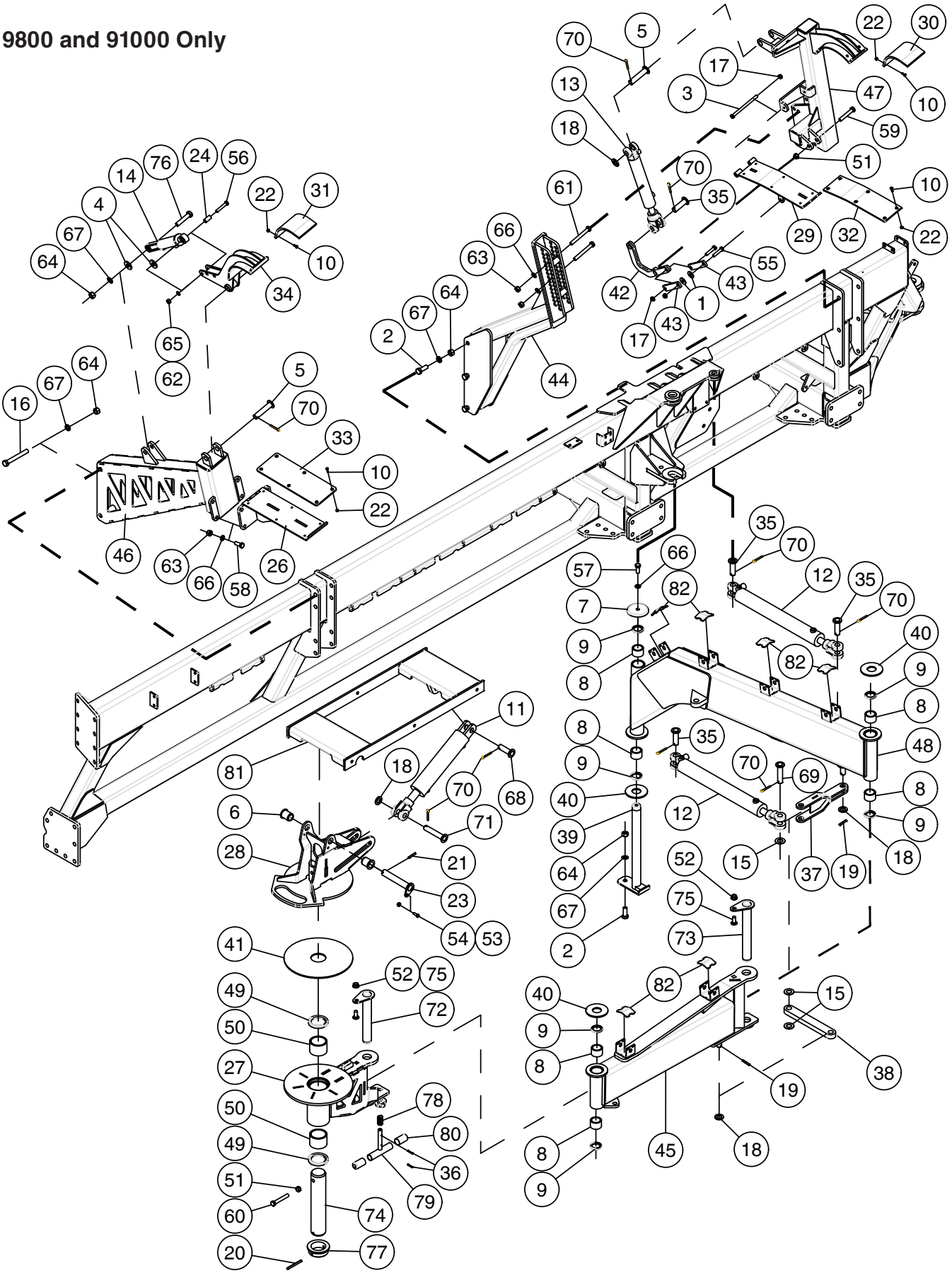

Arms - 25 ft Conveyor

Item	Part No.	Description	Qty
1	C-333	Washer - 33/64 ID x 1-1/2 OD x 3/16 Thick	2
2	C-695	Hex Bolt - 3/4 x 2 Lg	7
3	C-883	Hex Bolt - 1/2 x 7 Lg	1
4	C-1526	Spacer Washer - 25/32 ID x 1 7/8 OD x 1/4	2
5	C-3717	Pin - 1 x 4 1/8 UL	2
6	C18510	Bushing - 1.275 ID x 1.625 OD x 2	2
7	C18782	Cap	1
8	C26086	Bearing - 1/4" Wall x 2.25 OD x 1 1/2 Lg	2
9	C26266	Dust Seal - 1 3/4 Shaft	2
10	C32741	Countersunk Machine Screw - 1/4 x 1	20
11	C55740	Cylinder - 3 x 10 Stroke W 1-1/2 Shaft (Seal Kit C60622)	1
12	C47188	Cylinder - 2-1/2 x 18 Stroke W 1-1/4 Shaft (Seal Kit C51992)	2
13	C49924	Cylinder - 2 x 8 Stroke W 1-1/8 Shaft (Seal Kit C51991) (Shaft C62060) (Clevis C62059)	1
14	C51153	Cylinder - 1-3/4 Bore x 3-1/4 Stroke (Seal Kit C51152)	1
15	D-5498	Washer - 1-1/16 ID x 2 OD x 11 Ga	3
16	D-5558	Hex Head Bolt - 3/4 x 6 Lg	2
17	F-3405	Locknut - 1/2 Unitorque	3
18	F-4490	Washer - 1-1/32 ID x 1-7/8 OD x 1/4	4
19	J12281	Spring Pin - 5/16 x 2 Lg	2
20	N19439	Spring Pin - 3/8 x 4 Lg	1
21	D-5244	Spiral Pin - 1/4 x 2 Lg	1
22	N15757	Locknut - 1/4 Unitorque	20
23	N36830	Auger Pivot Pin	1
24	N36900	Spacer Bushing - 3/4 OD x .510 ID	1
25	N37076	Auger Arm Pivot Pin - 1 x 12 7/16	1
26	N55860	Cradle Seat - Conveyor (N55858 Assembly)	1
27	N55705	Arm Support (N55863 Assembly)	1
28	N55675	Pivot Saddle - Auger/Conveyor	1
29	N45993	Conveyor Pad (N47710 Assembly)	1
30	N55852	Cradle Pad - 9 3/8 Lg	1
31	N56144	Cradle Pad - 10 1/2 Lg	1
32	N45999	Cradle Wear Strip	1
33	N48320	Cradle Pad	1
34	N48310	Clamp - Cradle	1
35	N47700	Pin - 1 Dia x 2 7/8 UL	4
36	C-1124	Spiral Pin - 7/32 x 1 3/8 Lg	2
37	N55680	Link Strap - Inner	1
38	N55682	Link Strap - Outer - Hole 12 center to center	1
39	N51725	Pin - Chrome Pivot - 1 3/4 Dia x 20 5/16 UL	1
40	N49147	Wear Plate - 1 13/16 ID x 4 1/2 OD x 1/4 Thick	3
41	N55678	Wear Plate - 3 1/16 ID x 14 OD x 1/4 Thick	1
42	N49923	Lock Link	1
43	N49550	Strap - Lock	2
44	N49575	Tower - Rear Cradle	1
45	N55710	Outer Arm - Conveyor	1
46	N55739	Front Cradle Arm Large Frame	1
47	N55735	Arm - Conveyor Cradle	1
48	N55715	Inner Arm (N55867 - Inner Arm Assembly)	1
49	N56092	Seal - 3 ID x 4 OD	2
50	N56085	Bushing - 3 ID x 3 1/2 OD x 2 1/2 Lg	2
51	S-1197	Locknut - 5/8 Unitorque	2
52	W14434	Locknut - 5/8 Serrated Flange	2
53	S27987	Lock Nut - 3/8 Flange W/Center Lock	1
54	W-475	Hex Bolt - 3/8 x 1 Lg	1
55	W-489	Hex Bolt - 1/2 x 2 1/4 Lg	2
56	W-491	Hex Bolt - 1/2 x 2 3/4 Lg	1
57	W-497	Hex Bolt - 5/8 x 1-1/2 Lg	1
58	W-498	Hex Bolt - 5/8 x 1-3/4 Lg	4
59	W-503	Hex Bolt - 5/8 x 3 1/2 Lg	1
60	W-504	Hex Bolt - 5/8 x 4 Lg	2
61	W-506	Hex Bolt - 5/8 x 5 Lg	2
62	W-516	Hex Nut - 1/2	1
63	W-517	Hex Nut - 5/8	6
64	W-518	Hex Nut - 3/4	9
65	W-525	Lockwasher - 1/2	1
66	W-526	Lockwasher - 5/8	7
67	W-527	Lockwasher - 3/4	9
68	W-558	Pin - 1 Dia x 2 1/4 UL	1
69	W-1628	Pin - 1 Dia x 3 3/4 UL	1
70	W-4181	Cotter Pin - 1/4 x 2 Lg	10
71	N17217	Pin - 1 Dia x 4 7/8 UL	1
72	N55703	Pin - 1 3/4 Dia x 11 7/16 UL	1
73	N55704	Pin - 1 3/4 Dia x 13 7/16 UL	1
74	N55672	Pin - 3 Dia x 15 Lg	1
75	D17665	Carriage Bolt - 5/8 x 1 1/2 Lg	2
76	W-510	Hex Bolt - 3/4 x 3 1/2 Lg	1
77	N56093	Collar - Pivot Support	1
78	N37638	Spring	1
79	N55685	Handle - Lock	1
80	N37049	Handle - Grip	2
81	* * * * *	Carrier Rack - 25' Conveyor	1
82	N60937	Hose Holder Clamp	6

22ft Conveyor Model 161022 (fixed rubber hopper) – SN#14809-16184 – Body portion length (round tube) 209.75”

23ft Conveyor Model 161023 (fixed rubber hopper) – SN#16185-16187 – Body portion length (round tube) 221.75”

23ft Conveyor Model 161023 (collapsible canvas hopper) – SN#16188 and later – Body portion length (round tube) 221.75”

22 ft and 23 ft Conveyor Assembly

Item	Part No.	Description	Qty
1	C-4370	Oil Line - .625 x 128 Lg **- 7/8-14 FJIC** - 22 ft Conveyor	2
	C-4368	**Oil Line - 5/8 x 88 Lg - 7/8-14 FJIC - 23 ft Conveyor**	**4**
2	C-4698	Nylon Clamp	6
3	D-5259	Carriage Bolt - 5/16 x 3/4 Lg	1
4	D-5260	Carriage Bolt - 3/8 x 1-1/2 Lg	1
5	D-5272	Locknut - 5/16 Unitorque	1
6	D-5278	Flange Lock Nut - 5/16	12
7	F-1767	Hex Bolt - 5/16 x 3/4 Lg	10
8	N21266	Wear Washer - 7/16 ID x 1 1/2 OD	3
9	N36447	Hose Clamp - 10 3/4 Dia	2
10	N36830	Auger Pivot Pin	1
11	N44744	Clevis - Hyd Assist Conveyor	1
12	N47037	Conveyor Control Handle	1
13	N47343	Conveyor Spout - 10" Outlet x 41 coils Lg	1
14	N47706	Control Mounting Bracket	1
15	N47940	Conveyor Light Bracket - Tank	1
16	N47941	Conveyor Light Bracket - Hopper	1
17	N53245	Link - Conveyor Control - 216 1/4 Slot center to hole center	1
18	N48300	Conveyor - 22 ft long	1
	N51950	Conveyor - 23 ft Long	1
19	N58833	Floating Lug - Conveyor	1
20	N49936	Hook	1
21	N49937	Quick Link - 3/16	1
22	N49942	Spout Bracket - Conveyor	1
23	N49943	Spout Hold-Up Chain	1
24	N53205	Hyd Control Valve (Seal Kit N55676) (N55677 Valve Handle)	1
25	N53220	Handle Control	1
26	N53225	Control Rod Strap - Conveyor	1
27	S27987	Flange Lock Nut - 3/8 W/Center Lock	8
28	W-187	Hex Bolt - 3/8 x 1 1/4 Lg	3
29	W-469	Hex Head - 1/4 x 3/4 Lg	2
30	W-472	Hex Bolt - 5/16 x 1-1/4 Lg	2
31	W-475	Hex Bolt - 3/8 x 1 Lg	3
32	W-479	Hex Bolt - 3/8 x 2 1/4 Lg	3
33	W-512	Hex Nut - 1/4	2
34	W-514	Hex Nut - 3/8	2
35	W-521	Lockwasher - 1/4	2
36	W-523	Lockwasher - 3/8	6
37	W-538	Washer - 7/16 ID x 1 OD x 14 Ga	9
38	W-558	Pin - 1 Dia x 2-1/4 UL	1
39	N36128	Hex Bolt - 1/4 x 1 1/2 Lg	3
39A	D-5277	Lock Nut - 1/4 Flange Serrated	3
40	W-4181	Cotter Pin - 1/4 x 2 Lg	1
	45423-03	Rear Hopper	1
	N49475	Right Side Hopper - 45423-04	1
	N49474	Left Side Hopper - 45423-05	1
	N49472	Belt, Rubber Cleated - 21’ conveyor - (42'-4" Cut Length) - 24550-21	1
	N49473	Belt, Rubber Cleated - 22’ conveyor - (44'-4" Cut Length) - 24550-22-M	1
	N55890	Belt, Rubber Cleated - 23’ conveyor - (46' Cut Length) - 24550-26-M	1
	N58827	Splice Pin - 16" Belts - 24121-75	16”
	24121-73	Retainer, Pin	2
	24121-72	Belt Lacing	32”
	N49469	Splice Kit - Kit can be used with either belt as it only includes lacing parts - 24387-16	
	N64090	Belt Splice Tool - 24387-01	
	N53224	Cleated Belt Splice Kit - Includes 24" cleated belt, splices, wire cable, crimp washers	
	N58839	Replacement Decal Kit	

Conveyor Assembly
25 ft Conveyor

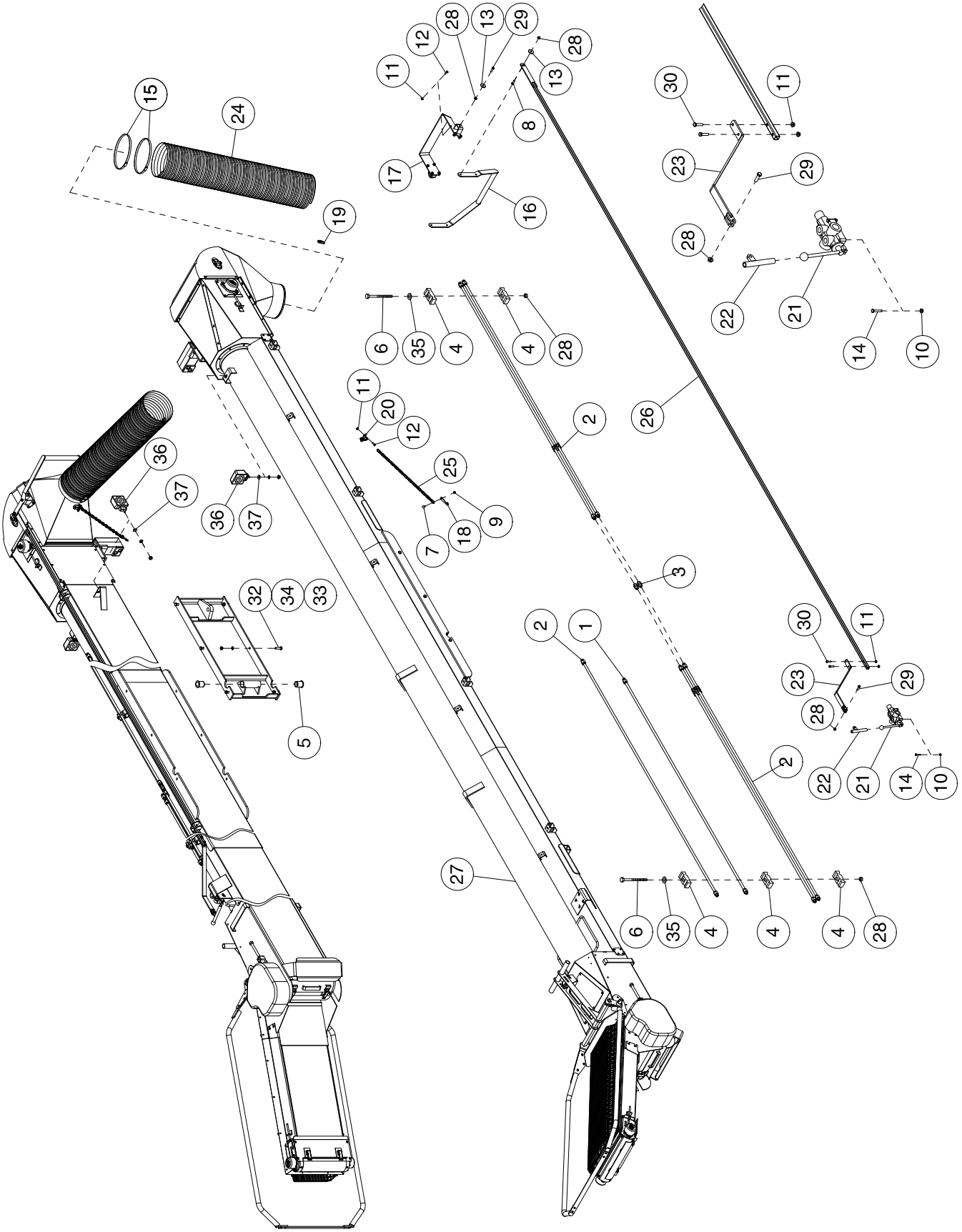

25 ft Conveyor Assembly

Item	Part No.	Description	Qty
1	C-4368	Oil Line - 5/8 x 88 Lg W/ 7/8-14 FJIC	1
2	C-4369	Oil Line - 5/8 x 96 Lg W/ 7/8-14 FJIC	5
3	C-4469	Connector - 7/8-14 MJIC	2
4	C-4698	Oil Line Clamp	10
5	C18510	Bushing - 1.275 ID x 1.625 OD x 2 Lg	2
6	D-5249	Hex Bolt - 3/8 x 3 1/4 Lg	2
7	D-5259	Carriage Bolt - 5/16 x 3/4 Lg	1
8	D-5260	Carriage Bolt - 3/8 x 1 1/4 Lg	1
9	D-5272	Locknut - 5/16 Unitorque	1
10	D-5277	Flange Lock Nut - 1/4 Serrated	3
11	D-5278	Flange Lock Nut - 5/16	12
12	F-1767	Hex Bolt - 5/16 x 3/4 Lg	10
13	N21266	Wear Washer - 1/4	3
14	N36128	Hex Bolt - 1/4 x 1 1/2 Lg	3
15	N36447	Hose Clamp - 10 3/4 Dia	2
16	N47037	Conveyor Control Handle	1
17	N47706	Control Mounting Bracket	1
18	N49936	Hook	1
19	N49937	Quick Link - 3/16	1
20	N49942	Spout Braket - Conveyor	1
21	N53205	Control Valve (Seal Kit N55676) (N55677 Valve Handle)	1
22	N53220	Handle Control	1
23	N53225	Control Rod Strap - Conveyor	1
24	N53913	Conveyor Spout - 10"	1
25	N53914	Spout Hold-Up Chain	1
26	N55884	Link - Conveyor Control	1
27	N56100	Conveyor - 25Ft	1
28	S27987	Flange Lock Nut - 3/8 W/Center Lock	8
29	W-187	Hex Bolt - 3/8 x 1 1/4 Lg	3
30	W-472	Hex Bolt - 5/16 x 1 1/4 Lg	2
31	W-479	Hex Bolt - 3/8 x 2 1/4 Lg	2
32	W-487	Hex Bolt - 1/2 x 1 3/4 Lg	6
33	W-516	Hex Nut - 1/2	6
34	W-525	Lockwasher - 1/2	6
35	W-538	Washer - 7/16 ID x 1 OD x 14 Ga	4
36	N53228	Work Light - Led	2
37	N53231	Backing Washer - 5/16	2
	N53224	Belt Splice Kit - 16" Cleated Belt - 24387-15	1
	N64090	Belt Splice Tool - 24387-01	
	N58827	Splice Pin - 16" Belts - 24121-75	1
	N62349	Belt, Rubber Cleated - 25' conveyor - (50'10" Cut Length) - 24550-30-M	1
	N60938	Collapsable Hopper Cover (Not Shown)	1
	N62290	Collapsable Hopper Cover Kit (Not Shown) (Includes N60938)	1
	N49469	Splice Kit - Kit can be used with either belt as it only includes lacing parts - 24387-16	
	N53224	Cleated Belt Splice Kit - Includes 24" cleated belt, splices, wire cable, crimp washers	
	N58839	Replacement Decal Kit	

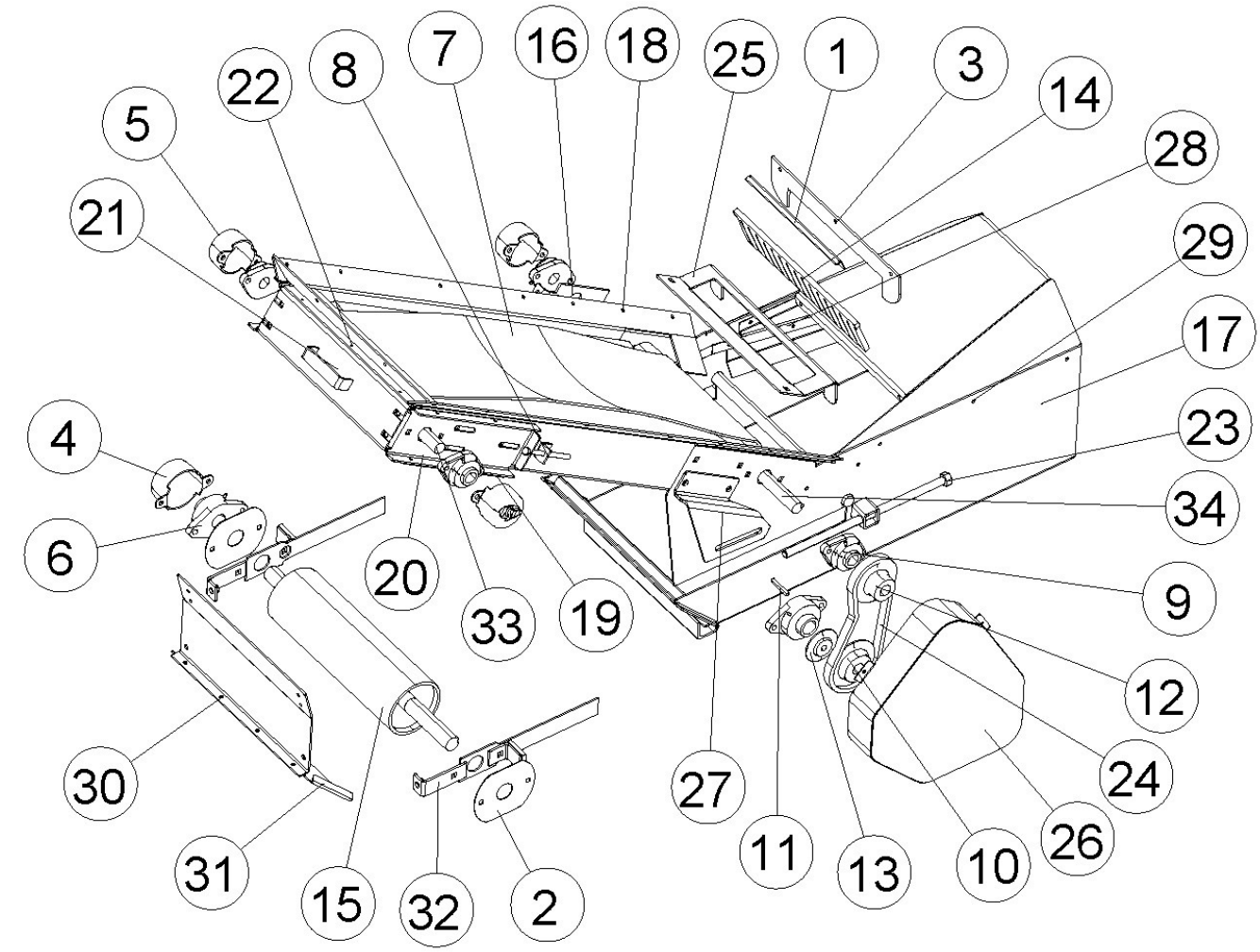
22
8
7
16
18
25
1
3
14
28
5
21
29
17
4
23
34
6
20
33
19
9
12
24
30
27
11
13
10
26
31
15
32
2

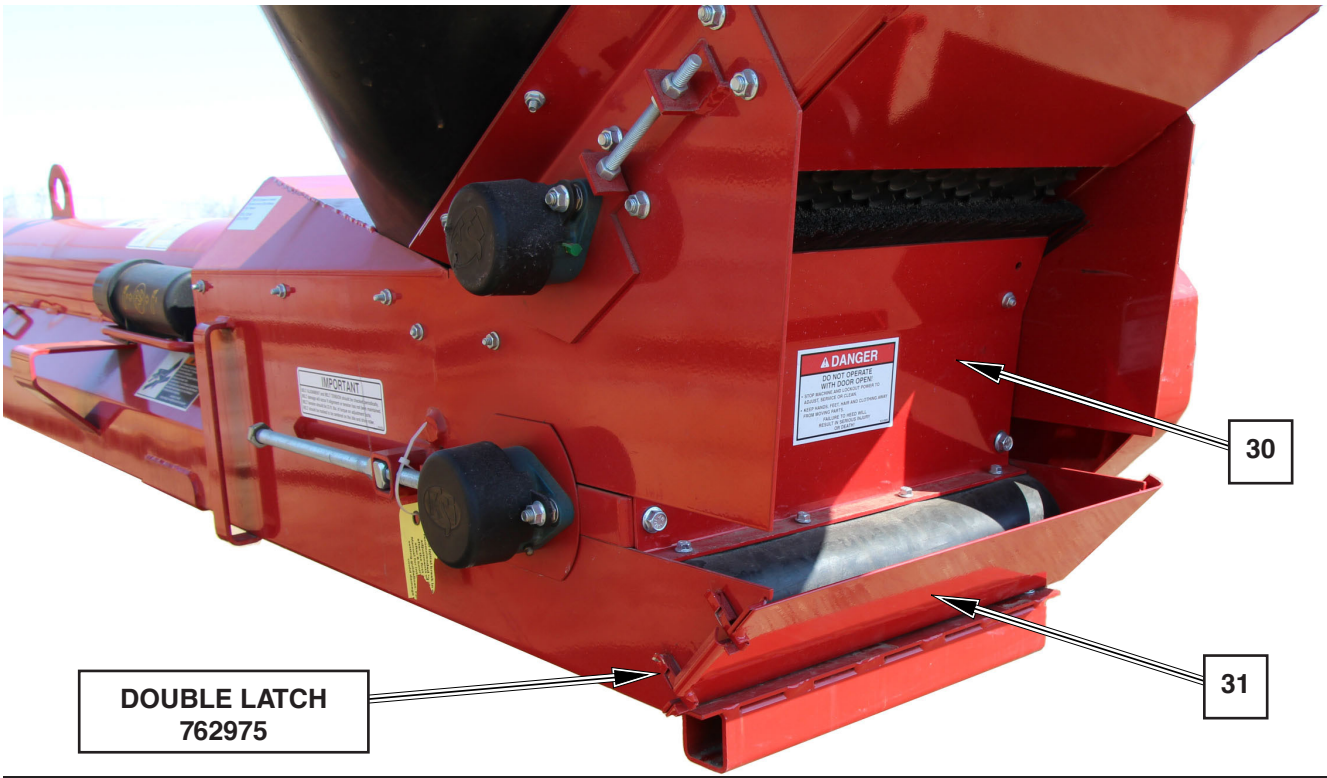
DANGER
DO NOT OPERATE
WITH DOOR OPEN
IMPORTANT
30
31
DOUBLE LATCH
762975

Conveyor - Lower End Group - Rigid Rubber Hopper

Item	Part No.	Description	Qty
		For 22 & 23 Serial Number 10047 to 16187	
1	N60612	Brush Holder - 20038-05	1
2	N60646	Bearing Plate - 20048-01	2
3	N53681	Brush Flap - 23122-07	1
4	N58844	Cover - 1 1/4" Bearing - 23150-02	1
5	N58842	Cover - 1" Bearing - 23150-04	3
6	N49488	Bearing - Flange - 1 1/4" (J-Day T-62G) - 24112-01	2
7	N49471	Belt-Crescent Cup - 16 x 92 Lg - 24121-14 (for 22 & 23 SN 10047 to 16187)	1
8	N62327	Tap Bolt - 3/8 x 5 Lg - 24208-01	3
9	N49486	Bearing - Flange - 1" - 24336-01	4
10	N49485	Sprocket - 50/20 - 24343-01	1
11	24356-01	Key - 1" Shaft	2
12	N49484	Sprocket, Drive - 50/16 - 24395-01	1
13	N49483	Sprocket, Idler - 50/15 - 24396-01	1
14	N49482	Brush - 16" - 24418-01	1
15	N56132	Drum Assembly - 5" - 24440-01	1
16	N60641	Bearing Bracket - 28007-01	1
17	N62321	Transition Assembly - Lower - 28303-00	1
18	N60800	Frame Assembly - Feed Belt Bed - 28306-00	1
19	N60614	Hopper Bottom Ground Shield - 28335-01	1
20	N60647	Bracket, Lower Bearing - 28344-00	2
21	N60803	End Panel w/Handle - 28345-02	1
22	N49480	Tail Flap - Lower - 28351-01	1
23	N55874	Screw - Tensioning (5/8) - 24115-01 ..... (N62929 - Square Nut - 5/8 - 24114-01)	2
24	45416-01	Roller Chain - 50	1
25	N60648	Flow Guard - 45418-01	1
26	N60611	Chain Guard - 45420-00	1
27	N60804	Bracket - Idler Sprocket - 45421-01	1
28	N60617	Bracket Flap - Left - 45425-01	1
29	N60618	Bracket Flap - Right - 45425-02	1
30	45427-01	Door - Lower	1
31	45428-01	Door - Snap On	1
32	N60649	Bracket Assembly - Lower Bearing - 46007-00	2
33	N56133	Drum Assembly - 3" Idler - 47514-00	1
34	N56134	Drum Assembly - 3" Lagged - 47523-00	1
		Items Not Shown	
	45431-81	Flap Hold Down	2
	N60613	Clamp - Brush - 45038-05	1
	N53710	Flap - Lower Door - 45429-01	1
	N49469	Belt Splice Kit - 24387-16 (Kit can be used with either belt as it only includes lacing parts)	1
	N64090	Belt Splice Tool - 24387-01	
	N53224	Cleated Belt Splice Kit - Includes 24" cleated belt, splices, wire cable, crimp washers	1
	N60858	Canvas - Hopper - Short - 81011-03 - for 22 & 23 SN 15185 to 16187	
	N58189	Feed Control / Ceanout Doot Kit - 81035-00	
	N55670	Collapsable Hopper Retrofit Kit - 81100-01 - for 22 & 23 SN 10047 to 16187	1

22ft Model 161022 (fixed rubber hopper) - SN#14809-16184 - Body portion length (round tube) 209.75"

23ft Model 161023 (fixed rubber hopper) - SN#16185-16187 - Body portion length (round tube) 221.75"

23ft Model 161023 (collapsible canvas hopper) - SN#16188 to 20521 - Body length (round tube) 221.75”

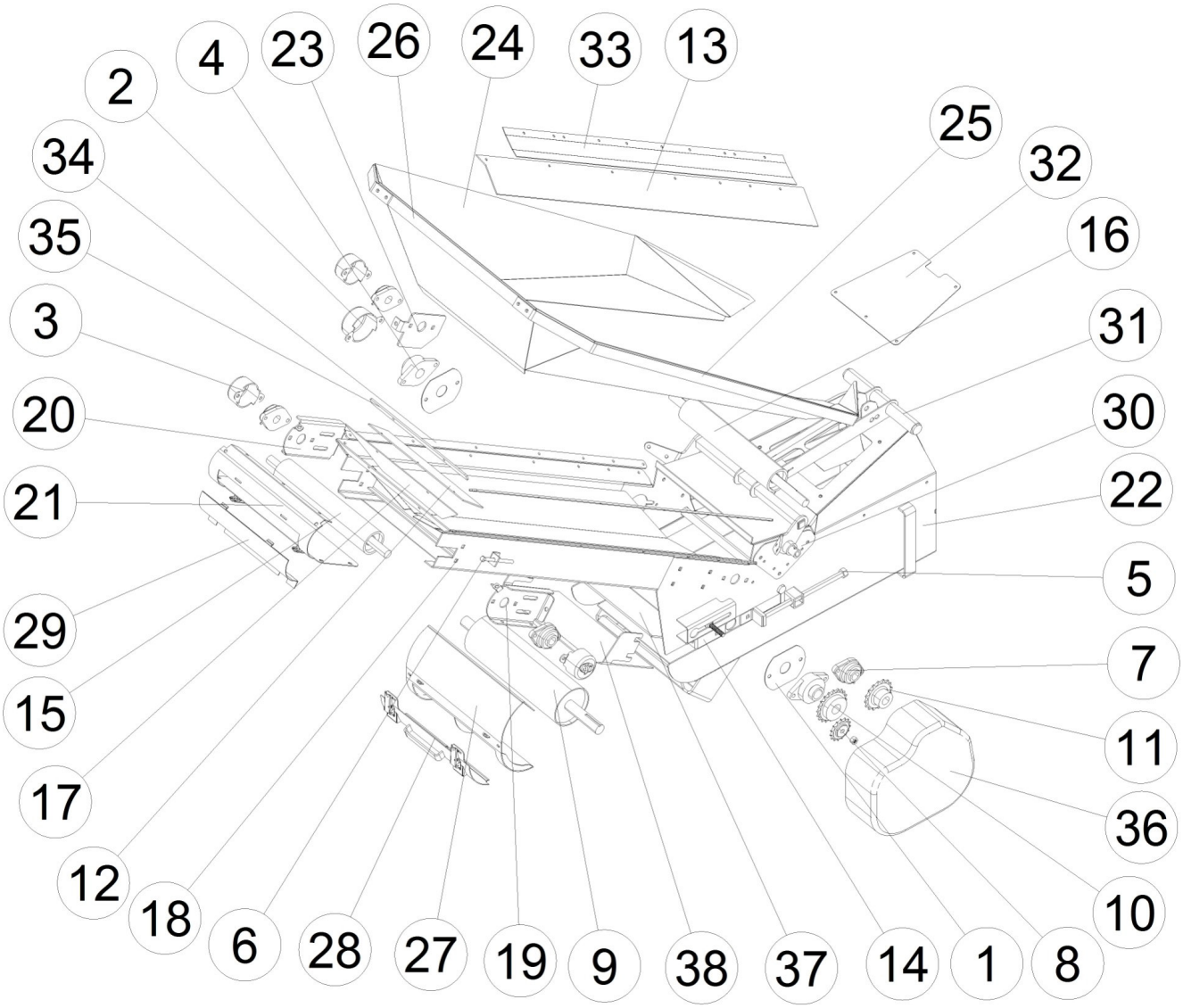



23 ft Conveyor - Lower End Group - Collapsible Hopper

Item	Part No.	Description	Qty
		For 23 Serial Number 16188 to 20521	
1	N60646	Bearing Plate - 20048-01	2
2	N58844	Cover - 1 1/4" Bearing - 23150-02	1
3	N58842	Cover - 1" Bearing - 23150-04	2
4	N49488	Bearing - Flange - 1 1/4" (J-Day T-62G) - 24112-01	2
5	N55874	Screw - Tensioning (5/8) - 24115-01 ..... (N62929 - Square Nut - 5/8 - 24114-01)	3
6	N62327	Tap Bolt - 3/8 x 5 Lg - 24208-01	3
7	N49486	Bearing - Flange - 1" - 24336-01	4
8	N49483	Sprocket, Idler - 50/15 - 24396-01	1
9	N56132	Drum Assembly - 5" - 24440-01	1
10	N56735	Sprocket - 50/25 - 24491-05	1
11	N56736	Sprocket - 50/13 - 24397-02	1
12	N49480	Tail Flap - Lower - 28351-01	1
13	N55892	Flap Hopper Side - 45432-05	2
14	N60649	Bracket Assembly - Lower Bearing - 46007-00-MR	2
15	N56133	Drum Assembly - 3" Idler - 47514-00	1
16	N56134	Drum Assembly - 3" Lagged - 47523-00	1
17	N49476	Flap Hopper - Back - 47640-01	1
18	81003-00-MR	Frame AS.	1
19	81005-00-MR	Bearing Slide	1
20	81006-00-MR	Bearing Slide	1
21	N62090	Rear Cover - Stainless - 81007-80 (for 23' SN 16188 and above)	1
22	81009-00-MR	Transition Assembly - Lower	1
23	81010-01-MR	Bearing Bracket	1
24	N55895	Canvas - Hopper W/2 Hole Side Rails - 81011-01 serial #16188 to 17394	1
	N60642	Canvas - Hopper W/3 Hole Side Rails - 81011-04 serial #17395 and Higher	1
25	N56091	Hopper Bar - Sides - 81095-00-MR serial #16188 to 17394	2
	N65796	Hopper Side Rail Right - 81072-00-MR serial #17395 and Higher	1
	N65798	Hopper Side Rail Left - 81073-00-MR serial #17395 and Higher	1
26	N64001	Hopper Strap - Back - 81012-02-MR serial #16188 to 17394	1
	N65746	Hopper Strap - Back - 81074-01-MR serial #17395 and Higher	1
27	81015-00-MR	Cover - Rear	1
28	N55896	Door - Rear - 81016-00-MR	1
29	N55897	Rear Door - Inlet - 81017-00-MR	1
30	81018-00-MR	Handle Pivot	1
31	N64235	Hopper Handle - 81019-00-MR serial #16188 to 17394	1
	N60643	Hopper Handle - 81075-00-MR serial #17395 and Higher	1
32	81021-01-MR	Cover - Transition	1
33	81022-81	Hold Down Flap	2
34	N64083	Strap Side - 81023-01-MR	2
35	N64084	Strap End - 81023-02-MR	1
36	N58617	Molded Drive Chain Cover Assembly - 81039-00 - Includes Cover, Hinge, Hold-Down Catch, Rubber Hold-Down and Hardware	1
37	N55889	Flow Guard - 81027-01	1
38	81028-01-MR	Flowguard Flap Support	1
		Items Not Shown	
	N60643	Hopper Handle - 3 hole mount - 23 ft - SERIAL #17395 + HIGHER	
	N56105	Belt-Crescent Cup - 16 x 112 Lg - 24121-92 (for 23' SN 16188 and above)	1
	N49469	Belt Splice Kit - 24387-16 (Kit can be used with either belt as it only includes lacing parts)	1
	N64090	Belt Splice Tool - 24387-01	
	N53224	Cleated Belt Splice Kit - Includes 24" cleated belt, splices, wire cable, crimp washers	
	24398-03	Link Connecting #50 Heavy	1
	24356-01	Key - 1" Shaft	2
	24492-03	Hitch Pin - 1/2 x 4 Lg	1
	N49477	Cleated Belt Seal Flap - Left Low - 46105-01	1
	N49478	Cleated Belt Seal Flap - Right Low - 46105-02	1
	N49476	Rear Hopper Belt Seal - 47640-01	1
	N55891	Flap - Flow Guard - 81029-01	1
	N60938	Collapsable Hopper Cover - Fits Collapsible Hopper serial #16188 to 17394	1
	N62290	Collapsable Hopper Cover Kit - Fits Collapsible Hopper serial #16188 to 17394	1
		Items Not Shown - See Pages 12-53 to 12-55	

Conveyor - Lower End Group
23 ft Conveyor - Collapsible Hopper - SN 20522 and later

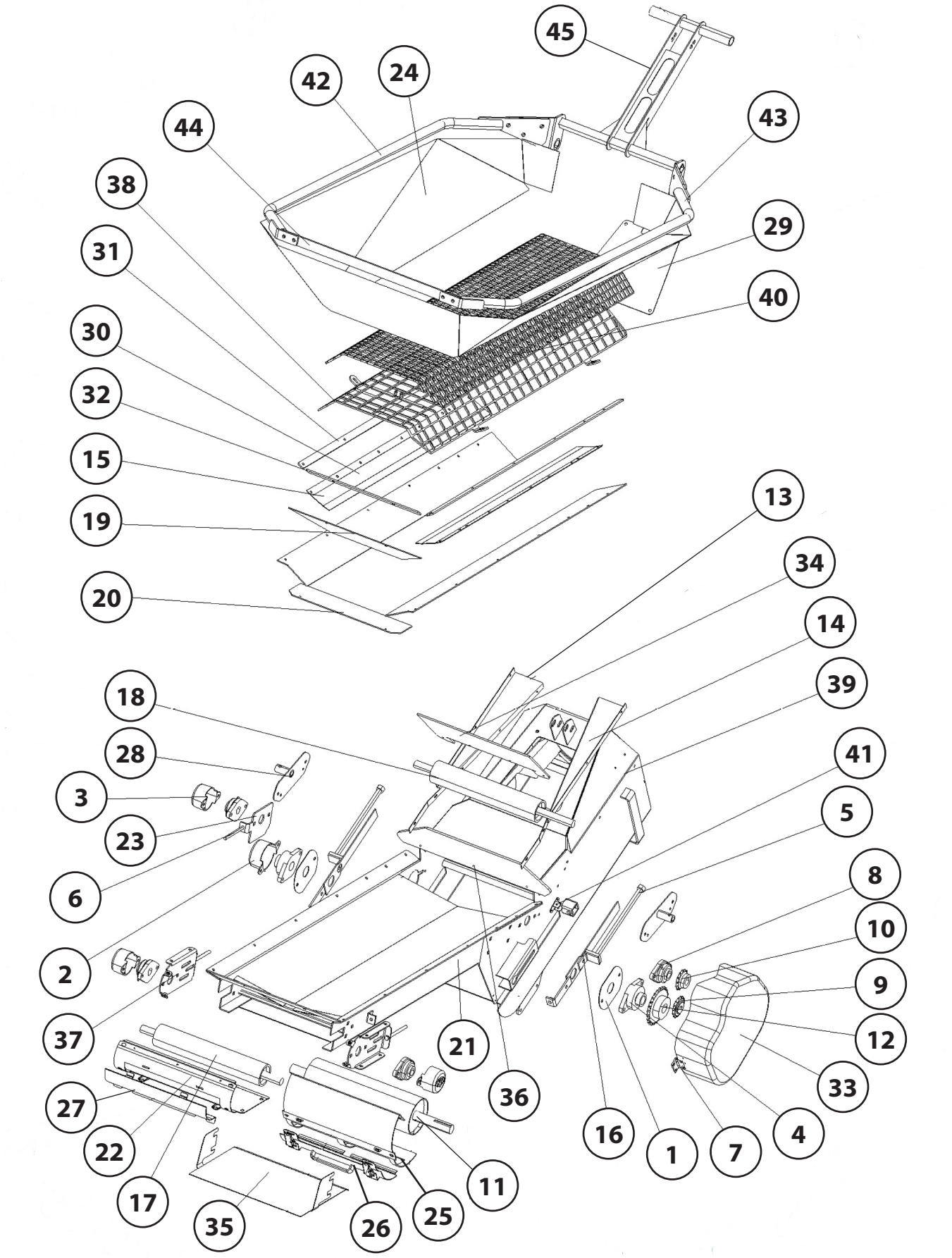

23 ft Conveyor - Lower End Group - Collapsible Hopper

Item	Part No.	Description	Qty
		For 23 Serial Number 20522 and Higher	
1	N60646	Bearing Plate - 20048-01	2
2	N58844	Cover - 1 1/4" Bearing - 23150-02	1
3	N58842	Cover - 1" Bearing - 23150-04	2
4	N49488	Bearing - Flange - 1 1/4" (J-Day T-62G) - 24112-01	2
5	N55874	Screw - Tensioning (5/8) - 24115-01 ..... (N62929 - Square Nut - 5/8 - 24114-01)	3
6	N62327	Tap Bolt - 3/8 x 5 Lg - 24208-01	3
7	24253-01	Hinge - Surface Mount	1
8	N49486	Bearing - Flange - 1" - 24336-01	4
9	N49483	Sprocket, Idler - 50/15 - 24396-01	1
10	N56736	Sprocket - 50/13 - 24397-02	1
11	N56132	Drum Assembly - 5" - 24440-01	1
12	N56735	Sprocket - 50/25 - 24491-05	1
13	N60617	Flap Bracket - Left (Shown) - 45425-01-MR	1
14	N60618	Flap Bracket - Right (Not Shown) - 45425-02-MR	1
15	N55892	Flap Hopper Side - 45432-05	2
16	N60649	Bracket Assembly - Lower Bearing - 46007-00-MR	2
17	N56133	Drum Assembly - 3" Idler - 47514-00	1
18	N56134	Drum Assembly - 3" Lagged - 47523-00	1
19	N49476	Flap Hopper - Back - 47640-01	1
20	80090-01	Tail Flap - Lower	1
21	81003-00-MR	Frame AS.	1
22	N62090	Rear Cover - Stainless - 81007-80 (for 23' SN 16188 and above)	1
23	81010-01-MR	Bearing Bracket	1
24	N60642	Canvas - Hopper W/3 Hole Side Rails - 81011-04 serial #17395 and Higher	1
25	81015-80	Cover - Rear	1
26	N55896	Door - Rear - 81016-80	1
27	N55897	Rear Door - Inlet - 81017-80	1
28	81018-00-MR	Handle Pivot	1
29	81021-01-MR	Cover - Transition	1
30	81022-81	Hold Down Flap	2
31	N64083	Strap Side - 81023-01-MR	2
32	N64084	Strap End - 81023-02-MR	1
33	N58617	Molded Drive Chain Cover Assembly - 81039-00 - Includes Cover, Hinge, Hold-Down Catch, Rubber Hold-Down and Hardware	1
34	N55889	Flow Guard - 81027-01	1
35	81028-01-MR	Flowguard Flap Support	1
36	N55891	Rubber Flap - 81029-01	1
37	81030-00-MR	Lower Bearing Bracket	2
38	N60615	Hopper Screen - 81034-00-MR	1
39	N60620	Hopper Screen Fine - 81063-01-MR	1
40	81040-00-MR	Transition Assembly - Lower	1
41	81071-01-MR	Bracket - Latch	1
42	N65796	Hopper Side Rail Right - 81072-00-MR	1
43	N65798	Hopper Side Rail Left - 81073-00-MR	1
44	N65746	Hopper Strap - Back - 81074-01-MR	1
31	N60643	Hopper Handle - 81075-00-MR	1
		Items Not Shown	
	N56105	Belt-Crescent Cup - 16 x 112 Lg - 24121-92 (for 23' SN 16188 and above)	1
	N49469	Belt Splice Kit - 24387-16 (Kit can be used with either belt as it only includes lacing parts)	1
	24254-01	Rubber Handled Draw Latch	1
	24356-01	Key - 1" Shaft	2
	24398-01	Heavy Roller Chain - #50	1
	24398-03	Link Connecting #50 Heavy	1
	N64090	Belt Splice Tool - 24387-01	
	N53224	Cleated Belt Splice Kit - Includes 24" cleated belt, splices, wire cable, crimp washers	
	24492-03	Hitch Pin - 1/2 x 4 Lg	1
	N49477	Cleated Belt Seal Flap - Left Low - 46105-01	1
	N49478	Cleated Belt Seal Flap - Right Low - 46105-02	1
	82081-11	Top Seal - Cleanout Door	1
	82081-12	Bottom Seal - Cleanout Door	1
		Items Not Shown - See Pages 12-53 to 12-55	

Conveyor - Lower End Group
25 ft Conveyor - Collapsible Hopper

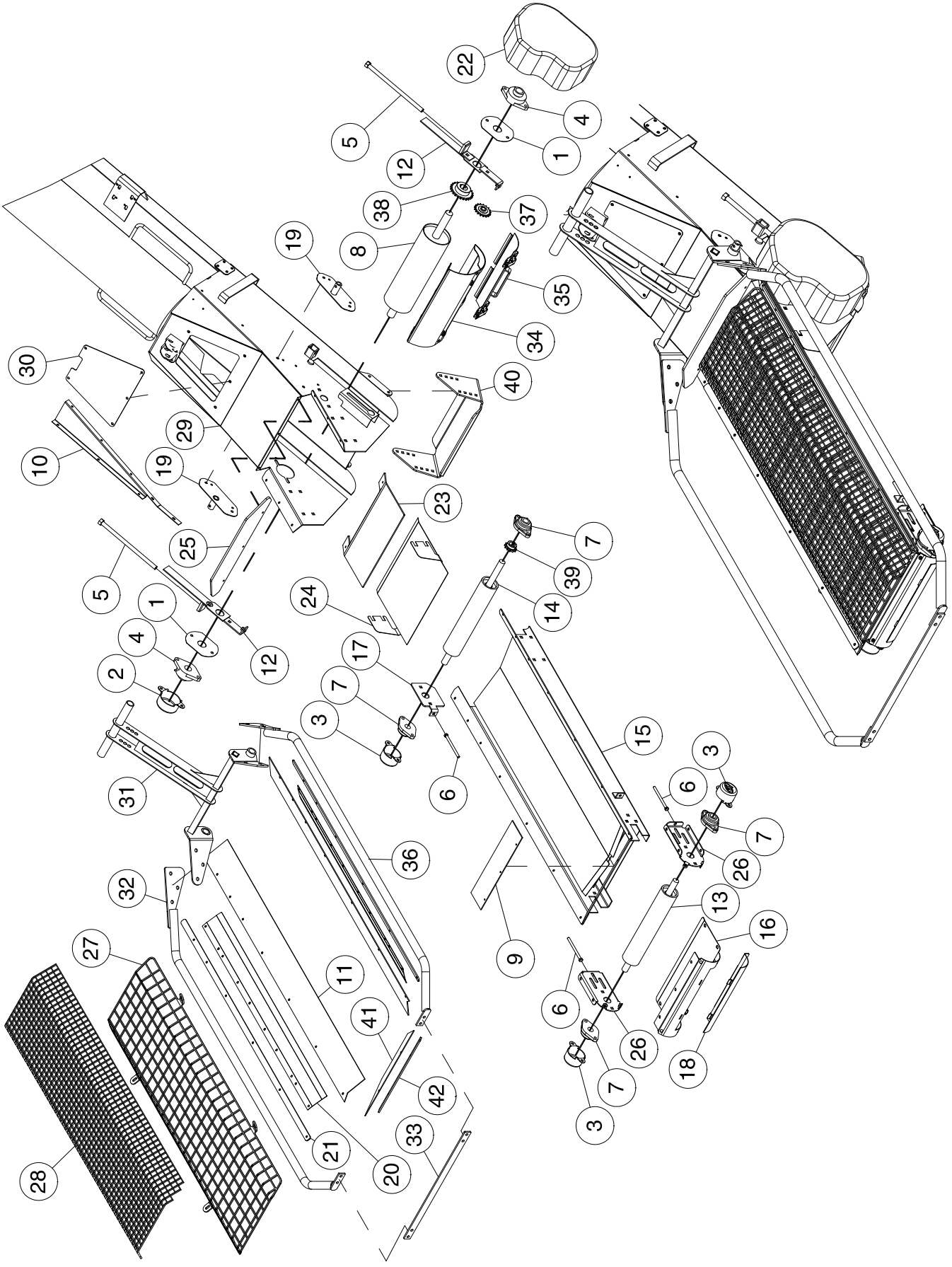

25 ft Conveyor - Lower End Group - Collapsible Hopper

Item	Part No.	Description	Qty
1	N60646	Bearing Plate - 20048-01	2
2	N58844	Cover - 1 1/4" Bearing - 23150-02	1
3	N58842	Cover - 1" Bearing - 23150-04	3
4	N49488	Bearing Flange - 24112-01	2
5	N55874	Tensioning Screw - 5/8 - 24115-01 ..... (N62929 - Square Nut - 5/8 - 24114-01)	2
6	N62327	Tap Bolt - 3/8 x 5 - 24208-01	3
7	N49486	Bearing Holder - 24336-01	4
8	N56132	Drum 5" - 1 1/4" Shaft Lagged - 24440-01	1
9	N49480	Lower Tail Flap - 28351-01	1
10	N60617	Flap Bracket - Left (Shown) - 45425-01-MR	1
	N60618	Flap Bracket - Right (Not Shown) - 45425-02-MR	1
11	N55892	Flap Hopper Side - 45432-05	2
12	N60649	Lower Braket Assembly - 46007-00-MR	2
13	N56133	Idler Roller Assembly - 47514-00	1
14	N56134	Drive Roller Assembly - 47523-00	1
15	81003-00-MR	Frame Assembly.	1
16	N62090	Feed Belt Door Frame - 81007-80	1
17	81010-01-MR	Bearing Bracket	1
18	N55897	Rear Door Inlet - 81017-80	1
19	81018-00-MR	Handle Pivot	2
20	81022-81	Hold Down	2
21	N64083	Side Strap - 81023-01-MR	2
22	N58617	Molded Drive Chain Cover Assembly - 81039-00	
		- Includes Cover, Hinge, Hold-Down Catch, Rubber Hold-Down and Hardware	1
23	N55889	Flowguard Flap - 81027-01	1
24	81028-01-MR	Flowguard Flap Support	1
25	N55891	Rubber Flap - 81029-01	1
26	81030-00-MR	Lower Bearing Bracket	2
27	N60615	Hopper Screen - 81034-00-MR	1
28	N60620	Hopper Screen Fine - 81063-01-MR	1
29	81083-00-MR	Lower Transition Assembly	1
30	81084-00-MR	Transition Cover	1
31	N69550	Hopper Handle - 81086-00-MR	1
32	N60645	Hopper Side Rail Right - 81087-00-MR	1
33	N64085	Back Hopper Strap - 81088-01-MR	1
34	81089-00	Rear Cover	1
35	81090-00	Rear Door	1
36	N60644	Hopper Side Rail Left - 81093-00-MR	1
37	N49483	Idler Sprocket - #50-15 - 24396-01	1
38	N56735	Sprocket - 50-25T - 24491-05	1
39	N56736	Sprocket - 50-13T - 24397-02	1
40	N58843	Tail Rest	1
41	N49476	Flap Hopper Back - 47640-01	1
42	N64084	End Strap - 81023-02-MR	1
		Items Not Shown	
	N65795	Canvas - Hopper W/3 Hole Side Rails - 81011-02	1
	N62290	Hopper Cover Kit - 81045-00	1
	N49477	Flap - 10" Left Side - 46105-01	1
	N49478	Flap - 10" Right Side - 46105-02	1
	24356-01	Key - 1/4"	2
	N56105	Belt Crescent Cup - 16" x 112" - 24121-92	1
	N49469	Belt Splice Kit - Lacing Parts Only - 24387-16	1
	N64090	Belt Splice Tool - 24387-01	
	N58827	Splice Pin 16" Belts - 24121-75	1
	24492-03	Hitch Pin	1
	24398-01	Heavy Roller Chain - #50	1
	24253-01	Hinge	1
	24254-01	Rubber Handled Draw Latch	1
	82024-01	Backer Hinge Plate	1
	81094-01	Top Seal - For Item 81089-00	2
	81094-03	Bottom Seal - For Item 81089-00	2
		Items Not Shown - See Pages 12-53 to 12-55	

Conveyor - Upper End Group
22 ft Conveyor

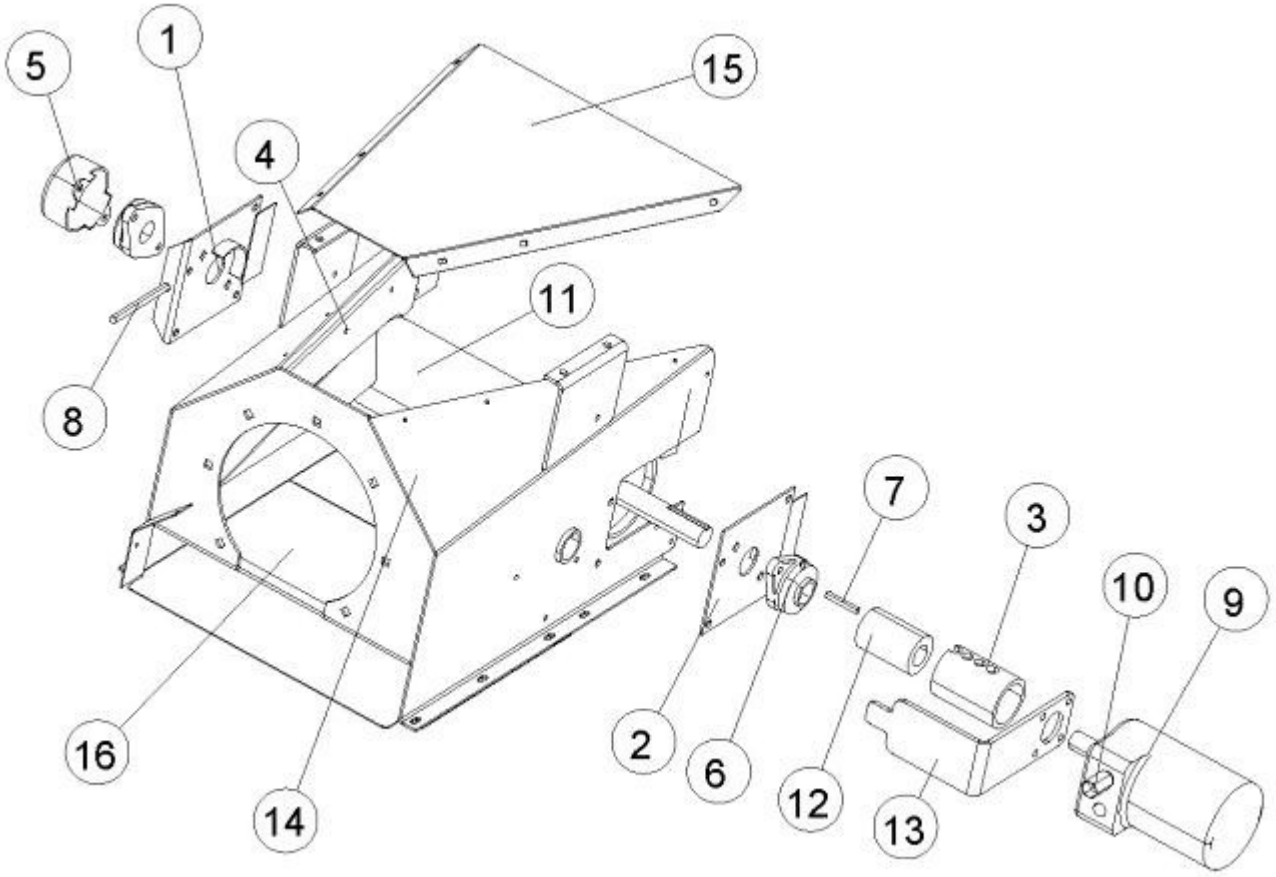

22ft Model 161022 (fixed rubber hopper) - SN#14809 to 16184 - Body portion length (round tube) 209.75”

Item	Part No.	Description	Qty
1	N60801	Plate Assembly - Bearing - Left - 20012-00	1
2	N60802	Plate Assembly - Bearing - Right - 20013-00	1
3	N53682	Tube - Shaft Guard - 20077-03	1
4	N49487	Flap - 22110-01	2
4	N58844	Bearing Cover - 1 1/4” Bearing - 23150-02	1
6	N49488	Bearing - Flange - 1 1/4” - 24112-01	2
7	24177-01	Key - 1 1/4” Shaft	1
8	N62327	Tap Bolt - 3/8 x 5 - 24208-01	1
9	N58845	Hydraulic Motor - 7.7 cu. in. - 24495-CaseDrain (Seal Kit - N55718)	1
10	N53729	Check Valve - ORB - 24369-02	1
11	N56132	Drum Assembly - 5” - 24440-01	1
12	N53683	Coupler - 24473-03	1
13	45076-01	Motor Mount - Hydraulic	1
14	46011-00	Upper Housing	1
15	N60806	Cover - Top - 46014-01	1
16	N60616	Cover - Bottom - 46034-01	1

Conveyor - Upper End Group
23 ft and 25 ft Conveyor - SN 16185 to 20521

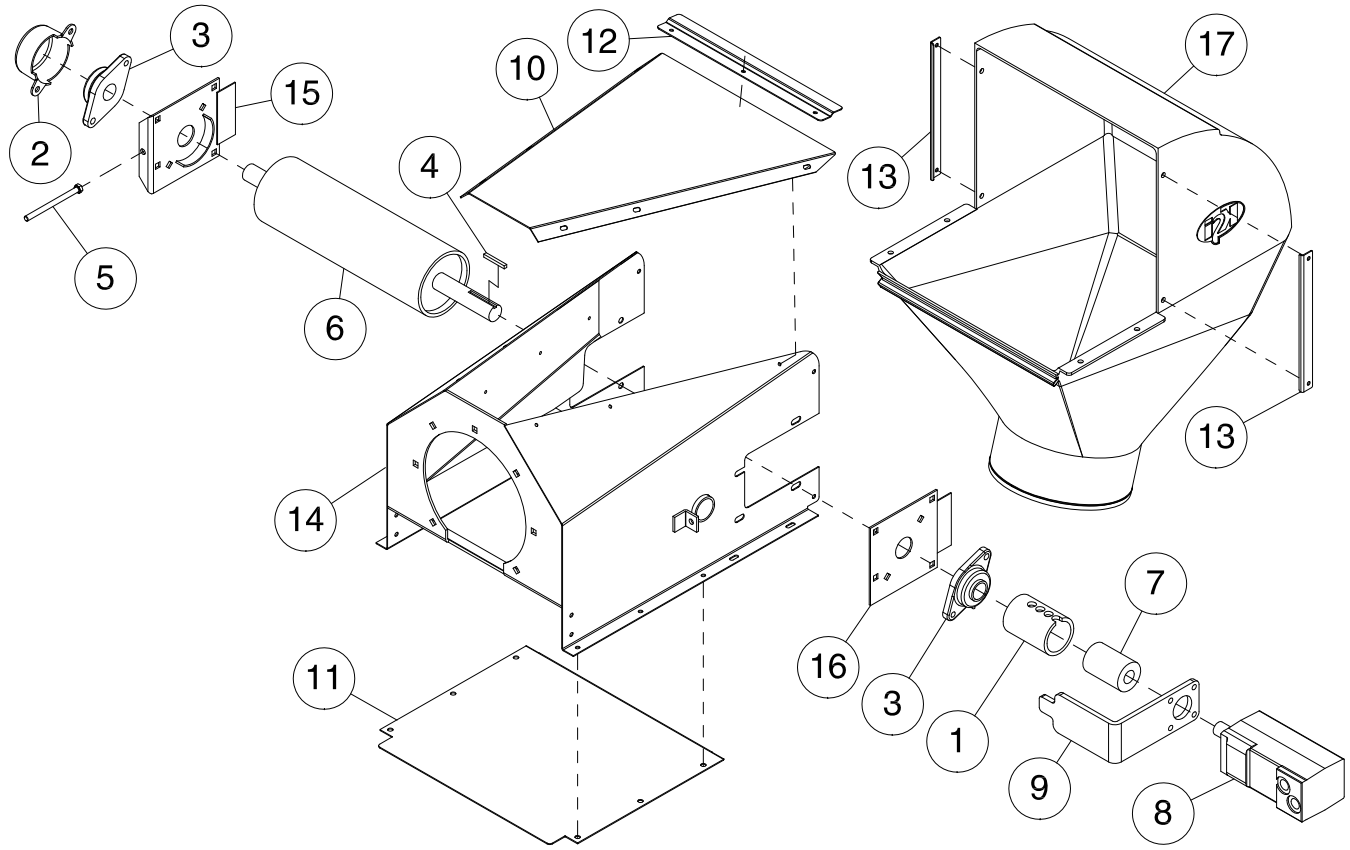

23ft Model 161023 (fixed rubber hopper) – SN#16185 to 16187 – Body portion length (round tube) 221.75”

23ft Model 161023 (collapsible canvas hopper) – SN#16188 to 20521 – Body portion length (round tube) 221.75”

25ft Model 161025 (collapsible canvas hopper) – SN#19046 to 19951

Item	Part No.	Description	Qty
1	N53682	Tube - Shaft Guard - 20077-03	1
2	N58844	Plastic Cover - 1-1/4" Bearing - 23150-02	1
3	N49488	Flange Bearing - 1-1/4" - 24112-01	2
4	24177-01	Key - 1 1/4 Shaft	1
5	N62327	Tap Bolt - 3/8 x 5 - 24208-01	1
6	N56132	Drum Assembly (5"), Lagged - 24440-01	1
7	N53683	Coupler - 24473-03	1
8	N58845	Hydraulic Motor - 7.7 cu. in. - 24495-CaseDrain (Seal Kit - N55718)	1
9	45076-01-MR	Motor Mount (Hyd)	1
10	N60806	Top Cover Panel - 46014-01-MR	1
11	N60616	Top Transition Bottom Cover - 46034-01-MR	1
12	N56129	Hold Down Strap Top - 81024-01-MR	1
13	N56131	Hold Down Strap Side - 81024-02-MR	2
14	81014-00	Upper Housing - Right Hand Drive - **23 ft**	1
	81085-00-MR	Head Assembly - Right Hand Drive - **25 ft**	1
15	N60801	Plate Assembly - Bearing - Left - 20012-00 - **23 ft**	1
	82213-00-MR	Plate, Bearing - Left - **25 ft**	1
16	N60802	Plate Assembly - Bearing - Right - 20013-00 - **23 ft**	1
	82214-00-MR	Plate, Bearing - Right - **25 ft**	1
17	N53679	Moulded Conveyor Spout - 10" - 85074-01	1
	N53729	Hydraulic Check Valve - SAE10 - ORB Thread - 24369-02 (Not Shown)	1
	24574-02	Hydraulic Plug - O-ring (Not Shown)	1

Conveyor - Upper End Group
23 and 25 ft Conveyor - SN 20522 and Later

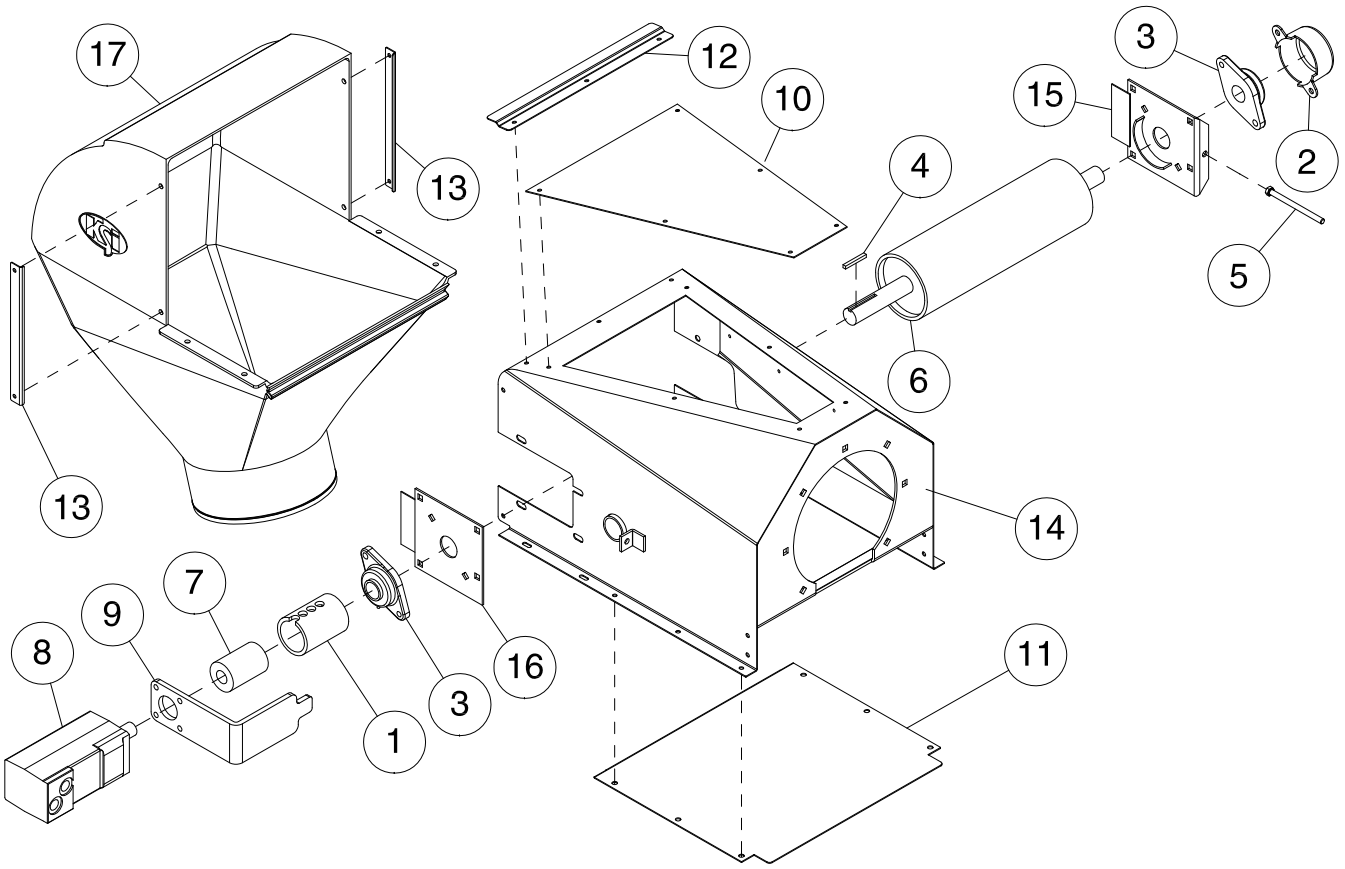

23ft Model 161023 (collapsible canvas hopper) – SN#20522 and later

25ft Model 161025 (collapsible canvas hopper) – SN#20527 and later

Item	Part No.	Description	Qty
1	N53682	Tube - Shaft Guard - 20077-03	1
2	N58844	Plastic Cover - 1-1/4" Bearing - 23150-02	1
3	N49488	Flange Bearing - 1-1/4" - 24112-01	2
4	24177-01	Key - 1 1/4 Shaft	1
5	N62327	Tap Bolt - 3/8 x 5 - 24208-01	1
6	N56132	Drum Assembly (5"), Lagged - 24440-01	1
7	N53683	Coupler - 24473-03	1
8	N58845	Hydraulic Motor - 7.7 cu. in. - 24495-CaseDrain (Seal Kit - N55718)	1
9	45076-01-MR	Motor Mount (Hyd)	1
10	81069-01-MR	Top Cover Panel	1
11	N60616	Top Transition Bottom Cover - 46034-01-MR	1
12	N56129	Hold Down Strap Top - 81024-01-MR	1
13	N56131	Hold Down Strap Side - 81024-02-MR	2
14	81065-00-MR	Head Assembly - Left Hand Drive	1
15	81066-00-MR	Plate, Bearing - Left	1
16	81067-00-MR	Plate, Bearing - Right	1
17	N53679	Moulded Conveyor Spout - 10" - 85074-01	1
	N53729	Hydraulic Check Valve - SAE10 - ORB Thread - 24369-02 (Not Shown)	1
	24574-02	Hydraulic Plug - O-ring (Not Shown)	1

KSI PN MORRIS PN	DESCRIPTION	DRAWING
23122-07 N53681	BRUSH FLAP SN 16187 & BELOW	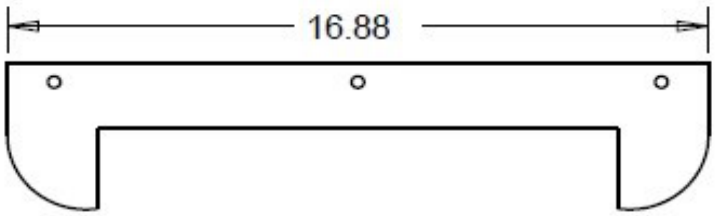
28252-01 N49479	HOPPER SIDE FLAP SN 14713 & BELOW	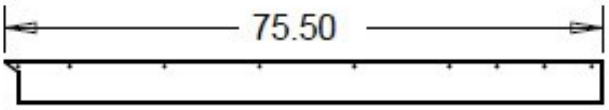
28351-01 N49480	TAIL FLAP LOWER	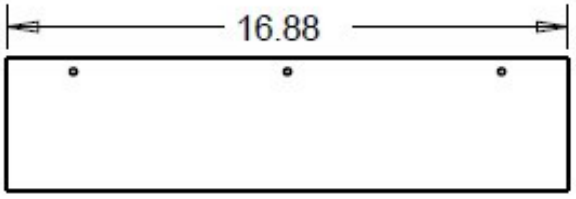
45419-01 N49481	FLOW GUARD FLAP SN 14713 & BELOW	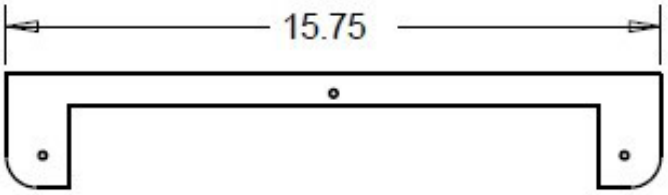
45423-04 N49475	RUBBER HOPPER SIDE RH OR LH SN 15184 & BELOW	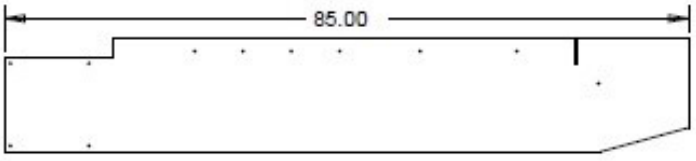
45423-06 N55886	BACK RUBBER HOPPER SN 15185— 16187	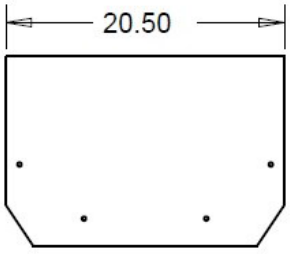

KSI PN MORRIS PN	DESCRIPTION	DRAWING
45423-08 N55887	RUBBER HOPPER SIDE SN 15185 — 16187	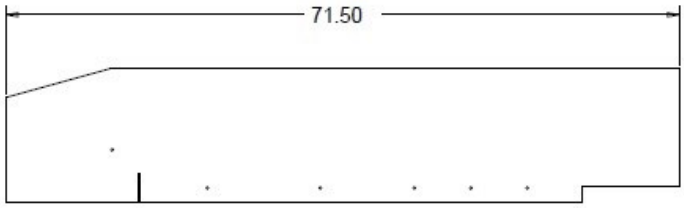
45429-01 N53710	FLAP LOWER DOOR SN 16187 & BELOW	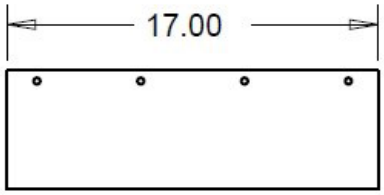
45432-01 N53711	SIDE HOPPER BELT SEAL SN 14714 TO SN 15184	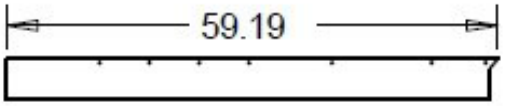
45432-03 N55888	SIDE HOPPER BELT SEAL SN 15185 TO SN 16187	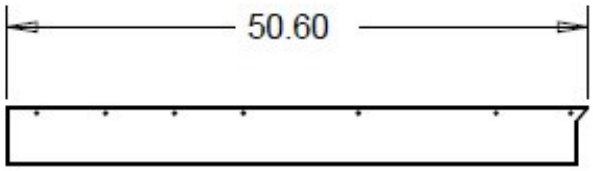
45432-05 N55892	SIDE HOPPER BELT SEAL SN 16188 & ABOVE	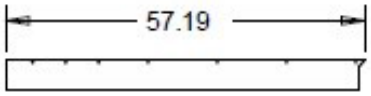
81032-01	FLAP 10” CONVEYOR LOWER LH	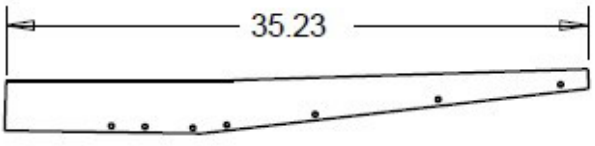
81032-02	FLAP 10” CONVEYOR LOWER RH	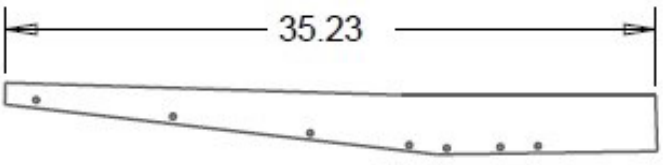

KSI PN MORRIS PN	DESCRIPTION	DRAWING
47640-01 N49476	FLAP HOPPER BACK	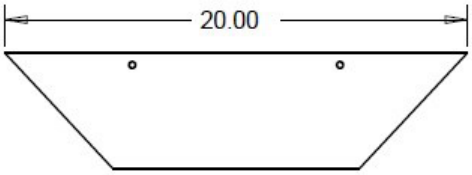
81027-01 N55889	FLOWGUARD SN 16188 & ABOVE	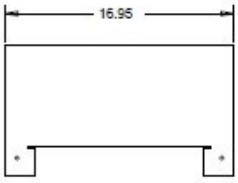
81029-01 N55891	FLAP SN 16188 & ABOVE	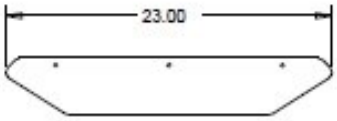
46105-01 N49477	CLEATED BELT SEAL FLAP LH SN 18352 & BELOW	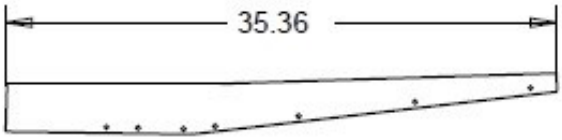
46105-02 N49478	CLEATED BELT SEAL FLAP RH SN 18352 & BELOW	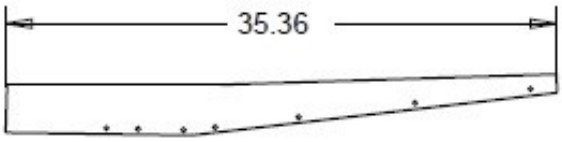
81074-01-MR N65746	COLLAPSIBLE HOPPER REAR RAIL SERIAL #17395 + HIGHER	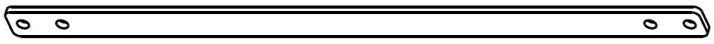 26-1/2" OVERALL LENGTH
81091-01-MR N65065	CONNECTOR PLATE	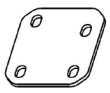
81092-01-MR N65066	SPACER PLATE	

Orbit Motor

Danfoss has discontinued the DH80 orbit motor. Morris Part number N29319. (Seal Kit N48071)

The replacement motor is **Danfoss OMPX 80.** Morris Part number **N72140. (Seal Kit N72139)**

This is a running change for the 2021 production year starting with the serial numbers listed below:

9365 BD is 9365211872 and newer
9365 BT is 9363211433 and newer
9450 BD is 9450213965 and newer
9450 BT is 9453213433 and newer
9535 BD is 9535216851 and newer
9445 BD is 9445215876 and newer
9445 BT is 9443215395 and newer
9550 BD is 9550214893 and newer
9550 BT is 9553214375 and newer
9650 BD is 9650213012 and newer
9650 BT is 9653212432 and newer
9800 BD is 9800217896 and newer (includes 2 and 3 tank models)
9800 BT is 9803217387 and newer (includes 2 and 3 tank models)
91000 BD IS 91000218871 and newer (includes 2 and 3 tank models)

Note: It is possible to have both series motors on the same Air Cart, so check each motor to determine which seal kits are required.



Danfoss OMPX 80
Morris Part number **N72140**
Seal Kit N72139



Danfoss DH 80
Morris Part number **N29319**
Seal Kit N48071

Section 13:
Hydraulics - Auger/Conveyor

Section Contents

10” Auger Hydraulics 13-2
Standard Arms 13-2
Hydraulic Assisted Arms 13-4
Extended Hopper 13-6
12” Auger Hydraulics 13-8
Extended Hopper - Prior to 2020 13-8
12” Auger Hydraulics 13-10
Extended Hopper - 2020 to Present 13-10
Hydraulic Assisted Arms and Locks 13-12
Conveyor Hydraulics 13-14
22 ft and 23 ft 13-14
25 ft - Prior to 2023 13-16
25 ft - 2023 to Present 13-18
Valve Block - N51275 13-20
Valve Block - N58555 13-21
Valve Block - N58349 13-22
Orbit Motor 13-23

10” Auger Hydraulics
Standard Arms

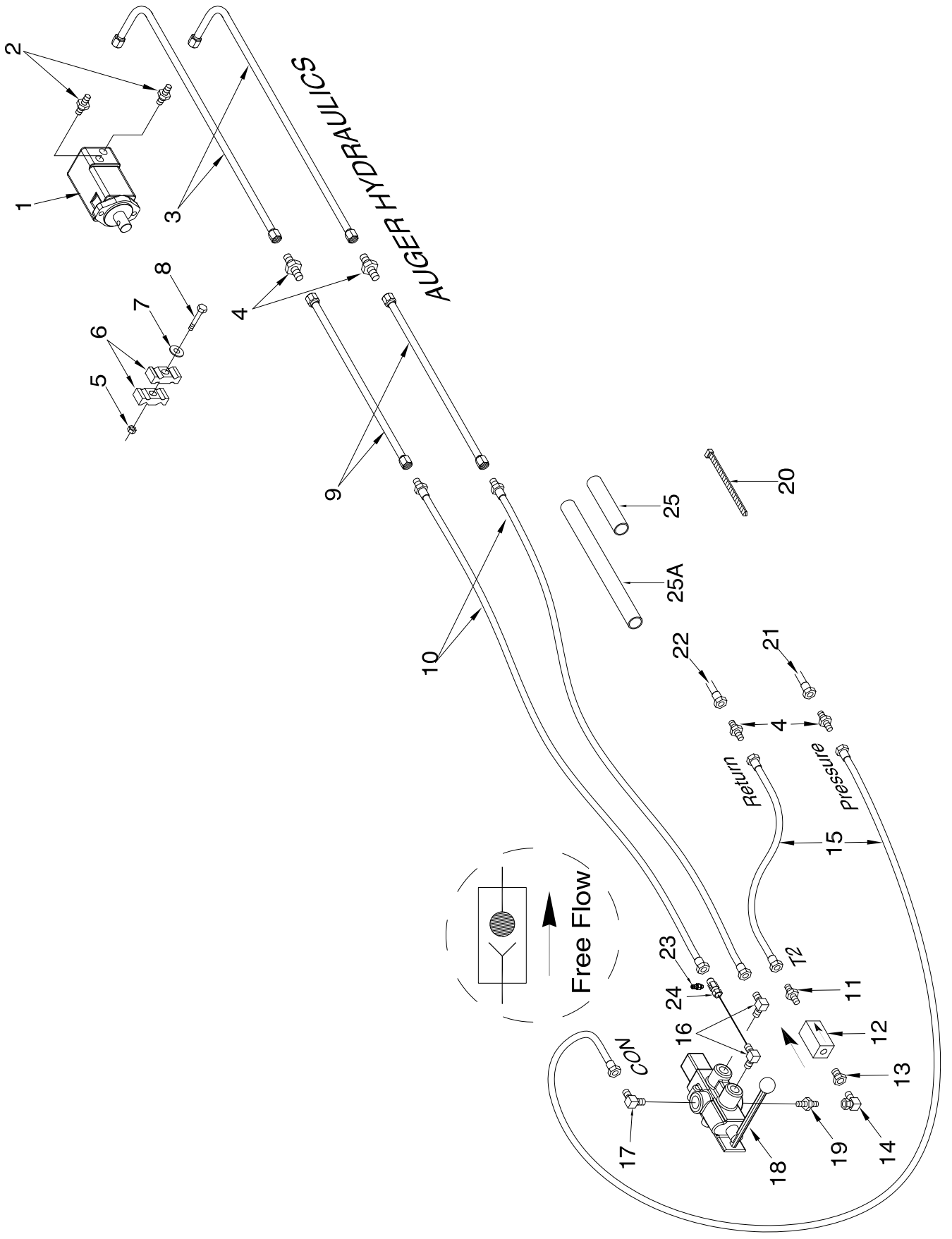

10” Auger Hydraulics - Auger Standard Arms

Item	Part No.	Description	Qty
1	N66479	Orbit Motor - 160cc - 2019 (Seal Kit # N56145)	1
	N49946	Orbit Motor - 202cc - Prior to 2019 (Seal Kit # N56145)	
2	N34505	Connector - 7/8-14 MJIC x 7/8-14 MORB	2
3	N36498	Oil Line - 5/8 x 104 Lg w/90 Degree Bend x 7/8-14 FJIC	2
4	C-4469	Connector - 7/8-14 MJIC	4
5	D-5279	Flange Locknut - 3/8 w/Center Lock	3
6	C-4698	Nylon Oil Line Clamp	6
7	W-538	Flat washer - 3/8	3
8	W-479	Hex Bolt - 3/8 x 2 1/4 Lg	3
9	C-4366	Oil Line - 5/8 x 74 Lg w/ 7/8-14 FJIC	2
10	C-4385	Hyd Hose - 1/2 x 24 Lg w/7/8-14 MJIC x 7/8-14 FJIC	2
11	C14840	Connector - 7/8-14 MJIC x 3/4-16 MORB	1
12	N34494	Check Valve w/3/4-16 FORB	1
13	N49460	Connector - 3/4-16 MORB x 7/8-14 FJIC	1
14	K-5806	90 Elbow - 7/8-14 MJIC x 7/8-14 FJIC	1
15	S29841	Hyd Hose - 1/2 x 222 w/ 7/8-14 FJIC	2
16	C15318	90 Elbow - 7/8-14 MJIC x 7/8-14 MORB	2
17	N34646	90 Elbow - 7/8-14 MJIC x 1 1/16-12 MORB	1
18	N53205	Control Valve - w/7/8-14 FORB x 1 1/16-12 FORB (Seal Kit N55676) (Handle N55677)	1
19	N47903	Connector - 7/8-14 (#10) MJIC x 1 1/16-12 (#12) MORB	1
20	D-4838	Tie Strap - 14 1/2 Lg	16
20A	D-4951	Tie Strap - 7 3/8 Lg	9
21	C-4468	Hyd Hose - 1/2 x 24 Lg w/7/8-14 FJIC	1
22	C26259	Hyd Hose - 1/2 x 108 Lg w/7/8-14 FJIC	1
23	N64583	Coupler - Test Port - 7/16-20 (#4) MORB	1
24	K62978	Tee - Gauge Port - 7/8-14 (#10) MJIC x 7/8-14 (#10) FJIC x 7/16-20 (#4) FORB	1
25	N51965	Hose Cover - 1 1/2 Dia x 60 Lg - Flexible	1
25A	N53932	Hose Cover - 1 1/2 Dia x 150 Lg - Flexible	1

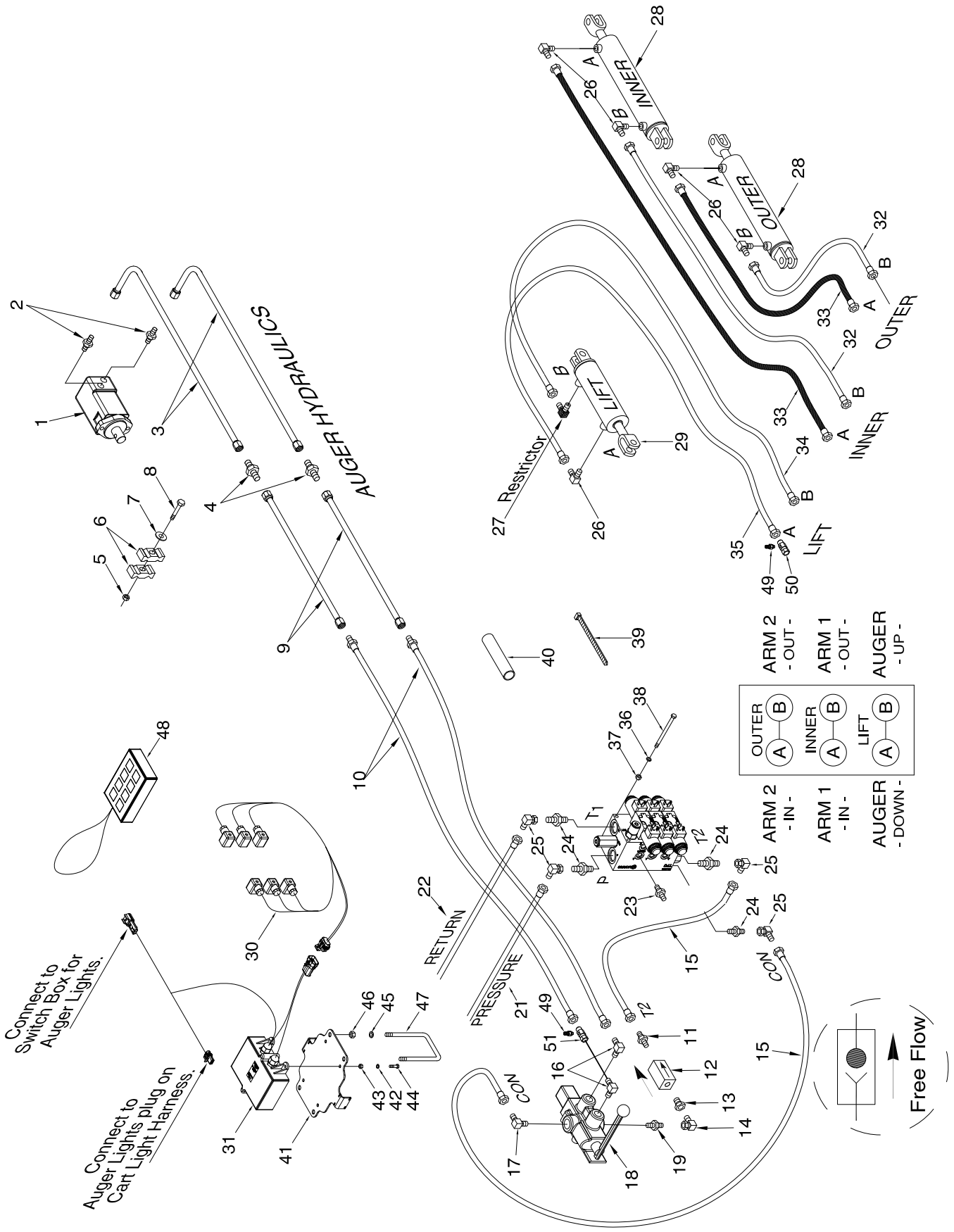
AUGER HYDRAULICS
INNER
OUTER
LIFT
Restrictor
RETURN
PRESSURE
CON
Free Flow
Connect to Switch Box for Auger Lights.
Connect to Auger Lights plug on Cart Light Harness.
ARM 2 - OUT -
ARM 1 - OUT -
AUGER - UP -
ARM 2 - IN -
ARM 1 - IN -
AUGER - DOWN -
OUTER
INNER
LIFT

10” Auger Hydraulics - Hydraulic Assisted Arms

Item	Part No.	Description	Qty
1	N66479	Orbit Motor - 160cc - 2019 (Seal Kit # N56145)	1
	N49946	Orbit Motor - 202cc - Prior to 2019 (Seal Kit # N56145)	
2	N34505	Connector - 7/8-14 MJIC x 7/8-14 MORB	2
3	N36498	Oil Line - 5/8 x 104 Lg w/90 Degree Bend x 7/8-14 FJIC	2
4	C-4469	Connector - 7/8-14 MJIC	2
5	D-5279	Flange Locknut - 3/8 w/Center Lock	3
6	C-4698	Nylon Oil Line Clamp	6
7	W-538	Flat washer - 3/8	3
8	W-479	Hex Bolt - 3/8 x 2 1/4 Lg	3
9	C-4366	Oil Line - 5/8 x 74 Lg w/ 7/8-14 FJIC	2
10	C-4385	Hyd Hose - 1/2 x 24 Lg w/7/8-14 MJIC x 7/8-14 FJIC	2
11	C14840	Connector - 7/8-14 MJIC x 3/4-16 MORB	1
12	N34494	Check Valve w/3/4-16 FORB	1
13	N49460	Connector - 3/4-16 MORB x 7/8-14 FJIC	1
14	K-5806	90 Elbow - 7/8-14 MJIC x 7/8-14 FJIC	1
15	S29841	Hyd Hose - 1/2 x 222 w/ 7/8-14 FJIC	2
16	C15318	90 Elbow - 7/8-14 MJIC x 7/8-14 MORB	2
17	N34646	90 Elbow - 7/8-14 MJIC x 1 1/16-12 MORB	1
18	N53205	Control Valve - w/7/8-14 FORB x 1 1/16-12 FORB (Seal Kit N55676) (Handle N55677)	1
19	N47903	Connector - 7/8-14 (#10) MJIC x 1 1/16-12 (#12) MORB	1
20	N58555	Valve - Solenoid - Hydraulic Assist Auger	1
21	C-4468	Hyd Hose - 1/2 x 24 Lg w/7/8-14 FJIC	1
22	C26259	Hyd Hose - 1/2 x 108 Lg w/7/8-14 FJIC	1
23	N29358	Connector - 9/16-18 MJIC x 9/16-18 MORB	6
24	N47903	Connector - 7/8-14 MJIC x 1 1/16-12 MORB	4
25	K-5806	90 Elbow - Swivel - 7/8-14 MJIC x 7/8-14 FJIC	4
26	N16143	90 Elbow - 9/16-18 MJIC x 9/16-18 MORB	5
27	N45212	Restrictor 90 Elbow - 9/16-18 MJIC x 9/16-18 MORB	1
28	C47188	Cylinder - 2 1/2 x 18 - Swing Arm (Seal Kit C51992)	2
29	C47335	Cylinder - 2 1/2 x 14 - Lift Auger (Seal Kit C51993)	1
30	N53081	Control Harness	1
31	N53020	Control Box - Wireless (Includes Item 48)	1
32	C15349	Hyd Hose - 1/4 x 48 Lg w/9/16-18 FJIC	2
33	S22406	Hyd Hose - 1/4 x 72 Lg w/9/16-18 FJIC	2
34	D17585	Hyd Hose - 1/4 x 176 Lg w/9/16-18 FJIC	1
35	D17845	Hyd Hose - 1/4 x 198 Lg w/9/16-18 FJIC	1
36	W-522	Lockwasher - 5/16	4
37	W-513	Hex Nut - 5/16	4
38	N15756	Hex Bolt - 5/16 x 5 Lg	4
39	D-4838	Tie Strap - 14 1/2 Lg	16
39A	D-4951	Tie Strap - 7 3/8 Lg	9
40	N59028	Hose Sleeve - 3”	1
41	N53023	Mount Plate - Control Box (Prior to 2018)	1
42	W-521	Lockwasher - 1/4	4
43	W-512	Hex Nut - 1/4	4
44	W-469	Hex Bolt - 1/4 x 3/4 Lg	4
45	W-523	Lockwasher - 3/8 (Prior to 2018)	4
46	W-514	Hex Nut - 3/8 (Prior to 2018)	4
47	N49642	U-Bolt - 3/8 x 3 x 5 UL (Prior to 2018)	2
48	N53085	Remote - Control Box	1
49	N64583	Coupler - Test Port - 7/16-20 (#4) MORB	2
50	N64582	Tee - Gauge Port - 9/16-18 (#6) MJIC x 9/16-18 (#6) FJIC x 7/16-20 (#4) FORB	1
51	K62978	Tee - Gauge Port - 7/8-14 (#10) MJIC x 7/8-14 (#10) FJIC x 7/16-20 (#4) FORB	1

10” Auger Hydraulics
Extended Hopper

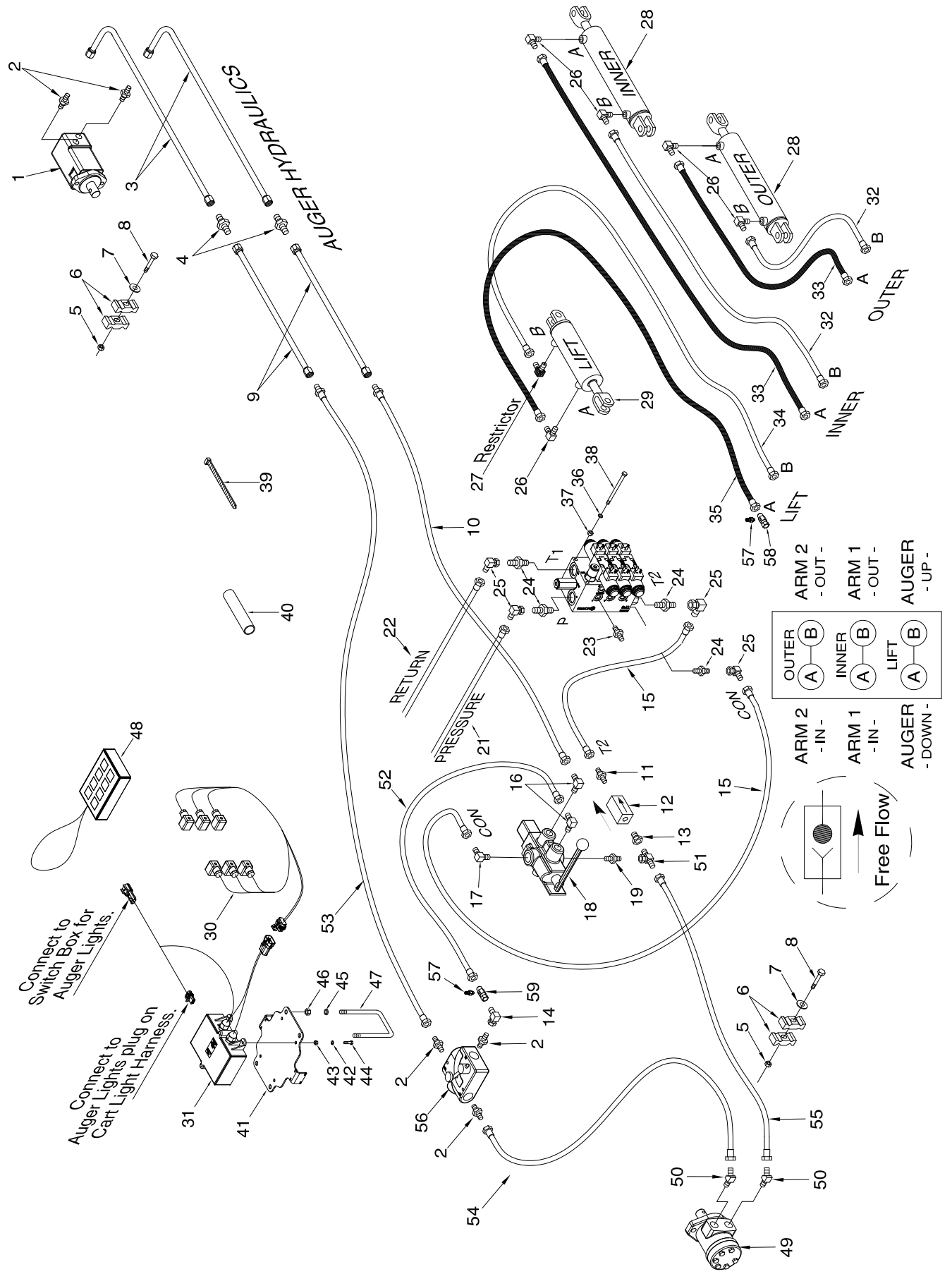

10” Auger Hydraulics - Extended Hopper			
Item	**Part No.**	**Description**	**Qty**
1	N66479	Orbit Motor - 160cc - 2019 (Seal Kit # N56145)	1
	N49946	Orbit Motor - 202cc - Prior to 2019 (Seal Kit # N56145)	
2	N34505	Connector - 7/8-14 MJIC x 7/8-14 MORB	5
3	N36498	Oil Line - 5/8 x 104 Lg w/90 Degree Bend x 7/8-14 FJIC	2
4	C-4469	Connector - 7/8-14 MJIC	2
5	D-5279	Flange Locknut - 3/8 w/Center Lock	3
6	C-4698	Nylon Oil Line Clamp	6
7	W-538	Flat washer - 3/8	3
8	W-479	Hex Bolt - 3/8 x 2 1/4 Lg	3
9	C-4366	Oil Line - 5/8 x 74 Lg w/ 7/8-14 FJIC	2
10	C-4385	Hyd Hose - 1/2 x 24 Lg w/7/8-14 MJIC x 7/8-14 FJIC	1
11	C14840	Connector - 7/8-14 MJIC x 3/4-16 MORB	1
12	N34494	Check Valve - 3/4-16 FORB	1
13	N49460	Connector - 3/4-16 MORB x 7/8-14 FJIC	1
14	K-5806	90 Elbow - 7/8-14 MJIC x 7/8-14 FJIC	1
15	S29841	Hyd Hose - 1/2 x 222 w/ 7/8-14 FJIC	2
16	C15318	90 Elbow - 7/8-14 MJIC x 7/8-14 MORB	2
17	N34646	90 Elbow - 7/8-14 MJIC x 1 1/16-12 MORB	1
18	N53205	Control Valve - w/7/8-14 FORB x 1 1/16-12 FORB (Seal Kit N55676) (Handle N55677)	1
19	N47903	Connector - 7/8-14 (#10) MJIC x 1 1/16-12 (#12) MORB	1
20	N58555	Valve - Solenoid - Hydraulic Assist Auger	1
21	C-4468	Hyd Hose - 1/2 x 24 Lg w/7/8-14 FJIC	1
22	C26259	Hyd Hose - 1/2 x 108 Lg w/7/8-14 FJIC	1
23	N29358	Connector - 9/16-18 MJIC x 9/16-18 MORB	6
24	N47903	Connector - 7/8-14 MJIC x 1 1/16-12 MORB	4
25	K-5806	90 Elbow - Swivel - 7/8-14 MJIC x 7/8-14 FJIC	4
26	N16143	90 Elbow - 9/16-18 MJIC x 9/16-18 MORB	5
27	N45212	Restrictor 90 Elbow - 9/16-18 MJIC x 9/16-18 MORB	1
28	C47188	Cylinder - 2 1/2 x 18 - Swing Arm (Seal Kit C51992)	2
29	C47335	Cylinder - 2 1/2 x 14 - Lift Auger (Seal Kit C51993)	1
30	N53081	Control Harness	1
31	N53020	Control Box - Wireless (Includes Item 48)	1
32	C15349	Hyd Hose - 1/4 x 48 Lg w/9/16-18 FJIC	2
33	S22406	Hyd Hose - 1/4 x 72 Lg w/9/16-18 FJIC	2
34	D17585	Hyd Hose - 1/4 x 176 Lg w/9/16-18 FJIC	1
35	D17845	Hyd Hose - 1/4 x 198 Lg w/9/16-18 FJIC	1
36	W-522	Lockwasher - 5/16	4
37	W-513	Hex Nut - 5/16	4
38	N15756	Hex Bolt - 5/16 x 5 Lg	4
39	D-4838	Tie Strap - 14 1/2 Lg	16
39A	D-4951	Tie Strap - 7 3/8 Lg	9
40	N59028	Hose Sleeve - 3”	1
41	N53023	Mount Plate - Control Box (Prior to 2018)	1
42	W-521	Lockwasher - 1/4	4
43	W-512	Hex Nut - 1/4	4
44	W-469	Hex Bolt - 1/4 x 3/4 Lg	4
45	W-523	Lockwasher - 3/8 (Prior to 2018)	4
46	W-514	Hex Nut - 3/8 (Prior to 2018)	4
47	N49642	U-Bolt - 3/8 x 3 x 5 UL (Prior to 2018)	2
48	N53085	Remote - Control Box	1
49	N29319	Orbit Motor - DANFOSS DH80 - Prior to 2021 **(See Page 13-23)**	1
	N72140	Orbit Motor - Danfoss OMPX 80 - 2021 to present **(See Page 13-23)**	1
50	N49599	45 Elbow - 7/8-14 MJIC x 7/8-14 MORB	2
51	F24559	Tee - (1) 7/8-14 fJIC x (2) 7/8-14 MJIC	1
52	N53208	Hyd Hose - 1/2 x 15 Lg w/7/8-14 FJIC	1
53	C-4387	Hyd Hose - 1/2 x 36 Lg w/7/8-14 MJIC x 7/8-14 FJIC	1
54	H-4410	Hyd Hose - 1/2 x 96 Lg w/7/8-14 FJIC	1
55	N53211	Hyd Hose - 1/2 x 120 Lg w/7/8-14 FJIC	1
56	N51985	Flow Control Valve	1
57	N64583	Coupler - Test Port - 7/16-20 (#4) MORB	2
58	N64582	Tee - Gauge Port - 9/16-18 (#6) MJIC x 9/16-18 (#6) FJIC x 7/16-20 (#4) FORB	1
59	K62978	Tee - Gauge Port - 7/8-14 (#10) MJIC x 7/8-14 (#10) FJIC x 7/16-20 (#4) FORB	1

12” Auger Hydraulics
Extended Hopper - Prior to 2020

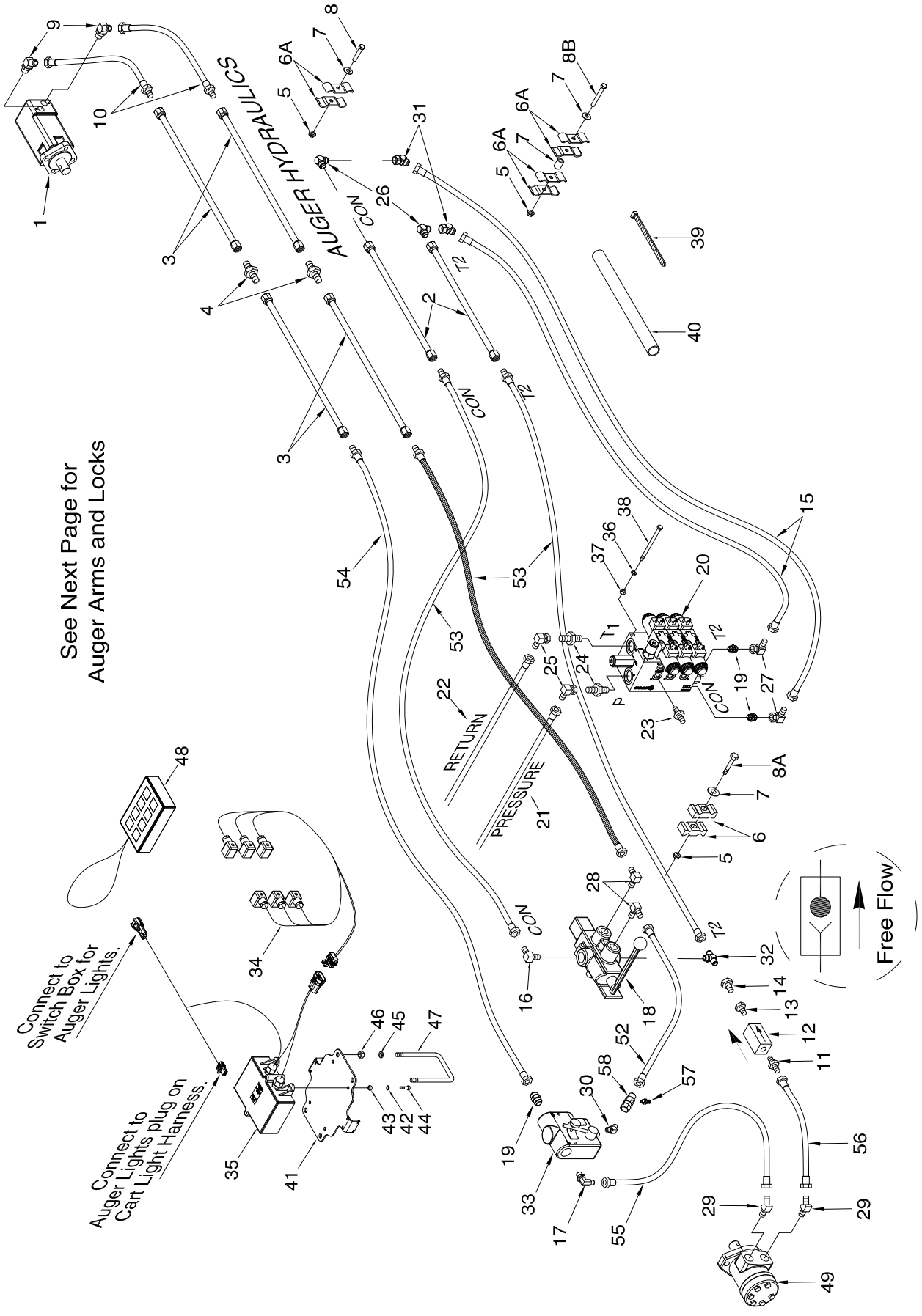

12” Auger Hydraulics - Extended Hopper - Prior to 2020			
Item	**Part No.**	**Description**	**Qty**
1	N55409	Hydraulic Motor - WS Series - 325 cc - 2750PSI - 20GPM -	1
2	N16347	Oil Line - 1 x 72 Lg w/ 1 5/16-12 FJIC	2
3	N58575	Oil Line - 1 x 96 Lg w/ 1 5/16-12 FJIC	4
4	N16346	Connector - 1 5/16-12 (#16) MJIC	2
5	S27987	Locknut - 3/8 Flange Center Lock	6
6	C-4698	Clamp - Nylon Oil Line	4
6A	D-4808	Clamp - Steel Oil Line	12
7	W-538	Flat washer - 3/8	6
8	W-477	Hex Bolt - 3/8 x 1 1/2 Lg	2
8A	W-479	Hex Bolt - 3/8 x 2 1/4 Lg	2
8B	D-5249	Hex Bolt - 3/8 x 3 1/4 Lg	2
9	N49599	45 Elbow - 7/8-14 MJIC x 7/8-14 MORB	2
10	N59022	Hyd Hose - 3/4 x 24 Lg w/1 5/16-12 MJIC x 7/8-14 FJIC swivel	2
11	C14840	Connector - 7/8-14 MJIC x 3/4-16 MORB	1
12	N34494	Check Valve - 3/4-16 FORB	1
13	N49460	Connector - 3/4-16 MORB x 7/8-14 FJIC	1
14	N19337	Connector - 7/8-14 (#10) MJIC x 1 1/16-12 (#12) FJIC	1
15	N58686	Hyd Hose - 3/4 x 252 w/ 1 5/16-12 FJIC swivel	2
16	N16359	90 Elbow - 1 1/16-12 MJIC x 1 1/16-12 MORB	1
17	N34646	90 Elbow - 7/8-14 MJIC x 1 1/16-12 MORB	1
18	N53205	Control Valve - w/7/8-14 FORB x 1 1/16-12 FORB (Seal Kit N55676) (Handle N55677)	1
19	N58602	Connector - 1 5/16-12 MJIC x 1 1/16-12 MORB	3
20	N58555	Valve - Solenoid - Hydraulic Assist Auger	1
21	C-4387	Auger - Hyd Hose - 1/2 x 36 Lg w/7/8-14 MJIC x 7/8-14 FJIC	1
22	C-4387	Auger - Hyd Hose - 1/2 x 36 Lg w/7/8-14 MJIC x 7/8-14 FJIC	1
23	N29358	Connector - 9/16-18 MJIC x 9/16-18 MORB	6
24	N47903	Connector - 7/8-14 MJIC x 1 1/16-12 MORB	2
25	K-5806	90 Elbow - Swivel - 7/8-14 MJIC x 7/8-14 FJIC	2
26	N58588	90 Elbow - 1 5/16-12 MJIC (#16)	2
27	N58616	90 Elbow - 1 5/16-12 MJIC (#16) x 1 5/16-12 FJIC (#16)	2
28	**N58590**	**90 Elbow - 1 1/16-12 MJIC (#12) x 7/8-14 MORB (#10)**	**2**
29	N49599	45 Elbow - 7/8-14 MJIC x 7/8-14 MORB	2
30	N31096	45 Elbow - 1 1/16-12 MJIC x 1 1/16-12 MORB	1
31	N36382	45 Elbow - Swivel - 1 5/16-12 FJIC (#16) x 1 5/16-12 MJIC (#16)	2
32	N16388	Tee - (1) 1 1/16-12 MORB x (2) 1 1/16-12 MJIC	1
33	N58601	Flow Control Valve	1
34	N53081	Control Harness	1
35	N53020	Control Box - Wireless (Includes Item 48)	1
36	W-522	Lockwasher - 5/16	4
37	W-513	Hex Nut - 5/16	4
38	N15756	Hex Bolt - 5/16 x 5 Lg	4
39	D-4838	Tie Strap - 14 1/2 Lg	16
39A	D-4951	Tie Strap - 7 3/8 Lg	9
40	N59028	Hose Cover - 3 Dia x 240 Lg - Flexible	1
41	N53023	Mount Plate - Control Box (Prior to 2018)	1
42	W-521	Lockwasher - 1/4	4
43	W-512	Hex Nut - 1/4	4
44	W-469	Hex Bolt - 1/4 x 3/4 Lg	4
45	W-523	Lockwasher - 3/8 (Prior to 2018)	4
46	W-514	Hex Nut - 3/8 (Prior to 2018)	4
47	N49642	U-Bolt - 3/8 x 3 x 5 UL (Prior to 2018)	2
48	N53085	Remote - Control Box	1
49	N29319	Orbit Motor (Seal Kit - N48071) **(See Page 13-23)**	1
52	N37900	Hyd Hose - 3/4 x 18 Lg w/1 1/16-12 FJIC	1
53	N59024	Hyd Hose - 3/4 x 34 Lg w/1 5/16-12 MJIC x 1 1/16-12 FJIC swivel	3
54	N59023	Hyd Hose - 3/4 x 48 Lg w/1 5/16-12 MJIC x 1 5/16-12 FJIC swivel	1
55	N53211	Hyd Hose - 1/2 x 120 Lg w/7/8-14 FJIC	1
56	C26345	Hyd Hose - 1/2 x 126 Lg w/7/8-14 FJIC	1
57	N64583	Coupler - Test Port - 7/16-20 (#4) MORB	1
58	K62979	Tee - Gauge Port - 1 1/16-12 (#12) MJIC x 1 1/16-12 (#12) FJIC x 7/16-20 (#4) FORB	1

12” Auger Hydraulics
Extended Hopper - 2020 to Present

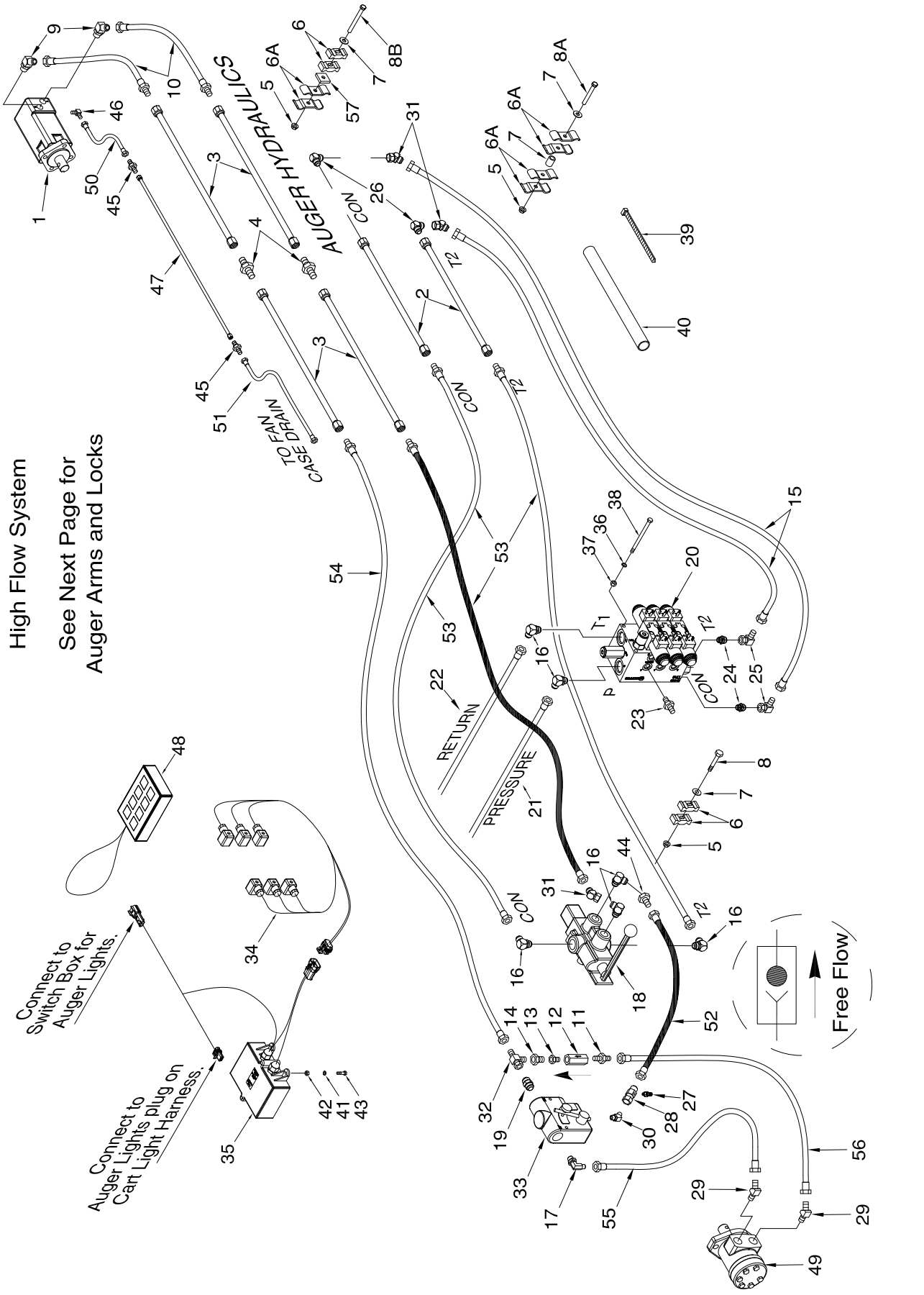

12” Auger Hydraulics - Extended Hopper - 2020 to Present			
Item	**Part No.**	**Description**	**Qty**
1	N58105	Hydraulic Motor - D9 Series - 300 cc - 3000PSI - 42GPM - (Seal Kit N71510)	1
2	N16347	Oil Line - 1 x 72 Lg w/ 1 5/16-12 FJIC	2
3	N58575	Oil Line - 1 x 96 Lg w/ 1 5/16-12 FJIC	4
4	N16346	Connector - 1 5/16-12 (#16) MJIC	2
5	S27987	Locknut - 3/8 Flange Center Lock	6
6	C-4698	Clamp - Nylon Oil Line	4
6A	D-4808	Clamp - Steel Oil Line	12
7	W-538	Flat washer - 3/8	6
8	W-479	Hex Bolt - 3/8 x 2 1/4 Lg.	2
8A	D-5249	Hex Bolt - 3/8 x 3 1/4 Lg.	2
8B	W-481	Hex Bolt - 3/8 x 3 1/2 Lg.	2
9	N58577	45 Elbow - 1 5/16-12 MJIC x 1 5/16-12 MORB	2
10	N58681	Hyd Hose - 3/4 x 24 Lg w/1 5/16-12 FJIC swivel ends	2
11	C14840	Connector - 7/8-14 MJIC x 3/4-16 MORB	1
12	N34494	Check Valve - 3/4-16 FORB	1
13	N49460	Connector - 3/4-16 MORB x 7/8-14 FJIC	1
14	N58642	Connector - 7/8-14 MJIC x 1-5/16-12 FJIC	1
15	N58686	Hyd Hose - 3/4 x 252 w/ 1 5/16-12 FJIC swivel	2
16	N58576	90 Elbow - 1 5/16-12 MJIC x 1 5/16-12 MORB	6
17	N34646	90 Elbow - 7/8-14 MJIC x 1 1/16-12 MORB	1
18	N58316	Control Valve - w/1 5/16-12 (#16) FORB Ports - 45 gpm	1
19	N58621	Connector - 1 5/16-12 MJIC (#16) x 1 5/16-12 MORB (#16)	1
20	N58349	Valve - Solenoid - Hydraulic Assist Auger - 45 gpm	1
21	N69213	Hyd Hose - 3/4 x 62 Lg - 1 5/16-12 MJIC (#16) x 1 5/16-12 FJIC swivel	2
22	* * * * *		
23	N29358	Connector - 9/16-18 MJIC x 9/16-18 MORB.	6
24	N58621	Connector - 1 5/16-12 MJIC (#16) x 1 5/16-12 MORB (#16)	2
25	N58616	90 Elbow - 1 5/16-12 MJIC (#16) x 1 5/16-12 FJIC (#16)	2
26	N58588	90 Elbow - 1 5/16-12 MJIC (#16)	2
27	N64583	Coupler - Test Port - 7/16-20 (#4) MORB	1
28	K62979	Tee - Gauge Port - 1 1/16-12 (#12) MJIC x 1 1/16-12 (#12) FJIC x 7/16-20 (#4) FORB	1
29	N49599	45 Elbow - 7/8-14 MJIC x 7/8-14 MORB	2
30	N31096	45 Elbow - 1 1/16-12 MJIC x 1 1/16-12 MORB	1
31	N36382	45 Elbow - Swivel - 1 5/16-12 FJIC (#16) x 1 5/16-12 MJIC (#16)	3
32	N19336	Tee - (1) 1 5/16-12 FJIC x (2) 1 5/16-12 MJIC (MMF)	1
33	N58601	Flow Control Valve	1
34	N53081	Control Harness	1
35	N53020	Control Box - Wireless (Includes Item 48)	1
36	W-522	Lockwasher - 5/16	4
37	W-513	Hex Nut - 5/16	4
38	S13337	Hex Bolt - 5/16 x 6 Lg.	4
39	D-4838	Tie Strap - 14 1/2 Lg.	16
39A	D-4951	Tie Strap - 7 3/8 Lg	9
40	N59028	Hose Cover - 3 Dia x 240 Lg - Flexible	1
41	W-521	Lockwasher - 1/4	4
42	W-512	Hex Nut - 1/4	4
43	W-469	Hex Bolt - 1/4 x 3/4 Lg.	4
44	N19338	Connector - 1 5/16-12 (#16) FJIC x 1 1/16-12 (#12) MJIC	1
45	H18269	Connector - 9/16-18 (#06) MJIC	2
46	N16143	90 Elbow - 9/16-18 (#06) MJIC x 9/16-18 (#06) MORB	1
47	F-5425	Oil Line - 3/8 x 112 Lg w/ 9/16-18 FJIC	1
48	N53085	Remote - Control Box	1
49	N29319	Orbit Motor - DANFOSS DH80 - Prior to 2021 (See Page **13-23**)	1
	N72140	Orbit Motor - Danfoss OMPX 80 - 2021 to present (See Page **13-23**)	1
50	S42969	Hyd Hose - 3/8 x 36 Lg w/ #6 9/16-18 FJIC	1
51	N69479	Hyd Hose - 3/8 x 290 Lg w/ #6 9/16-18 FJIC	1
52	N37900	Hyd Hose - 3/4 x 18 Lg w/1 1/16-12 FJIC	1
53	N58680	Hyd Hose - 3/4 x 34 Lg w/1 5/16-12 MJIC x 1 5/16-12 FJIC swivel	3
54	N59023	Hyd Hose - 3/4 x 48 Lg w/1 5/16-12 MJIC x 1 5/16-12 FJIC swivel	1
55	N53211	Hyd Hose - 1/2 x 120 Lg w/7/8-14 FJIC	1
56	C26345	Hyd Hose - 1/2 x 126 Lg w/7/8-14 FJIC	1
57	S31476	Plate - 1 1/2 x 1 1/2 x 1/2 thick	2

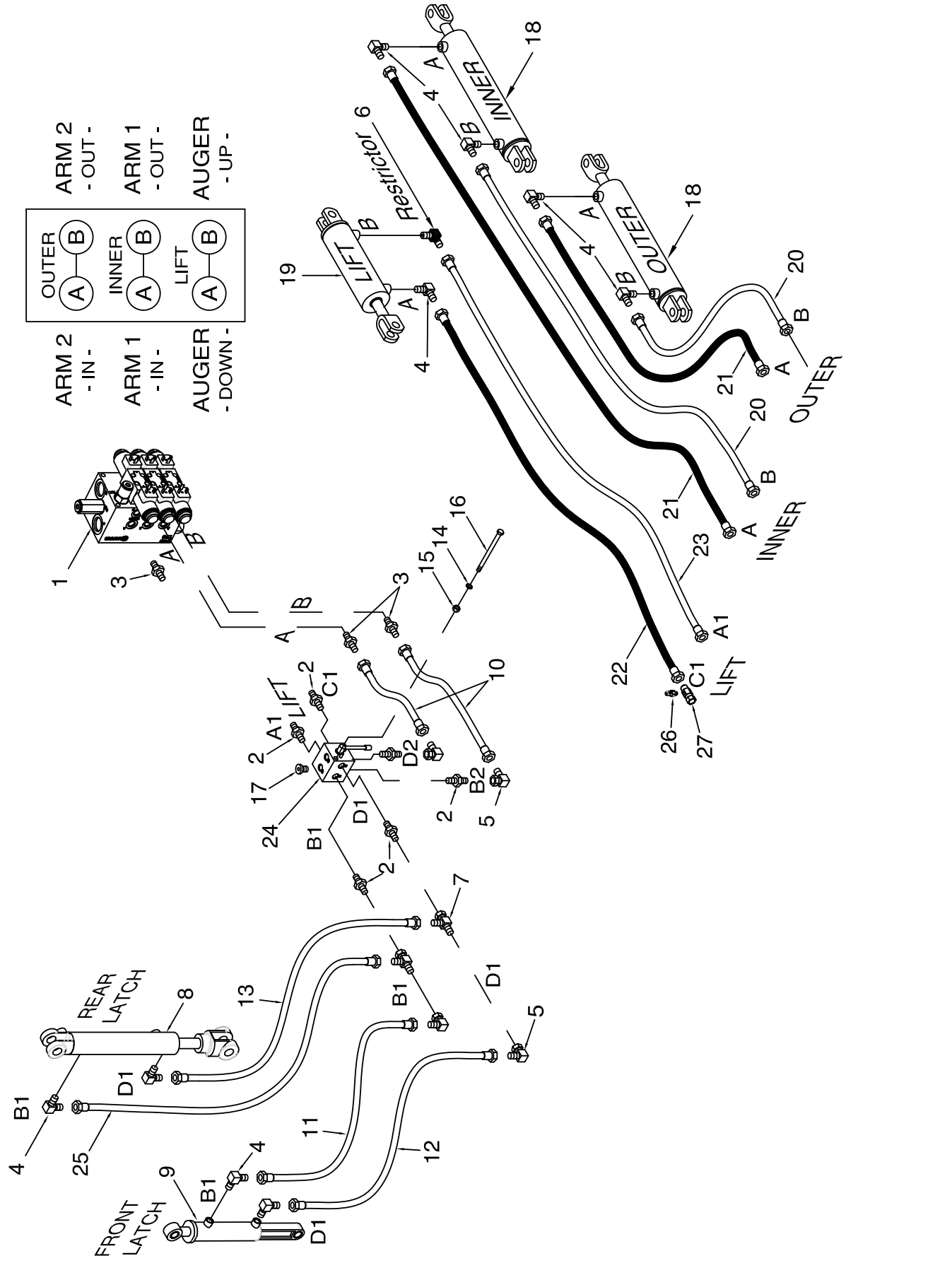
ARM 2 - OUT -
ARM 1 - OUT -
AUGER - UP -
OUTER
INNER
LIFT
ARM 2 - IN -
ARM 1 - IN -
AUGER - DOWN -
Restrictor
LIFT
INNER
OUTER
REAR LATCH
FRONT LATCH

12” Auger Hydraulics - Hydraulic Assisted Arms and Locks

Item	Part No.	Description	Qty
1	N58555	Valve - Solenoid - Hydraulic Assist Auger - Prior to 2020	1
	N58349	Valve - Solenoid - Hydraulic Assist Auger - 45 gpm - 2020 to Present	1
2	S34115	Connector - 9/16-18 MJIC x 7/16-20 MORB	6
3	N29358	Connector - 9/16-18 MJIC x 9/16-18 MORB	6
4	N16143	90 Elbow - 9/16-18 MJIC x 9/16-18 MORB	9
5	S29967	90 Elbow - Swivel - 9/16-18 (#06) FJIC x 9/16-18 (#06) MJIC	4
6	N45212	Restrictor 90 Elbow - 9/16-18 MJIC x 9/16-18 MORB	1
7	C-4403	Tee - (2) 9/16-18 MJIC x (1) 9/16-18 FJIC	2
8	C49924	Cylinder - 2 x 8 - Rear Lock (Seal Kit C51991)	1
9	C51153	Cylinder - 1 3/4 x 4 - Front Lock (Seal Kit C51152)	1
10	C14835	Hyd Hose - 1/4 x 36 Lg w/9/16-18 FJIC	2
11	W21962	Hyd Hose - 1/4 x 108 Lg w/9/16-18 FJIC	1
12	C26339	Hyd Hose - 1/4 x 120 Lg w/9/16-18 FJIC	1
13	D17585	Hyd Hose - 1/4 x 176 Lg w/9/16-18 FJIC	1
14	W-522	Lockwasher - 5/16	6
15	W-513	Hex Nut - 5/16	6
16	N19459	Hex Bolt - 5/16 x 3 Lg	2
17	N51953	Plug - #4 SAE - 7/16-20 MORB	2
18	C47188	Cylinder - 2 1/2 x 18 - Swing Arm (Seal Kit C51992)	2
19	C55740	Cylinder - 3 x 10 Stroke W 1-1/2 Shaft (Seal Kit C60622)(N70860 Repair/Seal Kit)	1
20	C15349	Hyd Hose - 1/4 x 48 Lg w/9/16-18 FJIC	2
21	S22406	Hyd Hose - 1/4 x 72 Lg w/9/16-18 FJIC	2
22	C26347	Hyd Hose - 1/4 x 216 Lg w/9/16-18 FJIC	1
23	F14659	Hyd Hose - 1/4 x 230 Lg w/9/16-18 FJIC	1
24	N49933	Selector Valve - Conveyor Lock (N60625 Handle/Knob)(	1
25	D17845	Hyd Hose - 1/4 x 198 Lg w/9/16-18 FJIC	1
26	N64583	Coupler - Test Port - 7/16-20 (#4) MORB	1
27	N64582	Tee - Gauge Port - 9/16-18 (#6) MJIC x 9/16-18 (#6) FJIC x 7/16-20 (#4) FORB	1

Conveyor Hydraulics
22 ft and 23 ft

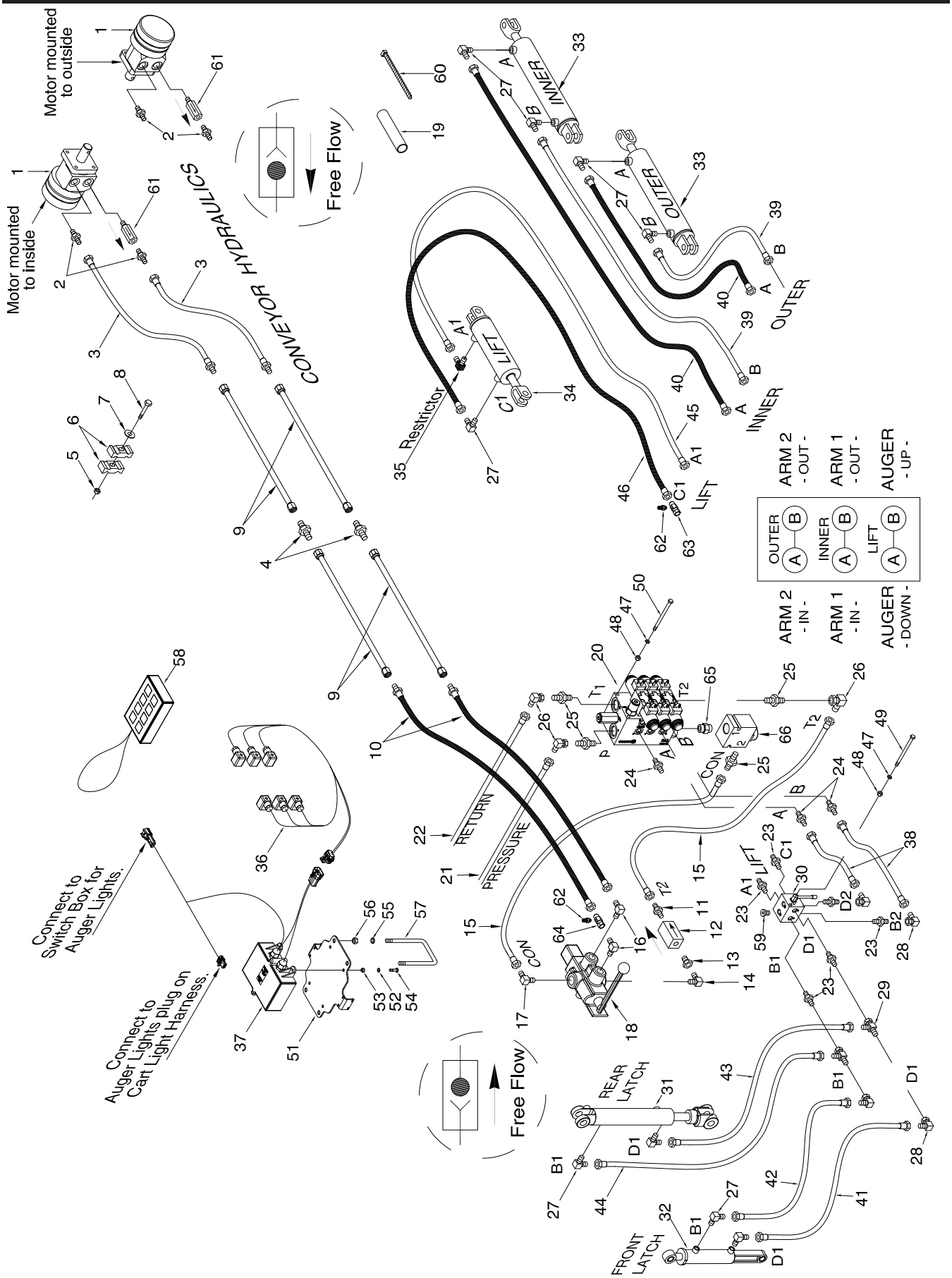

Conveyor Hydraulics - 22 ft and 23 ft

Item	Part No.	Description	Qty
1	N58845	Hydraulic Motor - 7.7 cu. in. - 24495-CaseDrain (Seal Kit - N55718)	1
2	N34505	Connector - 7/8-14 MJIC x 7/8-14 MORB	2
3	C-4389	Hyd Hose - 1/2 x 60 Lg w/ 7/8-14 FJIC x 7/8-14 FJIC	2
4	C-4469	Connector - 7/8-14 MJIC	2
5	D-5279	Flange Locknut - 3/8 w/Center Lock	3
6	C-4698	Nylon Oil Line Clamp	6
7	W-538	Flat Washer - 3/8	3
8	W-479	Hex Bolt - 3/8 x 2 1/4 Lg	3
9	C-4370	Oil Line - 5/8 x 128 Lg w/ 7/8-14 FJIC - 22 ft Conveyor	2
	C-4368	Oil Line - 5/8 x 88 Lg w/ 7/8-14 FJIC - 23 ft Conveyor	4
10	C-4385	Hyd Hose - 1/2 x 24 Lg w/7/8-14 MJIC x 7/8-14 FJIC - 22 ft Conveyor	2
	C26444	Hyd Hose - 1/2 x 16 Lg w/7/8-14 MJIC x 7/8-14 FJIC - 23 ft Conveyor	2
11	C14840	Connector - 7/8-14 MJIC x 3/4-16 MORB	1
12	N34494	Check Valve - w/3/4-16 FORB	1
13	N34503	Connector - 3/4-16 MORB x 3/4-16 FJIC	1
14	N34644	90 Elbow - 3/4-16 MJIC x 1/16-12 MORB	1
15	C26346	Hyd Hose - 1/2 x 240 w/ 7/8-14 FJIC	2
	S39538	Hyd Hose - 1/2 x 258 w/ 7/8-14 FJIC (9650)	2
16	C15318	90 Elbow - 7/8-14 MJIC x 7/8-14 MORB	2
17	N34646	90 Elbow - 7/8-14 MJIC x 1 1/16-12 MORB	1
18	N53205	Control Valve - w/7/8-14 FORB x 1 1/16-12 FORB (Seal Kit N55676) (Handle N55677)	1
19	N59028	Hose Sleeve - 3”	1
20	N58555	Valve - Solenoid - Hydraulic Assist Auger	1
21	C-4468	Hyd Hose - 1/2 x 24 Lg w/7/8-14 FJIC	1
22	C26259	Hyd Hose - 1/2 x 108 Lg w/7/8-14 FJIC	1
23	S34115	Connector - 9/16-18 MJIC x 7/16-20 MORB	6
24	N29358	Connector - 9/16-18 MJIC x 9/16-18 MORB	6
25	N47903	Connector - 7/8-14 MJIC x 1 1/16-12 MORB	4
26	K-5806	90 Elbow - Swivel - 7/8-14 MJIC x 7/8-14 FJIC	3
27	N16143	90 Elbow - 9/16-18 MJIC x 9/16-18 MORB	9
28	S29967	90 Elbow - Swivel - 9/16-18 (#06) FJIC x 9/16-18 (#06) MJIC	4
29	C-4403	Tee - (2) 9/16-18 MJIC x (1) 9/16-18 FJIC	2
30	N49933	Selector Valve - Conveyor Lock (N60625 Handle/Knob) (N70860 Repair/Seal Kit)	1
31	C49924	Cylinder - 2 x 8 - Rear Lock (Seal Kit C51991)	1
32	C51153	Cylinder - 1 3/4 x 4 - Front Lock (Seal Kit C51152)	1
33	C47188	Cylinder - 2 1/2 x 18 - Swing Arm (Seal Kit C51992)	2
34	C44745	Cylinder - 2 1/2 x 10 - Lift Auger (Seal Kit C51993)	1
35	N45212	Restrictor 90 Elbow - 9/16-18 MJIC x 9/16-18 MORB	1
36	N53081	Control Harness	1
37	N53020	Control Box - Wireless (Includes Item 58)	1
38	C-4552	Hyd Hose - 1/4 x 24 Lg w/9/16-18 FJIC - 9535	2
	C14835	Hyd Hose - 1/4 x 36 Lg w/9/16-18 FJIC - 9650 & 9800	2
39	C15349	Hyd Hose - 1/4 x 48 Lg w/9/16-18 FJIC	2
40	S22406	Hyd Hose - 1/4 x 72 Lg w/9/16-18 FJIC	2
41	S39506	Hyd Hose - 1/4 x 66 Lg w/9/16-18 FJIC - 9535	1
	H18267	Hyd Hose - 1/4 x 96 Lg w/9/16-18 FJIC - 9650 & 9800	1
42	H18266	Hyd Hose - 1/4 x 80 Lg w/9/16-18 FJIC - 9535	1
	W21962	Hyd Hose - 1/4 x 108 Lg w/9/16-18 FJIC - 9650 & 9800	1
43	S39503	Hyd Hose - 1/4 x 132 Lg w/9/16-18 FJIC	1
44	F14658	Hyd Hose - 1/4 x 150 Lg w/9/16-18 FJIC	1
45	D17585	Hyd Hose - 1/4 x 176 Lg w/9/16-18 FJIC	1
46	D17845	Hyd Hose - 1/4 x 198 Lg w/9/16-18 FJIC	1
47	W-522	Lockwasher - 5/16	6
48	W-513	Hex Nut - 5/16	6
49	N19459	Hex Bolt - 5/16 x 3 Lg	2
50	N15756	Hex Bolt - 5/16 x 5 Lg	4
51	N53023	Mount Plate - Control Box (Prior to 2018)	1
52	W-521	Lockwasher - 1/4	4
53	W-512	Hex Nut - 1/4	4
54	W-469	Hex Bolt - 1/4 x 3/4 Lg	4
55	W-523	Lockwasher - 3/8 (Prior to 2018)	4
56	W-514	Hex Nut - 3/8 (Prior to 2018)	4
57	N49642	U-Bolt - 3/8 x 3 x 5 UL (Prior to 2018)	2
58	N53085	Remote - Control Box	1
59	N51953	Plug - #4 SAE - 7/16-20 MORB	2
60	D-4838	Tie Strap - 14 1/2 Lg	16
60A	D-4951	Tie Strap - 7 3/8 Lg	9
61	N53729	Check Valve - 7/8-14 FORB	1
62	N64583	Coupler - Test Port - 7/16-20 (#4) MORB	2
63	N64582	Tee - Gauge Port - 9/16-18 (#6) MJIC x 9/16-18 (#6) FJIC x 7/16-20 (#4) FORB	1
64	K62978	Tee - Gauge Port - 7/8-14 (#10) MJIC x 7/8-14 (#10) FJIC x 7/16-20 (#4) FORB	1
65	N64719	Connector - 1 1/16-12 (#12) MORB	1
66	N62299	Flow Control Valve - 15GPM	1

Conveyor Hydraulics
25 ft - Prior to 2023

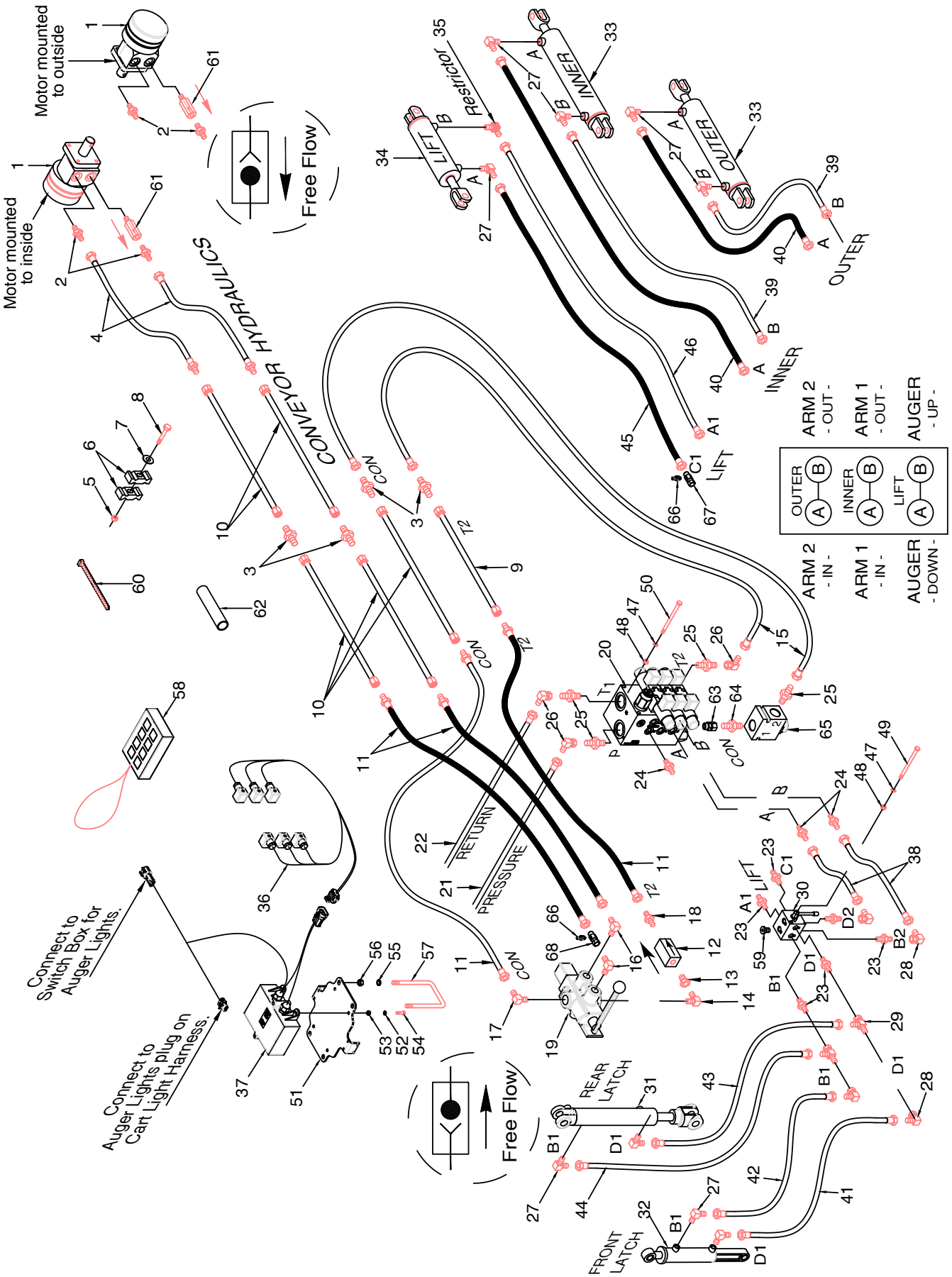

Conveyor Hydraulics - 25 ft - Prior to 2023

Item	Part No.	Description	Qty
1	N58845	Hydraulic Motor - 7.7 cu. in. - 24495-CaseDrain (Seal Kit - N55718)	1
2	N34505	Connector - 7/8-14 MJIC x 7/8-14 MORB	2
3	C-4469	Connector - 7/8-14 MJIC	4
4	C-4389	Hyd Hose - 1/2 x 60 Lg w/ 7/8-14 MJIC x 7/8-14 FJIC	2
5	D-5279	Flange Locknut - 3/8 w/Center Lock	3
6	C-4698	Nylon Oil Line Clamp	6
7	W-538	Flat Washer - 3/8	3
8	W-479	Hex Bolt - 3/8 x 2 1/4 Lg	3
9	C-4368	Oil Line - 5/8 x 88 Lg w/ 7/8-14 FJIC	1
10	C-4369	Oil Line - 5/8 x 96 Lg w/ 7/8-14 FJIC	5
11	C26444	Hyd Hose - 1/2 x 16 Lg w/7/8-14 MJIC x 7/8-14 FJIC	4
12	N34494	Check Valve - w/3/4-16 FORB	1
13	N34503	Connector - 3/4-16 MORB x 3/4-16 FJIC	1
14	N34644	90 Elbow - 3/4-16 MJIC x 1/16-12 MORB	1
15	S39538	Hyd Hose - 1/2 x 258 w/ 7/8-14 FJIC	2
16	C15318	90 Elbow - 7/8-14 MJIC x 7/8-14 MORB	2
17	N34646	90 Elbow - 7/8-14 MJIC x 1 1/16-12 MORB	1
18	C14840	Connector - 7/8-14 MJIC x 3/4-16 MORB	1
19	N53205	Control Valve - w/7/8-14 FORB x 1 1/16-12 FORB (Seal Kit N55676) (Handle N55677)	1
20	N58555	Valve - Solenoid - Hydraulic Assist Auger	1
21	C-4387	Auger - Hyd Hose - 1/2 x 36 Lg w/7/8-14 MJIC x 7/8-14 FJIC	1
22	C-4387	Auger - Hyd Hose - 1/2 x 36 Lg w/7/8-14 MJIC x 7/8-14 FJIC	1
23	S34115	Connector - 9/16-18 MJIC x 7/16-20 MORB	6
24	N29358	Connector - 9/16-18 MJIC x 9/16-18 MORB	6
25	N47903	Connector - 7/8-14 MJIC x 1 1/16-12 MORB	4
26	K-5806	90 Elbow - Swivel - 7/8-14 MJIC x 7/8-14 FJIC	4
27	N16143	90 Elbow - 9/16-18 MJIC x 9/16-18 MORB	9
28	S29967	90 Elbow - Swivel - 9/16-18 (#06) FJIC x 9/16-18 (#06) MJIC	4
29	C-4403	Tee - (2) 9/16-18 MJIC x (1) 9/16-18 FJIC	2
30	N49933	Selector Valve - Conveyor Lock (N60625 Handle/Knob) (N70860 Repair/Seal Kit)	1
31	C49924	Cylinder - 2 x 8 - Rear Lock (Seal Kit C51991)	1
32	C51153	Cylinder - 1 3/4 x 4 - Front Lock (Seal Kit C51152)	1
33	C47188	Cylinder - 2 1/2 x 18 - Swing Arm (Seal Kit C51992)	2
34	C55740	Cylinder - 3 x 10 - Lift Auger (Seal Kit C60622)	1
35	N45212	Restrictor 90 Elbow - 9/16-18 MJIC x 9/16-18 MORB	1
36	N53081	Control Harness	1
37	N53020	Control Box - Wireless (Includes Item 58)	1
38	K50993	Hyd Hose - 1/4 x 28 Lg w/9/16-18 FJIC	2
39	C15349	Hyd Hose - 1/4 x 48 Lg w/9/16-18 FJIC	2
40	S22406	Hyd Hose - 1/4 x 72 Lg w/9/16-18 FJIC	2
41	W21962	Hyd Hose - 1/4 x 108 Lg w/9/16-18 FJIC	1
42	C26339	Hyd Hose - 1/4 x 120 Lg w/9/16-18 FJIC	1
43	D17585	Hyd Hose - 1/4 x 176 Lg w/9/16-18 FJIC	1
44	D17845	Hyd Hose - 1/4 x 198 Lg w/9/16-18 FJIC	1
45	C26347	Hyd Hose - 1/4 x 216 Lg w/9/16-18 FJIC	1
46	F14659	Hyd Hose - 1/4 x 230 Lg w/9/16-18 FJIC	1
47	W-522	Lockwasher - 5/16	6
48	W-513	Hex Nut - 5/16	6
49	N19459	Hex Bolt - 5/16 x 3 Lg	2
50	N15756	Hex Bolt - 5/16 x 5 Lg	4
51	N53023	Mount Plate - Control Box (Prior to 2018)	1
52	W-521	Lockwasher - 1/4	4
53	W-512	Hex Nut - 1/4	4
54	W-469	Hex Bolt - 1/4 x 3/4 Lg	4
55	W-523	Lockwasher - 3/8 (Prior to 2018)	4
56	W-514	Hex Nut - 3/8 (Prior to 2018)	4
57	N49642	U-Bolt - 3/8 x 3 x 5 UL (Prior to 2018)	2
58	N53085	Remote - Control Box	1
59	N51953	Plug - #4 SAE - 7/16-20 MORB	2
60	D-4838	Tie Strap - 14 1/2 Lg	16
60A	D-4951	Tie Strap - 7 3/8 Lg	9
61	N53729	Check Valve - 7/8-14 FORB	1
62	N59028	Hose Sleeve - 3”	1
63	N37849	Connector - 1 1/16 MORB x 1 1/16 FJIC	1
64	N15990	Connector - 1 1/16 MJIC x 1 1/16 MORB	1
65	N62299	Flow Control Valve - 15GPM	1
66	N64583	Coupler - Test Port - 7/16-20 (#4) MORB	2
67	N64582	Tee - Gauge Port - 9/16-18 (#6) MJIC x 9/16-18 (#6) FJIC x 7/16-20 (#4) FORB	1
68	K62978	Tee - Gauge Port - 7/8-14 (#10) MJIC x 7/8-14 (#10) FJIC x 7/16-20 (#4) FORB	1

Conveyor Hydraulics
25 ft - 2023 to Present

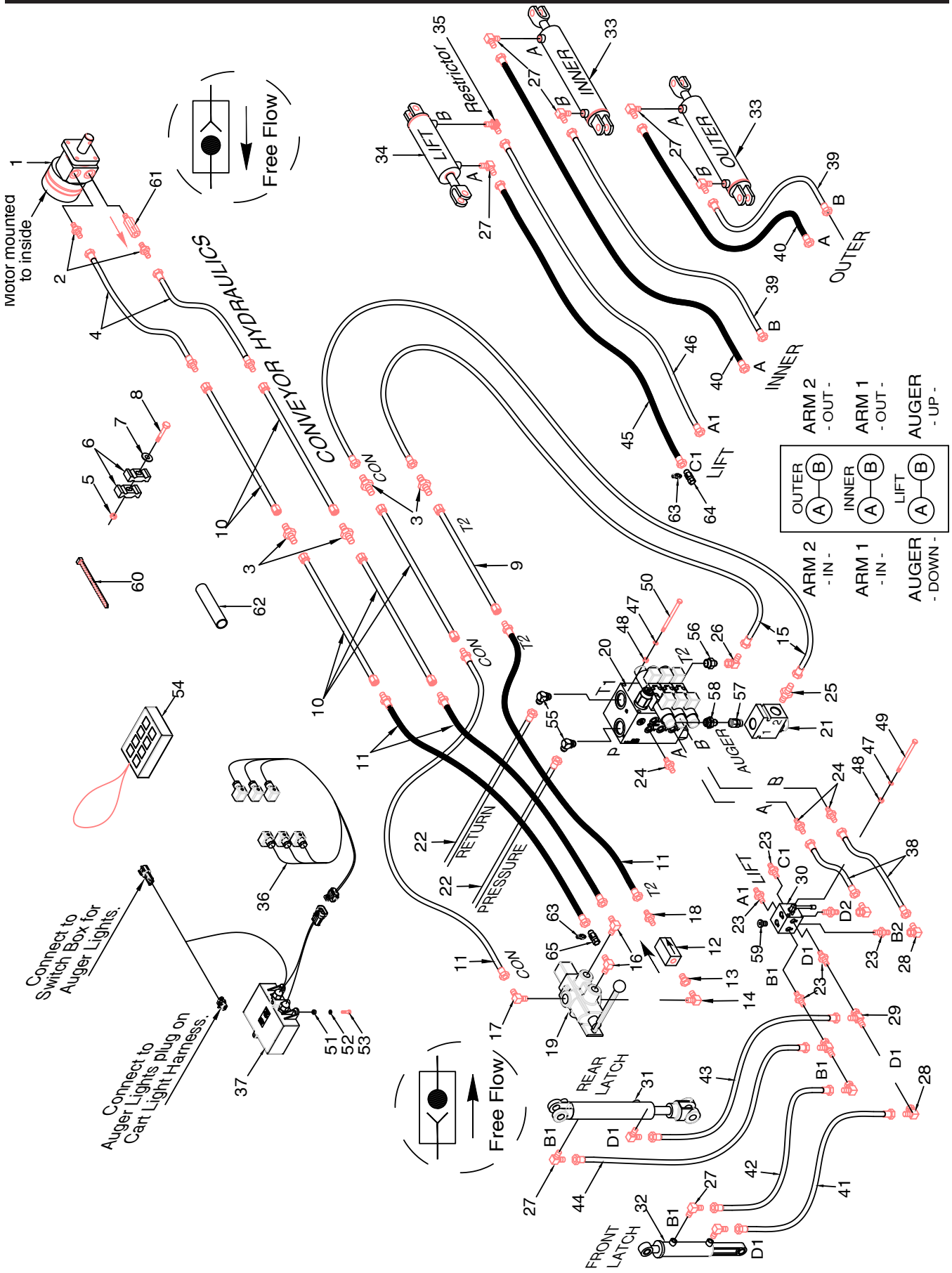

Conveyor Hydraulics - 25 ft - 2023 to Present

Item	Part No.	Description	Qty
1	N58845	Hydraulic Motor - 7.7 cu. in. - 24495-CaseDrain (Seal Kit - N55718)	1
2	N34505	Connector - 7/8-14 MJIC x 7/8-14 MORB	2
3	C-4469	Connector - 7/8-14 MJIC	4
4	C-4389	Hyd Hose - 1/2 x 60 Lg w/ 7/8-14 MJIC x 7/8-14 FJIC	2
5	D-5279	Flange Locknut - 3/8 w/Center Lock	3
6	C-4698	Nylon Oil Line Clamp	6
7	W-538	Flat Washer - 3/8	3
8	W-479	Hex Bolt - 3/8 x 2 1/4 Lg	3
9	C-4368	Oil Line - 5/8 x 88 Lg w/ 7/8-14 FJIC	1
10	C-4369	Oil Line - 5/8 x 96 Lg w/ 7/8-14 FJIC	5
11	C26444	Hyd Hose - 1/2 x 16 Lg w/7/8-14 MJIC x 7/8-14 FJIC	4
12	N34494	Check Valve - w/3/4-16 FORB	1
13	N34503	Connector - 3/4-16 MORB x 3/4-16 FJIC	1
14	N34644	90 Elbow - 3/4-16 MJIC x 1/16-12 MORB	1
15	S39538	Hyd Hose - 1/2 x 258 w/ 7/8-14 FJIC	2
16	C15318	90 Elbow - 7/8-14 MJIC x 7/8-14 MORB	2
17	N34646	90 Elbow - 7/8-14 MJIC x 1 1/16-12 MORB	1
18	C14840	Connector - 7/8-14 MJIC x 3/4-16 MORB	1
19	N53205	Control Valve - w/7/8-14 FORB x 1 1/16-12 FORB (Seal Kit N55676) (Handle N55677)	1
20	N58349	Valve - Solenoid - Hydraulic Assist Auger - 45 gpm	1
21	N62299	Flow Control Valve - 15GPM	1
22	N69213	Hyd Hose - 3/4 x 62 Lg - 1 5/16-12 FJIC (#16) x 1 5/16-12 MJIC (#16)	2
23	S34115	Connector - 9/16-18 MJIC x 7/16-20 MORB	6
24	N29358	Connector - 9/16-18 MJIC x 9/16-18 MORB	6
25	N47903	Connector - 7/8-14 MJIC x 1 1/16-12 MORB	1
26	K-5806	90 Elbow - Swivel - 7/8-14 MJIC x 7/8-14 FJIC	1
27	N16143	90 Elbow - 9/16-18 MJIC x 9/16-18 MORB	9
28	S29967	90 Elbow - Swivel - 9/16-18 (#06) FJIC x 9/16-18 (#06) MJIC	4
29	C-4403	Tee - (2) 9/16-18 MJIC x (1) 9/16-18 FJIC	2
30	N49933	Selector Valve - Conveyor Lock (N60625 Handle/Knob) (N70860 Repair/Seal Kit)	1
31	C49924	Cylinder - 2 x 8 - Rear Lock (Seal Kit C51991)	1
32	C51153	Cylinder - 1 3/4 x 4 - Front Lock (Seal Kit C51152)	1
33	C47188	Cylinder - 2 1/2 x 18 - Swing Arm (Seal Kit C51992)	2
34	C55740	Cylinder - 3 x 10 - Lift Auger (Seal Kit C60622)	1
35	N45212	Restrictor 90 Elbow - 9/16-18 MJIC x 9/16-18 MORB	1
36	N53081	Control Harness	1
37	N53020	Control Box - Wireless (Includes Item 58)	1
38	K50993	Hyd Hose - 1/4 x 28 Lg w/9/16-18 FJIC	2
39	C15349	Hyd Hose - 1/4 x 48 Lg w/9/16-18 FJIC	2
40	S22406	Hyd Hose - 1/4 x 72 Lg w/9/16-18 FJIC	2
41	W21962	Hyd Hose - 1/4 x 108 Lg w/9/16-18 FJIC	1
42	C26339	Hyd Hose - 1/4 x 120 Lg w/9/16-18 FJIC	1
43	D17585	Hyd Hose - 1/4 x 176 Lg w/9/16-18 FJIC	1
44	D17845	Hyd Hose - 1/4 x 198 Lg w/9/16-18 FJIC	1
45	C26347	Hyd Hose - 1/4 x 216 Lg w/9/16-18 FJIC	1
46	F14659	Hyd Hose - 1/4 x 230 Lg w/9/16-18 FJIC	1
47	W-522	Lockwasher - 5/16	6
48	W-513	Hex Nut - 5/16	6
49	N19459	Hex Bolt - 5/16 x 3 Lg	2
50	N15756	Hex Bolt - 5/16 x 5 Lg	4
53	W-512	Hex Nut - 1/4	4
52	W-521	Lockwasher - 1/4	4
53	W-469	Hex Bolt - 1/4 x 3/4 Lg	4
54	N53085	Remote - Control Box	1
55	N58576	90 Elbow - 1 5/16-12 MJIC x 1 5/16-12 MORB	2
56	C42312	Connector - 7/8-14 (#10) MJIC x 1 5/16-12 (#16) MORB	1
57	N37849	Connector - 1 1/16 MORB x 1 1/16 FJIC	1
58	11356	Connector - 1 5/16 MORB x 1 1/16 MJIC	1
59	N51953	Plug - #4 SAE - 7/16-20 MORB	2
60	D-4838	Tie Strap - 14 1/2 Lg	16
60A	D-4951	Tie Strap - 7 3/8 Lg	9
61	N53729	Check Valve - 7/8-14 FORB	1
62	N59028	Hose Sleeve - 3”	1
63	N64583	Coupler - Test Port - 7/16-20 (#4) MORB	2
64	N64582	Tee - Gauge Port - 9/16-18 (#6) MJIC x 9/16-18 (#6) FJIC x 7/16-20 (#4) FORB	1
65	K62978	Tee - Gauge Port - 7/8-14 (#10) MJIC x 7/8-14 (#10) FJIC x 7/16-20 (#4) FORB	1

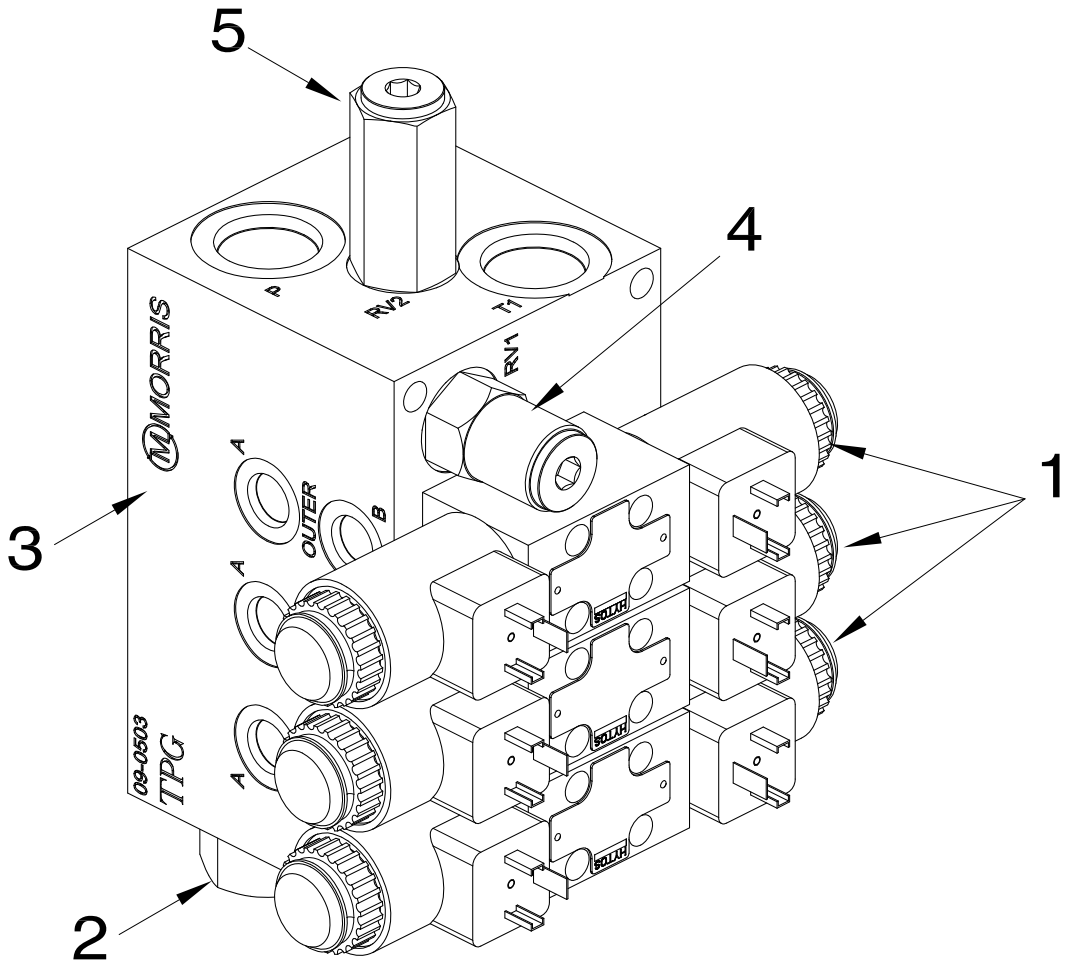

Item	Part No.	Description	Qty
1	N51969	Solenoid Valve (29459600) **(N64111 - Cap)**	3
2	N51971	Priority Valve - Flow Control Cartridge (131844)	1
3	N51972	Custom HIC Manifold (12-0627-PEC)	1
4	N51973	Relief Valve Cartridge (132810.250) (CP210-2-B-0-A-C-250) 30 GPM	1
5	N51975	Relief Valve Cartridge (131275.050) (CP210-1-B-0-A-B-050) 11 GPM	1
	N51275	Valve Block Assembly (Includes all above items)	

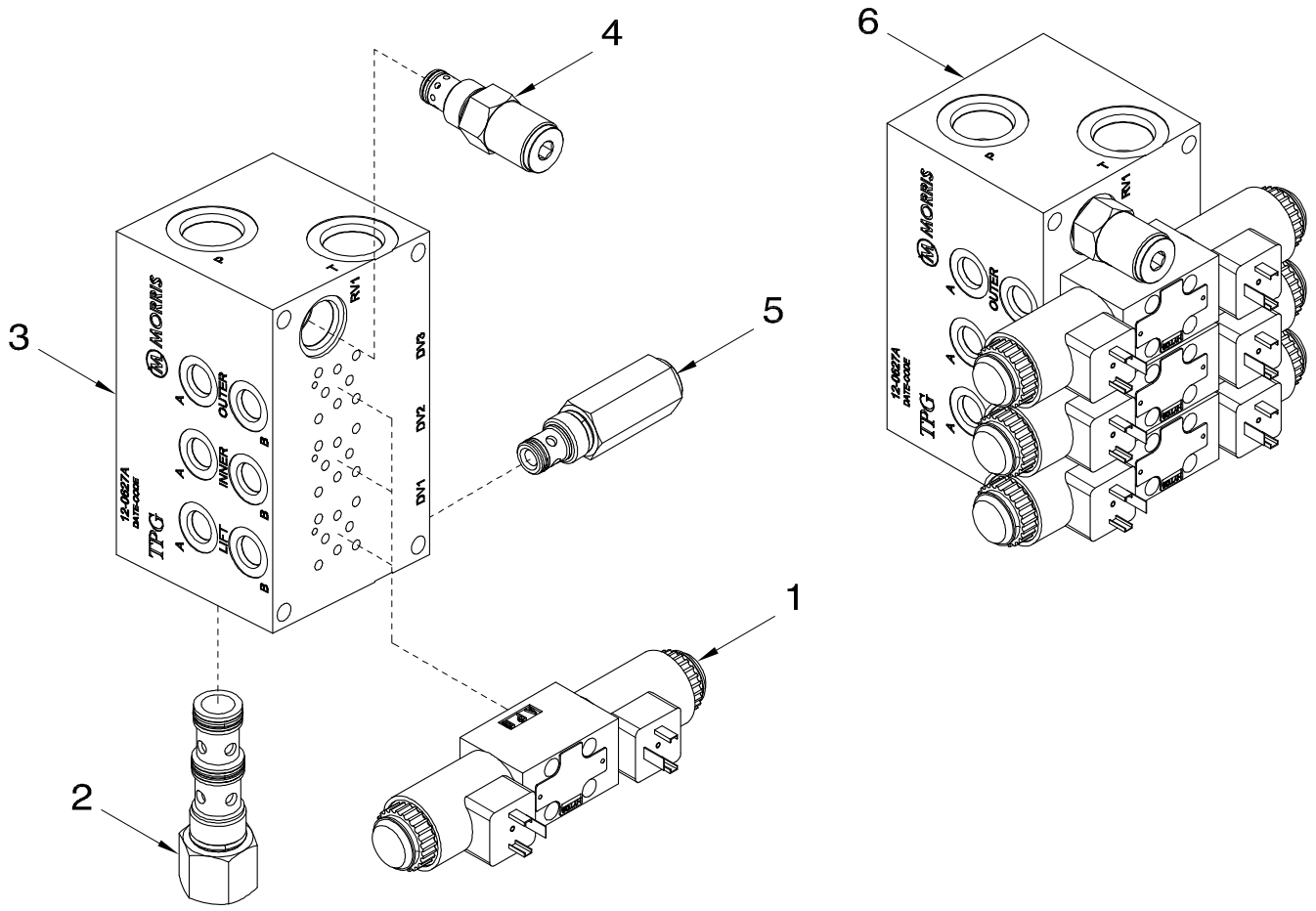

Item	Part No.	Description	Qty
1	N51969	Solenoid Valve (29459600) **(N64111 - Cap)**	3
2	N51971	Priority Valve - Flow Control Cartridge (131844)	1
3	N58544	Custom HIC Manifold (12-0627-PEC Rev-A)	1
4	N51973	Relief Valve Cartridge (132810.250) (CP210-2-B-0-A-C-250) 30 GPM	1
5	N58543	Relief Valve Cartridge (83013351) (CP210-1-B-O-A-D-100) 12 GPM	1
6	N58555	Valve Block Assembly (Includes all above items)	

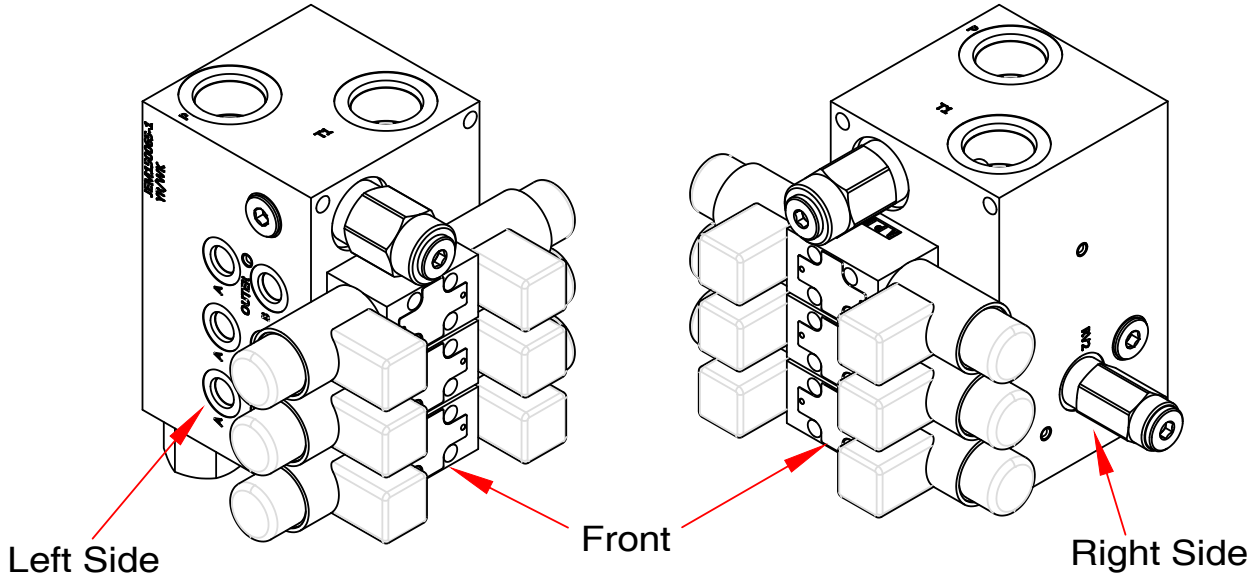

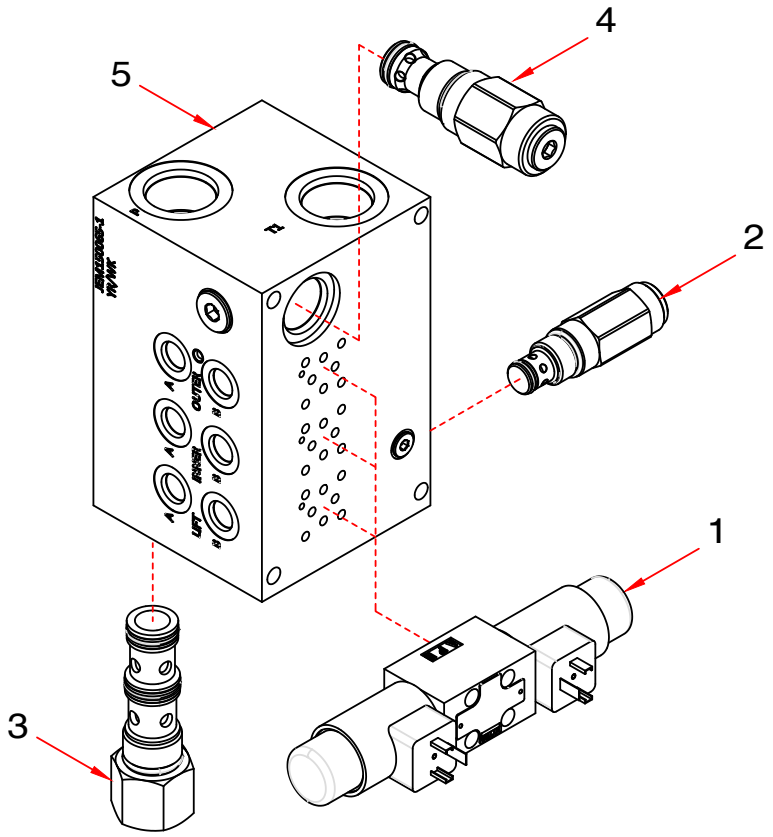

Item	Part No.	Description	Qty
		12" Auger Valve Block - 2020 to Present	
1	N69992	Solenoid Valve (150065-A) (RPE3-04C11/01200EIN2)	3
2	N69994	Relief Valve Cartridge (RV10-20H-0-N-12/5)	1
3	N69996	Priority Valve - Flow Control Cartridge (FR16-30F-0-N-1.0)	1
4	N69998	Relief Valve Cartridge (RV12-26H-0-N-35/25)	1
5	N58349	Valve Block Assembly - 45gpm (Includes all above items)	

Orbit Motor

IMPORTANT: Confirm with customer which series motor they have.

Danfoss has discontinued the DH80 orbit motor. Morris Part number N29319. (Seal Kit N48071)

The replacement motor is **Danfoss OMPX 80.** Morris Part number **N72140. (Seal Kit N72139)**

This is a running change for the 2021 production year starting with the serial numbers listed below:

9365 BD is 9365211872 and newer
9365 BT is 9363211433 and newer
9450 BD is 9450213965 and newer
9450 BT is 9453213433 and newer
9535 BD is 9535216851 and newer
9445 BD is 9445215876 and newer
9445 BT is 9443215395 and newer
9550 BD is 9550214893 and newer
9550 BT is 9553214375 and newer
9650 BD is 9650213012 and newer
9650 BT is 9653212432 and newer
9800 BD is 9800217896 and newer (includes 2 and 3 tank models)
9800 BT is 9803217387 and newer (includes 2 and 3 tank models)
91000 BD IS 91000218871 and newer (includes 2 and 3 tank models)

Note: It is possible to have both series motors on the same Air Cart, so check each motor to determine which seal kits are required.

2022 to present the **Patriot PHDRSY-80** motor has been used to fill any shortages of the Danfoss OMPX 80 motor.



Patriot PHDRSY-80.
Morris Part number **N72408.**
(Seal Kit N72409)



Danfoss OMPX 80
Morris Part number **N72140**
Seal Kit N72139



Danfoss DH 80
Morris Part number **N29319**
Seal Kit N48071

Notes

Section 14:
Hydraulics - Ground Drive
- March 2014 to Present

Section Contents

Hydraulic - Standard 14-2
- 9365, 9450, 9535 Tow Behind 14-2
- 9445, 9550, 9650 Tow Behind 14-5
- 9800 and 91000 Tow Behind 14-8
- 9365, 9450 Tow Between 14-12
- 9445, 9550, 9650 Tow Between 14-15
- 9800 Tow Between 14-18
- Tow Between - Hitch Jack Hydraulics 14-21

Dual Fan Hydraulic - Option 14-22
- Tow Behind 14-22
- Tow Between 14-24

Dual Flow Hydraulics - 12” Auger - Option 14-26
- 9800 and 91000 Tow Behind - Single Fan 14-26
- 9800 and 91000 Tow Behind - Dual Fan 14-29
- 9800 Tow Between - Single Fan 14-32
- 9800 Tow Between - Dual Fans 14-35

Dual Flow Hydraulics - Conveyor - Option 14-38
- 9800 and 91000 Tow Behind - Single Fan 14-38
- 9800 and 91000 Tow Behind - Dual Fan 14-41
- 9800 Tow Between - Single Fan 14-44
- 9800 Tow Between - Dual Fans 14-47

Calibration Hydraulics - Option 14-50
- 9365, 9450 , 9535, 9445, 9550, 9650 - Tow Behind 14-50
- 9365, 9450, 9445, 9550, 9650 - Tow Between 14-52
- 9800 and 91000 14-54
- Valve Block N56575 14-56

Meter Shutoff Hydraulics 14-57
- Electrical 14-57
- 9365, 9450 & 9535 14-58
- 9445, 9550 & 9650 14-60

Hydraulic Tip Adapter Kit 14-62

Hydraulic - Standard
9365, 9450, 9535 Tow Behind

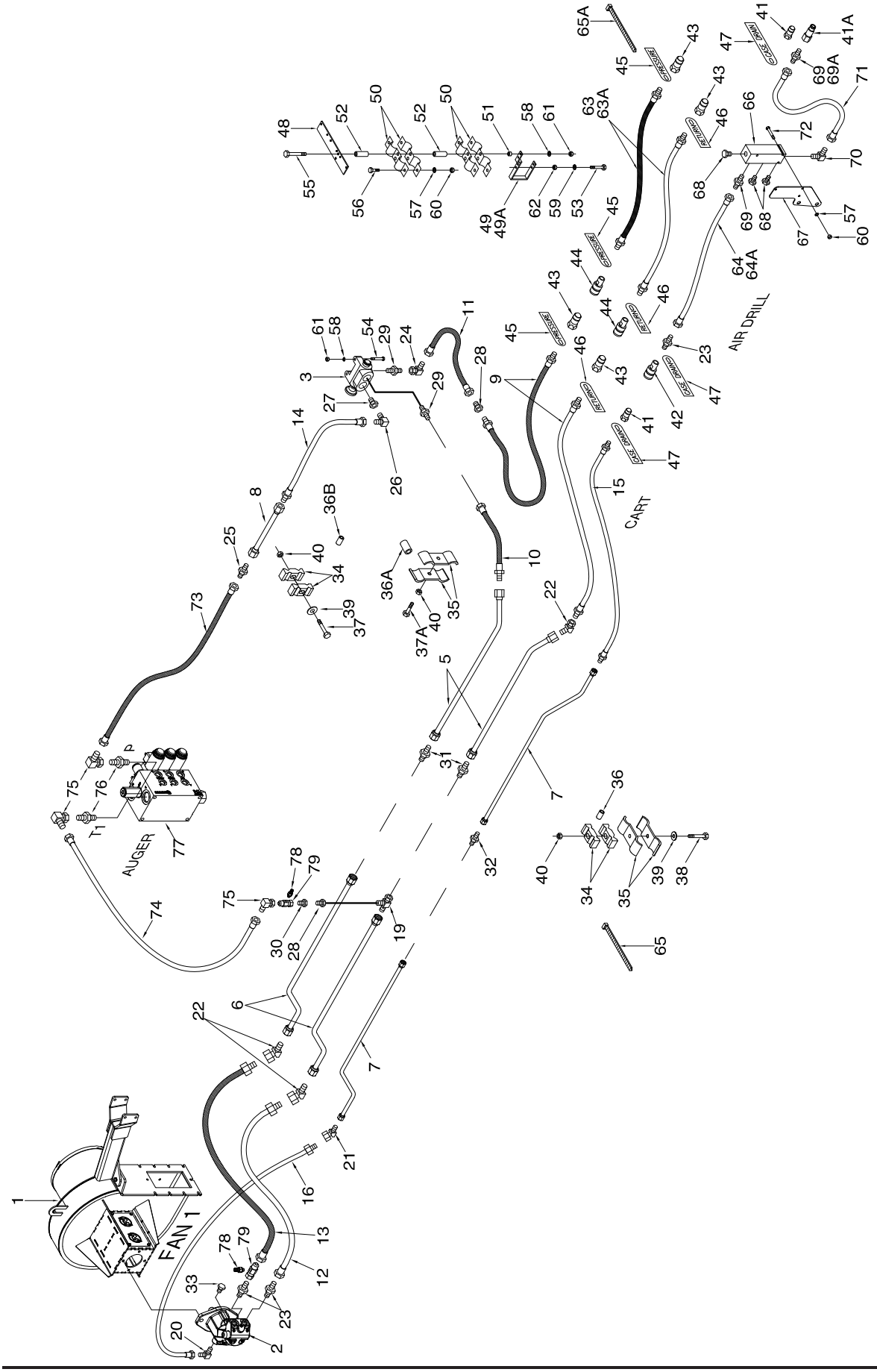

Hydraulic Standard - 9365, 9450, 9535 Tow Behind

Item	Part No.	Description	Qty
Cart System			
1	* * * * *	Fan - See Section 11	1
2	N53243	Hydraulic Motor W/ Internal Check Valve - Rexroth - See Section 11	1
3	N34506	Selector Valve w/1 1/16-12 FORB - (N31603 - Seal Kit) (C26358 - Knob)	1
4	* * * * *		
5	N19335	Oil Line - 1 x 92 Lg w/45 Bend w/1 1/16-12 FJIC	2
6	N36833	Oil Line - 1 x 94 Lg w / 6 Offset Bend x 1 5/16-12 FJIC	2
7	N36444	Oil Line - 1/2 x 94 Lg w / 6 Offset Bend x 3/4-16 FJIC	2
8	C-4368	Oil Line - 5/8 x 88 Lg w/ 7/8-14 FJIC	2
9	N37037	Hyd Hose - 3/4 x 270 Lg w/1 5/16-12 MJIC x 1 1/16-12 MORB (Prior to 2021)	2
	N56061	Hyd Hose - 3/4 x 330 Lg w/1 5/16-12 MJIC x 1 1/16-12 MORB (2021 to Present)	2
10	N50900	Hyd Hose - 3/4 x 52 Lg w/1 5/16-12 MJIC x 1 1/16-12 FJIC	1
11	N15991	Hyd Hose - 3/4 x 12 Lg w/1 1/16-12 FJIC	1
12	N53493	Hyd Hose - 3/4 x 48 Lg w/1 5/16-12 MJIC x 7/8-14 FJIC	1
13	N53495	Hyd Hose - 3/4 x 54 Lg w/1 5/16-12 MJIC x 7/8-14 FJIC	1
14	C-4387	Hyd Hose - 1/2 x 36 Lg w/7/8-14 MJIC x 7/8-14 FJIC	1
15	N37180	Hyd Hose - 3/8 x 270 Lg w/3/4-16 MJIC x 7/8-14 MORB (Prior to 2021)	1
	N56063	Hyd Hose - 3/8 x 330 Lg w/3/4-16 MJIC x 7/8-14 MORB (2021 to Present)	1
16	N19475	Hyd Hose - 3/8 x 48 Lg w/9/16-18 FJIC x 3/4-16 MJIC	1
17	* * * * *		
18	* * * * *		
19	N19336	Tee - Swivel - (1) 1 5/16-12 FJIC x (2) 1 5/16-12 MJIC	1
20	N16143	90 Elbow - Swivel - 9/16-18 JIC x 9/16-18 ORB	1
21	N36380	45 Elbow - Swivel - 3/4-16 FJIC x 3/4-16 MJIC	1
22	N36382	45 Elbow - Swivel - 1 5/16-12 FJIC x 1 5/16-12 MJIC	3
23	N34505	Connector - 7/8-14 (#10) MJIC x 7/8-14 (#10) MORB	3
24	N21189	90 Elbow - Swivel - 1 1/16-12 FJIC x 1 1/16-12 MJIC	1
25	C-4469	Connector - 7/8-14 MJIC.	1
26	C15318	90 Elbow - 7/8-14 MJIC x 7/8-14 MORB	1
27	N34499	Connector - 1 1/16-12 MORB x 7/8-14 FORB	1
28	N19338	Connector - 1 1/16-12 MJIC x 1 5/16-12 FJIC	1
29	N15990	Connector 1 1/16-12 MJIC x 1 1/16-12 MORB	2
30	N19337	Connector - 7/8-14 MJIC x 1 1/16-12 FJIC	1
31	N16346	Connector - 1 5/16-12 MJIC	2
32	N25754	Connector - 3/4-16 MJIC	1
33	N16621	Plug - 9/16-18 MORB	1
34	C-4698	Nylon Oil Line Clamp	14
35	D-4808	Oil Line Clamp	10
36	N21632	Oil Line Spacer - 3/8 ID x 9/16 OD x 3/4 Lg	4
36A	D-5011	Oil Line Spacer - .625 ID x 1 OD x 1.562 Lg	1
36B	N16257	Oil Line Spacer - 3/8 ID x 5/8 OD x 5/8 Lg	3
37	W-479	Hex Bolt - 3/8 x 2 1/4 Lg	3
37A	W-477	Hex Bolt - 3/8 x 1 1/2 Lg	1
38	D-5249	Hex Bolt - 3/8 x 3 1/4 Lg	4
39	W-538	Flatwasher - 3/8	7
40	M-3388	Locknut - 3/8	8
41	N34498	1/2 Male Pioneer Tip - 7/8-14 FORB (Cart - 1)	2
41A	K50834	3/8 Flat Face Tip - 3/4-16 FORB	1
42	N34488	1/2 Female Pioneer Coupler - 7/8-14 FORB	1
43	N37914	3/4 Male Pioneer Tip - 1 1/16-12 FORB (Cart - 2)	4
44	N37915	3/4 Female Pioneer Coupler - 1 1/16-12 FORB	2
45	N34576	Tag - Hose ID - Air Tank - Fan/Auger - PRESSURE	3
46	N34577	Tag - Hose ID - Air Tank - Fan/Auger - RETURN	3
47	N34578	Tag - Hose ID - Air Tank - Fan/Auger - CASE DRAIN	3
48	N21690	Mount Bracket	1
49	N21691	Mount Bracket - fits a 3 x 4 or 4 x 4 tube	1
49A	N27589	Mount Bracket - fits a 4 x 6 tube	1

Hydraulic Standard - 9365, 9450, 9535 Tow Behind			
Item	**Part No.**	**Description**	**Qty**
50	N16608	Pioneer Coupler Clamp	4
51	N13901	Bushing - 3/8 ID x 5/8 OD x 3/8 Lg	2
52	N19458	Spacer - 3/8 ID x 9/16 OD x 2 Lg	4
53	C-3918	Hex Bolt - 3/8 x 5 Lg	1
54	S-1303	Hex Bolt - 5/16 x 2 Lg - Cart Selector Valve Mount	2
55	S13337	Hex Bolt - 5/16 x 6 Lg	2
56	W-469	Hex Bolt - 1/4 x 3/4 Lg	4
57	W-521	Lockwasher - 1/4	7
58	W-522	Lockwasher - 5/16 (Cart - 2)	4
59	W-523	Lockwasher - 3/8	1
60	W-512	Hex Nut - 1/4	7
61	W-513	Hex Nut - 5/16 (Cart - 2)	4
62	W-514	Hex Nut - 3/8	1
63	N37036	Hyd Hose - 3/4 x 396 Lg w/1 1/16-12 MORB	2
63A	N37035	Hyd Hose - 3/4 x 348 Lg w/1 1/16-12 MORB	2
63B	N44955	Hyd Hose - 3/4 x 456 Lg w/1 1/16-12 MORB (5-Frame Contour Air Drill)	2
64	N50099	Hyd Hose - 3/8 x 348 Lg w/7/8-14 FJIC x 7/8-14 FJIC Swivel End	1
64A	N55806	Hyd Hose - 3/8 x 300 Lg w/7/8-14 FJIC Ends	1
64B	N50088	Hyd Hose - 3/8 x 396 Lg w/7/8-14 FJIC Ends (5-Frame Contour Air Drill)	1
65	D-4838	Tie Strap - 14 1/2 Lg	16
65A	D-4951	Tie Strap - 7 3/8 Lg	9
66	N58670	Case Drain Header	1
67	N58671	Plate - Case Drain Header Mount	1
68	C28505	Plug - 3/4-16 MORB	3
69	C14840	Connector - 3/4-16 MORB x 7/8-14 MJIC	2
69A	N34505	Connector - Swivel - 7/8-14 MORB x 7/8-14 MJIC	1
70	N34646	90 Elbow - 7/8-14 MJIC x 1 1/16-12 MORB	1
71	F-4565	Hyd Hose - 1/2 x 60 Lg w/7/8-14 FJIC	1
72	C15319	Hex Bolt - 1/4 x 2 1/2 Lg	3
Auger System		**See Auger or Conveyor hydraulics**	
73	C-4468	Auger - Hyd Hose - 1/2 x 24 Lg w/7/8-14 FJIC	1
74	C26259	Auger - Hyd Hose - 1/2 x 108 Lg w/7/8-14 FJIC	1
75	K-5806	Auger - 90 Elbow - Swivel - 7/8-14 MJIC x 7/8-14 FJIC	3
76	N47903	Auger - Connector - 7/8-14 MJIC x 1 1/16-12 MORB	2
77	N58555	Auger - Valve Block	1
78	N64583	Coupler - Test Port - 7/16-20 (#4) MORB	2
79	K62978	Tee - Gauge Port - 7/8-14 (#10) MJIC x 7/8-14 (#10) FJIC x 7/16-20 (#4) FORB	2

Hydraulic - Standard
9445, 9550, 9650 Tow Behind

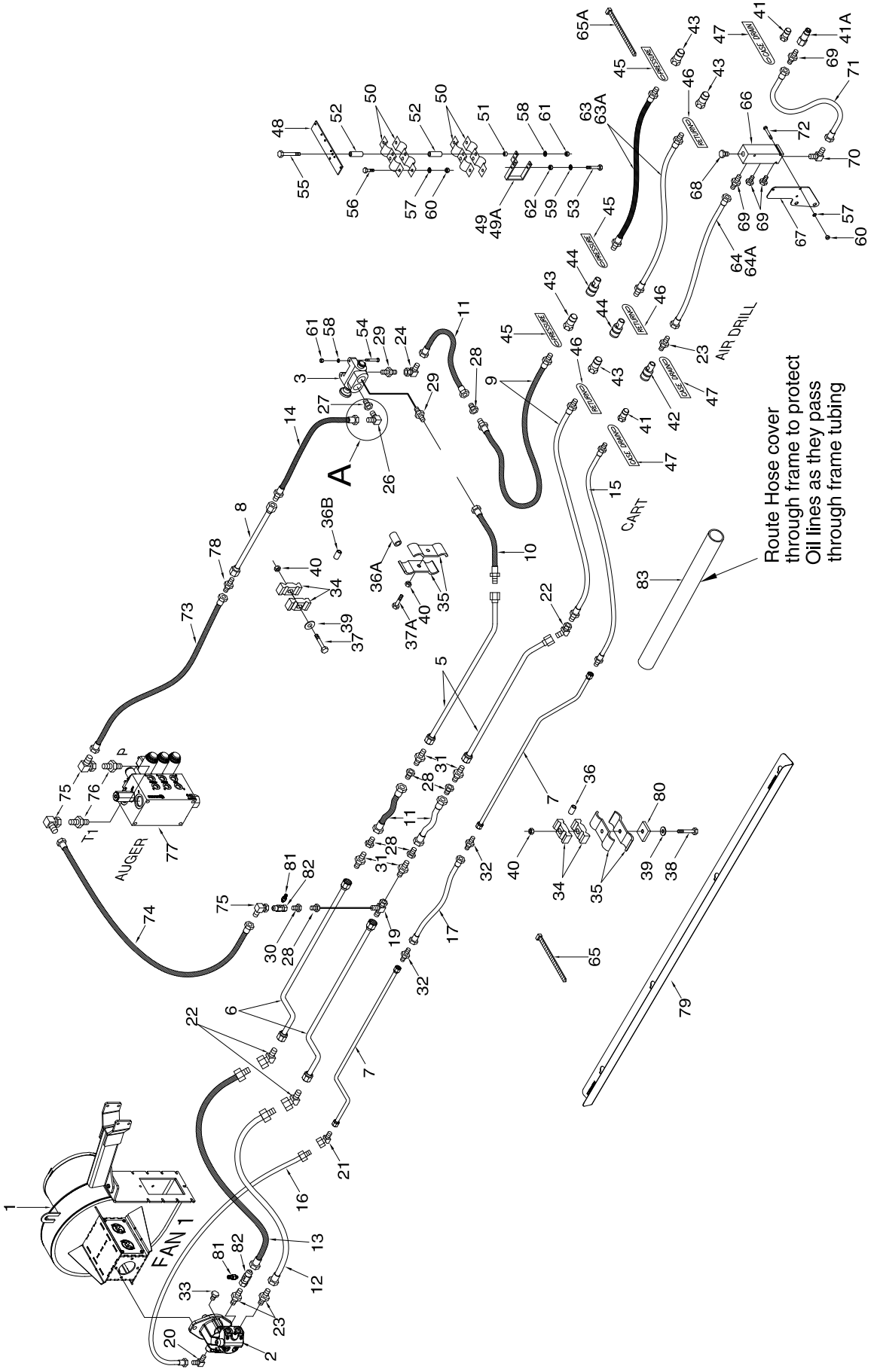

Hydraulic - 9445, 9550, 9650 Tow Behind

Item	Part No.	Description	Qty
Cart System			
1	* * * * *	Fan - See Section 11	1
2	N53243	Hydraulic Motor W/ Internal Check Valve - Rexroth - See Section 11	1
3	N34506	Selector Valve w/1 1/16-12 FORB - (N31603 - Seal Kit) (C26358 - Knob)	1
4	* * * * *		
5	N27601	Oil Line - 1 x 108 Lg w/45 Bend w/1 1/16-12 FJIC	2
6	N36833	Oil Line - 1 x 94 Lg w / 6 Offset Bend x 1 5/16-12 FJIC	2
7	N36444	Oil Line - 1/2 x 94 Lg w / 6 Offset Bend x 3/4-16 FJIC	2
8	C-4370	Oil Line - 5/8 x 128 Lg w/ 7/8-14 FJIC	1
9	N56061	Hyd Hose - 3/4 x 330 Lg w/1 5/16-12 MJIC x 1 1/16-12 MORB	2
10	N55197	Hyd Hose - 3/4 x 57 Lg w/1 5/16-12 MJIC x 1 1/16-12 FJIC	1
11	N15991	Hyd Hose - 3/4 x 12 Lg w/1 1/16-12 FJIC	3
12	N53493	Hyd Hose - 3/4 x 48 Lg w/1 5/16-12 MJIC x 7/8-14 FJIC	1
13	N53495	Hyd Hose - 3/4 x 54 Lg w/1 5/16-12 MJIC x 7/8-14 FJIC	1
14	C-4385	Hyd Hose - 1/2 x 24 Lg w/7/8-14 MJIC x 7/8-14 FJIC	1
15	N56063	Hyd Hose - 3/8 x 330 Lg w/3/4-16 MJIC x 7/8-14 MORB	1
16	N19475	Hyd Hose - 3/8 x 48 Lg w/9/16-18 FJIC x 3/4-16 MJIC	1
17	D10821	Hyd Hose - 3/8 x 38 Lg w/3/4-16 FJIC	1
18	* * * * *		
19	N19336	Tee - Swivel - (1) 1 5/16-12 FJIC x (2) 1 5/16-12 MJIC	1
20	N16143	90 Elbow - Swivel - 9/16-18 JIC x 9/16-18 ORB	1
21	N36380	45 Elbow - Swivel - 3/4-16 FJIC x 3/4-16 MJIC	1
22	N36382	45 Elbow - Swivel - 1 5/16-12 FJIC x 1 5/16-12 MJIC	3
23	N34505	Connector - 7/8-14 (#10) MJIC x 7/8-14 (#10) MORB	3
24	N21189	90 Elbow - Swivel - 1 1/16-12 FJIC x 1 1/16-12 MJIC	1
25	* * * * *		
26	C15318	90 Elbow - 7/8-14 MJIC x 7/8-14 MORB	1
27	N34499	Connector - 1 1/16-12 MORB x 7/8-14 FORB	1
28	N19338	Connector - 1 1/16-12 MJIC x 1 5/16-12 FJIC	6
29	N15990	Connector 1 1/16-12 MJIC x 1 1/16-12 MORB	2
30	N19337	Connector - 7/8-14 MJIC x 1 1/16-12 FJIC	1
31	N16346	Connector - 1 5/16-12 MJIC	4
32	N25754	Connector - 3/4-16 MJIC	2
33	N16621	Plug - 9/16-18 MORB	1
34	C-4698	Nylon Oil Line Clamp	14
35	D-4808	Oil Line Clamp	10
36	N21632	Oil Line Spacer - 3/8 ID x 9/16 OD x 3/4 Lg	4
36A	D-5011	Oil Line Spacer - .625 ID x 1 OD x 1.562 Lg	1
36B	N16257	Oil Line Spacer - 3/8 ID x 5/8 OD x 5/8 Lg	3
37	W-479	Hex Bolt - 3/8 x 2 1/4 Lg	3
37A	W-477	Hex Bolt - 3/8 x 1 1/2 Lg	1
38	C-1550	Hex Bolt - 3/8 x 4 Lg	4
39	W-538	Flatwasher - 3/8	7
40	M-3388	Locknut - 3/8	8
41	N34498	1/2 Male Pioneer Tip - 7/8-14 FORB (Cart - 1)	2
41A	K50961	Connector - 3/4-16 MORB x 7/8-14 FORB	1
41B	K50834	3/8 Flat Face Tip - 3/4-16 FORB	1
42	N34488	1/2 Female Pioneer Coupler - 7/8-14 FORB	1
43	N37914	3/4 Male Pioneer Tip - 1 1/16-12 FORB (Cart - 2)	4
44	N37915	3/4 Female Pioneer Coupler - 1 1/16-12 FORB	2
45	N34576	Tag - Hose ID - Air Tank - Fan/Auger - PRESSURE	3
46	N34577	Tag - Hose ID - Air Tank - Fan/Auger - RETURN	3
47	N34578	Tag - Hose ID - Air Tank - Fan/Auger - CASE DRAIN	3
48	N21690	Mount Bracket	1
49	N21691	Mount Bracket - fits a 3 x 4 or 4 x 4 tube	1
49A	N27589	Mount Bracket - fits a 4 x 6 tube	1

Hydraulic - 9445, 9550, 9650 Tow Behind

Item	Part No.	Description	Qty
50	N16608	Pioneer Coupler Clamp	4
51	N13901	Bushing - 3/8 ID x 5/8 OD x 3/8 Lg	2
52	N19458	Spacer - 3/8 ID x 9/16 OD x 2 Lg	4
53	C-3918	Hex Bolt - 3/8 x 5 Lg	1
54	S-1303	Hex Bolt - 5/16 x 2 Lg - Cart Selector Valve Mount	2
55	S13337	Hex Bolt - 5/16 x 6 Lg	2
56	W-469	Hex Bolt - 1/4 x 3/4 Lg	4
57	W-521	Lockwasher - 1/4	7
58	W-522	Lockwasher - 5/16 (Cart - 2)	4
59	W-523	Lockwasher - 3/8	1
60	W-512	Hex Nut - 1/4	7
61	W-513	Hex Nut - 5/16 (Cart - 2)	4
62	W-514	Hex Nut - 3/8	1
63	N37036	Hyd Hose - 3/4 x 396 Lg w/1 1/16-12 MORB	2
63A	N37035	Hyd Hose - 3/4 x 348 Lg w/1 1/16-12 MORB	2
63B	N44955	Hyd Hose - 3/4 x 456 Lg w/1 1/16-12 MORB (5-Frame Contour Air Drill)	2
64	N50099	Hyd Hose - 3/8 x 348 Lg w/7/8-14 FJIC x 7/8-14 FJIC Swivel End	1
64A	N55806	Hyd Hose - 3/8 x 300 Lg w/7/8-14 FJIC Ends	1
64B	N50088	Hyd Hose - 3/8 x 396 Lg w/7/8-14 FJIC Ends (5-Frame Contour Air Drill)	1
65	D-4838	Tie Strap - 14 1/2 Lg	16
65A	D-4951	Tie Strap - 7 3/8 Lg	9
66	N58670	Case Drain Header	1
67	N58671	Plate - Case Drain Header Mount	1
68	C28505	Plug - 3/4-16 MORB	3
69	C14840	Connector - 3/4-16 MORB x 7/8-14 MJIC	2
70	N34646	90 Elbow - 7/8-14 MJIC x 1 1/16-12 MORB	1
71	F-4565	Hyd Hose - 1/2 x 60 Lg w/7/8-14 FJIC	1
72	C15319	Hex Bolt - 1/4 x 2 1/2 Lg	3
Auger System		**See Auger or Conveyor hydraulics**	
73	C-4387	Auger - Hyd Hose - 1/2 x 36 Lg w/ 7/8-14 MJIC x 7/8-14 FJIC Swivel (Prior to 2017)	1
	C26344	Auger - Hyd Hose - 1/2 x 42 Lg w/7/8-14 FJIC	1
74	C26259	Auger - Hyd Hose - 1/2 x 108 Lg w/7/8-14 FJIC	1
75	K-5806	Auger - 90 Elbow - Swivel - 7/8-14 MJIC x 7/8-14 FJIC	3
76	N47903	Auger - Connector - 7/8-14 MJIC x 1 1/16-12 MORB	2
77	N58555	Auger - Valve Block	1
78	C-4469	Connector - 7/8-14 MJIC	1
79	N53086	Panel - Oil Line Cover - 2 1/4 tall - Single Fan	2
	N53009	Panel - Oil Line Cover - 3 3/4 tall - Dual Fan	2
80	S31476	Plate Spacer - 1/2	4
81	N64583	Coupler - Test Port - 7/16-20 (#4) MORB	2
82	K62978	Tee - Gauge Port - 7/8-14 (#10) MJIC x 7/8-14 (#10) FJIC x 7/16-20 (#4) FORB	2
83	N62246	Hydraulic Hose Sleeve - 3” Dia x 36” Lg	1

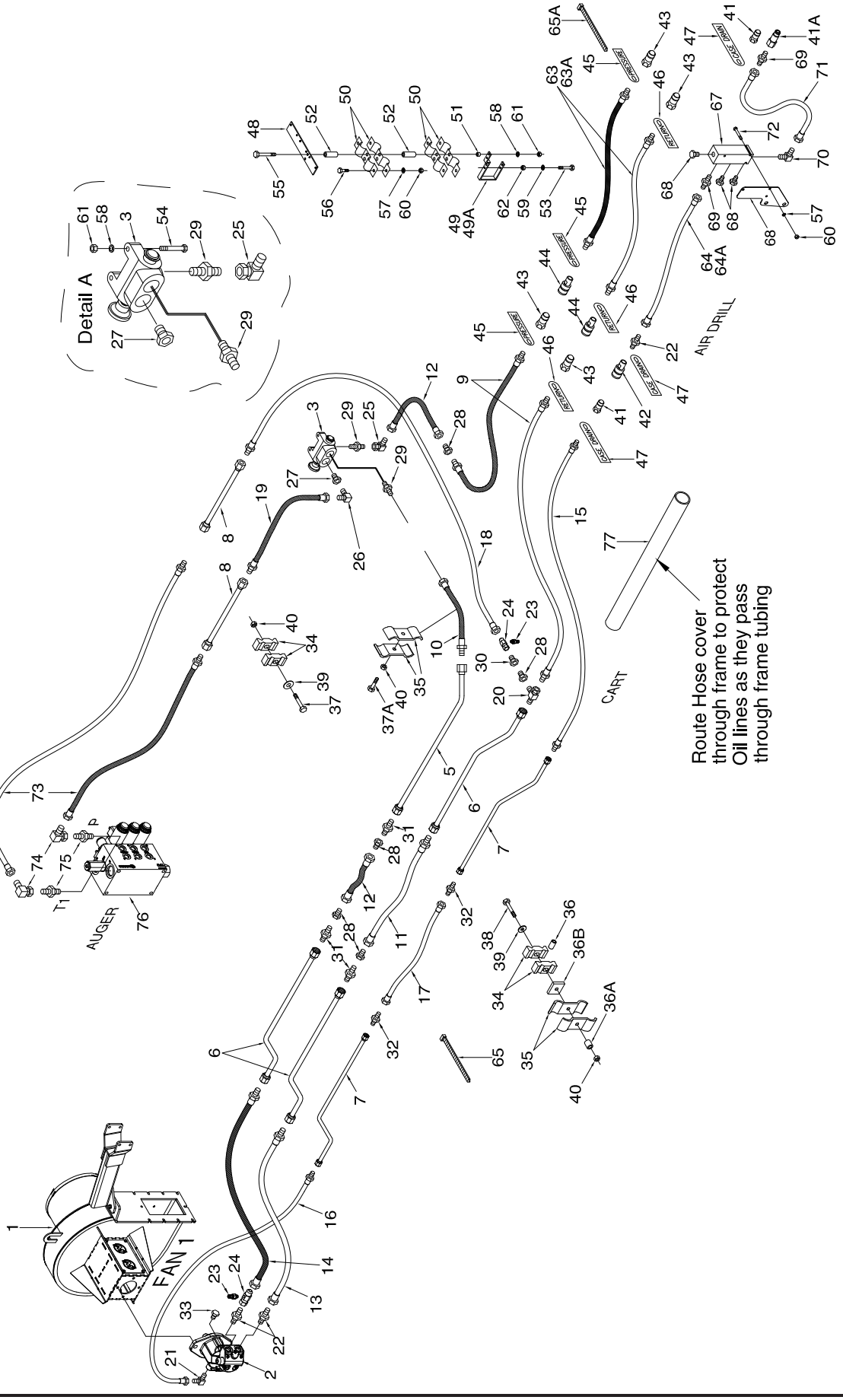
Detail A
AIR DRILL
CART
AUGER
FAN 1
Route Hose cover
through frame to protect
Oil lines as they pass
through frame tubing

Hydraulic Standard - 9800 and 91000 Tow Behind

Item	Part No.	Description	Qty
Cart System			
1	* * * * *	Fan - See Section 11	1
2	N53243	Hydraulic Motor W/ Internal Check Valve - Rexroth - See Section 11	1
3	N34506	Selector Valve w/1 1/16-12 FORB - (N31603 - Seal Kit) (C26358 - Knob)	1
4	* * * * *		
5	N27601	Oil Line - 1 x 108 Lg w/45 Bend w/1 1/16-12 FJIC	2
6	N36833	Oil Line - 1 x 94 Lg w / 6 Offset Bend x 1 5/16-12 FJIC	2
7	N36444	Oil Line - 1/2 x 94 Lg w / 6 Offset Bend x 3/4-16 FJIC	2
8	C-4370	Oil Line - 5/8 x 128 Lg w/ 7/8-14 FJIC	2
9	N56061	Hyd Hose - 3/4 x 330 Lg w/1 5/16-12 MJIC x 1 1/16-12 MORB	2
10	N55197	Hyd Hose - 3/4 x 57 Lg w/1 5/16-12 MJIC x 1 1/16-12 FJIC	1
11	N19434	Hyd Hose - 3/4 x 35 Lg w/1 5/16-12 MJIC x 1 1/16-12 FJIC	1
12	N15991	Hyd Hose - 3/4 x 12 Lg w/1 1/16-12 FJIC	2
13	N53493	Hyd Hose - 3/4 x 48 Lg w/1 5/16-12 MJIC x 7/8-14 FJIC	1
14	N53495	Hyd Hose - 3/4 x 54 Lg w/1 5/16-12 MJIC x 7/8-14 FJIC	1
15	N56063	Hyd Hose - 3/8 x 330 Lg w/3/4-16 MJIC x 7/8-14 MORB	1
16	N19475	Hyd Hose - 3/8 x 48 Lg w/9/16-18 FJIC x 3/4-16 MJIC	1
17	D10821	Hyd Hose - 3/8 x 38 Lg w/3/4-16 FJIC	1
18	C15310	Hyd Hose - 1/2 x 72 Lg w/7/8-14 MJIC x 7/8-14 FJIC	1
19	C-4385	Hyd Hose - 1/2 x 24 Lg w/7/8-14 MJIC x 7/8-14 FJIC	1
20	N19336	Tee - Swivel - (1) 1 5/16-12 FJIC x (2) 1 5/16-12 MJIC	1
21	N16143	90 Elbow - Swivel - 9/16-18 JIC x 9/16-18 ORB	1
22	N34505	Connector - 7/8-14 (#10) MJIC x 7/8-14 (#10) MORB	3
23	N64583	Coupler - Test Port - 7/16-20 (#4) MORB	2
24	K62978	Tee - Gauge Port - 7/8-14 (#10) MJIC x 7/8-14 (#10) FJIC x 7/16-20 (#4) FORB	2
25	N21189	90 Elbow - Swivel - 1 1/16-12 FJIC x 1 1/16-12 MJIC	1
26	C15318	90 Elbow - 7/8-14 MJIC x 7/8-14 MORB	1
27	N34499	Connector - 1 1/16-12 MORB x 7/8-14 FORB	1
28	N19338	Connector - 1 1/16-12 MJIC x 1 5/16-12 FJIC	5
29	N15990	Connector 1 1/16-12 MJIC x 1 1/16-12 MORB	2
30	N19337	Connector - 7/8-14 MJIC x 1 1/16-12 FJIC	1
31	N16346	Connector - 1 5/16-12 MJIC	4
32	N25754	Connector - 3/4-16 MJIC	2
33	N16621	Plug - 9/16-18 MORB	1
34	C-4698	Nylon Oil Line Clamp	14
35	D-4808	Oil Line Clamp	10
36	N21632	Oil Line Spacer - 3/8 ID x 9/16 OD x 3/4 Lg	4
36A	N16257	Oil Line Spacer - 3/8 ID x 5/8 OD x 5/8 Lg	4
36B	S31476	Plate Spacer - 1/2	4
37	W-479	Hex Bolt - 3/8 x 2 1/4 Lg	3
37A	W-477	Hex Bolt - 3/8 x 1 1/2 Lg	1
38	C-1550	Hex Bolt - 3/8 x 4 Lg	4
39	W-538	Flatwasher - 3/8	7
40	M-3388	Locknut - 3/8	8
41	N34498	1/2 Male Pioneer Tip - 7/8-14 FORB (Cart - 1)	2
41A	K50834	3/8 Flat Face Tip - 3/4-16 FORB	1
42	N34488	1/2 Female Pioneer Coupler - 7/8-14 FORB	1
43	N37914	3/4 Male Pioneer Tip - 1 1/16-12 FORB (Cart - 2)	4
44	N37915	3/4 Female Pioneer Coupler - 1 1/16-12 FORB	2
45	N34576	Tag - Hose ID - Air Tank - Fan/Auger - PRESSURE	3
46	N34577	Tag - Hose ID - Air Tank - Fan/Auger - RETURN	3
47	N34578	Tag - Hose ID - Air Tank - Fan/Auger - CASE DRAIN	3
48	N21690	Mount Bracket	1
49	N21691	Mount Bracket - fits a 3 x 4 or 4 x 4 tube	1
49A	N27589	Mount Bracket - fits a 4 x 6 tube	1
50	N16608	Pioneer Coupler Clamp	4
51	N13901	Bushing - 3/8 ID x 5/8 OD x 3/8 Lg	2
52	N19458	Spacer - 3/8 ID x 9/16 OD x 2 Lg	4
53	C-3918	Hex Bolt - 3/8 x 5 Lg	1
54	S-1303	Hex Bolt - 5/16 x 2 Lg - Cart Selector Valve Mount	2
55	S13337	Hex Bolt - 5/16 x 6 Lg	2

Hydraulic Standard - 9800 and 91000 Tow Behind Hydraulic - STD			
Item	**Part No.**	**Description**	**Qty**
56	W-469	Hex Bolt - 1/4 x 3/4 Lg	4
57	W-521	Lockwasher - 1/4	4
58	W-522	Lockwasher - 5/16 (Cart - 2) (VR - 2)	6
59	W-523	Lockwasher - 3/8	1
60	W-512	Hex Nut - 1/4	4
61	W-513	Hex Nut - 5/16 (Cart - 2) (VR - 2)	6
62	W-514	Hex Nut - 3/8	1
63	N37036	Hyd Hose - 3/4 x 396 Lg w/1 1/16-12 MORB	2
63A	N37035	Hyd Hose - 3/4 x 348 Lg w/1 1/16-12 MORB	2
63B	N44955	Hyd Hose - 3/4 x 456 Lg w/1 1/16-12 MORB (5-Frame Contour Air Drill)	2
64	N50099	Hyd Hose - 3/8 x 348 Lg w/7/8-14 FJIC x 7/8-14 FJIC Swivel End	1
64A	N55806	Hyd Hose - 3/8 x 300 Lg w/7/8-14 FJIC Ends	1
64B	N50088	Hyd Hose - 3/8 x 396 Lg w/7/8-14 FJIC Ends (5-Frame Contour Air Drill)	1
65	D-4838	Tie Strap - 14 1/2 Lg	16
65A	D-4951	Tie Strap - 7 3/8 Lg	9
66	N58670	Case Drain Header	1
67	N58671	Plate - Case Drain Header Mount	1
68	C28505	Plug - 3/4-16 MORB	3
69	C14840	Connector - 3/4-16 MORB x 7/8-14 MJIC	2
70	N34646	90 Elbow - 7/8-14 MJIC x 1 1/16-12 MORB	1
71	F-4565	Hyd Hose - 1/2 x 60 Lg w/7/8-14 FJIC	1
72	C15319	Hex Bolt - 1/4 x 2 1/2 Lg	3
Auger System			
73	C-4387	Auger - Hyd Hose - 1/2 x 36 Lg w/7/8-14 MJIC x 7/8-14 FJIC	2
74	K-5806	Auger - 90 Elbow - Swivel - 7/8-14 MJIC x 7/8-14 FJIC	3
75	N47903	Auger - Connector - 7/8-14 MJIC x 1 1/16-12 MORB	2
76	N58555	Auger - Valve Block	1
77	N62246	Hydraulic Hose Sleeve - 3” Dia x 36” Lg	1
	N19023	Decal - Danger “HOT” (Not Shown)	1
	N36263	Decal - Warning “BURN HAZARD” (Not Shown)	1
	N36443	Decal - Auger “LEVER POSITION” (Not Shown)	1
	N36453	Decal - “AUGER / FAN” (Not Shown)	1

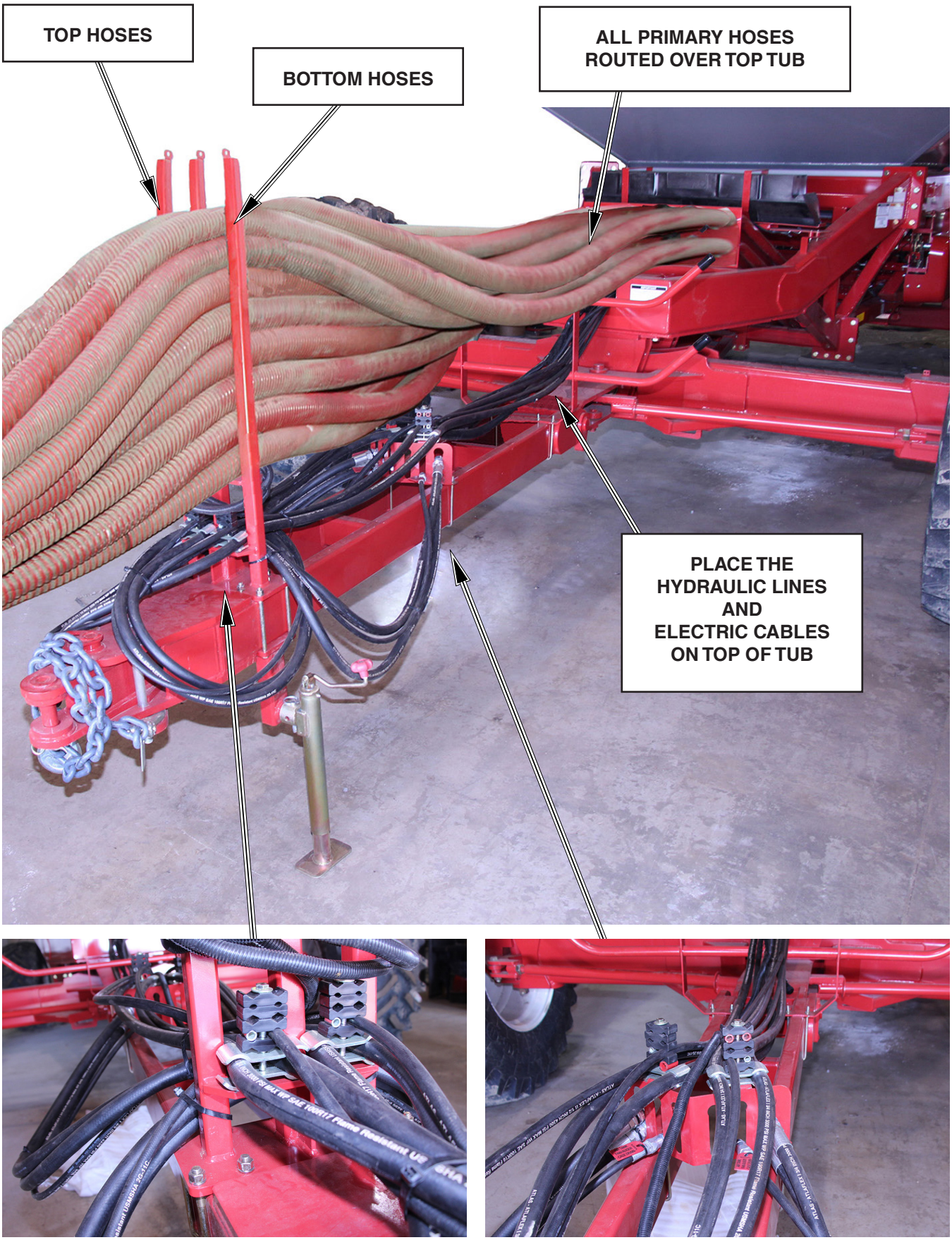
TOP HOSES
BOTTOM HOSES
ALL PRIMARY HOSES ROUTED OVER TOP TUB
PLACE THE HYDRAULIC LINES AND ELECTRIC CABLES ON TOP OF TUB

Hydraulic - Standard
9365, 9450 Tow Between

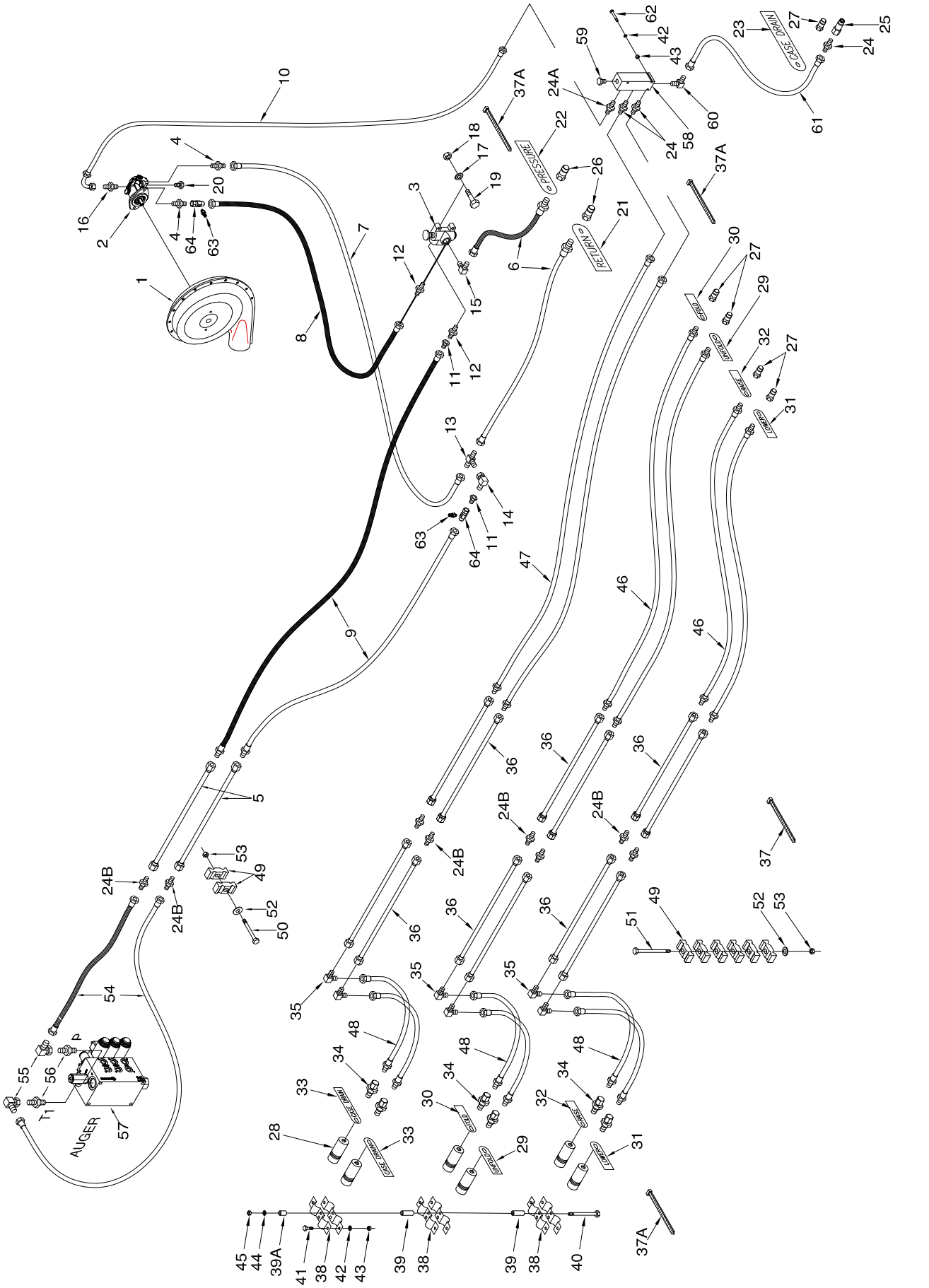

Hydraulic Standard - 9365, 9450 Tow Between

Item	Part No.	Description	Qty
1	* * * * *	Fan - See Section 11	1
2	N53243	Hydraulic Motor W/ Internal Check Valve - Rexroth - See Section 11	1
3	N37514	Selector Valve (Seal Kit # N31603) (Knob # C26358)	1
4	N34505	Connector - 7/8-14 (#10) MJIC x 7/8-14 (#10) MORB	2
5	C-4368	Oil Line - 5/8 x 88 Lg w/ 7/8-14 FJIC	2
6	N37038	Hyd Hose - 3/4 x 84 Lg w/ 1 1/16-12 MORB x 1 1/16-12 FJIC	2
7	N53494	Hyd Hose - 3/4 x 66 - 1 1/16-12 FJIC x 7/8-14 FJIC swivel end	1
8	N53496	Hyd Hose - 3/4 x 54 - 1 1/16-12 FJIC x 7/8-14 FJIC swivel end	1
9	N55169	Hyd Hose - 1/2 x 108 Lg w/7/8-14 MJIC x 7/8-14 FJIC	2
10	N37421	Hyd Hose - 3/8 x 108 - 3/4-16 FJIC x 9/16-18 FJIC w/90 Bend	1
11	N19337	Connector - 7/8-14 MJIC x 1 1/16-12 FJIC	2
12	N15990	Connector - 1 1/16-12 MJIC x 1 1/16-12 MORB	2
13	N19549	Tee - 1 1/16 MJIC	1
14	N21189	90 Elbow - Swivel - 1 1/16-12 FJIC x 1 1/16-12 MJIC	1
15	N16359	90 Elbow - 1 1/16-12 MJIC x 1 1/16-12 MORB	1
16	N29358	Connector - 9/16-18 MJIC x 9/16-18 MORB	1
17	W-522	Lockwasher - 5/16	2
18	W-513	Hex Nut - 5/16	2
19	S-1303	Hex Bolt - 5/16 x 2 Lg	2
20	N16621	Plug - 9/16-18 MORB	1
21	N34577	Tag - Hose ID Tank - Fan/Auger - RETURN	1
22	N34576	Tag - Hose ID - Tank - Fan/Auger - PRESSURE	1
23	N34578	Tag - Hose ID - Tank - Fan/Auger - CASE DRAIN	1
24	C14840	Connector - 3/4-16 MORB x 7/8-14 MJIC	1
24A	C15330	Connector - 3/4-16 MORB x 3/4-16 MJIC (10178)	1
24B	C-4469	Connector - 7/8-14 (#10) MJIC	8
25	K50834	3/8 Flat Face Tip - 3/4-16 FORB	1
26	N37914	3/4 Male Pioneer Tip - 1 1/16-12 FORB	2
27	N34498	1/2 Male Pioneer Tip - 7/8-14 FORB	5
28	N34488	1/2 Female Pioneer Coupler - 7/8-14 FORB	6
29	S37662	Tag - Hose ID - Wing Lift - UNFOLD	2
30	S37661	Tag - Hose ID - Wing Lift - FOLD	2
31	S37663	Tag - Hose ID - Depth Control - LOWER	2
32	S37664	Tag - Hose ID - Depth Control - RAISE	2
33	S44456	Tag - Hose ID - Case Drain	2
33A	N59870	Tag - Hose ID - Auxilary Circuit	2
34	N34620	Connector - 7/8-14 FJIC x 7/8-14 MORB	6
35	H24393	90 Elbow - 7/8-14 MJIC	8
36	N37348	Oil Line - 5/8 x 84 Lg w/ 7/8-14 FJIC	12
37	D-4838	Tie Strap - 14 1/2 Lg	15
37A	D-4951	Tie Strap - 7 3/8 Lg	15
37B	S13336	Tie Strap - 24 Lg	3
38	N16608	Coupler Clamp - Female Pioneer	6
39	N19458	Spacer Bushing - 0.540 OD x 2	4
39A	N19155	Spacer Bushing - 0.540 OD x 1/2	2
40	S13337	Hex Bolt - 5/16 x 6 Lg	2
41	W-469	Hex Bolt - 1/4 x 3/4 Lg	6
42	W-521	Lockwasher - 1/4	6
43	W-512	Hex Nut - 1/4	6
44	W-522	Lockwasher - 5/16	2
45	W-513	Hex Nut - 5/16	2
46	N37403	Hyd Hose - 1/2 x 192 Lg - 7/8-14 MJIC x 7/8-14 MORB	4
47	C26259	Hyd Hose - 1/2 x 108 Lg - 7/8-14 FJIC	2
48	C-4387	Hyd Hose - 1/2 x 36 Lg w/7/8-14 MJIC x 7/8-14 FJIC Swivel	6
49	C-4698	Nylon Oil Line Clamp (STD-4) (Tillage-24)	28
50	W-479	Hex Bolt - 3/8 x 2 1/4 Lg	2
51	C-3664	Hex Bolt - 3/8 x 5 1/2 Lg	4
52	W-538	Flatwasher - 3/8	6
53	M-3388	Locknut - 3/8	6

Hydraulic Standard - 9365, 9450 Tow Between

Item	Part No.	Description	Qty
Auger System		**See Auger or Conveyor hydraulics**	
54	C-4468	Auger - Hyd Hose - 1/2 x 24 Lg w/7/8-14 FJIC	2
55	K-5806	Auger - 90 Elbow - Swivel - 7/8-14 MJIC x 7/8-14 FJIC	2
56	N47903	Auger - Connector - 7/8-14 MJIC x 1 1/16-12 MORB	2
57	N58555	Auger - Valve Block	1
	N19023	Decal - Danger “HOT” (Not Shown)	1
	N36263	Decal - Warning “BURN HAZARD” (Not Shown)	1
	N36443	Decal - Auger “LEVER POSITION” (Not Shown)	1
	N19031	Decal - “AUGER / FAN” (Not Shown)	1
58	N58670	Case Drain Header	1
59	C28505	Plug - 3/4-16 MORB	1
60	N34646	90 Elbow - 7/8-14 MJIC x 1 1/16-12 MORB	1
61	F-4565	Hyd Hose - 1/2 x 60 Lg w/7/8-14 FJIC	1
62	C15319	Hex Bolt - 1/4 x 2 1/2 Lg	3
63	N64583	Coupler - Test Port - 7/16-20 (#4) MORB	2
64	K62978	Tee - Gauge Port - 7/8-14 (#10) MJIC x 7/8-14 (#10) FJIC x 7/16-20 (#4) FORB	2

Hydraulic - Standard
9445, 9550, 9650 Tow Between

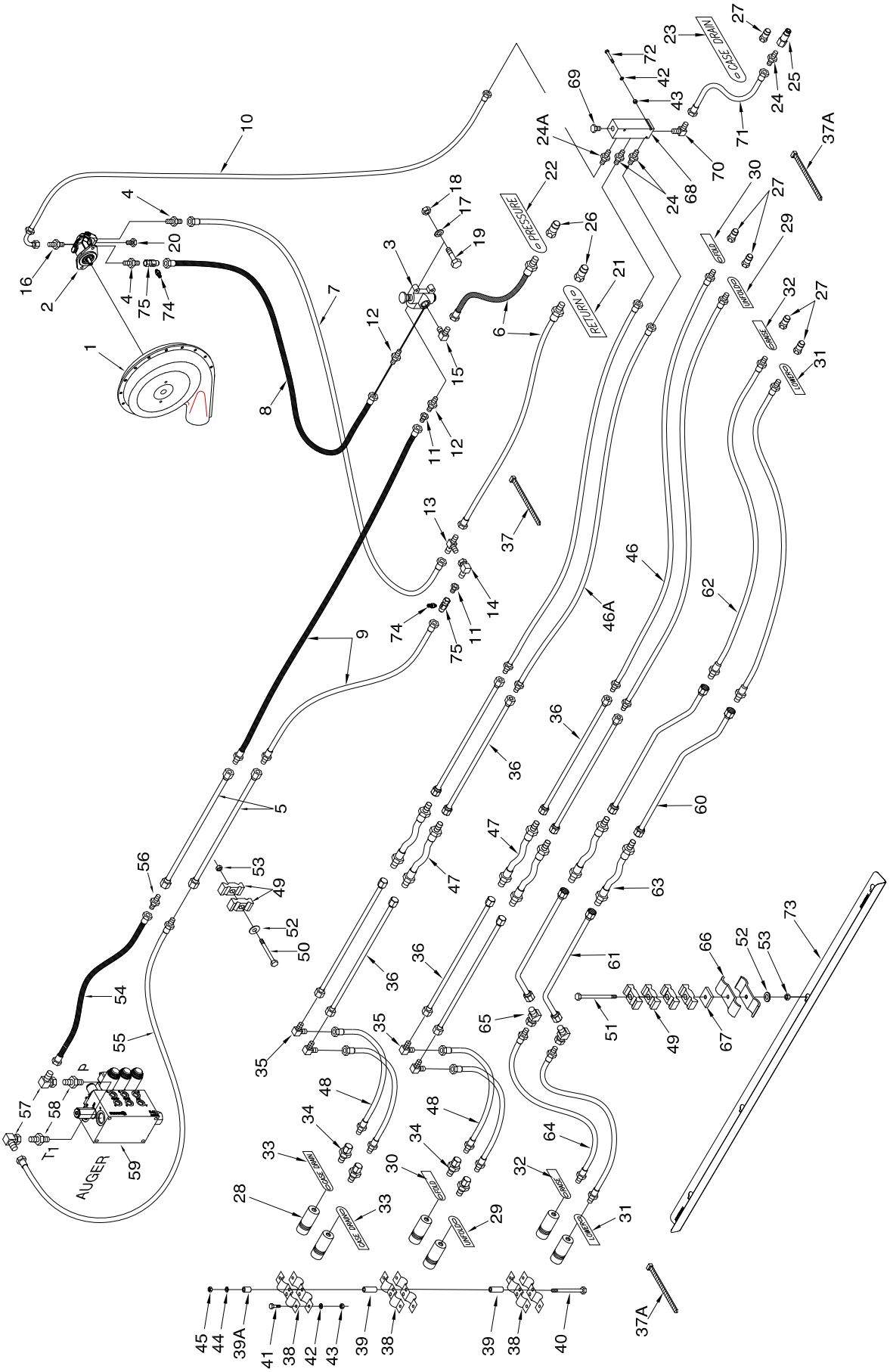

Hydraulic Standard - 9445, 9550, 9650 Tow Between

Item	Part No.	Description	Qty
1	* * * * *	Fan - See Section 11	1
2	N53243	Hydraulic Motor W/ Internal Check Valve - Rexroth - See Section 11	1
3	N37514	Selector Valve (Seal Kit # N31603) (Knob # C26358)	1
4	N34505	Connector - 7/8-14 (#10) MJIC x 7/8-14 (#10) MORB	1
5	C-4370	Oil Line - 5/8 x 128 Lg w/ 7/8-14 FJIC	2
6	N37038	Hyd Hose - 3/4 x 84 Lg w/ 1 1/16-12 MORB x 1 1/16-12 FJIC	2
7	N53494	Hyd Hose - 3/4 x 66 - 1 1/16-12 FJIC x 7/8-14 FJIC swivel end	1
8	N53496	Hyd Hose - 3/4 x 54 - 1 1/16-12 FJIC x 7/8-14 FJIC swivel end	1
9	N55169	Hyd Hose - 1/2 x 108 Lg - 7/8-14 MJIC x 7/8-14 FJIC swivel end	2
10	N37421	Hyd Hose - 3/8 x 108 - 3/4-16 FJIC x 9/16-18 FJIC w/90 Bend	1
11	N19337	Connector - 7/8-14 MJIC x 1 1/16-12 FJIC	2
12	N15990	Connector - 1 1/16-12 MJIC x 1 1/16-12 MORB	2
13	N19549	Tee - 1 1/16 MJIC	1
14	N21189	90 Elbow - Swivel - 1 1/16-12 FJIC x 1 1/16-12 MJIC	2
15	N16359	90 Elbow - 1 1/16-12 MJIC x 1 1/16-12 MORB	1
16	N29358	Connector - 9/16-18 MJIC x 9/16-18 MORB	1
17	W-522	Lockwasher - 5/16	2
18	W-513	Hex Nut - 5/16	2
19	S-1303	Hex Bolt - 5/16 x 2 Lg	2
20	N16621	Plug - 9/16-18 MORB	1
21	N34577	Tag - Hose ID Tank - Fan/Auger - RETURN	1
22	N34576	Tag - Hose ID - Tank - Fan/Auger - PRESSURE	1
23	N34578	Tag - Hose ID - Tank - Fan/Auger - CASE DRAIN	1
24	C14840	Connector - 3/4-16 MORB x 7/8-14 MJIC	1
24A	C15330	Connector - 3/4-16 MORB x 3/4-16 MJIC (10178)	1
25	K50834	3/8 Flat Face Tip - 3/4-16 FORB	1
26	N37914	3/4 Male Pioneer Tip - 1 1/16-12 FORB	2
27	N34498	1/2 Male Pioneer Tip - 7/8-14 FORB	7
28	N34488	1/2 Female Pioneer Coupler - 7/8-14 FORB	6
29	S37662	Tag - Hose ID - Wing Lift - UNFOLD	2
30	S37661	Tag - Hose ID - Wing Lift - FOLD	2
31	S37663	Tag - Hose ID - Depth Control - LOWER	2
32	S37664	Tag - Hose ID - Depth Control - RAISE	2
33	S44456	Tag - Hose ID - Case Drain	2
33A	N59870	Tag - Hose ID - Auxilary Circuit	2
34	N34620	Connector - 7/8-14 FJIC x 7/8-14 MORB	4
35	H24393	90 Elbow - 7/8-14 MJIC	4
36	N37348	Oil Line - 5/8 x 84 Lg w/ 7/8-14 FJIC	8
37	D-4838	Tie Strap - 14 1/2 Lg	15
37A	D-4951	Tie Strap - 7 3/8 Lg	15
37B	S13336	Tie Strap - 24 Lg	3
38	N16608	Coupler Clamp - Female Pioneer	6
39	N19458	Spacer Bushing - 0.540 OD x 2	4
39A	N19155	Spacer Bushing - 0.540 OD x 1/2	2
40	S13337	Hex Bolt - 5/16 x 6 Lg	2
41	W-469	Hex Bolt - 1/4 x 3/4 Lg	6
42	W-521	Lockwasher - 1/4	6
43	W-512	Hex Nut - 1/4	6
44	W-522	Lockwasher - 5/16	2
45	W-513	Hex Nut - 5/16	2
46	N37403	Hyd Hose - 1/2 x 192 Lg - 7/8-14 MJIC x 7/8-14 MORB	2
46A	S22403	Hyd Hose - 1/2 x 120 Lg - 7/8-14 FJIC	2
47	C-4386	Hyd Hose - 1/2 x 36 Lg w/7/8-14 MJIC	4
48	C-4387	Hyd Hose - 1/2 x 36 Lg w/7/8-14 MJIC x 7/8-14 FJIC Swivel	4
49	C-4698	Nylon Oil Line Clamp (STD-4) (Tillage-24)	22
50	W-479	Hex Bolt - 3/8 x 2 1/4 Lg	3
51	C-3664	Hex Bolt - 3/8 x 5 1/2 Lg	4
52	W-538	Flatwasher - 3/8	7
53	M-3388	Locknut - 3/8	7

Hydraulic Standard - 9445, 9550, 9650 Tow Between

Item	Part No.	Description	Qty
Auger System			
54	C26344	Auger - Hyd Hose - 1/2 x 42 Lg w/7/8-14 FJIC	1
55	C-4388	Auger - Hyd Hose - 1/2 x 48 Lg w/ 7/8-14 MJIC x 7/8-14 FJIC	1
56	C-4469	Connector - 7/8-14 MJIC	1
57	K-5806	Auger - 90 Elbow - Swivel - 7/8-14 MJIC x 7/8-14 FJIC	2
58	N47903	Auger - Connector - 7/8-14 MJIC x 1 1/16-12 MORB	2
59	N58555	Auger - Valve Block	1
	N19023	Decal - Danger “HOT” (Not Shown)	1
	N36263	Decal - Warning “BURN HAZARD” (Not Shown)	1
	N36443	Decal - Auger “LEVER POSITION” (Not Shown)	1
	N19031	Decal - “AUGER / FAN” (Not Shown)	1
60	N36833	Oil Line - 1 x 94 Lg w/ 1 5/16-12 FJIC (#16)	2
61	N27601	Oil Line - 1 x 108 Lg w/45 Bend w/1 1/16-12 FJIC	2
62	N58170	Hyd Hose - 3/4 x 192 Lg - 1 5/16-12 MJIC (#16) x 7/8-14 MORB (#10)	2
63	N58167	Hyd Hose - 3/4 x 12 Lg - 1 5/16-12 MJIC Ends	2
64	N58169	Hyd Hose - 3/4 x 36 Lg - 1 5/16 -12 MJIC (#16) x 7/8 -14 MORB	2
65	N36382	45 Elbow - 1 5/16-12 MJIC x 1 5/16-12 FJIC Swivel	2
66	D-4808	Oil Line Clamp	8
67	S31476	Plate Spacer - 1 1/2 x 1 1/2 x 1/2 thick	4
68	N58670	Case Drain Header	1
69	C28505	Plug - 3/4-16 MORB	1
70	N34646	90 Elbow - 7/8-14 MJIC x 1 1/16-12 MORB	1
71	F-4565	Hyd Hose - 1/2 x 60 Lg w/7/8-14 FJIC	1
72	C15319	Hex Bolt - 1/4 x 2 1/2 Lg	3
73	N53009	Panel - Oil Line Cover	2
74	N64583	Coupler - Test Port - 7/16-20 (#4) MORB	2
75	K62978	Tee - Gauge Port - 7/8-14 (#10) MJIC x 7/8-14 (#10) FJIC x 7/16-20 (#4) FORB	2

Hydraulic - Standard
9800 Tow Between

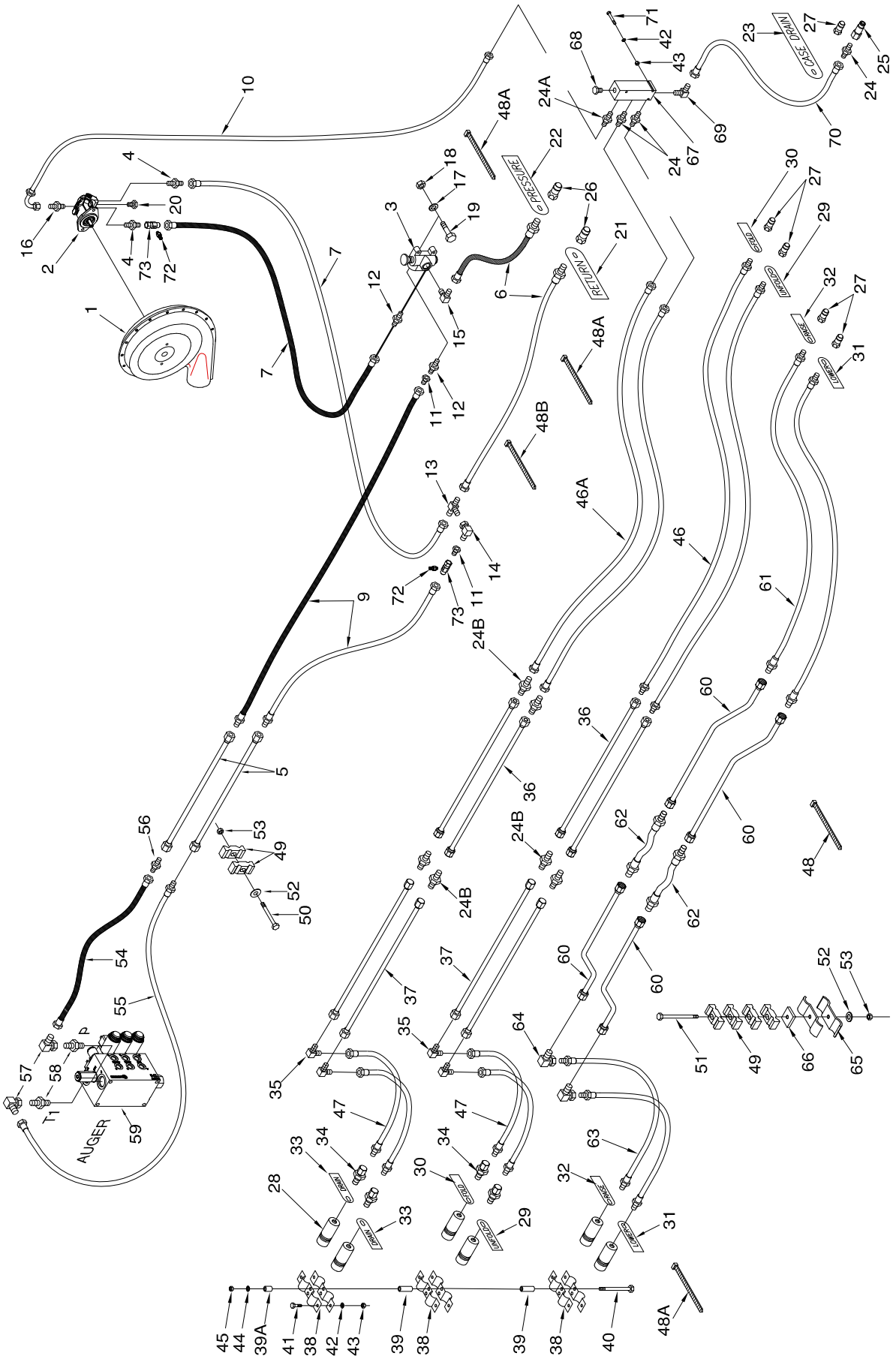

Hydraulic Standard - 9800 Tow Between

Item	Part No.	Description	Qty
1	* * * * *	Fan - See Section 11	1
2	N53243	Hydraulic Motor W/ Internal Check Valve - Rexroth - See Section 11	1
3	N37514	Selector Valve (Seal Kit # N31603) (Knob # C26358)	1
4	N34505	Connector - 7/8-14 (#10) MJIC x 7/8-14 (#10) MORB	1
5	C-4370	Oil Line - 5/8 x 128 Lg w/ 7/8-14 FJIC	2
6	N37038	Hyd Hose - 3/4 x 84 Lg w/ 1 1/16-12 MORB x 1 1/16-12 FJIC	2
7	N53494	Hyd Hose - 3/4 x 66 - 1 1/16-12 FJIC x 7/8-14 FJIC swivel end	2
8	* * * * *		
9	N55169	Hyd Hose - 1/2 x 108 Lg w/7/8-14 MJIC x 7/8-14 FJIC swivel end	2
10	N37421	Hyd Hose - 3/8 x 108 - 3/4-16 FJIC x 9/16-18 FJIC w/90 Bend	1
11	N19337	Connector - 7/8-14 MJIC x 1 1/16-12 FJIC	2
12	N15990	Connector - 1 1/16-12 MJIC x 1 1/16-12 MORB	2
13	N19549	Tee - 1 1/16 MJIC	1
14	N21189	90 Elbow - Swivel - 1 1/16-12 FJIC x 1 1/16-12 MJIC	2
15	N16359	90 Elbow - 1 1/16-12 MJIC x 1 1/16-12 MORB	1
16	N29358	Connector - 9/16-18 MJIC x 9/16-18 MORB	1
17	W-522	Lockwasher - 5/16	2
18	W-513	Hex Nut - 5/16	2
19	S-1303	Hex Bolt - 5/16 x 2 Lg	2
20	N16621	Plug - 9/16-18 MORB	1
21	N34577	Tag - Hose ID Tank - Fan/Auger - RETURN	1
22	N34576	Tag - Hose ID - Tank - Fan/Auger - PRESSURE	1
23	N34578	Tag - Hose ID - Tank - Fan/Auger - CASE DRAIN	1
24	C14840	Connector - 3/4-16 MORB x 7/8-14 MJIC	1
24A	C15330	Connector - 3/4-16 MORB x 3/4-16 MJIC (10178)	1
24B	C-4469	Connector - 7/8-14 (#10) MJIC	4
25	K50834	3/8 Flat Face Tip - 3/4-16 FORB	1
26	N37914	3/4 Male Pioneer Tip - 1 1/16-12 FORB	2
27	N34498	1/2 Male Pioneer Tip - 7/8-14 FORB	7
28	N34488	1/2 Female Pioneer Coupler - 7/8-14 FORB	6
29	S37662	Tag - Hose ID - Wing Lift - UNFOLD	2
30	S37661	Tag - Hose ID - Wing Lift - FOLD	2
31	S37663	Tag - Hose ID - Depth Control - LOWER	2
32	S37664	Tag - Hose ID - Depth Control - RAISE	2
33	S44456	Tag - Hose ID - Case Drain	1
33A	N59870	Tag - Hose ID - Auxilary Circuit	1
34	N34620	Connector - 7/8-14 FJIC x 7/8-14 MORB	4
35	H24393	90 Elbow - 7/8-14 MJIC	6
36	N37348	Oil Line - 5/8 x 84 Lg w/ 7/8-14 FJIC	4
37	C-4370	Oil Line - 5/8 x 128 Lg w/ 7/8-14 FJIC	4
38	N16608	Coupler Clamp - Female Pioneer	6
39	N19458	Spacer Bushing - 0.540 OD x 2	4
39A	N19155	Spacer Bushing - 0.540 OD x 1/2	2
40	S13337	Hex Bolt - 5/16 x 6 Lg	2
41	W-469	Hex Bolt - 1/4 x 3/4 Lg	6
42	W-521	Lockwasher - 1/4	6
43	W-512	Hex Nut - 1/4	6
44	W-522	Lockwasher - 5/16	2
45	W-513	Hex Nut - 5/16	2
46	N37403	Hyd Hose - 1/2 x 192 Lg - 7/8-14 MJIC x 7/8-14 MORB	2
46A	S22403	Hyd Hose - 1/2 x 120 Lg - 7/8-14 FJIC	2
47	C-4387	Hyd Hose - 1/2 x 36 Lg w/7/8-14 MJIC x 7/8-14 FJIC Swivel	4
48	D-4838	Tie Strap - 14 1/2 Lg	15
48A	D-4951	Tie Strap - 7 3/8 Lg	15
48B	S13336	Tie Strap - 24 Lg	3
49	C-4698	Nylon Oil Line Clamp (STD-4) (Tillage-24)	30
50	W-479	Hex Bolt - 3/8 x 2 1/4 Lg	3
51	C-3664	Hex Bolt - 3/8 x 5 1/2 Lg	4
52	W-538	Flatwasher - 3/8	7
53	M-3388	Locknut - 3/8	7

Hydraulic Standard - 9800 Tow Between

Item	Part No.	Description	Qty
Auger System			
54	C26344	Auger - Hyd Hose - 1/2 x 42 Lg w/7/8-14 FJIC	1
55	C-4388	Auger - Hyd Hose - 1/2 x 48 Lg w/ 7/8-14 MJIC x 7/8-14 FJIC	1
56	C-4469	Connector - 7/8-14 MJIC	1
57	K-5806	Auger - 90 Elbow - Swivel - 7/8-14 MJIC x 7/8-14 FJIC	2
58	N47903	Auger - Connector - 7/8-14 MJIC x 1 1/16-12 MORB	2
59	N58555	Auger - Valve Block	1
	N19023	Decal - Danger “HOT” (Not Shown)	1
	N36263	Decal - Warning “BURN HAZARD” (Not Shown)	1
	N36443	Decal - Auger “LEVER POSITION” (Not Shown)	1
	N19031	Decal - “AUGER / FAN” (Not Shown)	1
60	N36833	Oil Line - 1 x 94 Lg w/ 1 5/16-12 FJIC (#16)	4
61	N58170	Hyd Hose - 3/4 x 192 Lg - 1 5/16-12 MJIC (#16) x 7/8-14 MORB (#10)	2
62	N58168	Hyd Hose - 3/4 x 36 Lg - 1 5/16-12 MJIC Ends	2
63	N58169	Hyd Hose - 3/4 x 36 Lg - 1 5/16 -12 MJIC (#16) x 7/8 -14 MORB	2
64	N58171	90 Elbow - 1 5/16-12 MJIC x 1 5/16-12 FJIC Swivel	2
65	D-4808	Oil Line Clamp	8
66	S31476	Plate Spacer - 1 1/2 x 1 1/2 x 1/2 thick	4
67	N58670	Case Drain Header	1
68	C28505	Plug - 3/4-16 MORB	1
	C15317	90 Elbow - 3/4-16 MJIC x 3/4-16 MORB - Used for additional Case Drain	
69	N34646	90 Elbow - 7/8-14 MJIC x 1 1/16-12 MORB	1
70	F-4565	Hyd Hose - 1/2 x 60 Lg w/7/8-14 FJIC	1
71	C15319	Hex Bolt - 1/4 x 2 1/2 Lg	3
72	N64583	Coupler - Test Port - 7/16-20 (#4) MORB	2
73	K62978	Tee - Gauge Port - 7/8-14 (#10) MJIC x 7/8-14 (#10) FJIC x 7/16-20 (#4) FORB	2

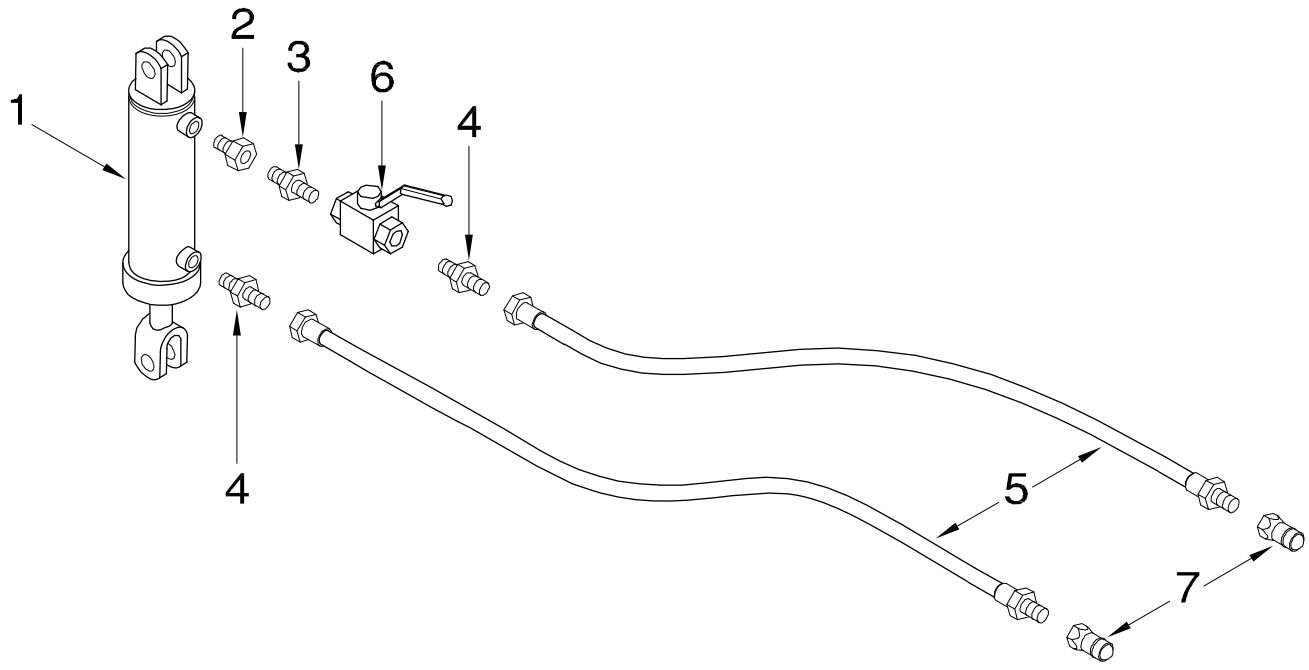

Item	Part No.	Description	Qty
1	C39175	Cylinder - 3 1/2 x 12	1
2	N34503	Connector - 3/4-16 FJIC x 3/4-16 MORB	1
3	C15330	Connector - 3/4-16 MJIC x 3/4-16 MORB	1
4	C15348	Connector - 9/16-18 MJIC x 3/4-16 MORB	2
5	N37404	Hyd Hose - 3/8 x 152 Lg w/ 9/16-18 FJIC x 7/8-14 MORB	2
6	N42880	Valve - 2 Way Ball	1
6A	N42881	Handle - Valve	1
7	N34498	Male Pioneer Tip - 7/8-14 FORB	2

Dual Fan Hydraulic - Option
Tow Behind

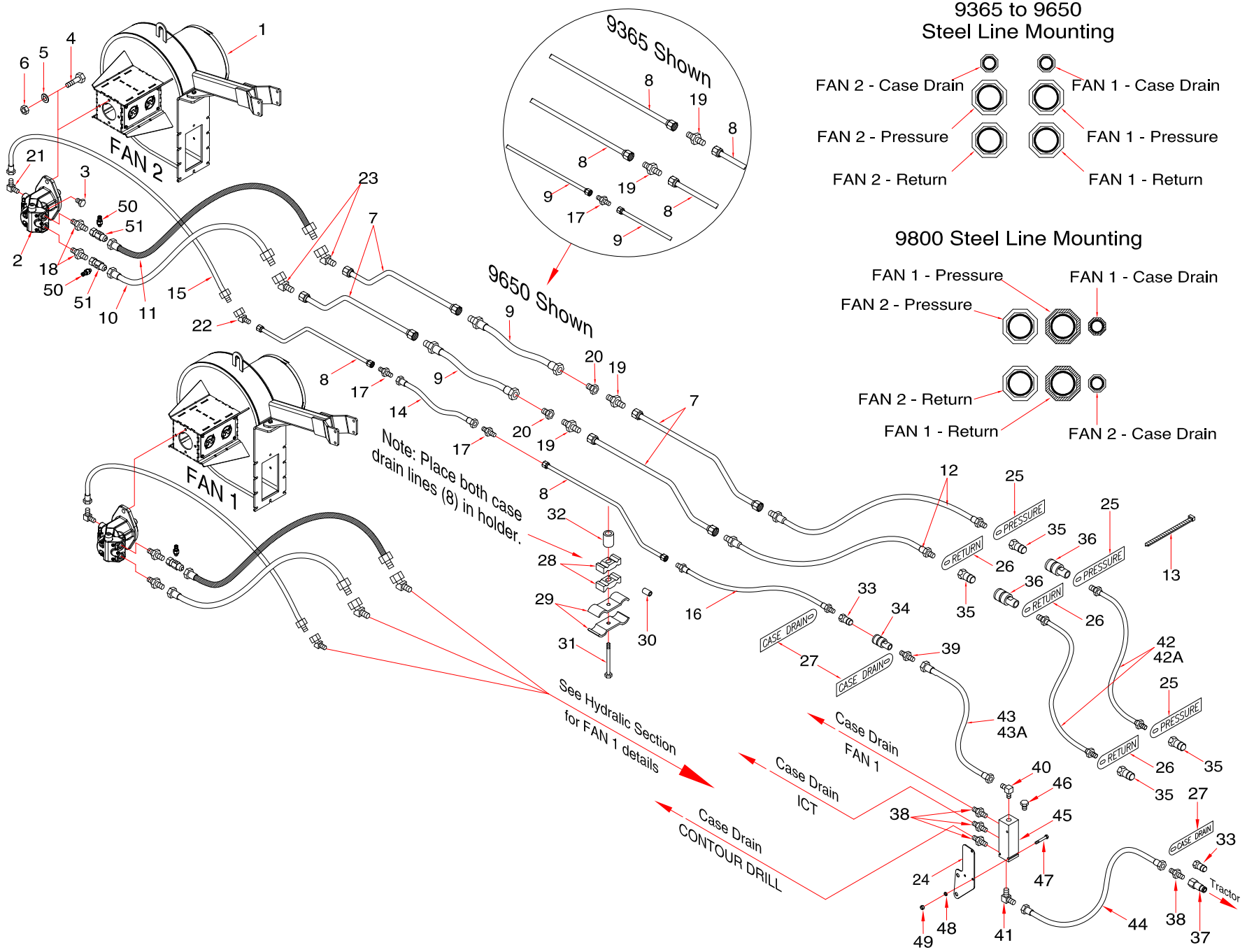

Dual Fan - Tow Behind - 2016 to Present

Item	Part No.	Description	Qty
1	N37826	Fan - See Section 11	1
2	N53243	Hydraulic Motor W/ Internal Check Valve - Rexroth - See Section 11	1
3	N16621	Plug - 9/16-18 MORB	1
4	S-1189	Hex Bolt - 1/2 x 1 3/4 Lg	2
5	W-525	Lockwasher - 1/2	6
6	W-516	Hex Nut - 1/2	6
7	N36833	Oil Line - 1 x 94 Lg w / 6 Offset Bend x 1 5/16-12 FJIC	4
8	N36444	Oil Line - 1/2 x 94 Lg w / 6 Offset Bend x 3/4-16 FJIC	2
9	N19434	Hyd Hose - 3/4 x 35 Lg w/1 5/16-12 MJIC x 1 1/16-12 FJIC - (9445, 9550, 9650) (9800)	4
10	N53247	Hyd Hose - 3/4 x 72 Lg w/1 5/16-12 MJIC x 7/8-14 FJIC	1
11	N53249	Hyd Hose - 3/4 x 78 Lg w/1 5/16-12 MJIC x 7/8-14 FJIC	1
12	N37037	Hyd Hose - 3/4 x 270 Lg w/1 5/16-12 MJIC x 1 1/16-12 MORB - (9365, 9450, 9535)	2
	N56061	Hyd Hose - 3/4 x 330 Lg w/1 5/16-12 MJIC x 1 1/16-12 MORB - (9445, 9550, 9650) (9800)	2
13	D-4951	Nylon Tie Strap - 7 3/8 Lg	12
14	D10821	Hyd Hose - 3/8 x 38 Lg w/3/4-16 FJIC - (9445, 9550, 9650) (9800)	1
15	N53492	Hyd Hose - 3/8 x 72 Lg w/9/16-18 FJIC x 3/4-16 MJIC	1
16	N37180	Hyd Hose - 3/8 x 270 Lg w/3/4-16 MJIC x 7/8-14 MORB - (9365, 9450, 9535)	1
	N56063	Hyd Hose - 3/8 x 330 Lg w/3/4-16 MJIC x 7/8-14 MORB - (9445, 9550, 9650) (9800)	1
17	N25754	Connector - 3/4-16 MJIC	2
18	N34505	Connector - 7/8-14 (#10) MJIC x 7/8-14 (#10) MORB	2
19	N16346	Connector - 1 5/16-12 MJIC	2
20	N19338	Connector - 1 5/16-12 FJIC x 1 1/16-12 MJIC - (9445, 9550, 9650) (9800)	2
21	N16143	90 Elbow - Swivel - 9/16-18 JIC x 9/16-18 ORB	1
22	N36380	45 Elbow - Swivel - 3/4-16 FJIC x 3/4-16 MJIC	1
23	N36382	45 Elbow - Swivel - 1 5/16-12 FJIC x 1 5/16-12 MJIC	2
24	N58671	Plate - Case Drain Header Mount	1
25	N58340	Tag - Hose ID - Air Tank - Fan 2 - PRESSURE	3
26	N58341	Tag - Hose ID - Air Tank - Fan 2 - RETURN	3
27	N58342	Tag - Hose ID - Air Tank - Fan 2 - CASE DRAIN	3
28	C-4698	Nylon Oil Line Clamp	14
29	D-4808	Oil Line Clamp	8
30	N21632	Oil Line Spacer	4
31	C-3664	Hex Bolt - 3/8 x 5 1/2 Lg	4
32	N15559	Spacer - 0.385 ID x 5/8 OD x 1 Lg	4
33	N34498	1/2 Male Pioneer Tip - 7/8-14 FORB	2
34	N34488	1/2 Pioneer Coupler - 7/8-14 FORB	1
35	N37914	3/4 Male Tip - 1 1/16-12 FORB	2
36	N37915	3/4 Female Coupler - 1 1/16-12 FORB	2
37	K50834	3/8 Flat Face Tip - 3/4-16 FORB	1
38	C14840	Connector - 3/4-16 MORB x 7/8-14 MJIC	4
39	N34505	Connector - Swivel - 7/8-14 MORB x 7/8-14 MJIC	1
40	C24585	90 Elbow - 7/8-14 MJIC x 3/4-16 MORB	1
41	N34646	90 Elbow - 7/8-14 MJIC x 1 1/16-12 MORB	1
42	N37036	Hyd Hose - 3/4 x 396 Lg w/1 1/16-12 MORB (3-Frame Contour Air Drill)	2
42A	N37035	Hyd Hose - 3/4 x 348 Lg w/1 1/16-12 MORB	2
42B	N44955	Hyd Hose - 3/4 x 456 Lg w/1 1/16-12 MORB (5-Frame Contour Air Drill)	2
43	N50099	Hyd Hose - 3/8 x 348 Lg w/7/8-14 FJIC x 7/8-14 FJIC Swivel End	1
43A	N55806	Hyd Hose - 3/8 x 300 Lg w/7/8-14 FJIC Ends	1
43B	N50088	Hyd Hose - 3/8 x 396 Lg w/7/8-14 FJIC Ends (5-Frame Contour Air Drill)	1
44	F-4565	Hyd Hose - 1/2 x 60 Lg w/7/8-14 FJIC	1
45	N58670	Case Drain Header	1
46	C28505	Plug - 3/4-16 MORB - Used on Ports not in use on Case Drain Header	1
47	C15319	Hex Bolt - 1/4 x 2 1/2 Lg	3
48	W-521	Lockwasher - 1/4	3
49	W-512	Hex Nut - 1/4	3
50	N64583	Coupler - Test Port - 7/16-20 (#4) MORB	2
51	K62978	Tee - Gauge Port - 7/8-14 (#10) MJIC x 7/8-14 (#10) FJIC x 7/16-20 (#4) FORB	2

Dual Fan Hydraulic - Option
Tow Between

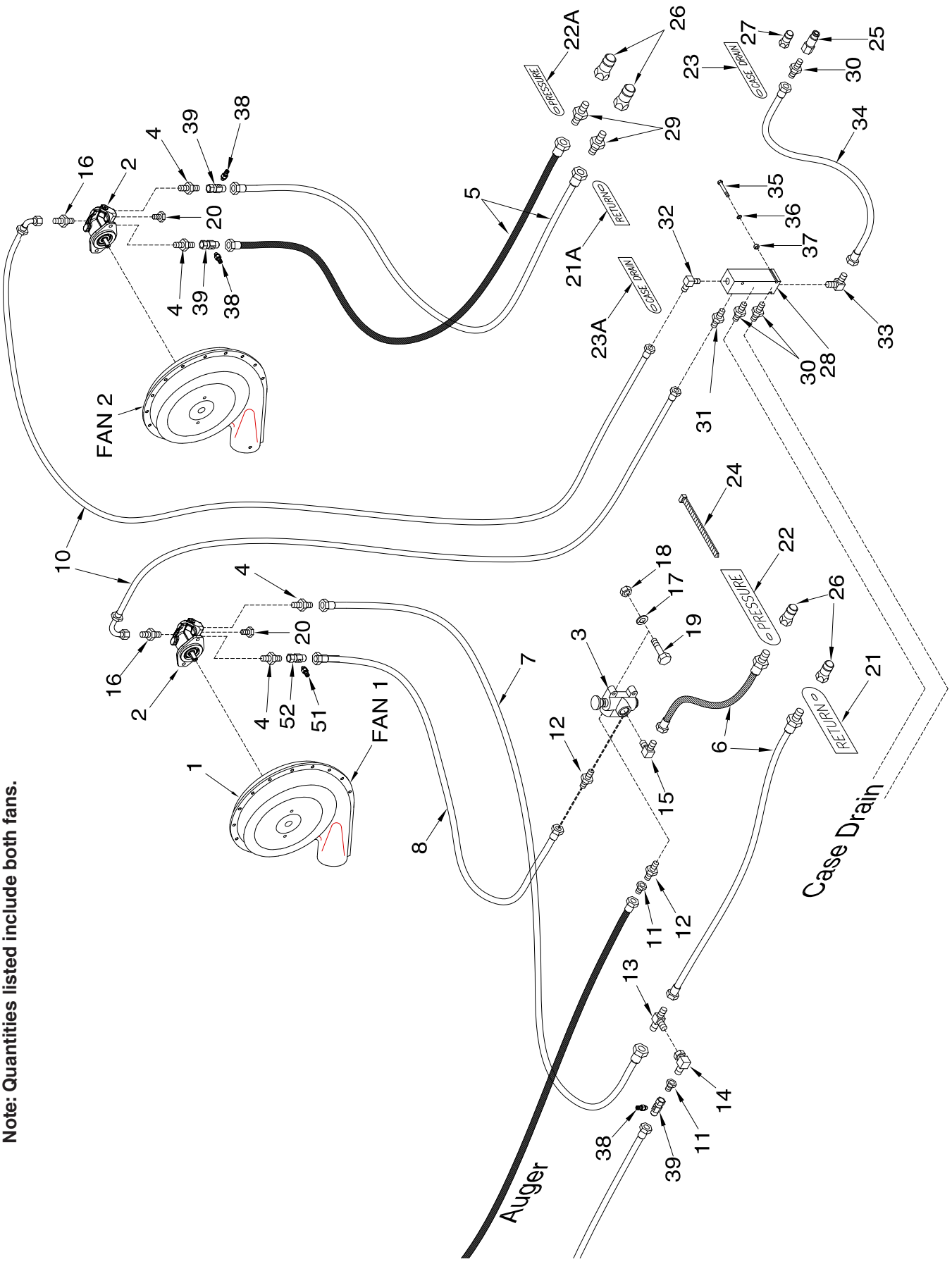

Note: Quantities listed include both fans.

Dual Fan - Tow Between

Item	Part No.	Description	Qty
1	* * * * *	Fan - See Section 11	2
2	N53243	Hydraulic Motor W/ Internal Check Valve - Rexroth - See Section 11	2
3	N37514	Selector Valve (Seal Kit # N31603) (Knob # C26358)	1
4	N34505	Connector - 7/8-14 (#10) MJIC x 7/8-14 (#10) MORB	4
5	N53484	Hyd Hose - 3/4 x 150 Lg - 7/8-14 FJIC swivel ends	2
6	N37038	Hyd Hose - 3/4 x 84 Lg w/ 1 1/16-12 MORB x 1 1/16-12 FJIC	2
7	N53494	Hyd Hose - 3/4 x 66 - 1 1/16-12 FJIC x 7/8-14 FJIC swivel end	1
8	N53496	Hyd Hose - 3/4 x 54 - 1 1/16-12 FJIC x 7/8-14 FJIC swivel end - 9365 to 9650	1
7	N53494	Hyd Hose - 3/4 x 66 - 1 1/16-12 FJIC x 7/8-14 FJIC swivel end - 9800	1
9	F-5679	Hyd Hose - 1/2 x 96 Lg w/7/8-14 MJIC x 7/8-14 FJIC - 9365 to 9650	2
	N55169	Hyd Hose - 1/2 x 108 Lg w/7/8-14 MJIC x 7/8-14 FJIC swivel end - 9800	2
10	N37421	Hyd Hose - 3/8 x 108 - 3/4-16 FJIC x 9/16-18 FJIC w/90 Bend	2
11	N19337	Connector - 7/8-14 MJIC x 1 1/16-12 FJIC	2
12	N15990	Connector - 1 1/16-12 MJIC x 1 1/16-12 MORB	2
13	N19549	Tee - 1 1/16 MJIC	1
14	N21189	90 Elbow - Swivel - 1 1/16-12 FJIC x 1 1/16-12 MJIC	1
15	N16359	90 Elbow - 1 1/16-12 MJIC x 1 1/16-12 MORB	1
16	N29358	Connector - 9/16-18 MJIC x 9/16-18 MORB	2
17	W-522	Lockwasher - 5/16	2
18	W-513	Hex Nut - 5/16	2
19	S-1303	Hex Bolt - 5/16 x 2 Lg	2
20	N16621	Plug - 9/16-18 MORB	2
21	N34577	Tag - Hose ID Tank - Fan/Auger - RETURN	1
21A	N58341	Tag - Hose ID - Air Tank - Fan 2 - RETURN	1
22	N34576	Tag - Hose ID - Tank - Fan/Auger - PRESSURE	1
22A	N58340	Tag - Hose ID - Air Tank - Fan 2 - PRESSURE	1
23	N34578	Tag - Hose ID - Tank - Fan/Auger - CASE DRAIN	1
23A	N58342	Tag - Hose ID - Air Tank - Fan 2 - CASE DRAIN	1
24	D-4951	Nylon Tie Strap -7 3/8 Lg	7
	D-4838	Nylon Tie Strap -14 1/2 Lg	2
25	K50834	3/8 Flat Face Tip - 3/4-16 FORB	1
26	N37914	3/4 Male Pioneer Tip - 1 1/16-12 FORB	2
27	N34498	1/2 Male Pioneer Tip - 7/8-14 FORB	7
28	N58670	Case Drain Header	1
29	N47903	Connector - 7/8-14 MJIC x 1 1/16-12 MORB	2
30	C14840	Connector - 3/4-16 MORB x 7/8-14 MJIC	3
31	C15330	Connector - 3/4-16 MORB x 3/4-16 MJIC (10178)	1
32	C24585	90 Elbow - 7/8-14 MJIC x 3/4-16 MORB	1
33	N34646	90 Elbow - 7/8-14 MJIC x 1 1/16-12 MORB	1
34	F-4565	Hyd Hose - 1/2 x 60 Lg w/7/8-14 FJIC	1
35	C15319	Hex Bolt - 1/4 x 2 1/2 Lg	3
36	W-521	Lockwasher - 1/4	3
37	W-512	Hex Nut - 1/4	3
38	N64583	Coupler - Test Port - 7/16-20 (#4) MORB	4
39	K62978	Tee - Gauge Port - 7/8-14 (#10) MJIC x 7/8-14 (#10) FJIC x 7/16-20 (#4) FORB	4

Dual Flow Hydraulics - 12” Auger - Option
9800 and 91000 Tow Behind - Single Fan

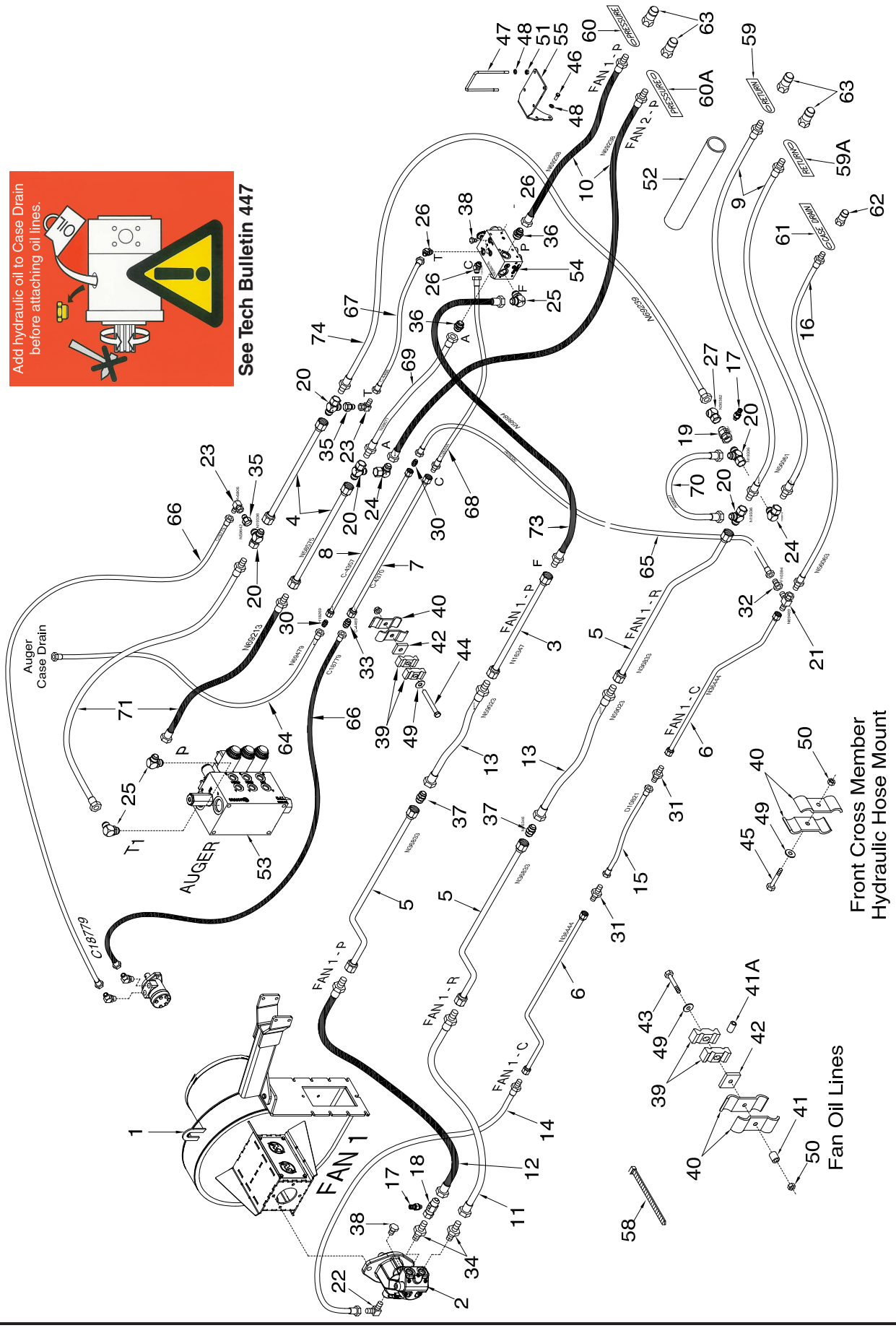

Dual Flow Hydraulics - 9800 and 91000 Tow Behind - Single Fan

Item	Part No.	Description	Qty
Cart System			
1	* * * * *	Fan - See Section 11	1
2	N53243	Hydraulic Motor W/ Internal Check Valve - Rexroth - See Section 11	1
3	N16347	Oil Line - 1 x 72 Lg -1 5/16-12 FJIC (#16)	1
4	N58575	Oil Line - 1 x 96 Lg - 1 5/16-12 FJIC (#16)	2
5	N36833	Oil Line - 1 x 94 Lg - 6 Offset Bend x 1 5/16-12 FJIC (#16)	3
6	N36444	Oil Line - 1/2 x 94 Lg - 6 Offset Bend x 3/4-16 FJIC	2
7	C-4370	Oil Line - 5/8 x 128 Lg - 7/8-14 FJIC	1
8	C-4357	Oil Line - 3/8 x 130 1/2 Lg - 9/16-18 FJIC	1
9	N56061	Hyd Hose - 3/4 x 330 Lg - 1 5/16-12 MJIC (#16) x 1 1/16-12 MORB (#12)	2
10	N69238	Hyd Hose - 3/4 x 330 Lg - 1 5/16-12 FJIC (#16) x 1 1/16-12 MORB (#12)	2
11	N53493	Hyd Hose - 3/4 x 48 Lg - 1 5/16-12 MJIC x 7/8-14 FJIC - (Fan 1)	1
12	N53495	Hyd Hose - 3/4 x 54 Lg - 1 5/16-12 MJIC x 7/8-14 FJIC - (Fan 1)	1
13	N59023	Hyd Hose - 3/4 x 48 Lg - 1 5/16-12 MJIC x 1 5/16-12 FJIC swivel	2
14	N19475	Hyd Hose - 3/8 x 48 Lg - 9/16-18 FJIC x 3/4-16 MJIC - (Fan 1)	1
15	D10821	Hyd Hose - 3/8 x 38 Lg - 3/4-16 FJIC	1
16	N56063	Hyd Hose - 3/8 x 330 Lg - 3/4-16 MJIC x 7/8-14 MORB	1
17	N64583	Coupler - Test Port - 7/16-20 (#4) MORB	2
18	K62978	Tee - Gauge Port - 7/8-14 (#10) MJIC x 7/8-14 (#10) FJIC x 7/16-20 (#4) FORB	1
19	N64584	Tee - Gauge Port - 1 5/16-12 (#16) MJIC X 1 5/16-12 (#16) FJIC x 7/16-20 (#4) FORB	1
20	N19336	Tee - Swivel - (1) 1 5/16-12 FJIC x (2) 1 5/16-12 MJIC	5
21	N69469	Tee - Swivel- (2) 3/4-16 (#08) MJIC x (1) 3/4-16 (#08) FJIC (MMF)	1
22	N16143	90 Elbow - Swivel - 9/16-18 MJIC x 9/16-18 MORB	1
23	K-5806	90 Elbow - Swivel - 7/8-14 MJIC x 7/8-14 FJIC	2
24	N58616	90 Elbow - 1 5/16-12 MJIC (#16) x 1 5/16-12 FJIC (#16)	2
25	N58576	90 Elbow - 1 5/16-12 MJIC (#16) x 1 5/16-12 MORB (#16)	3
26	C26333	45 Elbow - 7/8-14 (#10) MJIC x 3/4-16 (#08) MORB	2
27	N36382	45 Elbow - Swivel - 1 5/16-12 FJIC (#16) x 1 5/16-12 MJIC (#16)	1
28	* * * * *		
29	* * * * *		
30	H18269	Connector - 9/16-18 MJIC	2
31	N25754	Connector - 3/4-16 MJIC	2
32	F10384	Connector - 7/8-14 (#10) FJIC x 9/16-18 (#06) MJIC	1
33	C-4469	Connector - 7/8-14 MJIC (#10)	1
34	N34505	Connector - 7/8-14 (#10) MJIC x 7/8-14 (#10) MORB	2
35	N58642	Connector - 7/8-14 MJIC (#10) x 1 5/16-12 MJIC (#16)	2
36	N58621	Connector - 1 5/16-12 MJIC (#16) x 1 5/16-12 MORB (#16)	2
37	N16346	Connector - 1 5/16-12 MJIC (#16)	2
38	N29365	Plug - 9/16-18 MORB	4
39	C-4698	Nylon Oil Line Clamp	12
40	D-4808	Oil Line Clamp	14
41	N16257	Oil Line Spacer - 3/8 ID x 5/8 OD x 5/8 Lg	4
41A	N21632	Oil Line Spacer - 3/8 ID x 9/16 OD x 3/4 Lg	4
42	S31476	Plate Spacer - 1/2	6
43	C-1550	Hex Bolt - 3/8 x 4 Lg	4
44	S-1299	Hex Bolt - 3/8 x 4 1/2 Lg	2
45	W-477	Hex Bolt - 3/8 x 1 1/2 Lg	1
46	W-475	Hex Bolt - 3/8 x 1	3
47	N25457	U-Bolt - 3/8 x 4 x 8	2
48	W-523	Lock Washer 3/8	7
49	W-538	Flatwasher - 3/8	7
50	M-3388	Locknut - 3/8	8
51	W-514	Hex Nut 3/8	4
52	N62246	Hydraulic Hose Sleeve - 3” Dia x 36” Lg	1
53	**N58349**	**Auger - Valve - Solenoid - Hydraulic Assist Auger - 45 gpm**	**1**
54	**N58618**	**Selector Valve - Dual Flow Auger - Ground Drive**	**1**
55	N69202	Mount Bracket	1
56	* * * * *		
57	* * * * *		
58	D-4838	Tie Strap - 14 1/2 Lg	16
	D-4951	Tie Strap - 7 3/8 Lg	9

Dual Flow Hydraulic - 9800 and 91000 Tow Behind - Single Fan

Item	Part No.	Description	Qty
59	N34577	Tag - Hose ID Tank - Fan/Auger - RETURN	1
59A	N58341	Tag - Hose ID - Air Tank - Fan 2 - RETURN	1
60	N34576	Tag - Hose ID - Tank - Fan/Auger - PRESSURE	1
60A	N58340	Tag - Hose ID - Air Tank - Fan 2 - PRESSURE	1
61	N34578	Tag - Hose ID - Tank - Fan/Auger - CASE DRAIN	1
62	N34498	1/2 Male Pioneer Tip - 7/8-14 FORB (Cart - 1)	1
63	N37914	3/4 Male Pioneer Tip - 1 1/16-12 FORB (Cart - 2)	4
64	N69479	Hyd Hose - 3/8 x 290 Lg w/ #6 9/16-18 FJIC	1
65	N53696	Hyd Hose - 3/8 x 66 Lg w/9/16-18 FJIC	1
66	C18779	Hyd Hose - 1/2 x 72 Lg w/7/8-14 FJIC	2
67	C-4468	Hyd Hose - 1/2 x 24 Lg w/7/8-14 FJIC	1
68	C26444	Hyd Hose - 1/2 x 16 Lg w/7/8-14 MJIC x 7/8-14 FJIC	1
69	N58677	Hyd Hose - 3/4 x 14 Lg - 1 5/16-12 MJIC x 1 5/16-12 FJIC swivel	1
70	N58681	Hyd Hose - 3/4 x 24 Lg - 1 5/16-12 FJIC swivel ends	1
71	N69213	Hyd Hose - 3/4 x 62 Lg - 1 5/16-12 FJIC (#16) x 1 5/16-12 MJIC (#16)	2
72	* * * * *		
73	N58684	Hyd Hose - 3/4 x 72 Lg - 1 5/16-12 MJIC x 1 5/16-12 FJIC swivel end	1
74	N69239	Hyd Hose - 3/4 x 78 Lg - 1 5/16-12 FJIC (#16) x 1 5/16-12 MJIC (#16)	1
	N19023	Decal - Danger “HOT” (Not Shown)	1
	N36263	Decal - Warning “BURN HAZARD” (Not Shown)	1
	N36443	Decal - Auger “LEVER POSITION” (Not Shown)	1
	N71602	Decal - “AUGER / FAN / “CALIBRAITON” (Not Shown)	1

Dual Flow Hydraulics - 12” Auger - Option
9800 and 91000 Tow Behind - Dual Fan

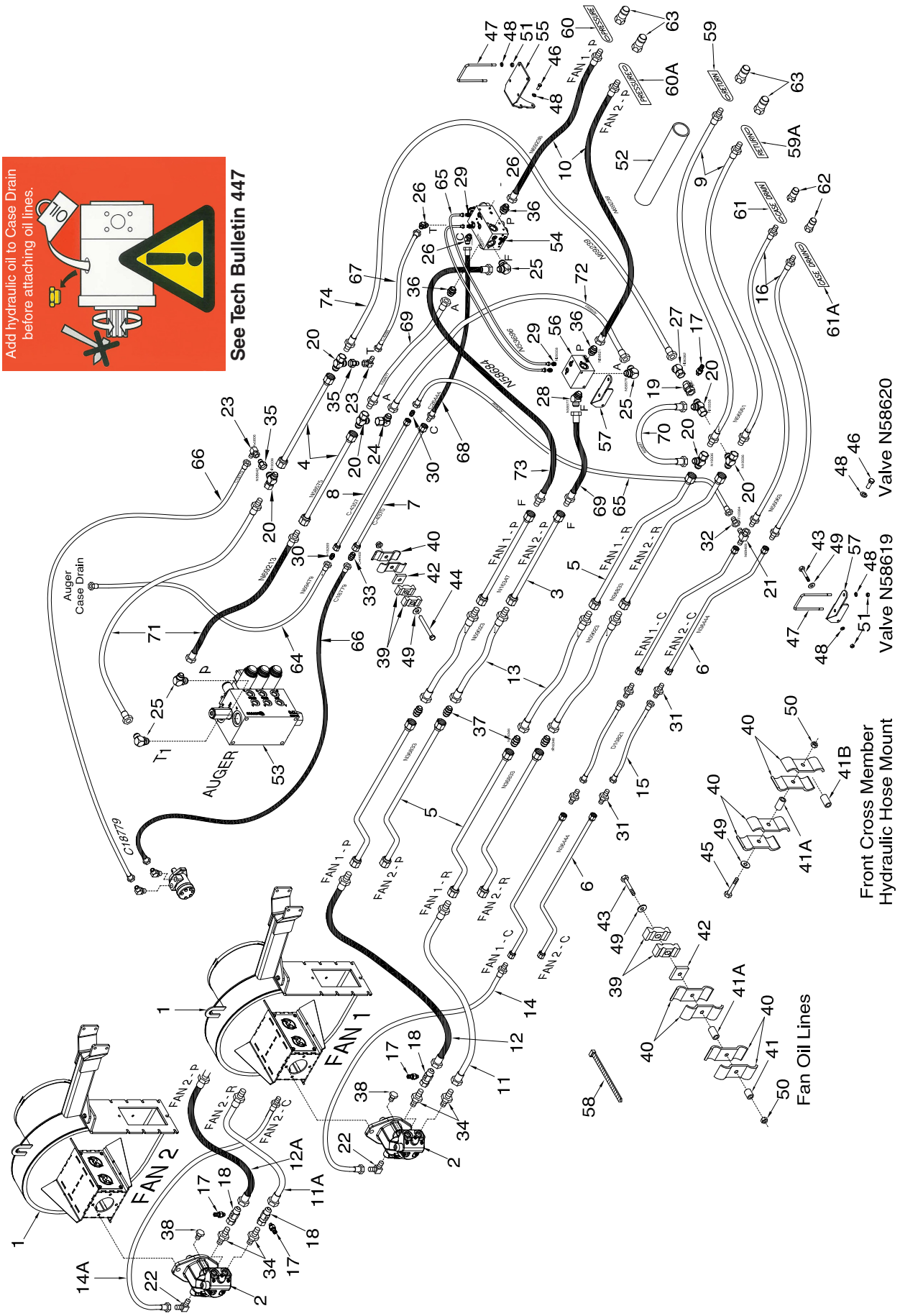

Dual Flow Hydraulic - 9800 and 91000 Tow Behind - Dual Fan

Item	Part No.	Description	Qty
Cart System			
1	* * * * *	Fan - See Section 11	2
2	N53243	Hydraulic Motor W/ Internal Check Valve - Rexroth - See Section 11	2
3	N16347	Oil Line - 1 x 72 Lg -1 5/16-12 FJIC (#16)	2
4	N58575	Oil Line - 1 x 96 Lg - 1 5/16-12 FJIC (#16)	2
5	N36833	Oil Line - 1 x 94 Lg - 6 Offset Bend x 1 5/16-12 FJIC (#16)	6
6	N36444	Oil Line - 1/2 x 94 Lg - 6 Offset Bend x 3/4-16 FJIC	4
7	C-4370	Oil Line - 5/8 x 128 Lg - 7/8-14 FJIC	1
8	C-4357	Oil Line - 3/8 x 130 1/2 Lg - 9/16-18 FJIC	1
9	N56061	Hyd Hose - 3/4 x 330 Lg - 1 5/16-12 MJIC (#16) x 1 1/16-12 MORB (#12)	2
10	N69238	Hyd Hose - 3/4 x 330 Lg - 1 5/16-12 FJIC (#16) x 1 1/16-12 MORB (#12)	2
11	N53493	Hyd Hose - 3/4 x 48 Lg - 1 5/16-12 MJIC x 7/8-14 FJIC - (Fan 1)	1
11A	N53247	Hyd Hose - 3/4 x 72 Lg - 1 5/16-12 MJIC x 7/8-14 FJIC - (Fan 2)	1
12	N53495	Hyd Hose - 3/4 x 54 Lg - 1 5/16-12 MJIC x 7/8-14 FJIC - (Fan 1)	1
12A	N53249	Hyd Hose - 3/4 x 78 Lg - 1 5/16-12 MJIC x 7/8-14 FJIC - (Fan 2)	1
13	N59023	Hyd Hose - 3/4 x 48 Lg - 1 5/16-12 MJIC x 1 5/16-12 FJIC swivel	4
14	N19475	Hyd Hose - 3/8 x 48 Lg - 9/16-18 FJIC x 3/4-16 MJIC - (Fan 1)	1
14A	N53492	Hyd Hose - 3/8 x 72 Lg - 9/16-18 FJIC x 3/4-16 MJIC - (Fan 2)	1
15	D10821	Hyd Hose - 3/8 x 38 Lg - 3/4-16 FJIC	2
16	N56063	Hyd Hose - 3/8 x 330 Lg - 3/4-16 MJIC x 7/8-14 MORB	2
17	N64583	Coupler - Test Port - 7/16-20 (#4) MORB	4
18	K62978	Tee - Gauge Port - 7/8-14 (#10) MJIC x 7/8-14 (#10) FJIC x 7/16-20 (#4) FORB	3
19	N64584	Tee - Gauge Port - 1 5/16-12 (#16) MJIC X 1 5/16-12 (#16) FJIC x 7/16-20 (#4) FORB	1
20	N19336	Tee - Swivel - (1) 1 5/16-12 FJIC x (2) 1 5/16-12 MJIC	6
21	N69469	Tee - Swivel- (2) 3/4-16 (#08) MJIC x (1) 3/4-16 (#08) FJIC (MMF)	1
22	N16143	90 Elbow - Swivel - 9/16-18 MJIC x 9/16-18 MORB	2
23	K-5806	90 Elbow - Swivel - 7/8-14 MJIC x 7/8-14 FJIC	2
24	N58616	90 Elbow - 1 5/16-12 MJIC (#16) x 1 5/16-12 FJIC (#16)	1
25	**N58576**	**90 Elbow - 1 5/16-12 MJIC (#16) x 1 5/16-12 MORB (#16)**	**4**
26	C26333	45 Elbow - 7/8-14 (#10) MJIC x 3/4-16 (#08) MORB	2
27	N36382	45 Elbow - Swivel - 1 5/16-12 FJIC **(#16)** x 1 5/16-12 MJIC **(#16)**	1
28	N58577	45 Elbow - 1 5/16-12 (#16) MJIC x 1 5/16-12 (#16) MORB	1
29	N29358	Connector - 9/16-18 MJIC x 9/16-18 MORB	4
30	H18269	Connector - 9/16-18 MJIC	2
31	N25754	Connector - 3/4-16 MJIC	2
32	F10384	Connector - 7/8-14 (#10) FJIC x 9/16-18 (#06) MJIC	1
33	C-4469	Connector - 7/8-14 MJIC (#10)	1
34	N34505	Connector - 7/8-14 (#10) MJIC x 7/8-14 (#10) MORB	4
35	N58642	Connector - 7/8-14 MJIC (#10) x 1 5/16-12 MJIC (#16)	2
36	N58621	Connector - 1 5/16-12 MJIC (#16) x 1 5/16-12 MORB (#16)	3
37	N16346	Connector - 1 5/16-12 MJIC (#16)	4
38	N16621	Plug - 9/16-18 MORB	2
39	C-4698	Nylon Oil Line Clamp	14
40	D-4808	Oil Line Clamp	10
41	N16257	Oil Line Spacer - 3/8 ID x 5/8 OD x 5/8 Lg	4
41A	N15559	Oil Line Spacer - 3/8 ID x 5/8 OD x 1 Lg	4
41B	D-5011	Oil Line Spacer - 21/32 ID x 1 OD x 1 9/16 Lg	1
42	S31476	Plate Spacer - 1/2	4
43	C-3664	Hex Bolt - 3/8 x 5 1/2 Lg N11461	4
44	S-1299	Hex Bolt - 3/8 x 4 1/2 Lg C-1550	2
45	D-5249	Hex Bolt - 3/8 x 3 1/4 Lg	1
46	W-475	Hex Bolt - 3/8 x 1	3
47	N25457	U-Bolt - 3/8 x 4 x 8	3
48	W-523	Lock Washer 3/8	11
49	W-538	Flatwasher - 3/8	7
50	M-3388	Locknut - 3/8	8
51	W-514	Hex Nut 3/8	8
52	N62246	Hydraulic Hose Sleeve - 3” Dia x 36” Lg	1
53	**N58349**	**Auger - Valve - Solenoid - Hydraulic Assist Auger - 45 gpm**	**1**
54	**N58618**	**Selector Valve - Dual Flow Auger - Ground Drive**	**1**
55	N69202	Mount Bracket	1

Dual Flow Hydraulic - 9800 and 91000 Tow Behind - Dual Fan

Item	Part No.	Description	Qty
56	**N58619**	**Diverter Valve - Fan 2**	**1**
57	N58643	Mount Bracket	1
58	D-4838	Tie Strap - 14 1/2 Lg	16
	D-4951	Tie Strap - 7 3/8 Lg	9
59	N34577	Tag - Hose ID Tank - Fan/Auger - RETURN	1
59A	N58341	Tag - Hose ID - Air Tank - Fan 2 - RETURN	1
60	N34576	Tag - Hose ID - Tank - Fan/Auger - PRESSURE	1
60A	N58340	Tag - Hose ID - Air Tank - Fan 2 - PRESSURE	1
61	N34578	Tag - Hose ID - Tank - Fan/Auger - CASE DRAIN	1
61A	N58342	Tag - Hose ID - Tank - Fan 2 - CASE DRAIN	1
62	N34498	1/2 Male Pioneer Tip - 7/8-14 FORB	2
63	N37914	3/4 Male Pioneer Tip - 1 1/16-12 FORB	4
64	N69479	Hyd Hose - 3/8 x 290 Lg w/ #6 9/16-18 FJIC	1
65	N53696	Hyd Hose - 3/8 x 66 Lg w/9/16-18 FJIC	3
66	C18779	Hyd Hose - 1/2 x 72 Lg w/7/8-14 FJIC	2
67	C-4468	Hyd Hose - 1/2 x 24 Lg w/7/8-14 FJIC	1
68	C26444	Hyd Hose - 1/2 x 16 Lg w/7/8-14 MJIC x 7/8-14 FJIC	1
69	N58677	Hyd Hose - 3/4 x 14 Lg - 1 5/16-12 MJIC x 1 5/16-12 FJIC swivel	2
70	N58681	Hyd Hose - 3/4 x 24 Lg - 1 5/16-12 FJIC swivel ends	1
71	N69213	Hyd Hose - 3/4 x 62 Lg - 1 5/16-12 FJIC (#16) x 1 5/16-12 MJIC (#16)	2
72	N58683	Hyd Hose - 3/4 x 66 Lg - 1 5/16-12 FJIC swivel ends	1
73	N58684	Hyd Hose - 3/4 x 72 Lg - 1 5/16-12 MJIC x 1 5/16-12 FJIC swivel end	1
74	N69239	Hyd Hose - 3/4 x 78 Lg - 1 5/16-12 FJIC (#16) x 1 5/16-12 MJIC (#16)	1
	N19023	Decal - Danger “HOT” (Not Shown)	1
	N36263	Decal - Warning “BURN HAZARD” (Not Shown)	1
	N36443	Decal - Auger “LEVER POSITION” (Not Shown)	1
	N71602	Decal - “AUGER / FAN / “CALIBRAITON” (Not Shown)	1

Dual Flow Hydraulics - 12” Auger - Option
9800 Tow Between - Single Fan

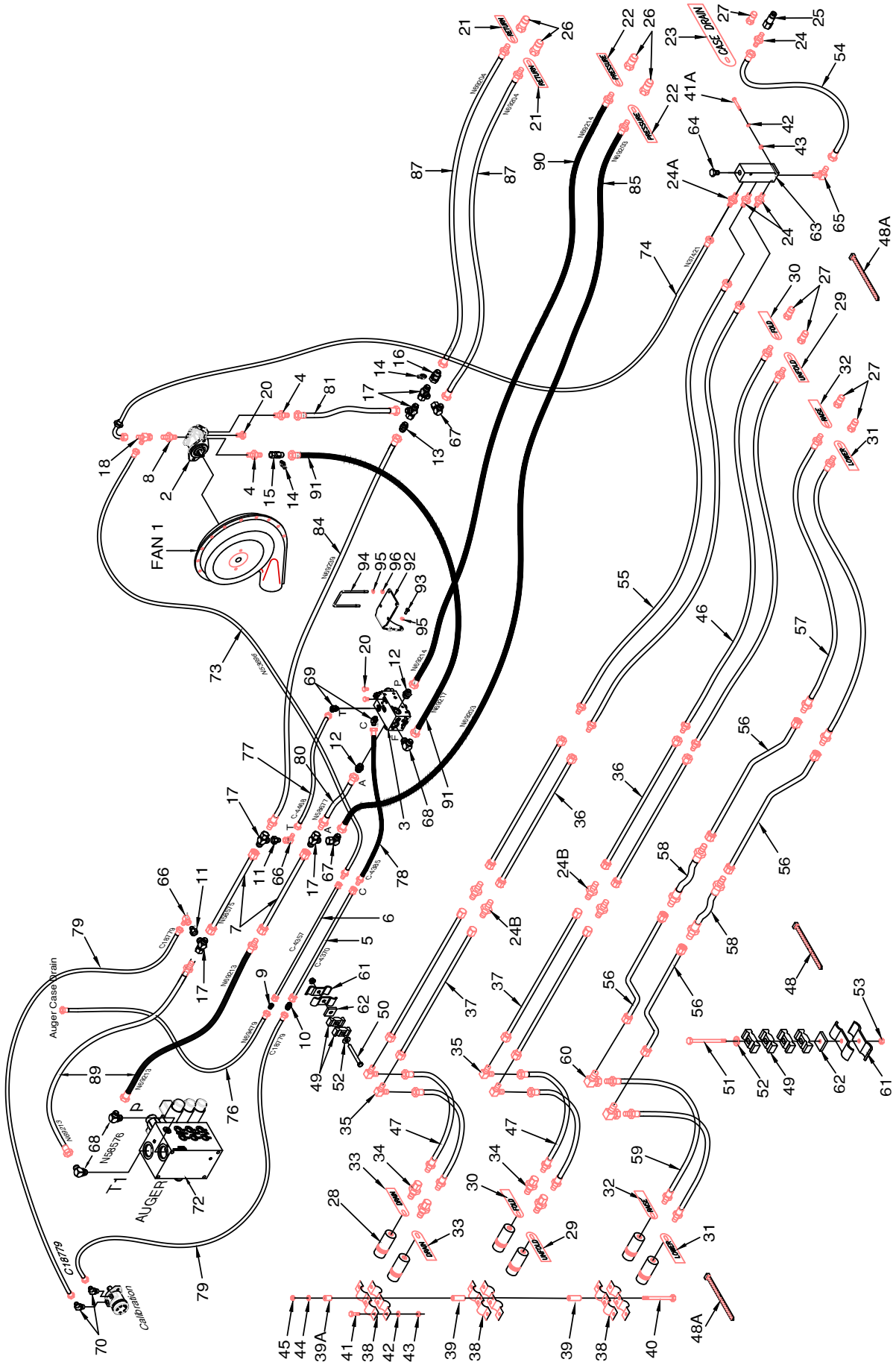

High Flow - 9800 Tow Between - Single Fan			
Item	**Part No.**	**Description**	**Qty**
1	* * * * *	Fan - See Section 11	1
2	N53243	Hydraulic Motor W/ Internal Check Valve - Rexroth - See Section 11	1
3	**N58618**	**Selector Valve - Dual Flow Auger**	**1**
4	N34505	Connector - 7/8-14 (#10) MJIC x 7/8-14 (#10) MORB	2
5	C-4370	Oil Line - 5/8 x 128 Lg w/ 7/8-14 FJIC	1
6	C-4357	Oil Line - 3/8 x 130 1/2 Lg w/ 9/16-18 FJIC	1
7	N58575	Oil Line - 1 x 96 Lg w/ 1 5/16-12 FJIC	2
8	N29358	Connector - 9/16-18 MJIC x 9/16-18 MORB	1
9	H18269	Connector - 9/16-18 MJIC	1
10	C-4469	Connector - 7/8-14 MJIC	1
11	N58642	Connector - 7/8-14 MJIC (#10) x 1 5/16-12 MJIC (#16)	2
12	N58621	Connector - 1 5/16-12 MJIC (#16) x 1 5/16-12 MORB (#16)	2
13	N16346	Connector - 1 5/16-12 MJIC	1
14	N64583	Coupler - Test Port - 7/16-20 (#4) MORB	2
15	K62978	Tee - Gauge Port - 7/8-14 (#10) MJIC x 7/8-14 (#10) FJIC x 7/16-20 (#4) FORB	1
16	N64584	Tee - Gauge Port - 1 5/16-12 (#16)MJIC X 1 5/16-12 (#16)FJIC x 7/16-20 (#4)FORB	1
17	N19336	Tee - Swivel - (1) 1 5/16-12 FJIC x (2) 1 5/16-12 MJIC	5
18	C-4403	Tee - (2) 9/16-18 MJIC x (1) 9/16-18 FJIC	1
19	* * * * *		
20	N29365	Plug - 9/16-18 MORB	4
21	N34577	Tag - Hose ID Tank - Fan/Auger - RETURN	2
22	N34576	Tag - Hose ID - Tank - Fan/Auger - PRESSURE	2
23	N34578	Tag - Hose ID - Tank - Fan/Auger - CASE DRAIN	1
24	C14840	Connector - 3/4-16 MORB x 7/8-14 MJIC	2
24A	C15330	Connector - 3/4-16 MORB x 3/4-16 MJIC (10178)	1
24B	C-4469	Connector - 7/8-14 (#10) MJIC	4
25	K50834	3/8 Flat Face Tip - 3/4-16 FORB	1
26	N37914	3/4 Male Pioneer Tip - 1 1/16-12 FORB	4
27	N34498	1/2 Male Pioneer Tip - 7/8-14 FORB	7
28	N34488	1/2 Female Pioneer Coupler - 7/8-14 FORB	6
29	S37662	Tag - Hose ID - Wing Lift - UNFOLD	2
30	S37661	Tag - Hose ID - Wing Lift - FOLD	2
31	S37663	Tag - Hose ID - Depth Control - LOWER	2
32	S37664	Tag - Hose ID - Depth Control - RAISE	2
33	S44456	Tag - Hose ID - Case Drain	1
33A	N59870	Tag - Hose ID - Auxiliary Circuit	1
34	N34620	Connector - 7/8-14 FJIC x 7/8-14 MORB	4
35	H24393	90 Elbow - 7/8-14 MJIC	6
36	N37348	Oil Line - 5/8 x 84 Lg w/ 7/8-14 FJIC	4
37	C-4370	Oil Line - 5/8 x 128 Lg w/ 7/8-14 FJIC	4
38	N16608	Coupler Clamp - Female Pioneer	6
39	N19458	Spacer Bushing - 0.364 ID x 0.540 OD x 2	4
39A	N19155	Spacer Bushing - 0.385 ID x 0.625 OD x 1/2	2
40	S13337	Hex Bolt - 5/16 x 6 Lg	2
41	W-469	Hex Bolt - 1/4 x 3/4 Lg	6
41A	C15319	Hex Bolt - 1/4 x 2 1/2 Lg	3
42	W-521	Lockwasher - 1/4	9
43	W-512	Hex Nut - 1/4	9
44	W-522	Lockwasher - 5/16	2
45	W-513	Hex Nut - 5/16	2
46	N37403	Hyd Hose - 1/2 x 192 Lg - 7/8-14 MJIC x 7/8-14 MORB	2
47	C-4387	Hyd Hose - 1/2 x 36 Lg w/7/8-14 MJIC x 7/8-14 FJIC Swivel	4
48	D-4838	Tie Strap - 14 1/2 Lg	15
48A	D-4951	Tie Strap - 7 3/8 Lg	15
48B	S13336	Tie Strap - 24 Lg	3
49	C-4698	Nylon Oil Line Clamp (STD-4) (Tillage-24)	30

High Flow - 9800 Tow Between - Single Fan

Item	Part No.	Description	Qty
50	S-1299	Hex Bolt - 3/8 x 4 1/2 Lg	3
51	C-3664	Hex Bolt - 3/8 x 5 1/2 Lg	4
52	W-538	Flatwasher - 3/8	7
53	M-3388	Locknut - 3/8	7
54	F-4565	Hyd Hose - 1/2 x 60 Lg w/7/8-14 FJIC	1
55	S22403	Hyd Hose - 1/2 x 120 Lg - 7/8-14 FJIC	2
56	N36833	Oil Line - 1 x 94 Lg w/ 1 5/16-12 FJIC (#16)	4
57	N58170	Hyd Hose - 3/4 x 192 Lg - 1 5/16-12 MJIC (#16) x 7/8-14 MORB (#10)	2
58	N58168	Hyd Hose - 3/4 x 36 Lg - 1 5/16-12 MJIC Ends	2
59	N58169	Hyd Hose - 3/4 x 36 Lg - 1 5/16 -12 MJIC (#16) x 7/8 -14 MORB	2
60	N58171	90 Elbow - 1 5/16-12 MJIC x 1 5/16-12 FJIC Swivel	2
61	D-4808	Oil Line Clamp	8
62	S31476	Plate Spacer - 1 1/2 x 1 1/2 x 1/2 thick	4
63	N58670	Case Drain Header	1
64	C28505	Plug - 3/4-16 MORB	1
65	N34646	90 Elbow - 7/8-14 MJIC x 1 1/16-12 MORB	1
66	K-5806	90 Elbow - Swivel - 7/8-14 MJIC x 7/8-14 FJIC	2
67	N58616	90 Elbow - 1 5/16-12 MJIC (#16) x 1 5/16-12 FJIC (#16)	2
68	N58576	90 Elbow - 1 5/16-12 MJIC (#16) x 1 5/16-12 MORB (#16)	3
69	C26333	45 Elbow - 7/8-14 MJIC x 3/4-16 MORB	2
70	N49599	45 Elbow - 7/8-14 MJIC x 7/8-14 MORB	2
71	* * * * *		
72	**N58349**	**Valve - Solenoid - Hydraulic Assist Auger - 45 gpm**	**1**
73	N53696	Hyd Hose - 3/8 x 66 Lg w/9/16-18 FJIC	1
74	N37421	Hyd Hose - 3/8 x 108 - 3/4-16 FJIC x 9/16-18 FJIC w/90 Bend	1
75	* * * * *		
76	N69479	Hyd Hose - 3/8 x 290 Lg - 9/16-18 FJIC	1
77	C-4468	Hyd Hose - 1/2 x 24 Lg - 7/8-14 FJIC	1
78	C-4385	Hyd Hose - 1/2 x 24 Lg - 7/8-14 MJIC x 7/8-14 FJIC	1
79	C18779	Hyd Hose - 1/2 x 72 Lg - 7/8-14 FJIC	2
80	N58677	Hyd Hose - 3/4 x 14 Lg - 1 5/16-12 MJIC x 1 5/16-12 FJIC swivel	2
81	N69691	Hyd Hose - 3/4 x 18 Lg - 1 5/16-12 FJIC (#16) x 7/8-14 FJIC (#10)	1
82	* * * * *		
83	* * * * *		
84	N69239	Hyd Hose - 3/4 x 78 Lg - 1 5/16-12 FJIC (#16) x 1 5/16-12 MJIC (#16)	1
85	N69203	Hyd Hose - 3/4 x 208 Lg - 1 5/16-12 FJIC (#16) x 1 1/16-12 MORB (#12)	1
86	* * * * *		
87	N69204	Hyd Hose - 3/4 x 134 Lg - 1 5/16-12 FJIC (#16) x 1 1/16-12 MORB (#12)	2
88	* * * * *		
89	N69213	Hyd Hose - 3/4 x 62 Lg - 1 5/16-12 FJIC (#16) x 1 5/16-12 MJIC (#16)	2
90	N69214	Hyd Hose - 3/4 x 185 Lg - 1 5/16-12 FJIC (#16) x 1 1/16-12 MORB (#12)	1
91	N69217	Hyd Hose - 3/4 x 62 Lg - 1 5/16-12 FJIC (#16) x 7/8-14 FJIC (#10)	1
92	N69202	Mount Bracket	1
93	W-475	Hex Bolt - 3/8 x 1	3
94	N25457	U-Bolt - 3/8 x 4 x 8	3
95	W-523	Lock Washer 3/8	11
96	W-514	Hex Nut 3/8	8

Dual Flow Hydraulics - 12” Auger - Option
9800 Tow Between - Dual Fans

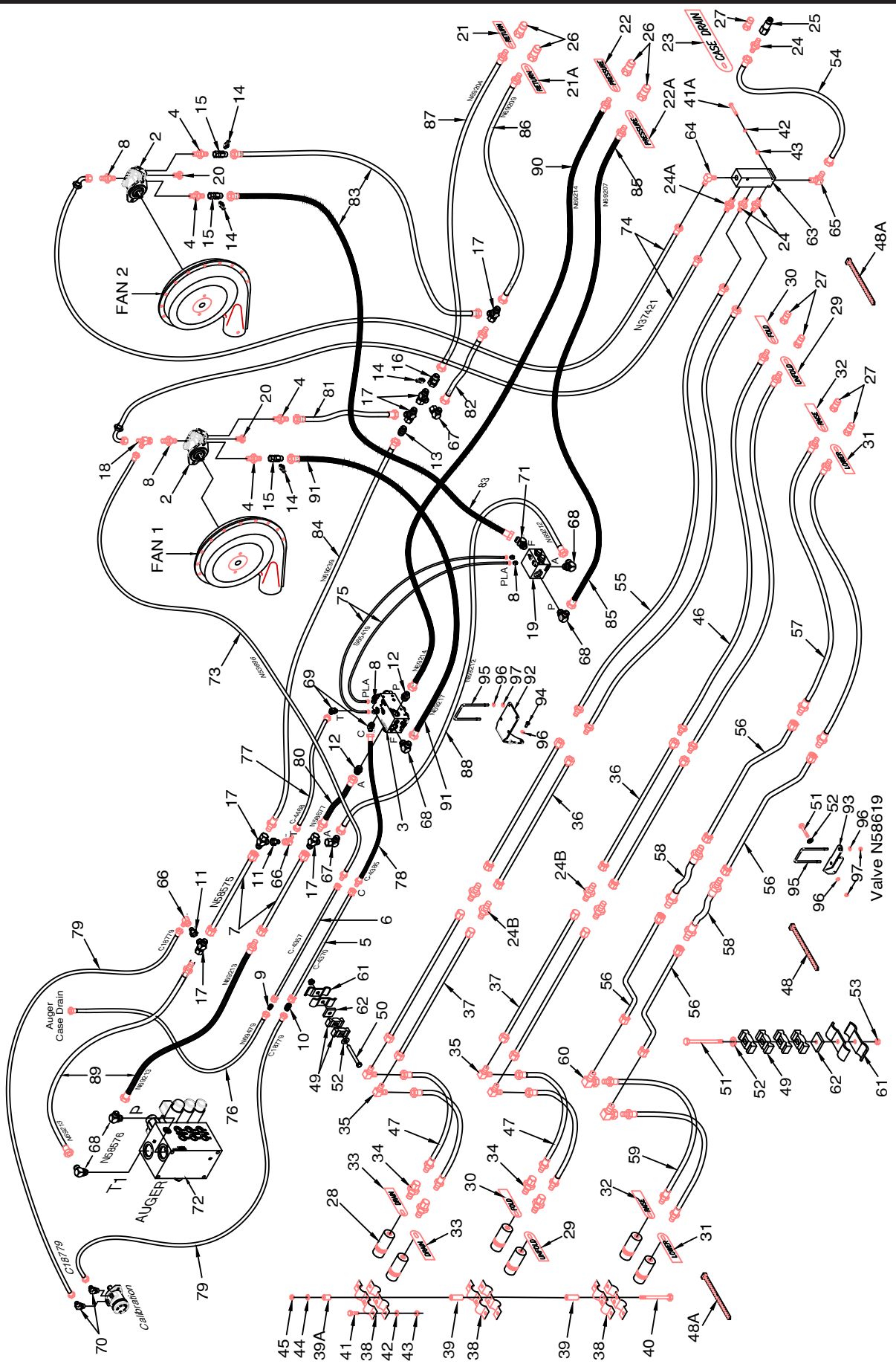

Dual Flow Hydraulic - 9800 Tow Between - Dual Fans			
Item	**Part No.**	**Description**	**Qty**
1	* * * * *	Fan - See Section 11	2
2	N53243	Hydraulic Motor W/ Internal Check Valve - Rexroth - See Section 11	2
3	**N58618**	**Selector Valve - Dual Flow Auger - Ground Drive**	**1**
4	N34505	Connector - 7/8-14 (#10) MJIC x 7/8-14 (#10) MORB	2
5	C-4370	Oil Line - 5/8 x 128 Lg w/ 7/8-14 FJIC	1
6	C-4357	Oil Line - 3/8 x 130 1/2 Lg w/ 9/16-18 FJIC	1
7	N58575	Oil Line - 1 x 96 Lg w/ 1 5/16-12 FJIC (#16)	2
8	N29358	Connector - 9/16-18 MJIC x 9/16-18 MORB	6
9	H18269	Connector - 9/16-18 MJIC	1
10	C-4469	Connector - 7/8-14 MJIC	1
11	N58642	Connector - 7/8-14 MJIC (#10) x 1 5/16-12 MJIC (#16)	2
12	N58621	Connector - 1 5/16-12 MJIC (#16) x 1 5/16-12 MORB (#16)	2
13	N16346	Connector - 1 5/16-12 MJIC	1
14	N64583	Coupler - Test Port - 7/16-20 (#4) MORB	4
15	K62978	Tee - Gauge Port - 7/8-14 (#10) MJIC x 7/8-14 (#10) FJIC x 7/16-20 (#4) FORB	3
16	N64584	Tee - Gauge Port - 1 5/16-12 (#16)MJIC X 1 5/16-12 (#16)FJIC x 7/16-20 (#4)FORB	1
17	N19336	Tee - Swivel - (1) 1 5/16-12 FJIC (#16) x (2) 1 5/16-12 MJIC (#16)	6
18	C-4403	Tee - (2) 9/16-18 MJIC x (1) 9/16-18 FJIC	1
19	N58619	Diverter Valve - Dual Flow Auger	1
20	N29365	Plug - 9/16-18 MORB	2
21	N34577	Tag - Hose ID Tank - Fan/Auger - RETURN	1
21A	N58341	Tag - Hose ID - Air Tank - Fan 2 - RETURN	1
22	N34576	Tag - Hose ID - Tank - Fan/Auger - PRESSURE	1
22A	N58340	Tag - Hose ID - Air Tank - Fan 2 - PRESSURE	1
23	N34578	Tag - Hose ID - Tank - Fan/Auger - CASE DRAIN	1
24	C14840	Connector - 3/4-16 MORB x 7/8-14 MJIC	2
24A	C15330	Connector - 3/4-16 MORB x 3/4-16 MJIC (10178)	1
24B	C-4469	Connector - 7/8-14 (#10) MJIC	4
25	K50834	3/8 Flat Face Tip - 3/4-16 FORB	1
26	N37914	3/4 Male Pioneer Tip - 1 1/16-12 FORB	4
27	N34498	1/2 Male Pioneer Tip - 7/8-14 FORB	7
28	N34488	1/2 Female Pioneer Coupler - 7/8-14 FORB	6
29	S37662	Tag - Hose ID - Wing Lift - UNFOLD	2
30	S37661	Tag - Hose ID - Wing Lift - FOLD	2
31	S37663	Tag - Hose ID - Depth Control - LOWER	2
32	S37664	Tag - Hose ID - Depth Control - RAISE	2
33	S44456	Tag - Hose ID - Case Drain	1
33A	N59870	Tag - Hose ID - Auxiliary Circuit	1
34	N34620	Connector - 7/8-14 FJIC x 7/8-14 MORB	4
35	H24393	90 Elbow - 7/8-14 MJIC	6
36	N37348	Oil Line - 5/8 x 84 Lg w/ 7/8-14 FJIC	4
37	C-4370	Oil Line - 5/8 x 128 Lg w/ 7/8-14 FJIC	4
38	N16608	Coupler Clamp - Female Pioneer	6
39	N19458	Spacer Bushing - 0.364 ID x 0.540 OD x 2	4
39A	N19155	Spacer Bushing - 0.385 ID x 0.625 OD x 1/2	2
40	S13337	Hex Bolt - 5/16 x 6 Lg	2
41	W-469	Hex Bolt - 1/4 x 3/4 Lg	6
41A	C15319	Hex Bolt - 1/4 x 2 1/2 Lg	3
42	W-521	Lockwasher - 1/4	9
43	W-512	Hex Nut - 1/4	9
44	W-522	Lockwasher - 5/16	2
45	W-513	Hex Nut - 5/16	2
46	N37403	Hyd Hose - 1/2 x 192 Lg - 7/8-14 MJIC x 7/8-14 MORB	2
47	C-4387	Hyd Hose - 1/2 x 36 Lg w/7/8-14 MJIC x 7/8-14 FJIC Swivel	4
48	D-4838	Tie Strap - 14 1/2 Lg	15
48A	D-4951	Tie Strap - 7 3/8 Lg	15

Dual Flow Hydraulic - 9800 Tow Between - Dual Fans

Item	Part No.	Description	Qty
48B	S13336	Tie Strap - 24 Lg	3
49	C-4698	Nylon Oil Line Clamp (STD-4) (Tillage-24)	30
50	S-1299	Hex Bolt - 3/8 x 4 1/2 Lg	3
51	C-3664	Hex Bolt - 3/8 x 5 1/2 Lg	6
52	W-538	Flatwasher - 3/8	7
53	M-3388	Locknut - 3/8	7
54	F-4565	Hyd Hose - 1/2 x 60 Lg w/7/8-14 FJIC (#10)	1
55	S22403	Hyd Hose - 1/2 x 120 Lg - 7/8-14 FJIC (#10)	2
56	N36833	Oil Line - 1 x 94 Lg w/ 1 5/16-12 FJIC (#16)	4
57	N58170	Hyd Hose - 3/4 x 192 Lg - 1 5/16-12 MJIC (#16) x 7/8-14 MORB (#10)	2
58	N58168	Hyd Hose - 3/4 x 36 Lg - 1 5/16-12 MJIC (#16) Ends	2
59	N58169	Hyd Hose - 3/4 x 36 Lg - 1 5/16 -12 MJIC (#16) x 7/8 -14 MORB (#10)	2
60	N58171	90 Elbow - 1 5/16-12 MJIC (#16) x 1 5/16-12 FJIC (#16) Swivel	2
61	D-4808	Oil Line Clamp	8
62	S31476	Plate Spacer - 1 1/2 x 1 1/2 x 1/2 thick	4
63	N58670	Case Drain Header	1
64	C15317	90 Elbow - 3/4-16 MJIC x 3/4-16 MORB	1
65	N34646	90 Elbow - 7/8-14 MJIC x 1 1/16-12 MORB	1
66	K-5806	90 Elbow - Swivel - 7/8-14 MJIC x 7/8-14 FJIC	2
67	N58616	90 Elbow - 1 5/16-12 MJIC (#16) x 1 5/16-12 FJIC (#16)	2
68	N58576	90 Elbow - 1 5/16-12 MJIC (#16) x 1 5/16-12 MORB (#16)	5
69	C26333	45 Elbow - 7/8-14 MJIC x 3/4-16 MORB	2
70	N49599	45 Elbow - 7/8-14 MJIC x 7/8-14 MORB	2
71	N58577	45 Elbow - 1 5/16-12 (#16) MJIC x 1 5/16-12 (#16) MORB	1
72	**N58349**	**Valve - Solenoid - Hydraulic Assist Auger - 45 gpm**	**1**
73	N53696	Hyd Hose - 3/8 x 66 Lg w/9/16-18 FJIC	1
74	N37421	Hyd Hose - 3/8 x 108 - 3/4-16 FJIC x 9/16-18 FJIC w/90 Bend	2
75	S65419	Hyd Hose - 3/8 x 120 Lg - 9/16-18 FJIC (#6) Ends	2
76	N69479	Hyd Hose - 3/8 x 290 Lg - 9/16-18 FJIC (#6)	1
77	C-4468	Hyd Hose - 1/2 x 24 Lg - 7/8-14 FJIC (#10)	1
78	C-4385	Hyd Hose - 1/2 x 24 Lg - 7/8-14 MJIC (#10) x 7/8-14 FJIC (#10)	1
79	C18779	Hyd Hose - 1/2 x 72 Lg - 7/8-14 FJIC (#10)	2
80	N58677	Hyd Hose - 3/4 x 14 Lg - 1 5/16-12 MJIC (#16) x 1 5/16-12 FJIC (#16) swivel	2
81	N69691	Hyd Hose - 3/4 x 18 Lg - 1 5/16-12 FJIC (#16) x 7/8-14 FJIC (#10)	1
82	N58681	Hyd Hose - 3/4 x 24 Lg - 1 5/16-12 FJIC (#16) swivel ends	1
83	N69208	Hyd Hose - 3/4 x 32 Lg - 1 5/16-12 FJIC (#16) x 7/8-14 FJIC (#10)	2
84	N69239	Hyd Hose - 3/4 x 78 Lg - 1 5/16-12 FJIC (#16) x 1 5/16-12 MJIC (#16)	1
85	N69207	Hyd Hose - 3/4 x 95 Lg - 1 5/16-12 FJIC (#16) x 1 1/16-12 MORB (#12)	1
86	N69209	Hyd Hose - 3/4 x 106 Lg - 1 5/16-12 FJIC (#16) x 1 1/16-12 MORB (#12)	1
87	N69204	Hyd Hose - 3/4 x 134 Lg - 1 5/16-12 FJIC (#16) x 1 1/16-12 MORB (#12)	1
88	N69212	Hyd Hose - 3/4 x 120 Lg - 1 5/16-12 FJIC (#16)	1
89	N69213	Hyd Hose - 3/4 x 62 Lg - 1 5/16-12 FJIC (#16) x 1 5/16-12 MJIC (#16)	2
90	N69214	Hyd Hose - 3/4 x 185 Lg - 1 5/16-12 FJIC (#16) x 1 1/16-12 MORB (#12)	1
91	N69217	Hyd Hose - 3/4 x 62 Lg - 1 5/16-12 FJIC (#16) x 7/8-14 FJIC (#10)	1
92	N69202	Mount Bracket	1
93	N58643	Mount Bracket	1
94	W-475	Hex Bolt - 3/8 x 1	3
95	N25457	U-Bolt - 3/8 x 4 x 8	3
96	W-523	Lock Washer 3/8	11
97	W-514	Hex Nut 3/8	8

Dual Flow Hydraulics - Conveyor - Option
9800 and 91000 Tow Behind - Single Fan

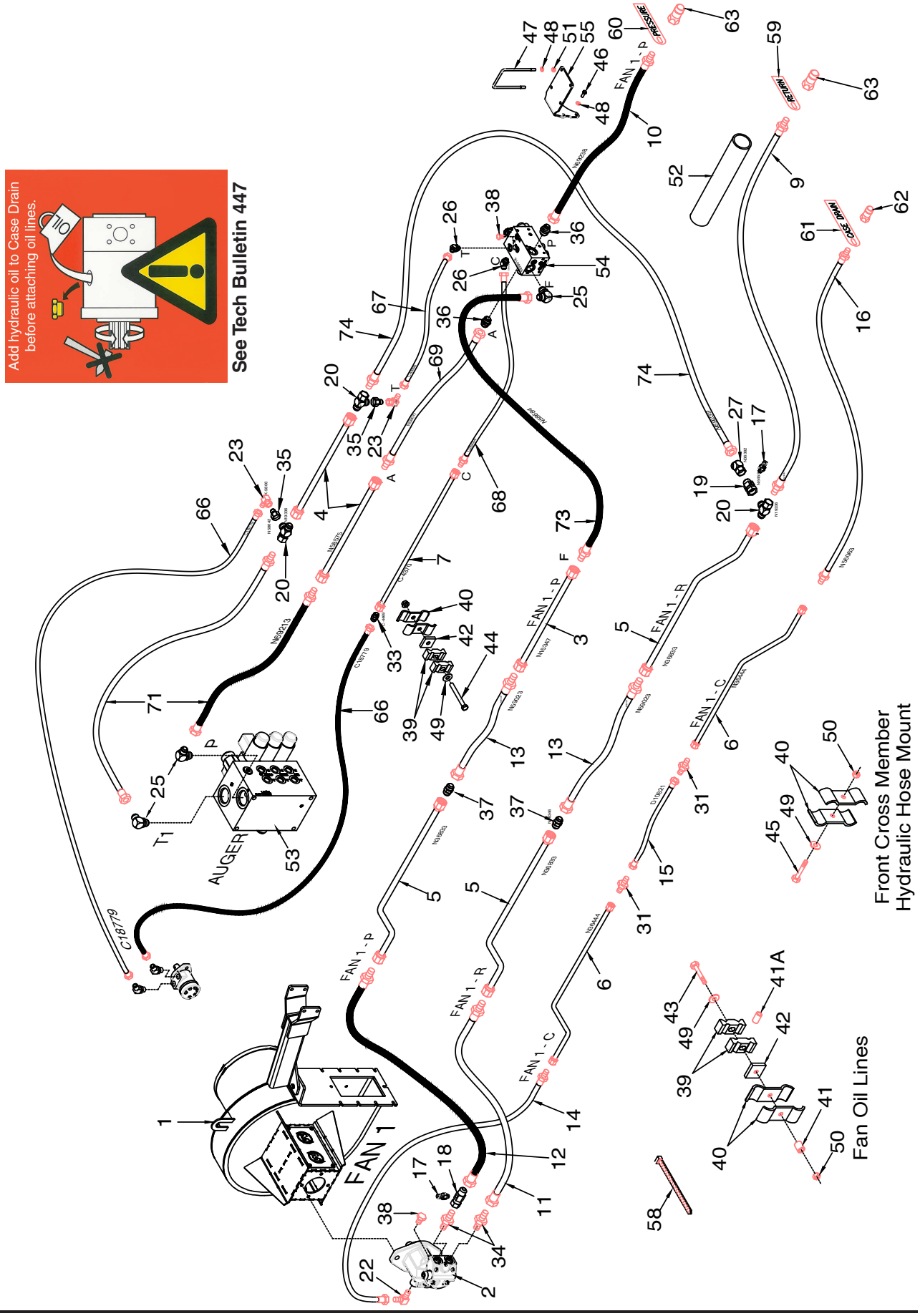

Converyor Hydraulic - 9800 and 91000 Tow Behind - Single Fan			
Item	**Part No.**	**Description**	**Qty**
Cart System			
1	* * * * *	Fan - See Section 11	1
2	N53243	Hydraulic Motor W/ Internal Check Valve - Rexroth - See Section 11	1
3	N16347	Oil Line - 1 x 72 Lg -1 5/16-12 FJIC (#16)	1
4	N58575	Oil Line - 1 x 96 Lg - 1 5/16-12 FJIC (#16)	2
5	N36833	Oil Line - 1 x 94 Lg - 6 Offset Bend x 1 5/16-12 FJIC (#16)	3
6	N36444	Oil Line - 1/2 x 94 Lg - 6 Offset Bend x 3/4-16 FJIC	2
7	C-4370	Oil Line - 5/8 x 128 Lg - 7/8-14 FJIC	1
8	* * * * *		
9	N56061	Hyd Hose - 3/4 x 330 Lg - 1 5/16-12 MJIC (#16) x 1 1/16-12 MORB (#12)	1
10	N69238	Hyd Hose - 3/4 x 330 Lg - 1 5/16-12 FJIC (#16) x 1 1/16-12 MORB (#12)	1
11	N53493	Hyd Hose - 3/4 x 48 Lg - 1 5/16-12 MJIC x 7/8-14 FJIC - (Fan 1)	1
12	N53495	Hyd Hose - 3/4 x 54 Lg - 1 5/16-12 MJIC x 7/8-14 FJIC - (Fan 1)	1
13	N59023	Hyd Hose - 3/4 x 48 Lg - 1 5/16-12 MJIC x 1 5/16-12 FJIC swivel	2
14	N19475	Hyd Hose - 3/8 x 48 Lg - 9/16-18 FJIC x 3/4-16 MJIC - (Fan 1)	1
15	D10821	Hyd Hose - 3/8 x 38 Lg - 3/4-16 FJIC	1
16	N56063	Hyd Hose - 3/8 x 330 Lg - 3/4-16 MJIC x 7/8-14 MORB	1
17	N64583	Coupler - Test Port - 7/16-20 (#4) MORB	2
18	K62978	Tee - Gauge Port - 7/8-14 (#10) MJIC x 7/8-14 (#10) FJIC x 7/16-20 (#4) FORB	1
19	N64584	Tee - Gauge Port - 1 5/16-12 (#16) MJIC X 1 5/16-12 (#16) FJIC x 7/16-20 (#4) FORB	1
20	N19336	Tee - Swivel - (1) 1 5/16-12 FJIC x (2) 1 5/16-12 MJIC	3
21	* * * * *		
22	N16143	90 Elbow - Swivel - 9/16-18 MJIC x 9/16-18 MORB	1
23	K-5806	90 Elbow - Swivel - 7/8-14 MJIC x 7/8-14 FJIC	2
24	* * * * *		
25	N58576	90 Elbow - 1 5/16-12 MJIC (#16) x 1 5/16-12 MORB (#16)	3
26	C26333	45 Elbow - 7/8-14 (#10) MJIC x 3/4-16 (#08) MORB	2
27	N36382	45 Elbow - Swivel - 1 5/16-12 FJIC (#16) x 1 5/16-12 MJIC (#16)	1
28	* * * * *		
29	* * * * *		
30	* * * * *		
31	N25754	Connector - 3/4-16 MJIC	2
32	* * * * *		
33	C-4469	Connector - 7/8-14 MJIC (#10)	1
34	N34505	Connector - 7/8-14 (#10) MJIC x 7/8-14 (#10) MORB	2
35	N58642	Connector - 7/8-14 MJIC (#10) x 1 5/16-12 MJIC (#16)	2
36	N58621	Connector - 1 5/16-12 MJIC (#16) x 1 5/16-12 MORB (#16)	2
37	N16346	Connector - 1 5/16-12 MJIC (#16)	2
38	N29365	Plug - 9/16-18 MORB	3
39	C-4698	Nylon Oil Line Clamp	12
40	D-4808	Oil Line Clamp	14
41	N16257	Oil Line Spacer - 3/8 ID x 5/8 OD x 5/8 Lg	4
41A	N21632	Oil Line Spacer - 3/8 ID x 9/16 OD x 3/4 Lg	4
42	S31476	Plate Spacer - 1/2	6
43	C-1550	Hex Bolt - 3/8 x 4 Lg	4
44	S-1299	Hex Bolt - 3/8 x 4 1/2 Lg	2
45	W-477	Hex Bolt - 3/8 x 1 1/2 Lg	1
46	W-475	Hex Bolt - 3/8 x 1	3
47	N25457	U-Bolt - 3/8 x 4 x 8	2
48	W-523	Lock Washer 3/8	7
49	W-538	Flatwasher - 3/8	7
50	M-3388	Locknut - 3/8	8
51	W-514	Hex Nut 3/8	4
52	N62246	Hydraulic Hose Sleeve - 3” Dia x 36” Lg	1
53	**N58349**	**Auger - Valve - Solenoid - Hydraulic Assist Auger - 45 gpm**	**1**
54	**N58618**	**Selector Valve - Dual Flow Auger - Ground Drive**	**1**
55	N69202	Mount Bracket	1
56	* * * * *		
57	* * * * *		
58	D-4838	Tie Strap - 14 1/2 Lg	16
	D-4951	Tie Strap - 7 3/8 Lg	9

Converyor Hydraulic - 9800 and 91000 Tow Behind - Single Fan

Item	Part No.	Description	Qty
59	N34577	Tag - Hose ID Tank - Fan/Auger - RETURN	1
60	N34576	Tag - Hose ID - Tank - Fan/Auger - PRESSURE	1
61	N34578	Tag - Hose ID - Tank - Fan/Auger - CASE DRAIN	1
62	N34498	1/2 Male Pioneer Tip - 7/8-14 FORB (Cart - 1)	1
63	N37914	3/4 Male Pioneer Tip - 1 1/16-12 FORB (Cart - 2)	2
64	* * * * *		
65	* * * * *		
66	C18779	Hyd Hose - 1/2 x 72 Lg w/7/8-14 FJIC	2
67	C-4468	Hyd Hose - 1/2 x 24 Lg w/7/8-14 FJIC	1
68	C26444	Hyd Hose - 1/2 x 16 Lg w/7/8-14 MJIC x 7/8-14 FJIC	1
69	N58677	Hyd Hose - 3/4 x 14 Lg - 1 5/16-12 MJIC x 1 5/16-12 FJIC swivel	1
70	* * * * *		
71	N69213	Hyd Hose - 3/4 x 62 Lg - 1 5/16-12 FJIC (#16) x 1 5/16-12 MJIC (#16)	2
72	* * * * *		
73	N58684	Hyd Hose - 3/4 x 72 Lg - 1 5/16-12 MJIC x 1 5/16-12 FJIC swivel end	1
74	N69239	Hyd Hose - 3/4 x 78 Lg - 1 5/16-12 FJIC (#16) x 1 5/16-12 MJIC (#16)	1
	N19023	Decal - Danger “HOT” (Not Shown)	1
	N36263	Decal - Warning “BURN HAZARD” (Not Shown)	1
	N36443	Decal - Auger “LEVER POSITION” (Not Shown)	1
	N71602	Decal - “AUGER / FAN / “CALIBRAITON” (Not Shown)	1

Dual Flow Hydraulics - Conveyor - Option
9800 and 91000 Tow Behind - Dual Fan

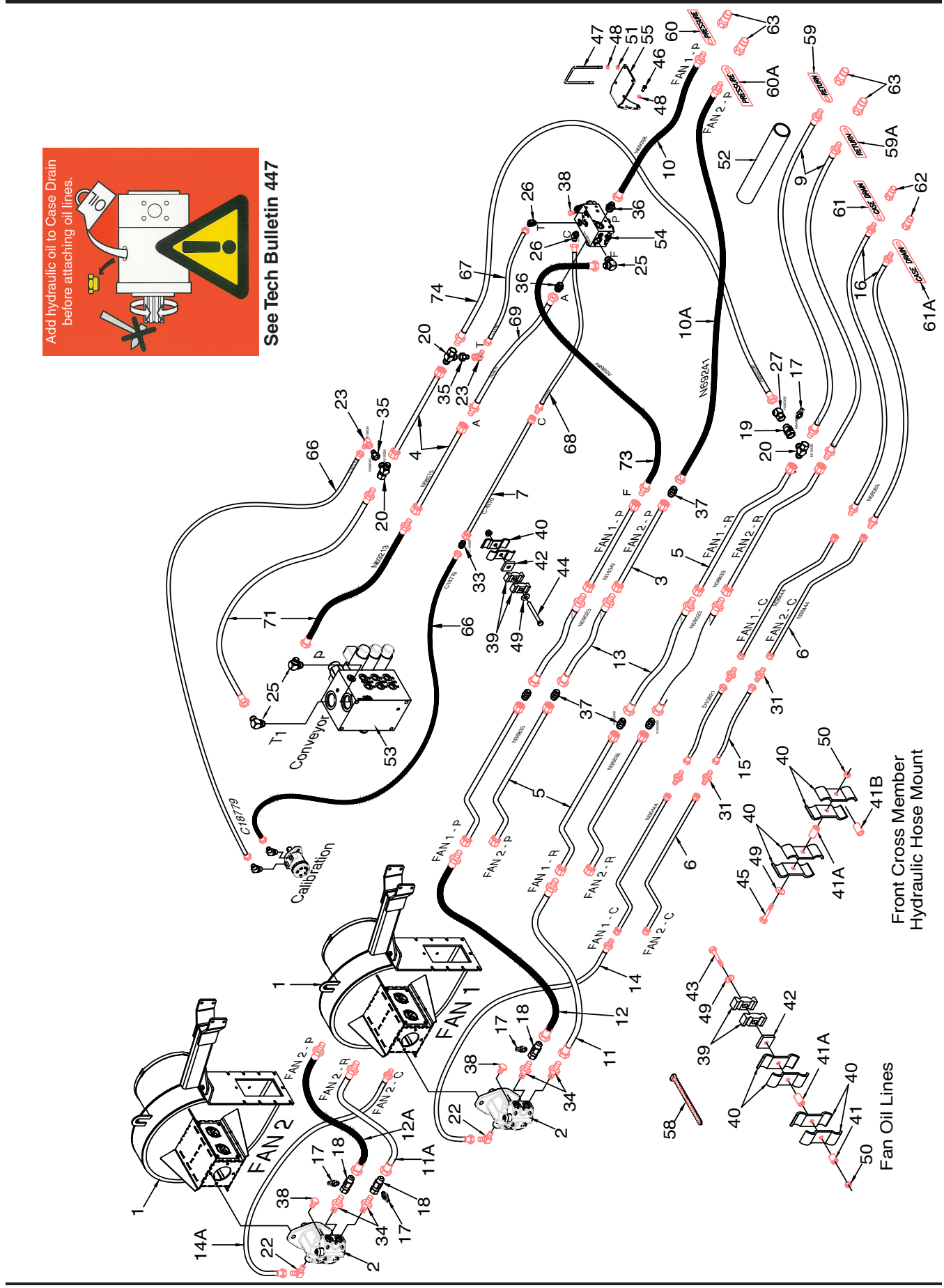

Converyor Hydraulic - 9800 and 91000 Tow Behind - Dual Fan

Item	Part No.	Description	Qty
Cart System			
1	* * * * *	Fan - See Section 11	2
2	N53243	Hydraulic Motor W/ Internal Check Valve - Rexroth - See Section 11	2
3	N16347	Oil Line - 1 x 72 Lg -1 5/16-12 FJIC (#16)	2
4	N58575	Oil Line - 1 x 96 Lg - 1 5/16-12 FJIC (#16)	2
5	N36833	Oil Line - 1 x 94 Lg - 6 Offset Bend x 1 5/16-12 FJIC (#16)	6
6	N36444	Oil Line - 1/2 x 94 Lg - 6 Offset Bend x 3/4-16 FJIC	4
7	C-4370	Oil Line - 5/8 x 128 Lg - 7/8-14 FJIC	1
8	* * * * *		
9	N56061	Hyd Hose - 3/4 x 330 Lg - 1 5/16-12 MJIC (#16) x 1 1/16-12 MORB (#12)	2
10	N69238	Hyd Hose - 3/4 x 330 Lg - 1 5/16-12 FJIC (#16) x 1 1/16-12 MORB (#12)	1
10A	N69241	Hyd Hose - 3/4 x 354 Lg - 1 5/16-12 FJIC (#16) x 1 1/16-12 MORB (#12)	1
11	N53493	Hyd Hose - 3/4 x 48 Lg - 1 5/16-12 MJIC x 7/8-14 FJIC - (Fan 1)	1
11A	N53247	Hyd Hose - 3/4 x 72 Lg - 1 5/16-12 MJIC x 7/8-14 FJIC - (Fan 2)	1
12	N53495	Hyd Hose - 3/4 x 54 Lg - 1 5/16-12 MJIC x 7/8-14 FJIC - (Fan 1)	1
12A	N53249	Hyd Hose - 3/4 x 78 Lg - 1 5/16-12 MJIC x 7/8-14 FJIC - (Fan 2)	1
13	N59023	Hyd Hose - 3/4 x 48 Lg - 1 5/16-12 MJIC x 1 5/16-12 FJIC swivel	4
14	N19475	Hyd Hose - 3/8 x 48 Lg - 9/16-18 FJIC x 3/4-16 MJIC - (Fan 1)	1
14A	N53492	Hyd Hose - 3/8 x 72 Lg - 9/16-18 FJIC x 3/4-16 MJIC - (Fan 2)	1
15	D10821	Hyd Hose - 3/8 x 38 Lg - 3/4-16 FJIC	2
16	N56063	Hyd Hose - 3/8 x 330 Lg - 3/4-16 MJIC x 7/8-14 MORB	2
17	N64583	Coupler - Test Port - 7/16-20 (#4) MORB	4
18	K62978	Tee - Gauge Port - 7/8-14 (#10) MJIC x 7/8-14 (#10) FJIC x 7/16-20 (#4) FORB	3
19	N64584	Tee - Gauge Port - 1 5/16-12 (#16) MJIC X 1 5/16-12 (#16) FJIC x 7/16-20 (#4) FORB	1
20	N19336	Tee - Swivel - (1) 1 5/16-12 FJIC x (2) 1 5/16-12 MJIC	3
21	* * * * *		
22	N16143	90 Elbow - Swivel - 9/16-18 MJIC x 9/16-18 MORB	1
23	K-5806	90 Elbow - Swivel - 7/8-14 MJIC x 7/8-14 FJIC	2
24	* * * * *		
25	N58576	90 Elbow - 1 5/16-12 MJIC (#16) x 1 5/16-12 MORB (#16)	3
26	C26333	45 Elbow - 7/8-14 (#10) MJIC x 3/4-16 (#08) MORB	2
27	N36382	45 Elbow - Swivel - 1 5/16-12 FJIC (#16) x 1 5/16-12 MJIC (#16)	1
28	* * * * *		
29	* * * * *		
30	* * * * *		
31	N25754	Connector - 3/4-16 MJIC	4
32	* * * * *		
33	C-4469	Connector - 7/8-14 MJIC (#10)	1
34	N34505	Connector - 7/8-14 (#10) MJIC x 7/8-14 (#10) MORB	4
35	N58642	Connector - 7/8-14 MJIC (#10) x 1 5/16-12 MJIC (#16)	2
36	N58621	Connector - 1 5/16-12 MJIC (#16) x 1 5/16-12 MORB (#16)	2
37	N16346	Connector - 1 5/16-12 MJIC (#16)	5
38	N29365	Plug - 9/16-18 MORB	4
39	C-4698	Nylon Oil Line Clamp	12
40	D-4808	Oil Line Clamp	24
41	N16257	Oil Line Spacer - 3/8 ID x 5/8 OD x 5/8 Lg	4
41A	N15559	Oil Line Spacer - 3/8 ID x 5/8 OD x 1 Lg	5
41B	D-5011	Oil Line Spacer - 21/32 ID x 1 OD x 1 9/16 Lg	1
42	S31476	Plate Spacer - 1/2	6
43	C-3664	Hex Bolt - 3/8 x 5 1/2 Lg	4
44	S-1299	Hex Bolt - 3/8 x 4 1/2 Lg	2
45	D-5249	Hex Bolt - 3/8 x 3 1/4 Lg	1
46	W-475	Hex Bolt - 3/8 x 1	3
47	N25457	U-Bolt - 3/8 x 4 x 8	2
48	W-523	Lock Washer 3/8	9
49	W-538	Flatwasher - 3/8	9
50	M-3388	Locknut - 3/8	8
51	W-514	Hex Nut 3/8	4
52	N62246	Hydraulic Hose Sleeve - 3” Dia x 36” Lg	1
53	**N58349**	**Auger - Valve - Solenoid - Hydraulic Assist Auger - 45 gpm**	**1**
54	**N58618**	**Selector Valve - Dual Flow Auger - Ground Drive**	**1**
55	N69202	Mount Bracket	1
56	* * * * *		
57	* * * * *		

Converyor Hydraulic - 9800 and 91000 Tow Behind - Dual Fan

Item	Part No.	Description	Qty
58	D-4838	Tie Strap - 14 1/2 Lg	16
	D-4951	Tie Strap - 7 3/8 Lg	9
59	N34577	Tag - Hose ID Tank - Fan/Auger - RETURN	1
59A	N58341	Tag - Hose ID - Air Tank - Fan 2 - RETURN	1
60	N34576	Tag - Hose ID - Tank - Fan/Auger - PRESSURE	1
60A	N58340	Tag - Hose ID - Air Tank - Fan 2 - PRESSURE	1
61	N34578	Tag - Hose ID - Tank - Fan/Auger - CASE DRAIN	1
61A	N58342	Tag - Hose ID - Tank - Fan 2 - CASE DRAIN	1
62	N34498	1/2 Male Pioneer Tip - 7/8-14 FORB	2
63	N37914	3/4 Male Pioneer Tip - 1 1/16-12 FORB	4
64	* * * * *		
65	* * * * *		
66	C18779	Hyd Hose - 1/2 x 72 Lg w/7/8-14 FJIC	2
67	C-4468	Hyd Hose - 1/2 x 24 Lg w/7/8-14 FJIC	1
68	C26444	Hyd Hose - 1/2 x 16 Lg w/7/8-14 MJIC x 7/8-14 FJIC	1
69	N58677	Hyd Hose - 3/4 x 14 Lg - 1 5/16-12 MJIC x 1 5/16-12 FJIC swivel	1
70	* * * * *		
71	N69213	Hyd Hose - 3/4 x 62 Lg - 1 5/16-12 FJIC (#16) x 1 5/16-12 MJIC (#16)	2
72	* * * * *		
73	N58684	Hyd Hose - 3/4 x 72 Lg - 1 5/16-12 MJIC x 1 5/16-12 FJIC swivel end	1
74	N69239	Hyd Hose - 3/4 x 78 Lg - 1 5/16-12 FJIC (#16) x 1 5/16-12 MJIC (#16)	1
	N19023	Decal - Danger “HOT” (Not Shown)	1
	N36263	Decal - Warning “BURN HAZARD” (Not Shown)	1
	N36443	Decal - Auger “LEVER POSITION” (Not Shown)	1
	N71602	Decal - “AUGER / FAN / “CALIBRAITON” (Not Shown)	1

Dual Flow Hydraulics - Conveyor - Option
9800 Tow Between - Single Fan

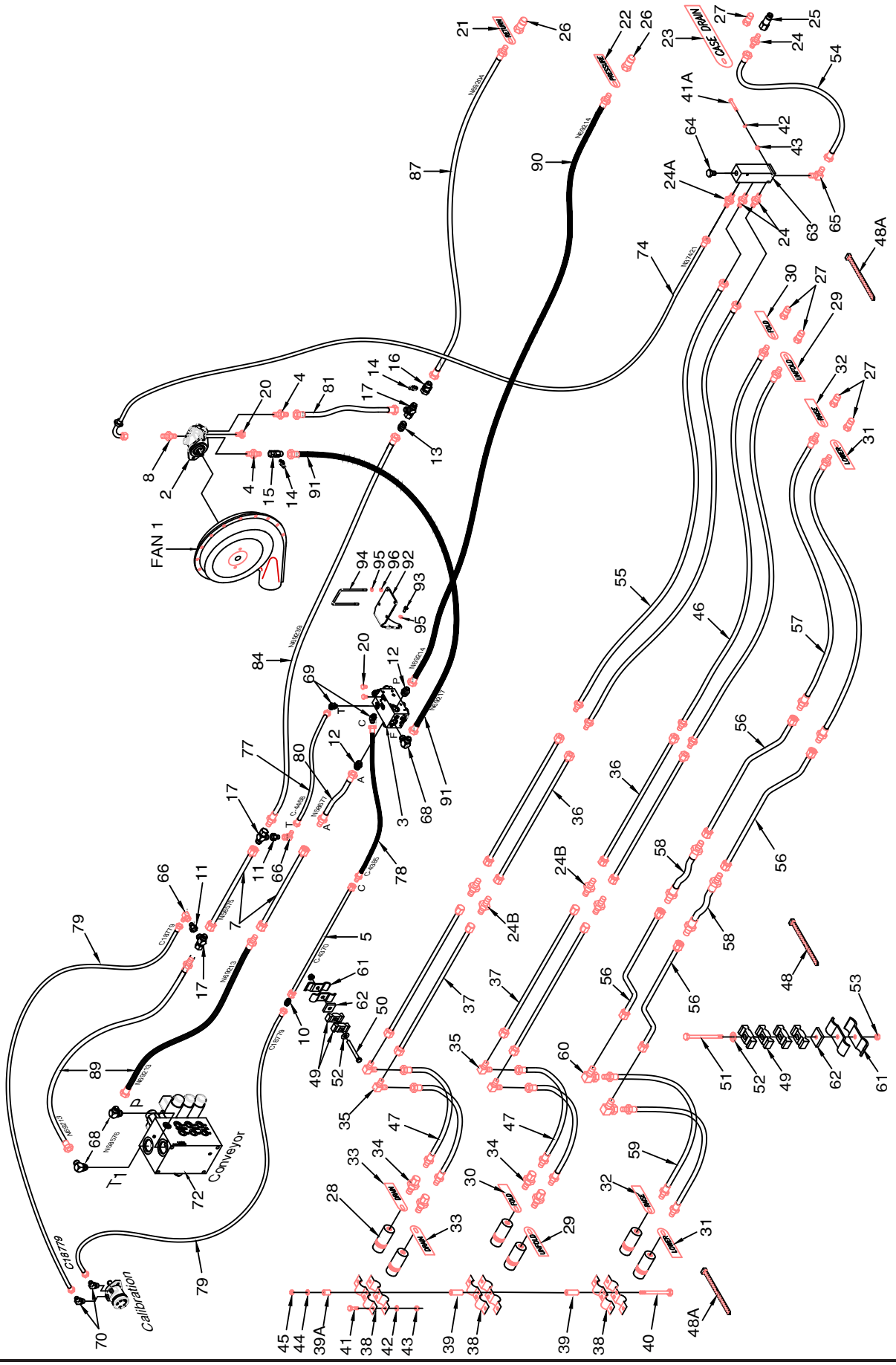

High Flow - 9800 Tow Between - Single Fan

Item	Part No.	Description	Qty
1	* * * * *	Fan - See Section 11	1
2	N53243	Hydraulic Motor W/ Internal Check Valve - Rexroth - See Section 11	1
3	**N58618**	**Selector Valve - Dual Flow Auger - Ground Drive**	**1**
4	N34505	Connector - 7/8-14 (#10) MJIC x 7/8-14 (#10) MORB	2
5	C-4370	Oil Line - 5/8 x 128 Lg w/ 7/8-14 FJIC	1
6			
7	N58575	Oil Line - 1 x 96 Lg w/ 1 5/16-12 FJIC	2
8	N29358	Connector - 9/16-18 MJIC x 9/16-18 MORB	1
9			
10	C-4469	Connector - 7/8-14 MJIC	1
11	N58642	Connector - 7/8-14 MJIC (#10) x 1 5/16-12 MJIC (#16)	2
12	N58621	Connector - 1 5/16-12 MJIC (#16) x 1 5/16-12 MORB (#16)	2
13	N16346	Connector - 1 5/16-12 MJIC	1
14	N64583	Coupler - Test Port - 7/16-20 (#4) MORB	2
15	K62978	Tee - Gauge Port - 7/8-14 (#10) MJIC x 7/8-14 (#10) FJIC x 7/16-20 (#4) FORB	1
16	N64584	Tee - Gauge Port - 1 5/16-12 (#16)MJIC X 1 5/16-12 (#16)FJIC x 7/16-20 (#4)FORB	1
17	N19336	Tee - Swivel - (1) 1 5/16-12 FJIC x (2) 1 5/16-12 MJIC	3
18			
19	* * * * *		
20	N29365	Plug - 9/16-18 MORB	4
21	N34577	Tag - Hose ID Tank - Fan/Auger - RETURN	1
22	N34576	Tag - Hose ID - Tank - Fan/Auger - PRESSURE	1
23	N34578	Tag - Hose ID - Tank - Fan/Auger - CASE DRAIN	1
24	C14840	Connector - 3/4-16 MORB x 7/8-14 MJIC	2
24A	C15330	Connector - 3/4-16 MORB x 3/4-16 MJIC (10178)	1
24B	C-4469	Connector - 7/8-14 (#10) MJIC	4
25	K50834	3/8 Flat Face Tip - 3/4-16 FORB	1
26	N37914	3/4 Male Pioneer Tip - 1 1/16-12 FORB	2
27	N34498	1/2 Male Pioneer Tip - 7/8-14 FORB	7
28	N34488	1/2 Female Pioneer Coupler - 7/8-14 FORB	6
29	S37662	Tag - Hose ID - Wing Lift - UNFOLD	2
30	S37661	Tag - Hose ID - Wing Lift - FOLD	2
31	S37663	Tag - Hose ID - Depth Control - LOWER	2
32	S37664	Tag - Hose ID - Depth Control - RAISE	2
33	S44456	Tag - Hose ID - Case Drain	1
33A	N59870	Tag - Hose ID - Auxiliary Circuit	1
34	N34620	Connector - 7/8-14 FJIC x 7/8-14 MORB	4
35	H24393	90 Elbow - 7/8-14 MJIC	6
36	N37348	Oil Line - 5/8 x 84 Lg w/ 7/8-14 FJIC	4
37	C-4370	Oil Line - 5/8 x 128 Lg w/ 7/8-14 FJIC	4
38	N16608	Coupler Clamp - Female Pioneer	6
39	N19458	Spacer Bushing - 0.364 ID x 0.540 OD x 2	4
39A	N19155	Spacer Bushing - 0.385 ID x 0.625 OD x 1/2	2
40	S13337	Hex Bolt - 5/16 x 6 Lg	2
41	W-469	Hex Bolt - 1/4 x 3/4 Lg	6
41A	C15319	Hex Bolt - 1/4 x 2 1/2 Lg	3
42	W-521	Lockwasher - 1/4	9
43	W-512	Hex Nut - 1/4	9
44	W-522	Lockwasher - 5/16	2
45	W-513	Hex Nut - 5/16	2
46	N37403	Hyd Hose - 1/2 x 192 Lg - 7/8-14 MJIC x 7/8-14 MORB	2
47	C-4387	Hyd Hose - 1/2 x 36 Lg w/7/8-14 MJIC x 7/8-14 FJIC Swivel	4
48	D-4838	Tie Strap - 14 1/2 Lg	15
48A	D-4951	Tie Strap - 7 3/8 Lg	15
48B	S13336	Tie Strap - 24 Lg	3
49	C-4698	Nylon Oil Line Clamp (STD-4) (Tillage-24)	30

Converyor Hydraulic - 9800 Tow Between - Single Fan			
Item	**Part No.**	**Description**	**Qty**
50	S-1299	Hex Bolt - 3/8 x 4 1/2 Lg	3
51	C-3664	Hex Bolt - 3/8 x 5 1/2 Lg	4
52	W-538	Flatwasher - 3/8	7
53	M-3388	Locknut - 3/8	7
54	F-4565	Hyd Hose - 1/2 x 60 Lg w/7/8-14 FJIC	1
55	S22403	Hyd Hose - 1/2 x 120 Lg - 7/8-14 FJIC	2
56	N36833	Oil Line - 1 x 94 Lg w/ 1 5/16-12 FJIC (#16)	4
57	N58170	Hyd Hose - 3/4 x 192 Lg - 1 5/16-12 MJIC (#16) x 7/8-14 MORB (#10)	2
58	N58168	Hyd Hose - 3/4 x 36 Lg - 1 5/16-12 MJIC Ends	2
59	N58169	Hyd Hose - 3/4 x 36 Lg - 1 5/16 -12 MJIC (#16) x 7/8 -14 MORB	2
60	N58171	90 Elbow - 1 5/16-12 MJIC x 1 5/16-12 FJIC Swivel	2
61	D-4808	Oil Line Clamp	8
62	S31476	Plate Spacer - 1 1/2 x 1 1/2 x 1/2 thick	4
63	N58670	Case Drain Header	1
64	C28505	Plug - 3/4-16 MORB	1
65	N34646	90 Elbow - 7/8-14 MJIC x 1 1/16-12 MORB	1
66	K-5806	90 Elbow - Swivel - 7/8-14 MJIC x 7/8-14 FJIC	2
67	* * * * *		
68	N58576	90 Elbow - 1 5/16-12 MJIC (#16) x 1 5/16-12 MORB (#16)	3
69	C26333	45 Elbow - 7/8-14 MJIC x 3/4-16 MORB	2
70	N49599	45 Elbow - 7/8-14 MJIC x 7/8-14 MORB	2
71	* * * * *		
72	**N58349**	**Valve - Solenoid - Hydraulic Assist Auger - 45 gpm**	**1**
73			
74	N37421	Hyd Hose - 3/8 x 108 - 3/4-16 FJIC x 9/16-18 FJIC w/90 Bend	1
75	* * * * *		
76			
77	C-4468	Hyd Hose - 1/2 x 24 Lg - 7/8-14 FJIC	1
78	C-4385	Hyd Hose - 1/2 x 24 Lg - 7/8-14 MJIC x 7/8-14 FJIC	1
79	C18779	Hyd Hose - 1/2 x 72 Lg - 7/8-14 FJIC	2
80	N58677	Hyd Hose - 3/4 x 14 Lg - 1 5/16-12 MJIC x 1 5/16-12 FJIC swivel	2
81	N69691	Hyd Hose - 3/4 x 18 Lg - 1 5/16-12 FJIC (#16) x 7/8-14 FJIC (#10)	1
82	* * * * *		
83	* * * * *		
84	N69239	Hyd Hose - 3/4 x 78 Lg - 1 5/16-12 FJIC (#16) x 1 5/16-12 MJIC (#16)	1
85	* * * * *		
86	* * * * *		
87	N69204	Hyd Hose - 3/4 x 134 Lg - 1 5/16-12 FJIC (#16) x 1 1/16-12 MORB (#12)	1
88	* * * * *		
89	N69213	Hyd Hose - 3/4 x 62 Lg - 1 5/16-12 FJIC (#16) x 1 5/16-12 MJIC (#16)	2
90	N69214	Hyd Hose - 3/4 x 185 Lg - 1 5/16-12 FJIC (#16) x 1 1/16-12 MORB (#12)	1
91	N69217	Hyd Hose - 3/4 x 62 Lg - 1 5/16-12 FJIC (#16) x 7/8-14 FJIC (#10)	1
92	N69202	Mount Bracket	1
93	W-475	Hex Bolt - 3/8 x 1	3
94	N25457	U-Bolt - 3/8 x 4 x 8	3
95	W-523	Lock Washer 3/8	11
96	W-514	Hex Nut 3/8	8

Dual Flow Hydraulics - Conveyor - Option
9800 Tow Between - Dual Fans

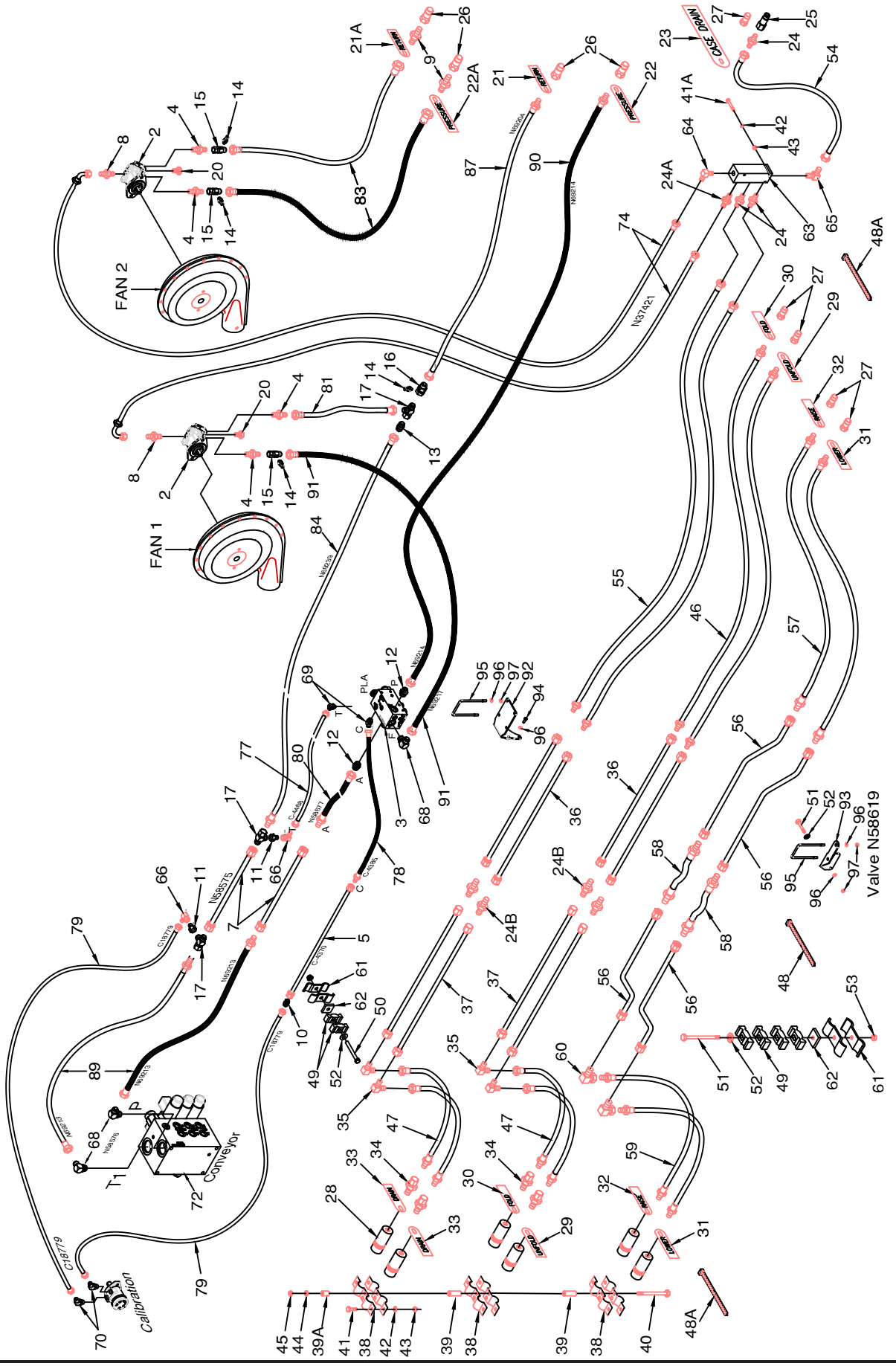

Converyor Hydraulic - 9800 Tow Between - Dual Fan			
Item	**Part No.**	**Description**	**Qty**
1	* * * * *	Fan - See Section 11	2
2	N53243	Hydraulic Motor W/ Internal Check Valve - Rexroth - See Section 11	2
3	**N58618**	**Selector Valve - Dual Flow Auger - Ground Drive**	**1**
4	N34505	Connector - 7/8-14 (#10) MJIC x 7/8-14 (#10) MORB	2
5	C-4370	Oil Line - 5/8 x 128 Lg w/ 7/8-14 FJIC	1
6	* * * * *		
7	N58575	Oil Line - 1 x 96 Lg w/ 1 5/16-12 FJIC (#16)	2
8	N29358	Connector - 9/16-18 MJIC x 9/16-18 MORB	2
9	N47903	Connector - 7/8-14 MJIC x 1 1/16-12 MORB	2
10	C-4469	Connector - 7/8-14 MJIC	1
11	N58642	Connector - 7/8-14 MJIC (#10) x 1 5/16-12 MJIC (#16)	2
12	N58621	Connector - 1 5/16-12 MJIC (#16) x 1 5/16-12 MORB (#16)	2
13	N16346	Connector - 1 5/16-12 MJIC	1
14	N64583	Coupler - Test Port - 7/16-20 (#4) MORB	4
15	K62978	Tee - Gauge Port - 7/8-14 (#10) MJIC x 7/8-14 (#10) FJIC x 7/16-20 (#4) FORB	3
16	N64584	Tee - Gauge Port - 1 5/16-12 (#16)MJIC X 1 5/16-12 (#16)FJIC x 7/16-20 (#4)FORB	1
17	N19336	Tee - Swivel - (1) 1 5/16-12 FJIC (#16) x (2) 1 5/16-12 MJIC (#16)	3
18	* * * * *		
19	* * * * *		
20	N29365	Plug - 9/16-18 MORB	2
21	N34577	Tag - Hose ID Tank - Fan/Auger - RETURN	1
21A	N58341	Tag - Hose ID - Air Tank - Fan 2 - RETURN	1
22	N34576	Tag - Hose ID - Tank - Fan/Auger - PRESSURE	1
22A	N58340	Tag - Hose ID - Air Tank - Fan 2 - PRESSURE	1
23	N34578	Tag - Hose ID - Tank - Fan/Auger - CASE DRAIN	1
24	C14840	Connector - 3/4-16 MORB x 7/8-14 MJIC	2
24A	C15330	Connector - 3/4-16 MORB x 3/4-16 MJIC (10178)	1
24B	C-4469	Connector - 7/8-14 (#10) MJIC	4
25	K50834	3/8 Flat Face Tip - 3/4-16 FORB	1
26	N37914	3/4 Male Pioneer Tip - 1 1/16-12 FORB	4
27	N34498	1/2 Male Pioneer Tip - 7/8-14 FORB	7
28	N34488	1/2 Female Pioneer Coupler - 7/8-14 FORB	6
29	S37662	Tag - Hose ID - Wing Lift - UNFOLD	2
30	S37661	Tag - Hose ID - Wing Lift - FOLD	2
31	S37663	Tag - Hose ID - Depth Control - LOWER	2
32	S37664	Tag - Hose ID - Depth Control - RAISE	2
33	S44456	Tag - Hose ID - Case Drain	1
33A	N59870	Tag - Hose ID - Auxiliary Circuit	1
34	N34620	Connector - 7/8-14 FJIC x 7/8-14 MORB	4
35	H24393	90 Elbow - 7/8-14 MJIC	6
36	N37348	Oil Line - 5/8 x 84 Lg w/ 7/8-14 FJIC	4
37	C-4370	Oil Line - 5/8 x 128 Lg w/ 7/8-14 FJIC	4
38	N16608	Coupler Clamp - Female Pioneer	6
39	N19458	Spacer Bushing - 0.364 ID x 0.540 OD x 2	4
39A	N19155	Spacer Bushing - 0.385 ID x 0.625 OD x 1/2	2
40	S13337	Hex Bolt - 5/16 x 6 Lg	2
41	W-469	Hex Bolt - 1/4 x 3/4 Lg	6
41A	C15319	Hex Bolt - 1/4 x 2 1/2 Lg	3
42	W-521	Lockwasher - 1/4	9
43	W-512	Hex Nut - 1/4	9
44	W-522	Lockwasher - 5/16	2
45	W-513	Hex Nut - 5/16	2
46	N37403	Hyd Hose - 1/2 x 192 Lg - 7/8-14 MJIC x 7/8-14 MORB	2
47	C-4387	Hyd Hose - 1/2 x 36 Lg w/7/8-14 MJIC x 7/8-14 FJIC Swivel	4
48	D-4838	Tie Strap - 14 1/2 Lg	15
48A	D-4951	Tie Strap - 7 3/8 Lg	15

Converyor Hydraulic - 9800 Tow Between - Dual Fan			
Item	**Part No.**	**Description**	**Qty**
48B	S13336	Tie Strap - 24 Lg	3
49	C-4698	Nylon Oil Line Clamp (STD-4) (Tillage-24)	30
50	S-1299	Hex Bolt - 3/8 x 4 1/2 Lg.	3
51	C-3664	Hex Bolt - 3/8 x 5 1/2 Lg.	6
52	W-538	Flatwasher - 3/8	7
53	M-3388	Locknut - 3/8	7
54	F-4565	Hyd Hose - 1/2 x 60 Lg w/7/8-14 FJIC (#10)	1
55	S22403	Hyd Hose - 1/2 x 120 Lg - 7/8-14 FJIC (#10)	2
56	N36833	Oil Line - 1 x 94 Lg w/ 1 5/16-12 FJIC (#16)	4
57	N58170	Hyd Hose - 3/4 x 192 Lg - 1 5/16-12 MJIC (#16) x 7/8-14 MORB (#10)	2
58	N58168	Hyd Hose - 3/4 x 36 Lg - 1 5/16-12 MJIC (#16) Ends	2
59	N58169	Hyd Hose - 3/4 x 36 Lg - 1 5/16 -12 MJIC (#16) x 7/8 -14 MORB (#10)	2
60	N58171	90 Elbow - 1 5/16-12 MJIC (#16) x 1 5/16-12 FJIC (#16) Swivel	2
61	D-4808	Oil Line Clamp	8
62	S31476	Plate Spacer - 1 1/2 x 1 1/2 x 1/2 thick	4
63	N58670	Case Drain Header	1
64	C15317	90 Elbow - 3/4-16 MJIC x 3/4-16 MORB	1
65	N34646	90 Elbow - 7/8-14 MJIC x 1 1/16-12 MORB	1
66	K-5806	90 Elbow - Swivel - 7/8-14 MJIC x 7/8-14 FJIC	2
67	* * * * *		
68	N58576	90 Elbow - 1 5/16-12 MJIC (#16) x 1 5/16-12 MORB (#16)	4
69	C26333	45 Elbow - 7/8-14 MJIC x 3/4-16 MORB	2
70	N49599	45 Elbow - 7/8-14 MJIC x 7/8-14 MORB	2
71	* * * * *		
72	**N58349**	**Valve - Solenoid - Hydraulic Assist Auger - 45 gpm**	**1**
73	* * * * *		
74	N37421	Hyd Hose - 3/8 x 108 - 3/4-16 FJIC x 9/16-18 FJIC w/90 Bend	2
75	* * * * *		
76	* * * * *		
77	C-4468	Hyd Hose - 1/2 x 24 Lg - 7/8-14 FJIC (#10)	1
78	C-4385	Hyd Hose - 1/2 x 24 Lg - 7/8-14 MJIC (#10) x 7/8-14 FJIC (#10)	1
79	C18779	Hyd Hose - 1/2 x 72 Lg - 7/8-14 FJIC (#10)	2
80	N58677	Hyd Hose - 3/4 x 14 Lg - 1 5/16-12 MJIC (#16) x 1 5/16-12 FJIC (#16) swivel	2
81	N69691	Hyd Hose - 3/4 x 18 Lg - 1 5/16-12 FJIC (#16) x 7/8-14 FJIC (#10)	1
82			
83	N53484	Hyd Hose - 3/4 x 150 Lg - 7/8-14 FJIC swivel ends	2
84	N69239	Hyd Hose - 3/4 x 78 Lg - 1 5/16-12 FJIC (#16) x 1 5/16-12 MJIC (#16)	1
85	* * * * *		
86	* * * * *		
87	N69204	Hyd Hose - 3/4 x 134 Lg - 1 5/16-12 FJIC (#16) x 1 1/16-12 MORB (#12)	1
88	* * * * *		
89	N69213	Hyd Hose - 3/4 x 62 Lg - 1 5/16-12 FJIC (#16) x 1 5/16-12 MJIC (#16)	2
90	N69214	Hyd Hose - 3/4 x 185 Lg - 1 5/16-12 FJIC (#16) x 1 1/16-12 MORB (#12)	1
91	N69217	Hyd Hose - 3/4 x 62 Lg - 1 5/16-12 FJIC (#16) x 7/8-14 FJIC (#10)	1
92	N69202	Mount Bracket	1
93	N58643	Mount Bracket	1
94	W-475	Hex Bolt - 3/8 x 1	3
95	N25457	U-Bolt - 3/8 x 4 x 8	3
96	W-523	Lock Washer 3/8	11
97	W-514	Hex Nut 3/8	8

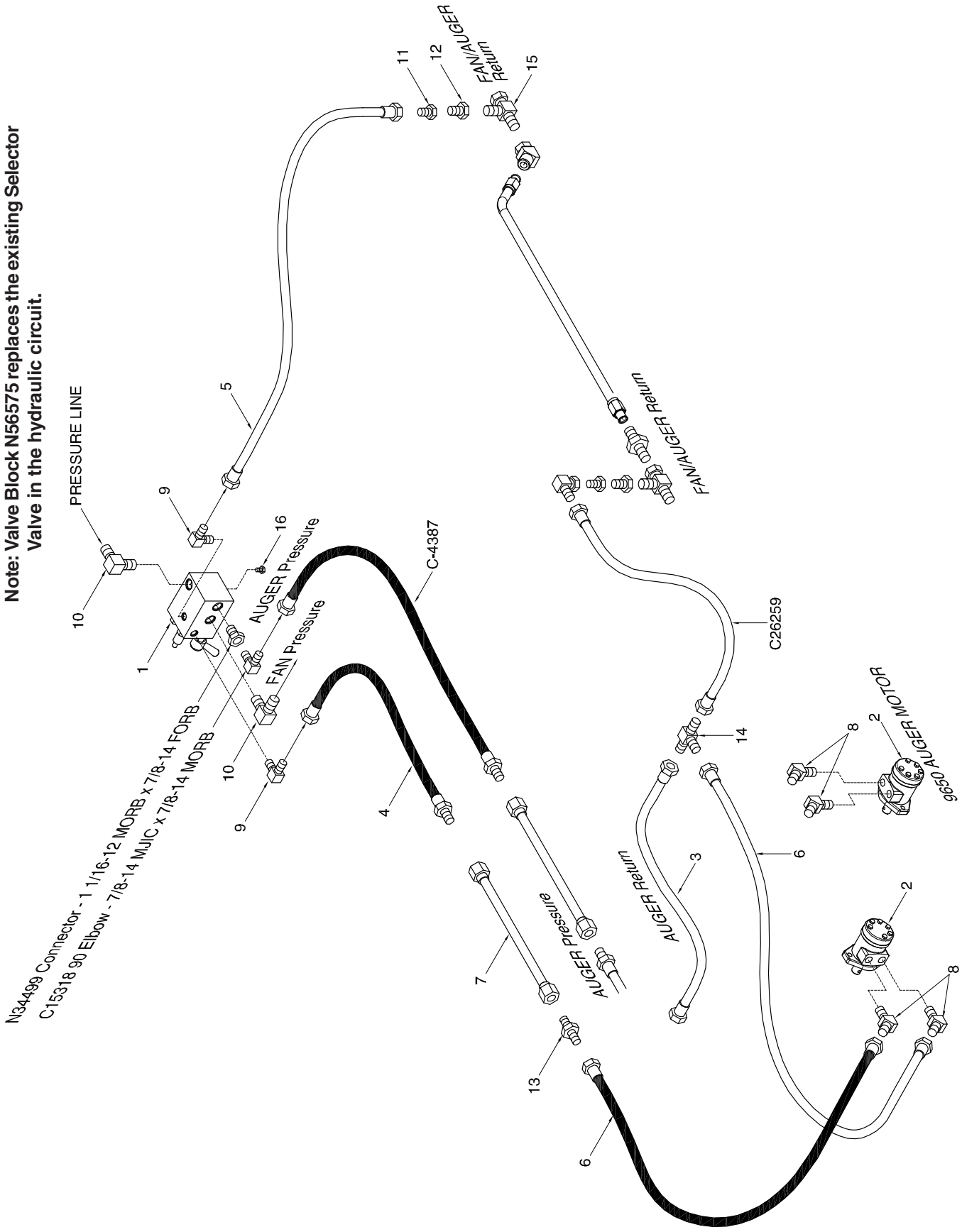
Note: Valve Block N56575 replaces the existing Selector Valve in the hydraulic circuit.
PRESSURE LINE
FAN/AUGER Return
FAN/AUGER Return
AUGER Pressure
FAN Pressure
C-4387
C26259
N34499 Connector - 1 1/16-12 MORB x 7/8-14 FORB
C15318 90 Elbow - 7/8-14 MJIC x 7/8-14 MORB
AUGER Pressure
AUGER Return
9650 AUGER MOTOR
1
2
3
4
5
6
7
8
9
10
11
12
13
14
15
16

Calibration Hydraulics - 9365, 9450 , 9535, 9445, 9550, 9650 - Tow Behind

Item	Part No.	Description	Qty
1	N56575	Valve Block - Hydraulic Calibration (See Section 14 for Details)	1
2	N72140	Motor - Danfoss OMPX-80 (Seal Kit N72139)	1
	N29319	Motor - Danfoss DH 80 (Seal Kit N4807) - Prior to 2021	
3	C-4468	Hyd Hose - 1/2 x 24 Lg w/7/8-14 FJIC	1
4	C-4387	Hyd Hose - 1/2 x 36 Lg w/7/8-14 MJIC x 7/8-14 FJIC (9365, 9450, 9535)	2
	C-4385	Hyd Hose - 1/2 x 24 Lg w/7/8-14 MJIC x 7/8-14 FJIC (9445, 9550, 9650)	1
5	F-4565	Hyd Hose - 1/2 x 60 Lg w/7/8-14 FJIC	1
6	C18779	Hyd Hose - 1/2 x 72 Lg w/7/8-14 FJIC	2
7	C-4368	Oil Line - 5/8 x 88 Lg w/ 7/8-14 FJIC (9365, 9450, 9535)	1
	C-4370	Oil Line - 5/8 x 128 Lg w/ 7/8-14 FJIC (9445, 9550, 9650)	1
8	N49599	45 Elbow - 7/8-14 MJIC x 7/8-14 MORB	2
9	S39505	90 Elbow - 7/8-14 MJIC x 9/16-18 MORB	2
10	N16359	90 Elbow - 1 1/16-12 MJIC x 1 1/16-12 MORB	2
11	N19337	Connector - 7/8-14 MJIC x 1 1/16-12 FJIC	1
12	N19338	Connector - 1 1/16-12 MJIC x 1 5/16-12 FJIC	1
13	C-4469	Connector - 7/8-14 MJIC	1
14	C-4394	Tee - (3) 7/8-14 MJIC	1
15	N19336	Tee - Swivel - (1) 1 5/16-12 FJIC x (2) 1 5/16-12 MJIC	1
16	N51953	Plug - 7/16-20 MORB	1

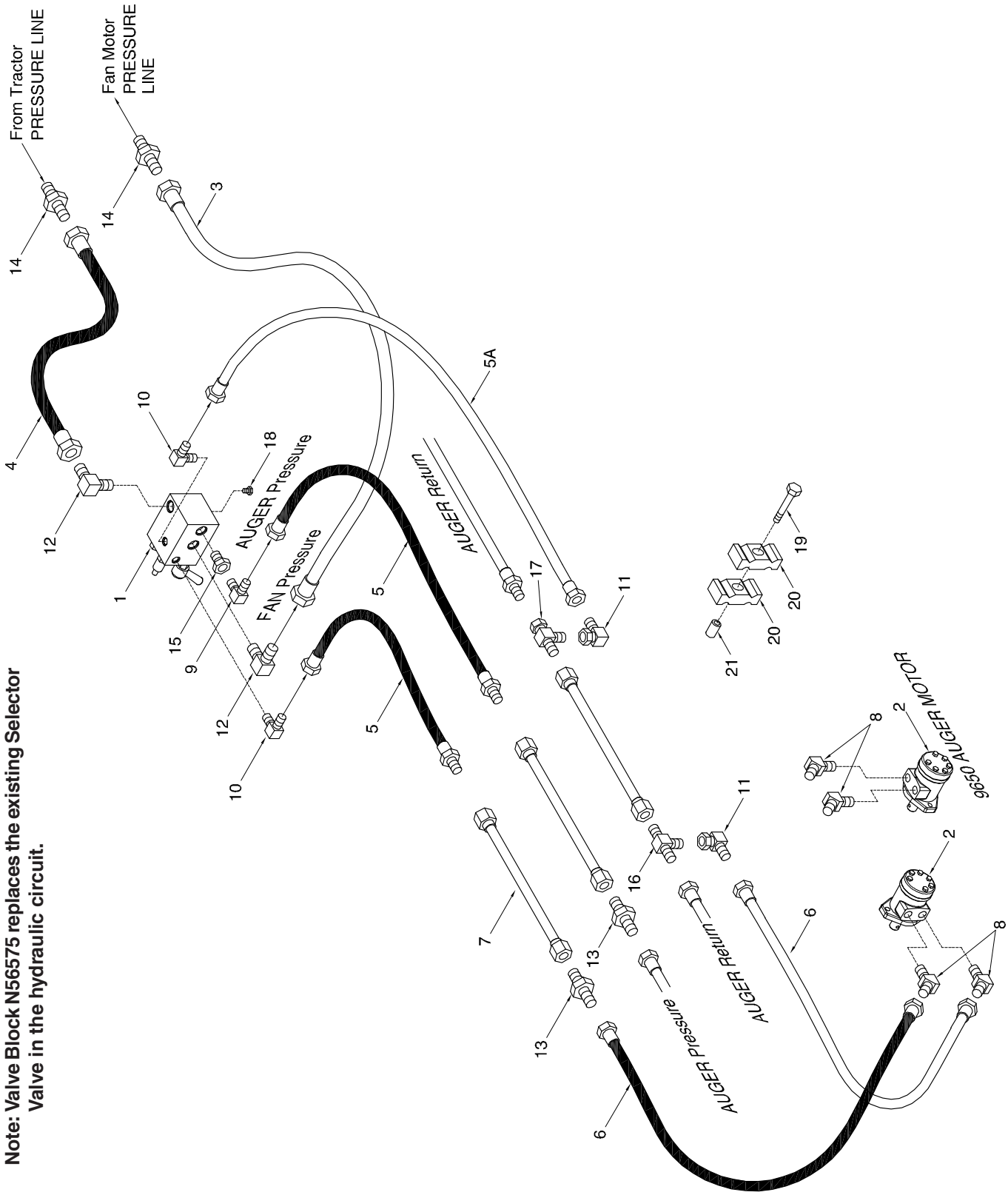

Note: Valve Block N56575 replaces the existing Selector Valve in the hydraulic circuit.

Calibration Hydraulics - 9365, 9450, 9445, 9550, 9650 - Tow Between

Item	Part No.	Description	Qty
1	N56575	Valve Block - Hydraulic Calibration (See Section 14 for Details)	1
2	N72140	Motor - Danfoss OMPX-80 (Seal Kit N72139)	1
	N29319	Motor - Danfoss DH 80 (Seal Kit N4807) - Prior to 2021	
3	N19547	Hyd Hose - 3/4 x 28 Lg w/1 1/16-12 FJIC (9365, 9450, 9445, 9550, 9650)	1
4	N64142	Hyd Hose - 3/4 x 96 Lg - 1 1/16-12 FJIC (9365, 9450, 9445, 9550, 9650)	1
5	C-4388	Hyd Hose - 1/2 x 48 Lg w/7/8-14 MJIC x 7/8-14 FJIC (9365, 9450)	2
	C-4385	Hyd Hose - 1/2 x 24 Lg w/7/8-14 MJIC x 7/8-14 FJIC (9445, 9550, 9650)	2
5A	C-4404	Hyd Hose - 1/2 x 36 Lg w/7/8-14 FJIC x 7/8-14 FJIC (9365, 9450)	1
	C-4468	Hyd Hose - 1/2 x 24 Lg w/7/8-14 FJIC x 7/8-14 FJIC (9445, 9550, 9650)	1
6	C18779	Hyd Hose - 1/2 x 72 Lg w/7/8-14 FJIC	2
7	C-4368	Oil Line - 5/8 x 88 Lg w/ 7/8-14 FJIC (9365, 9450)	1
	C-4370	Oil Line - 5/8 x 128 Lg w/ 7/8-14 FJIC (9445, 9550, 9650)	1
8	N49599	45 Elbow - 7/8-14 MJIC x 7/8-14 MORB	2
9	C15318	90 Elbow - 7/8-14 MJIC x 7/8-14 MORB	1
10	S39505	90 Elbow - 7/8-14 MJIC x 9/16-18 MORB	2
11	K-5806	90 Elbow - Swivel - 7/8-14 MJIC x 7/8-14 FJIC	2
12	N16359	90 Elbow - 1 1/16-12 MJIC x 1 1/16-12 MORB	1
13	C-4469	Connector - 7/8-14 MJIC	3
14	N19348	Connector - 1 1/16-12 MJIC	2
15	N34499	Connector - 1 1/16-12 MORB x 7/8-14 FORB	1
16	C-4394	Tee - (3) 7/8-14 MJIC	1
17	H18746	Tee - Swivel - (2) 7/8-14 MJIC x (1) 7/8-14 FJIC	1
18	N51953	Plug - 7/16-20 MORB	1
19	C-1550	Hex Bolt - 3/8 x 4 Lg	3
20	C-4698	Nylon Clamp - Oil Line	6
21	N21632	Spacer - .364 ID x .540 OD x 3/4 Lg	3

Note: Valve Block N56575 replaces the existing Selector Valve in the hydraulic circuit.

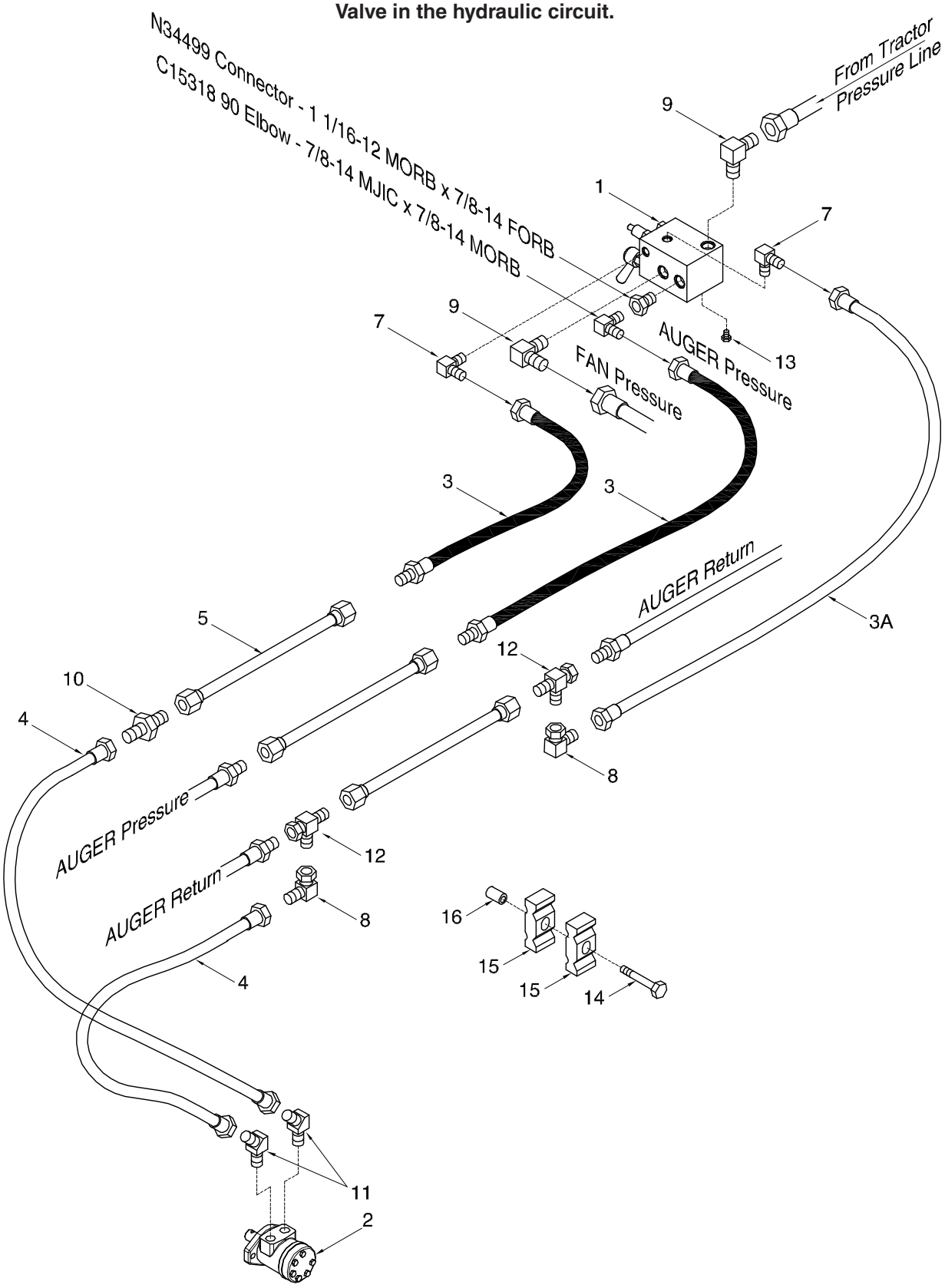

Calibration Hydraulics - 9800 and 91000

Item	Part No.	Description	Qty
1	N56575	Valve Block - Hydraulic Calibration (See Section 14 for Details)	1
2	N72140	Motor - Danfoss OMPX-80 (Seal Kit N72139)	1
	N29319	Motor - Danfoss DH 80 (Seal Kit N4807) - Prior to 2021	
3	C-4385	Hyd Hose - 1/2 x 24 Lg w/7/8-14 MJIC x 7/8-14 FJIC	2
3A	C-4468	Hyd Hose - 1/2 x 24 Lg w/7/8-14 FJIC	1
4	C18779	Hyd Hose - 1/2 x 72 Lg w/7/8-14 FJIC	2
5	C-4370	Oil Line - 5/8 x 128 Lg w/ 7/8-14 FJIC	1
6	C15318	90 Elbow - 7/8-14 MJIC x 7/8-14 MORB	1
7	S39505	90 Elbow - 7/8-14 MJIC x 9/16-18 MORB	2
8	K-5806	90 Elbow - Swivel - 7/8-14 MJIC x 7/8-14 FJIC	2
9	N16359	90 Elbow - 1 1/16-12 MJIC x 1 1/16-12 MORB	2
10	C-4469	Connector - 7/8-14 MJIC	1
11	N49599	45 Elbow - 7/8-14 MJIC x 7/8-14 MORB	2
12	H18746	Tee - Swivel - (2) 7/8-14 MJIC x (1) 7/8-14 FJIC	2
13	N51953	Plug - 7/16-20 MORB	1
14	C-1550	Hex Bolt - 3/8 x 4 Lg	3
15	C-4698	Nylon Clamp - Oil Line	6
16	N21632	Spacer - .364 ID x .540 OD x 3/4 Lg	3

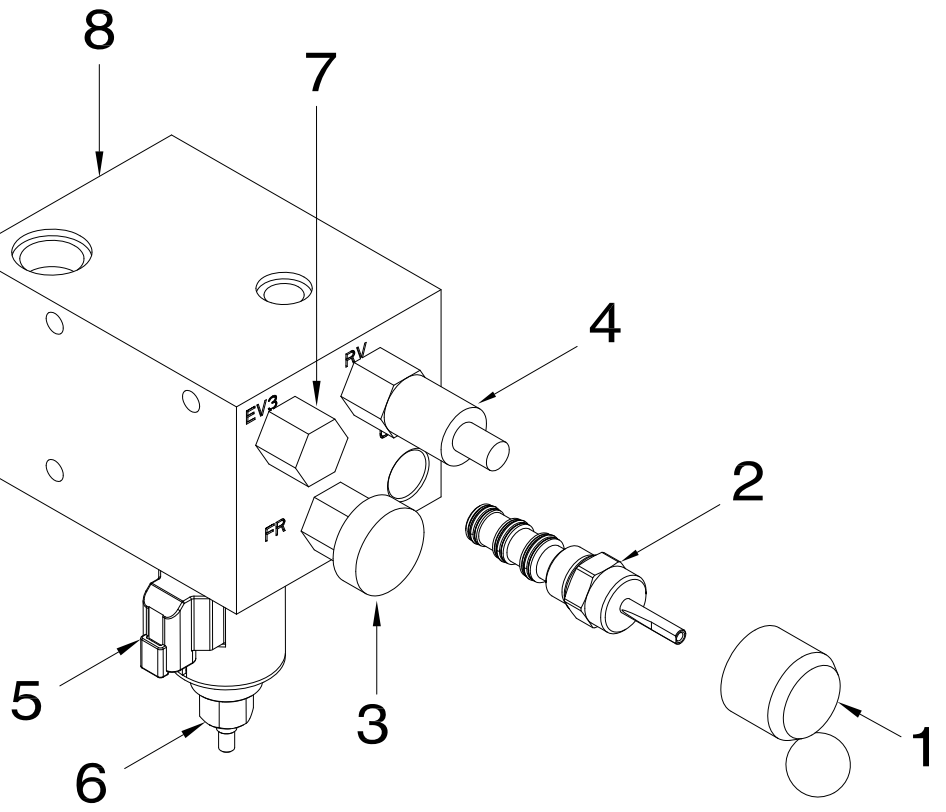

Item	Part No.	Description	Qty
1	N60797	Handle Assembly	1
2	N60979	Manual Rotary Valve - 3 Position (MR10-47A-0-N)	1
3	N60980	Pressure Compenated Flow Regulator (FR50-28A-0-N-1.0)	1
4	N60981	Relief Valve - 300 PSI (RV10-22A-0-N-6/3)	1
5	N60982	12VDC Coil (4303712)	1
6	N60983	Solenoid Valve - (SV10-28-0-N-00)	1
7	N60984	Vented Spool Logic Valve (EV10-S34-0-N-80)	1
	N56575	Hydraulic Calibration Valve Block (Includes all items above)	

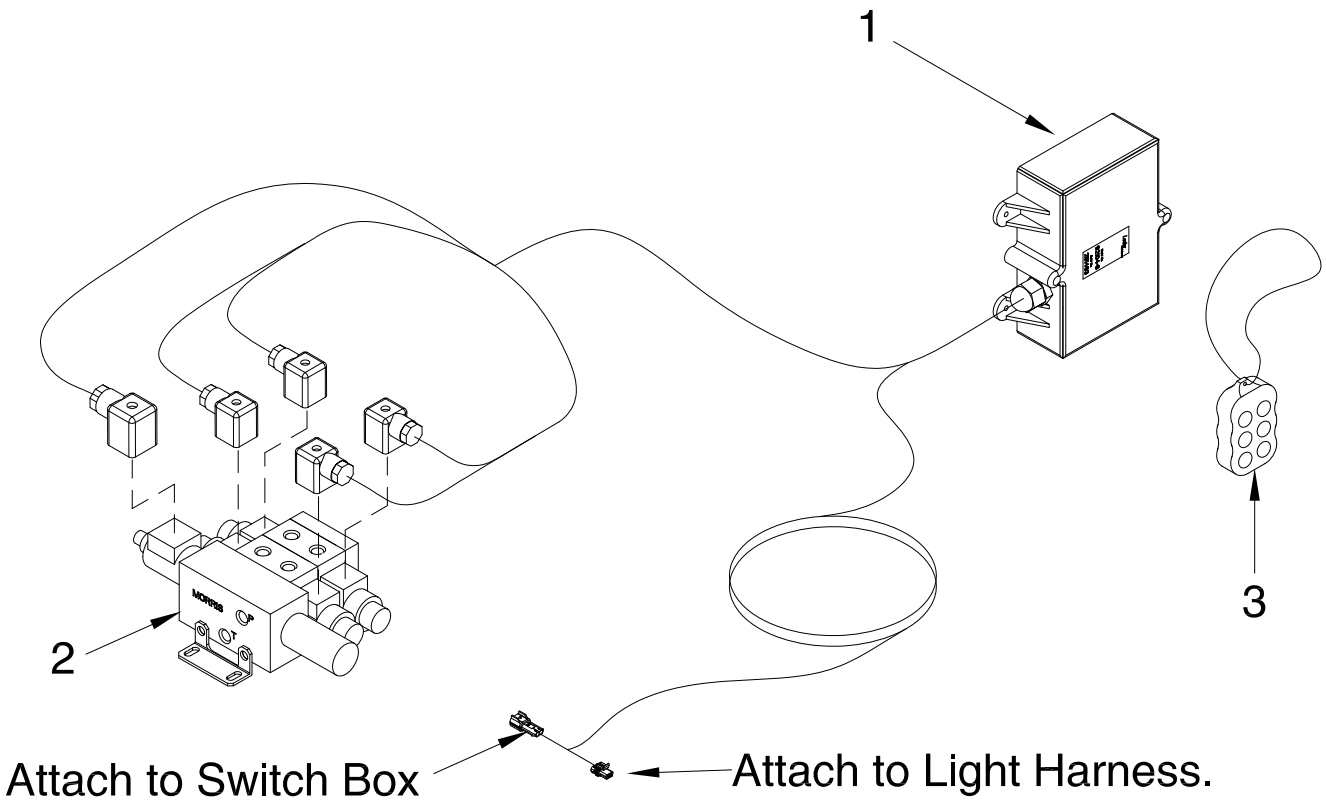

Item	Part No.	Description	Qty
1	N47004	Controller	1
2	N47008	Valve Block	1
3	N48467	Wireless Transmitter	1

Meter Shutoff Hydraulics
9365, 9450 & 9535

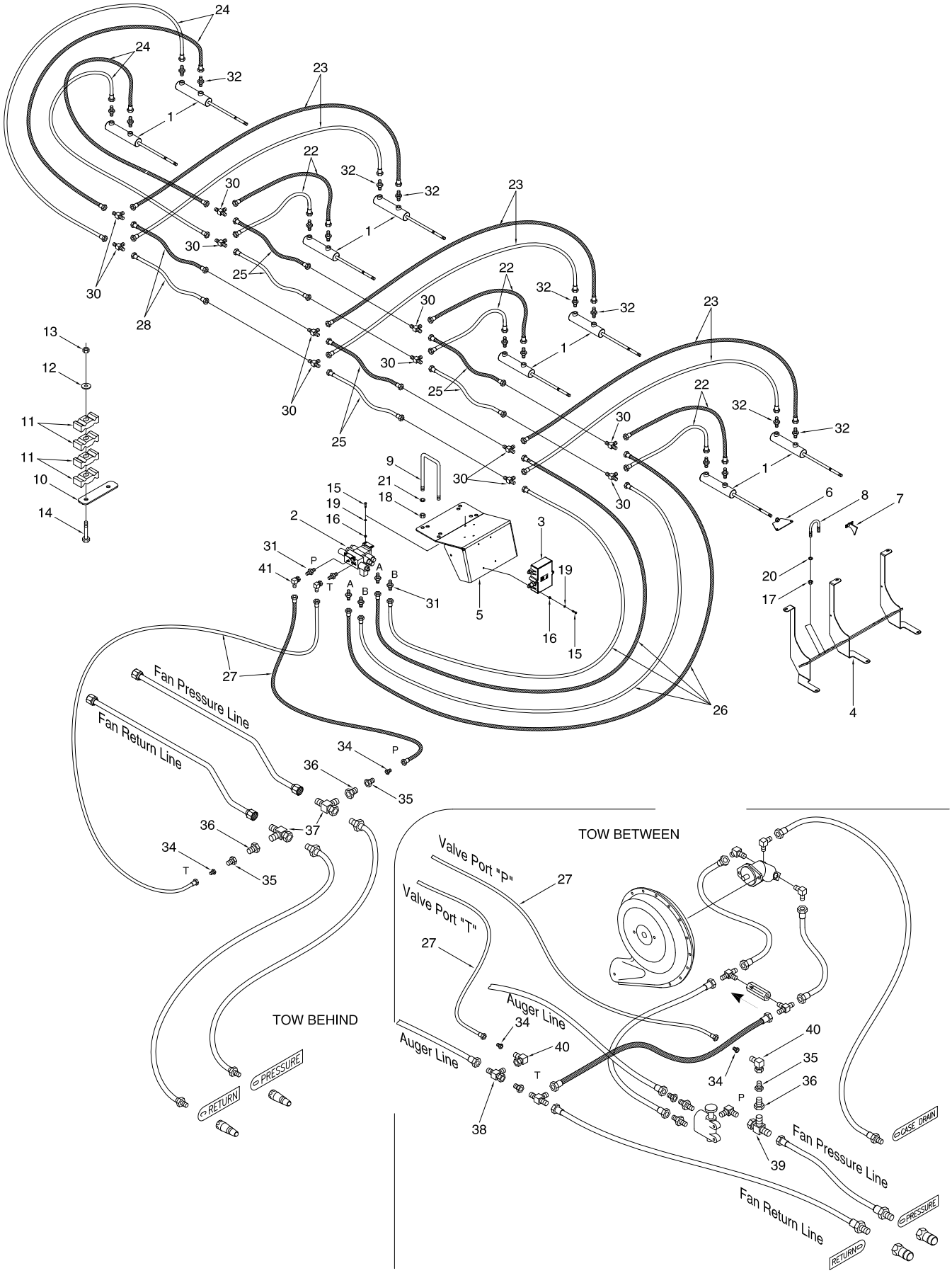

Meter Shutoff Hydraulics - 9365, 9450 & 9535

Item	Part No.	Description	No. Used		
			2Tank	3Tank	4Tank
1	N47298	Cylinder - 1 1/2 x 5	4	6	8
2	N47008	Valve Block	1	1	1
3	N47004	Controller	1	1	1
4	N45825	Mount - Hydraulic Cylinder - 9 Wide metering body	2	3	4
	N55095	Mount - Hydraulic Clyinder - 10 Wide metering body	2	3	4
5	N47007	Mount - Valve Block	1	1	1
6	N47005	Gate Connector	4	6	8
7	N47177	Divider - Meter Body	2	3	4
8	F-5791	U-Bolt - 1/2 x 1 7/8 x 3 Lg	8	12	16
9	C14758	U-Bolt - 5/8 x 4 x 11 1/2 Lg	2	2	2
	N45418	U-Bolt - 5/8 x 3 x 4 Lg	2	2	2
10	N48111	Mounting Plate	1	1	1
11	C-4698	Nylon Clamp - Oil Line	8	12	16
12	W-538	Washer - 3/8	2	3	4
13	M-3388	Lock Nut - 3/8	2	3	4
14	W-481	Hex Bolt - 3/8 x 3 1/2 Lg	2	3	4
15	W-469	Hex Bolt - 1/4 x 3/4 Lg	8	8	8
16	W-512	Hex Nut - 1/4	8	8	8
17	W-516	Hex Nut - 1/2	16	24	32
18	W-517	Hex Nut - 5/8	4	4	4
19	W-521	Lockwasher - 1/4	8	8	8
20	W-525	Lockwasher - 1/2	16	24	32
21	W-526	Lockwasher - 5/8	4	4	4
22	C-4552	Hyd Hose - 1/4 x 24 Lg w/9/16-18 FJIC	2	4	6
23	C14835	Hyd Hose - 1/4 x 36 Lg w/9/16-18 FJIC	2	4	6
24	H18266	Hyd Hose - 1/4 x 80 Lg w/9/16-18 FJIC - 9450 and 9535	-	4	4
	H18267	Hyd Hose - 1/4 x 96 Lg w/9/16-18 FJIC - 9365	4	-	-
25	C15349	Hyd Hose - 1/4 x 48 Lg w/9/16-18 FJIC - 9450 and 9535	-	4	4
26	S39506	Hyd Hose - 1/4 x 66 Lg w/9/16-18 FJIC - 9535	-	-	4
	H18267	Hyd Hose - 1/4 x 96 Lg w/9/16-18 FJIC - 9450	-	4	-
	S39503	Hyd Hose - 1/4 x 132 Lg w/9/16-18 FJIC - 9365	4	-	-
27	S42969	Hyd Hose - 3/8 x 36 Lg w/9/16-18 FJIC - Tow Behind	2	2	2
	N48126	Hyd Hose - 3/8 x 76 Lg w/9/16-18 FJIC - Tow Between	2	2	2
28	C26438	Hyd Hose - 1/4 x 30 Lg w/9/16-18 FJIC - 9535	-	-	4
29	N48120	Electrical Harness (Not shown)	1	1	1
30	C-4393	Tee - (3) 9/16-18 MJIC	4	8	12
31	N29358	Connector - 9/16-18 MJIC x 9/16-18 MORB	6	6	6
32	S34115	Connector - 9/16-18 JIC x 7/16-20 MORB	8	12	16
33	H18269	Connector - 9/16-18 MJIC - 8630	-	4	-
34	F10384	Connector - 9/16-18 MJIC x 7/8-14 FJIC	2	2	2
35	N19337	Connector - 7/8-14 MJIC x 1 1/16-12 FJIC	2	2	2
36	N19338	Connector - 1 1/16-12 MJIC x 1 5/16 FJIC	2	2	2
37	N19336	Tee - Swivel - (1) 1 5/16-12 FJIC x (2) 1 5/16-12 MJIC	2	2	2
38	H18746	Tee - Swivel - (2) 7/8-14 MJIC x (1) 7/8-14 FJIC - Tow Between	1	1	1
39	N29356	Tee - Swivel - (1) 1 1/16-12 FJIC x (2) 1 1/16-12 MJIC - Tow Between	1	1	1
40	K-5806	90 Elbow - Swivel - 7/8-14 MJIC x 7/8-14 FJIC - Tow Between	2	2	2
41	S29967	90 Elbow - Swivel - 9/16-18 MJIC x 9/16-18 FJIC	1	1	1
42	N36597	Hex Bolt - 1/4 x 3/4 Lg - Stainless Steel	4	6	8
43	D-5277	Locknut - 1/4 Serrated	4	6	8
44	N36985	Shutoff Plate - Long	2	3	4
44A	N36995	Shutoff Plate - Short	2	3	4
45	N37339	Socket Head Capscrew - 1/4 x 1/2 Lg	4	6	8

Meter Shutoff Hydraulics
9445, 9550 & 9650

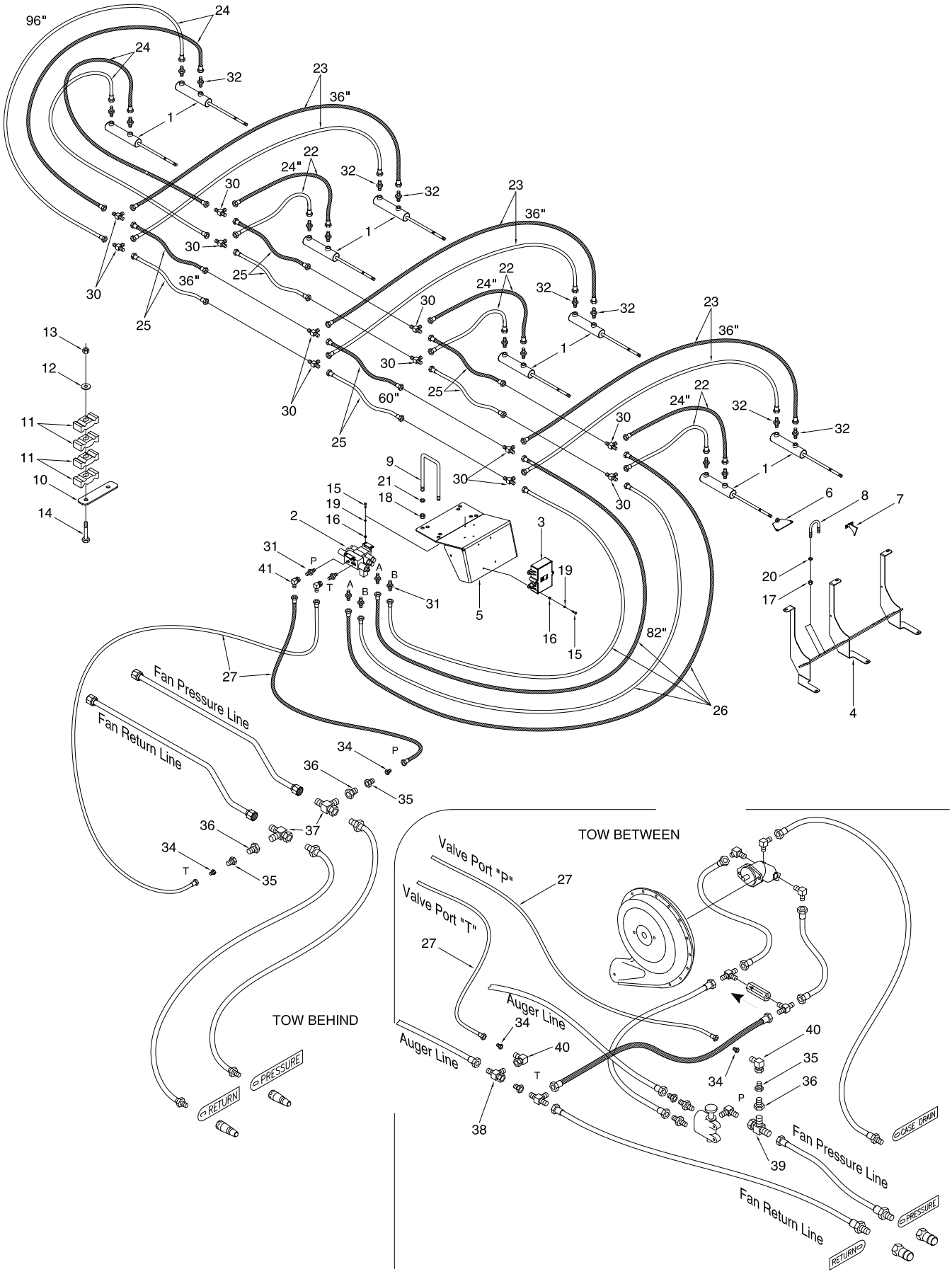

Meter Shutoff Hydraulics - 9445, 9550 & 9650

Item	Part No.	Description	No. Used		
			2Tank	3Tank	4Tank
1	N47298	Cylinder - 1 1/2 x 5	4	6	8
2	N47008	Valve Block	1	1	1
3	N47004	Controller	1	1	1
4	N45825	Mount - Hydraulic Cylinder - 9 Wide Metering body	2	3	4
	N55095	Mount - Hydraulic Clyinder - 10 Wide metering body	2	3	4
5	N47007	Mount - Valve Block	1	1	1
6	N47005	Gate Connector	4	6	8
7	N47177	Divider - Meter Body	2	3	4
8	F-5791	U-Bolt - 1/2 x 1 7/8 x 3 Lg	8	12	16
9	C14758	U-Bolt - 5/8 x 4 x 11 1/2 Lg	2	2	2
	N45418	U-Bolt - 5/8 x 3 x 4 Lg	2	2	2
10	N48111	Mounting Plate	1	1	1
11	C-4698	Nylon Clamp - Oil Line	8	12	16
12	W-538	Washer - 3/8	2	3	4
13	M-3388	Lock Nut - 3/8	2	3	4
14	W-481	Hex Bolt - 3/8 x 3 1/2 Lg	2	3	4
15	W-469	Hex Bolt - 1/4 x 3/4 Lg	8	8	8
16	W-512	Hex Nut - 1/4	8	8	8
17	W-516	Hex Nut - 1/2	16	24	32
18	W-517	Hex Nut - 5/8	4	4	4
19	W-521	Lockwasher - 1/4	8	8	8
20	W-525	Lockwasher - 1/2	16	24	32
21	W-526	Lockwasher - 5/8	4	4	4
22	C-4552	Hyd Hose - 1/4 x 24 Lg w/9/16-18 FJIC	2	4	6
23	C14835	Hyd Hose - 1/4 x 36 Lg w/9/16-18 FJIC	2	4	10
24	H18266	Hyd Hose - 1/4 x 80 Lg w/9/16-18 FJIC - 9550 and 9650	-	4	4
	W21962	Hyd Hose - 1/4 x 108 Lg w/9/16-18 FJIC - 9445	4	-	-
25	C16652	Hyd Hose - 1/4 x 60 Lg w/9/16-18 FJIC	-	4	4
26	C26339	Hyd Hose - 1/4 x 120 Lg w/9/16-18 FJIC - 9650	-	-	4
	F14658	Hyd Hose - 1/4 x 150 Lg w/9/16-18 FJIC - 9550	-	4	-
	S13317	Hyd Hose - 1/4 x 180 Lg w/9/16-18 FJIC - 9445	4	-	-
27	S42969	Hyd Hose - 3/8 x 36 Lg w/9/16-18 FJIC - Tow Behind	2	2	2
	N49110	Hyd Hose - 3/8 x 90 Lg w/9/16-18 FJIC - Tow Between	2	2	2
28	* * * * *				
29	N48120	Electrical Harness (Not shown)	1	1	1
30	C-4393	Tee - (3) 9/16-18 MJIC	4	8	12
31	N29358	Connector - 9/16-18 MJIC x 9/16-18 MORB	6	6	6
32	S34115	Connector - 9/16-18 JIC x 7/16-20 MORB	8	12	16
33	H18269	Connector - 9/16-18 MJIC - 8630	-	4	-
34	F10384	Connector - 9/16-18 MJIC x 7/8-14 FJIC	2	2	2
35	N19337	Connector - 7/8-14 MJIC x 1 1/16-12 FJIC	2	2	2
36	N19338	Connector - 1 1/16-12 MJIC x 1 5/16 FJIC	2	2	2
37	N19336	Tee - Swivel - (1) 1 5/16-12 FJIC x (2) 1 5/16-12 MJIC	2	2	2
38	H18746	Tee - Swivel - (2) 7/8-14 MJIC x (1) 7/8-14 FJIC - Tow Between	1	1	1
39	N29356	Tee - Swivel - (1) 1 1/16-12 FJIC x (2) 1 1/16-12 MJIC - Tow Between	1	1	1
40	K-5806	90 Elbow - Swivel - 7/8-14 MJIC x 7/8-14 FJIC - Tow Between	2	2	2
41	S29967	90 Elbow - Swivel - 9/16-18 MJIC x 9/16-18 FJIC	1	1	1
42	N36597	Hex Bolt - 1/4 x 3/4 Lg - Stainless Steel	4	6	8
43	D-5277	Locknut - 1/4 Serrated	4	6	8
44	N36985	Shutoff Plate - Long	2	3	4
44A	N36995	Shutoff Plate - Short	2	3	4
45	N37339	Socket Head Capscrew - 1/4 x 1/2 Lg	4	6	8

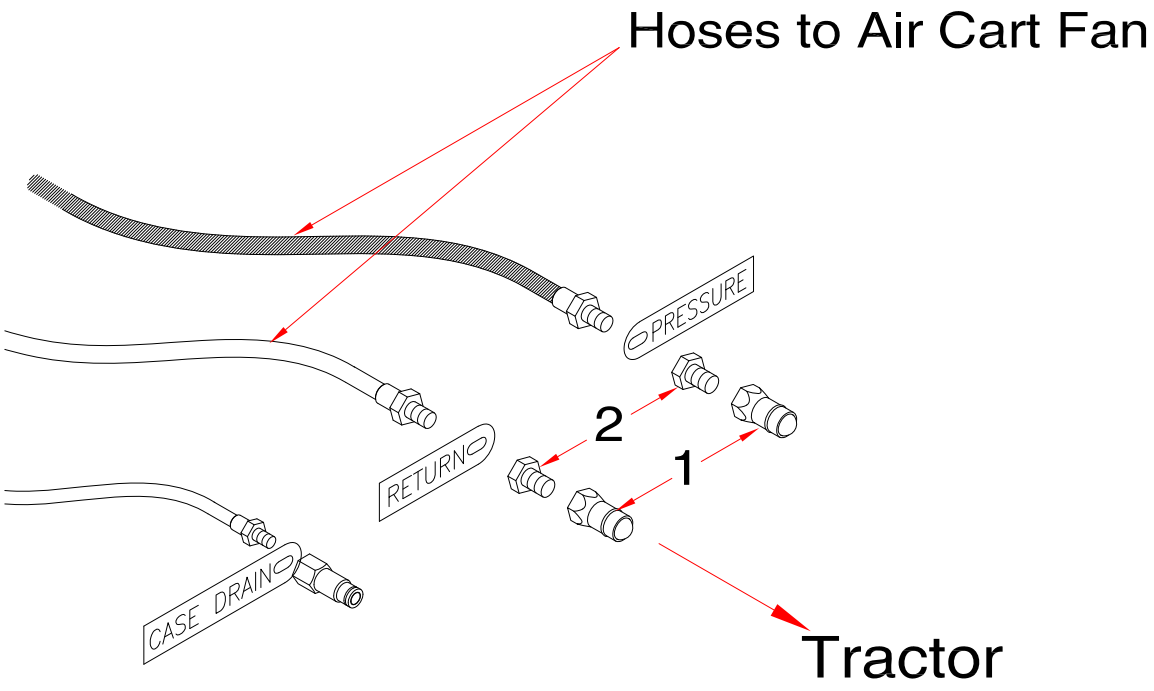

Item	Part No.	Description	Qty
1	N34498	1/2 Male Pioneer Tip - 7/8-14 FORB (Cart - 1)	2
2	N37039	Connector - 1 1/16-12 (#12) FORB x 7/8-14 (#10) MORB	2
	N69669	Kit-Hydraulic Tip Adapter -1/2 Male Pioneer (Includes items above) This Optional Kit is to adapt 1/2 Male Pioneer Tips for units being coupled to tractors with 1/2 Ports. **Note: It is recommended to use the 3/4 Male Pioneer Tips to obtain maximum Fan speed.**	

Section 15:
Hydraulics - Ground Drive
- Prior to March 2014

Section Contents

9365, 9450, 9535 Tow Behind - STD 15-2
9445, 9550, 9650 Tow Behind - STD 15-5
9365, 9450 Tow Between - STD 15-8
9445, 9550, 9650 Tow Between - STD 15-11
Hydraulic Hitch Jack - 9445, 9550, 9650 Tow Between 15-14
Tow Behind Hydraulic Extension Kit for Rear Tow Hitch 15-15
Dual Fan - Tow Behind 15-16
Dual Fan - Tow Between 15-18
Meter Shutoff Hydraulics - 9365, 9450 & 9535 15-20
Meter Shutoff Hydraulics - 9445, 9550 & 9650 15-22
Meter Shutoff Electrical 15-24

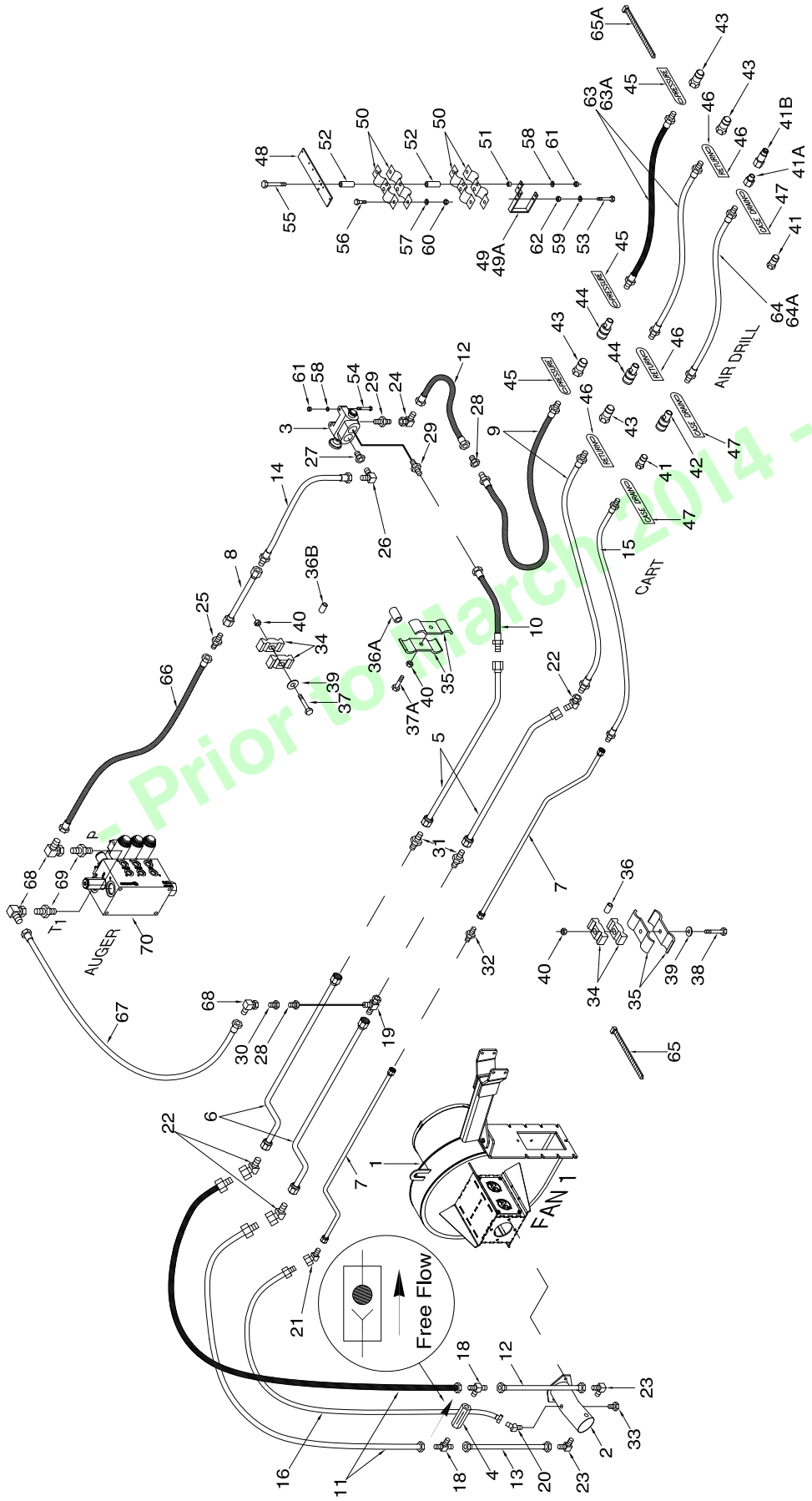
Free Flow
FAN 1
AUGER
CART
AIR DRILL
- Prior to March 2014 -

Hydraulic - 9365, 9450, 9535 Tow Behind - STD

Item	Part No.	Description	Qty
Cart System			
1	* * * * *	Fan - See Section 11	1
2	* * * * *	Hydraulic Motor - Rexroth - See Section 11	1
3	N34506	Selector Valve w/1 1/16-12 FORB - (N31603 - Seal Kit) (C26358 - Knob)	1
4	N16399	Check Valve - 7PSI - 1 1/16-12 ORB	1
5	N19335	Oil Line - 1 x 92 Lg w/45 Bend w/1 1/16-12 FJIC	2
6	N36833	Oil Line - 1 x 94 Lg w / 6 Offset Bend x 1 5/16-12 FJIC	2
7	N36444	Oil Line - 1/2 x 94 Lg w / 6 Offset Bend x 3/4-16 FJIC	2
8	C-4368	Oil Line - 5/8 x 88 Lg w/ 7/8-14 FJIC	2
9	N37037	Hyd Hose - 3/4 x 270 Lg w/1 5/16-12 MJIC x 1 1/16-12 MORB	2
10	N50900	Hyd Hose - 3/4 x 52 Lg w/1 5/16-12 MJIC x 1 1/16-12 FJIC	1
11	N19434	Hyd Hose - 3/4 x 35 Lg w/1 5/16-12 MJIC x 1 1/16-12 FJIC	2
12	N15991	Hyd Hose - 3/4 x 12 Lg w/1 1/16-12 FJIC	2
13	N37900	Hyd Hose - 3/4 x 18 Lg w/1 1/16-12 FJIC	1
14	**C-4387**	**Hyd Hose - 1/2 x 36 Lg w/7/8-14 MJIC x 7/8-14 FJIC**	1
15	N37180	Hyd Hose - 3/8 x 270 Lg w/3/4-16 MJIC x 7/8-14 MORB	1
16	N19475	Hyd Hose - 3/8 x 48 Lg w/9/16-18 FJIC x 3/4-16 MJIC	1
17	* * * * *		
18	N16388	Tee - (2) 1 1/16-12 MJIC x (1) 1 1/16-12 MORB	2
19	N19336	Tee - Swivel - (1) 1 5/16-12 FJIC x (2) 1 5/16-12 MJIC	1
20	**N16143**	**90 Elbow - 9/16-18 JIC x 9/16-18 ORB**	**1**
21	N36380	45 Elbow - Swivel - 3/4-16 FJIC x 3/4-16 MJIC	1
22	N36382	45 Elbow - Swivel - 1 5/16-12 FJIC x 1 5/16-12 MJIC	3
23	N16359	90 Elbow - 1 1/16-12 MJIC x 1 1/16-12 MORB	2
24	N21189	90 Elbow - Swivel - 1 1/16-12 FJIC x 1 1/16-12 MJIC	1
25	C-4469	Connector - 7/8-14 MJIC	1
26	C15318	90 Elbow - 7/8-14 MJIC x 7/8-14 MORB	1
27	N34499	Connector - 1 1/16-12 MORB x 7/8-14 FORB	1
28	N19338	Connector - 1 1/16-12 MJIC x 1 5/16-12 FJIC	1
29	N15990	Connector 1 1/16-12 MJIC x 1 1/16-12 MORB	2
30	N19337	Connector - 7/8-14 MJIC x 1 1/16-12 FJIC	1
31	N16346	Connector - 1 5/16-12 MJIC	**2**
32	N25754	Connector - 3/4-16 MJIC	**1**
33	N16621	Plug - 9/16-18 MORB	1
34	C-4698	Nylon Oil Line Clamp	14
35	D-4808	Oil Line Clamp	10
36	N21632	Oil Line Spacer - 3/8 ID x 9/16 OD x 3/4 Lg	4
36A	D-5011	Oil Line Spacer - .625 ID x 1 OD x 1.562 Lg	1
36B	N16257	Oil Line Spacer - 3/8 ID x 5/8 OD x 5/8 Lg	3
37	W-479	Hex Bolt - 3/8 x 2 1/4 Lg	3
37A	W-477	Hex Bolt - 3/8 x 1 1/2 Lg	1
38	D-5249	Hex Bolt - 3/8 x 3 1/4 Lg	4
39	W-538	Flatwasher - 3/8	7
40	M-3388	Locknut - 3/8	8
41	N34498	1/2 Male Pioneer Tip - 7/8-14 FORB (Cart - 1)	2
41A	K50961	Connector - 3/4-16 MORB x 7/8-14 FORB	1
41B	K50834	3/8 Flat Face Tip - 3/4-16 FORB	1
42	N34488	1/2 Female Pioneer Coupler - 7/8-14 FORB	1
43	N37914	3/4 Male Pioneer Tip - 1 1/16-12 FORB (Cart - 2)	4
	N69669	Kit-Hydraulic Tip Adapter -1/2 Male Pioneer (See Page 14-32 for details)	
44	N37915	3/4 Female Pioneer Coupler - 1 1/16-12 FORB	2
45	N34576	Tag - Hose ID - Air Tank - Fan/Auger - PRESSURE	3
46	N34577	Tag - Hose ID - Air Tank - Fan/Auger - RETURN	3
47	N34578	Tag - Hose ID - Air Tank - Fan/Auger - CASE DRAIN	3
48	N21690	Mount Bracket	1

- Prior to March 2014 -

Hydraulic - 9365, 9450, 9535 Tow Behind - STD

Item	Part No.	Description	Qty
49	N21691	Mount Bracket - 4	1
49A	N27589	Mount Bracket - 6	1
50	N16608	Pioneer Coupler Clamp	4
51	N13901	Bushing - 3/8 ID x 5/8 OD x 3/8 Lg	2
52	N19458	Spacer - 3/8 ID x 9/16 OD x 2 Lg	4
53	C-3918	Hex Bolt - 3/8 x 5 Lg	1
54	**S-1303**	**Hex Bolt - 5/16 x 2 Lg - Cart Selector Valve Mount**	**2**
55	S13337	Hex Bolt - 5/16 x 6 Lg	2
56	W-469	Hex Bolt - 1/4 x 3/4 Lg	4
57	W-521	Lockwasher - 1/4	4
58	**W-522**	**Lockwasher - 5/16 (Cart - 2)**	**4**
59	W-523	Lockwasher - 3/8	1
60	W-512	Hex Nut - 1/4	4
61	**W-513**	**Hex Nut - 5/16 (Cart - 2)**	**4**
62	W-514	Hex Nut - 3/8	1
63	N37036	Hyd Hose - 3/4 x 396 Lg w/1 1/16-12 MORB	2
63A	N37035	Hyd Hose - 3/4 x 348 Lg w/1 1/16-12 MORB	2
63B	N44955	Hyd Hose - 3/4 x 456 Lg w/1 1/16-12 MORB (5-Frame Contour Air Drill)	2
64	N36045	Hyd Hose - 3/8 x 396 Lg w/7/8-14 MORB	1
64A	N36043	Hyd Hose - 3/8 x 348 Lg w/7/8-14 MORB	1
64B	N44956	Hyd Hose - 3/8 x 456 Lg w/7/8-14 MORB (5-Frame Contour Air Drill)	1
65	D-4838	Tie Strap - 14 1/2 Lg	16
65A	D-4951	Tie Strap - 7 3/8 Lg	9
Auger System		**See Auger or Conveyor hydraulics**	
66	C-4468	Auger - Hyd Hose - 1/2 x 24 Lg w/7/8-14 FJIC	1
67	C26259	Auger - Hyd Hose - 1/2 x 108 Lg w/7/8-14 FJIC	1
68	K-5806	Auger - 90 Elbow - Swivel - 7/8-14 MJIC x 7/8-14 FJIC	3
69	N47903	Auger - Connector - 7/8-14 MJIC x 1 1/16-12 MORB	2
70	N51275	Auger - Valve Block	1

- Prior to March 2014 -

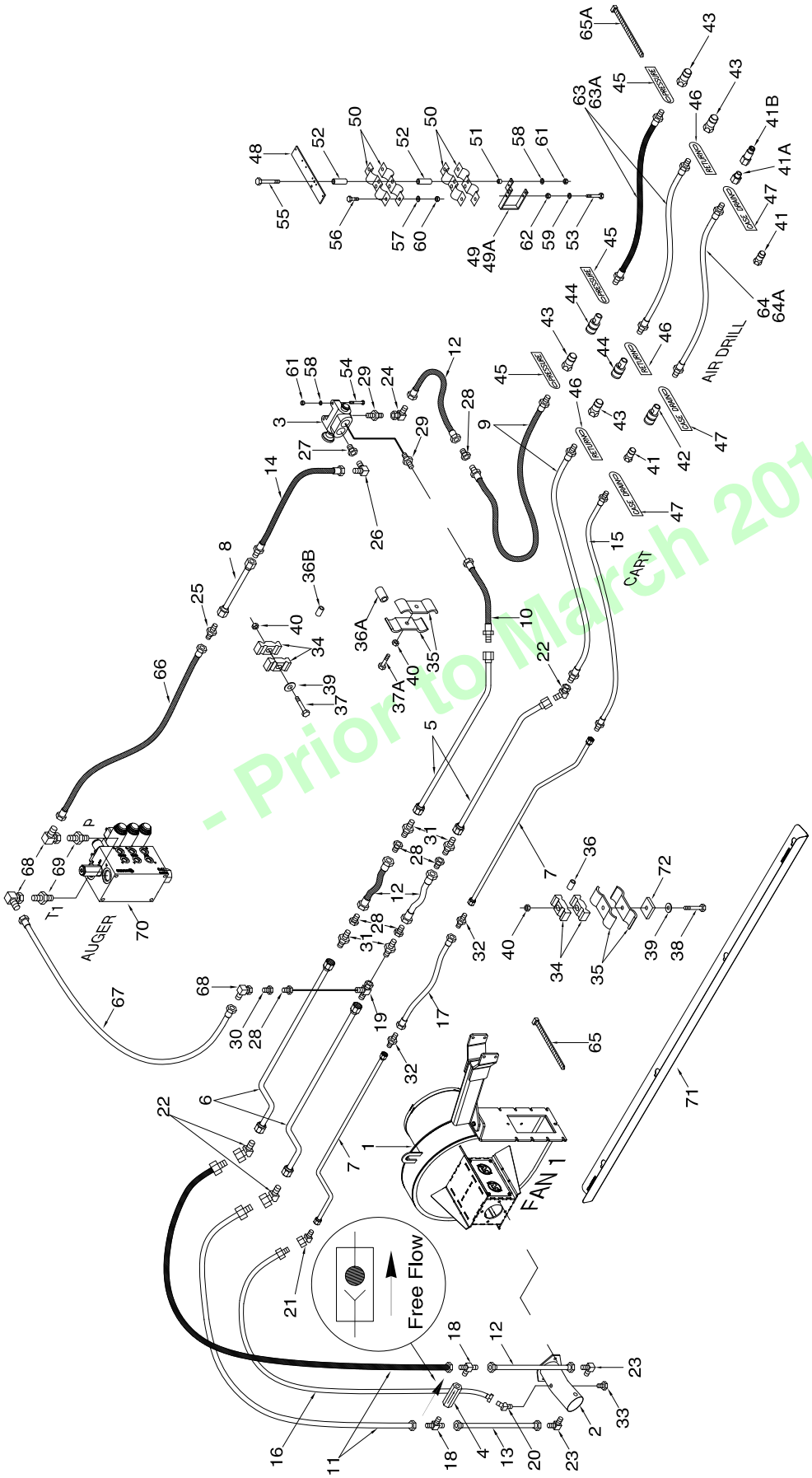

- Prior to March 2014 -

Hydraulic - 9445, 9550, 9650 Tow Behind - STD

Item	Part No.	Description	Qty
Cart System			
1	* * * * *	Fan - See Section 11	1
2	* * * * *	Hydraulic Motor - Rexroth - See Section 11	1
3	N34506	Selector Valve w/1 1/16-12 FORB - (N31603 - Seal Kit) (C26358 - Knob)	1
4	N16399	Check Valve - 7PSI - 1 1/16-12 ORB	1
5	N27601	Oil Line - 1 x 108 Lg w/45 Bend w/1 1/16-12 FJIC	2
6	N36833	Oil Line - 1 x 94 Lg w / 6 Offset Bend x 1 5/16-12 FJIC	2
7	N36444	Oil Line - 1/2 x 94 Lg w / 6 Offset Bend x 3/4-16 FJIC	2
8	C-4370	Oil Line - 5/8 x 128 Lg w/ 7/8-14 FJIC	1
9	N37037	Hyd Hose - 3/4 x 270 Lg w/1 5/16-12 MJIC x 1 1/16-12 MORB	2
10	N55197	Hyd Hose - 3/4 x 57 Lg w/1 5/16-12 MJIC x 1 1/16-12 FJIC	1
11	N19434	Hyd Hose - 3/4 x 35 Lg w/1 5/16-12 MJIC x 1 1/16-12 FJIC	2
12	N15991	Hyd Hose - 3/4 x 12 Lg w/1 1/16-12 FJIC	4
13	N37900	Hyd Hose - 3/4 x 18 Lg w/1 1/16-12 FJIC	1
14	**C-4385**	**Hyd Hose - 1/2 x 24 Lg w/7/8-14 MJIC x 7/8-14 FJIC**	**1**
15	N37180	Hyd Hose - 3/8 x 270 Lg w/3/4-16 MJIC x 7/8-14 MORB	1
16	N19475	Hyd Hose - 3/8 x 48 Lg w/9/16-18 FJIC x 3/4-16 MJIC	1
17	D10821	Hyd Hose - 3/8 x 38 Lg w/3/4-16 FJIC	1
18	N16388	Tee - (2) 1 1/16-12 MJIC x (1) 1 1/16-12 MORB	2
19	N19336	Tee - Swivel - (1) 1 5/16-12 FJIC x (2) 1 5/16-12 MJIC	1
20	N19578	45 Elbow - 9/16-18 MJIC x 9/16-18 MORB	1
21	N36380	45 Elbow - Swivel - 3/4-16 FJIC x 3/4-16 MJIC	1
22	N36382	45 Elbow - Swivel - 1 5/16-12 FJIC x 1 5/16-12 MJIC	3
23	N16359	90 Elbow - 1 1/16-12 MJIC x 1 1/16-12 MORB	2
24	N21189	90 Elbow - Swivel - 1 1/16-12 FJIC x 1 1/16-12 MJIC	1
25	**C-4469**	**Connector - 7/8-14 MJIC.**	**1**
26	C15318	90 Elbow - 7/8-14 MJIC x 7/8-14 MORB	1
27	N34499	Connector - 1 1/16-12 MORB x 7/8-14 FORB	1
28	N19338	Connector - 1 1/16-12 MJIC x 1 5/16-12 FJIC	6
29	N15990	Connector 1 1/16-12 MJIC x 1 1/16-12 MORB	2
30	N19337	Connector - 7/8-14 MJIC x 1 1/16-12 FJIC	1
31	N16346	Connector - 1 5/16-12 MJIC	4
32	N25754	Connector - 3/4-16 MJIC	2
33	N16621	Plug - 9/16-18 MORB	1
34	C-4698	Nylon Oil Line Clamp	14
35	D-4808	Oil Line Clamp	**10**
36	N21632	Oil Line Spacer - 3/8 ID x 9/16 OD x 3/4 Lg	4
36A	D-5011	Oil Line Spacer - .625 ID x 1 OD x 1.562 Lg	1
36B	N16257	Oil Line Spacer - 3/8 ID x 5/8 OD x 5/8 Lg	**3**
37	W-479	Hex Bolt - 3/8 x 2 1/4 Lg	**3**
37A	W-477	Hex Bolt - 3/8 x 1 1/2 Lg	1
38	C-1550	Hex Bolt - 3/8 x 4 Lg	4
39	W-538	Flatwasher - 3/8	**7**
40	M-3388	Locknut - 3/8	**8**
41	**N34498**	**1/2 Male Pioneer Tip - 7/8-14 FORB (Cart - 1)**	**2**
41A	K50961	Connector - 3/4-16 MORB x 7/8-14 FORB	1
41B	K50834	3/8 Flat Face Tip - 3/4-16 FORB	1
42	N34488	1/2 Female Pioneer Coupler - 7/8-14 FORB	1
43	**N37914**	**3/4 Male Pioneer Tip - 1 1/16-12 FORB (Cart - 2)**	**4**
	N69669	Kit-Hydraulic Tip Adapter -1/2 Male Pioneer (See Page 14-32 for details)	
44	N37915	3/4 Female Pioneer Coupler - 1 1/16-12 FORB	2
45	N34576	Tag - Hose ID - Air Tank - Fan/Auger - PRESSURE	3
46	N34577	Tag - Hose ID - Air Tank - Fan/Auger - RETURN	3
47	N34578	Tag - Hose ID - Air Tank - Fan/Auger - CASE DRAIN	3
48	N21690	Mount Bracket	1

- Prior to March 2014 -

Hydraulic - 9445, 9550, 9650 Tow Behind - STD

Item	Part No.	Description	Qty
49	N21691	Mount Bracket - 4	1
49A	N27589	Mount Bracket - 6	1
50	N16608	Pioneer Coupler Clamp	4
51	N13901	Bushing - 3/8 ID x 5/8 OD x 3/8 Lg	2
52	N19458	Spacer - 3/8 ID x 9/16 OD x 2 Lg	4
53	C-3918	Hex Bolt - 3/8 x 5 Lg	1
54	S-1303	Hex Bolt - 5/16 x 2 Lg - Cart Selector Valve Mount	2
55	S13337	Hex Bolt - 5/16 x 6 Lg	2
56	W-469	Hex Bolt - 1/4 x 3/4 Lg	4
57	W-521	Lockwasher - 1/4	4
58	W-522	Lockwasher - 5/16 (Cart - 2)	4
59	W-523	Lockwasher - 3/8	1
60	W-512	Hex Nut - 1/4	4
61	W-513	Hex Nut - 5/16 (Cart - 2)	4
62	W-514	Hex Nut - 3/8	1
63	N37036	Hyd Hose - 3/4 x 396 Lg w/1 1/16-12 MORB	2
63A	N37035	Hyd Hose - 3/4 x 348 Lg w/1 1/16-12 MORB	2
63B	N44955	Hyd Hose - 3/4 x 456 Lg w/1 1/16-12 MORB (5-Frame Contour Air Drill)	2
64	N36045	Hyd Hose - 3/8 x 396 Lg w/7/8-14 MORB	1
64A	N36043	Hyd Hose - 3/8 x 348 Lg w/7/8-14 MORB	1
64B	N44956	Hyd Hose - 3/8 x 456 Lg w/7/8-14 MORB (5-Frame Contour Air Drill)	1
65	D-4838	Tie Strap - 14 1/2 Lg	16
65A	D-4951	Tie Strap - 7 3/8 Lg	9
Auger System		**See Auger or Conveyor hydraulics**	
66	C-4468	Auger - Hyd Hose - 1/2 x 24 Lg w/7/8-14 FJIC	1
67	C26259	Auger - Hyd Hose - 1/2 x 108 Lg w/7/8-14 FJIC	1
68	K-5806	Auger - 90 Elbow - Swivel - 7/8-14 MJIC x 7/8-14 FJIC	3
69	N47903	Auger - Connector - 7/8-14 MJIC x 1 1/16-12 MORB	2
70	N51275	Auger - Valve Block	1
71	N53086	Panel - Oil Line Cover - 2 1/4 tall - Single Fan	2
	N53009	Panel - Oil Line Cover - 3 3/4 tall - Dual Fan	2
72	S31476	Plate Spacer - 1/2	4
	N51965	Hose Cover - 1 1/2 Dia x 60 Lg - Flexible	1
	N51970	Hose Cover - 2 Dia x 150 Lg - Flexible	1

- Prior to March 2014 -

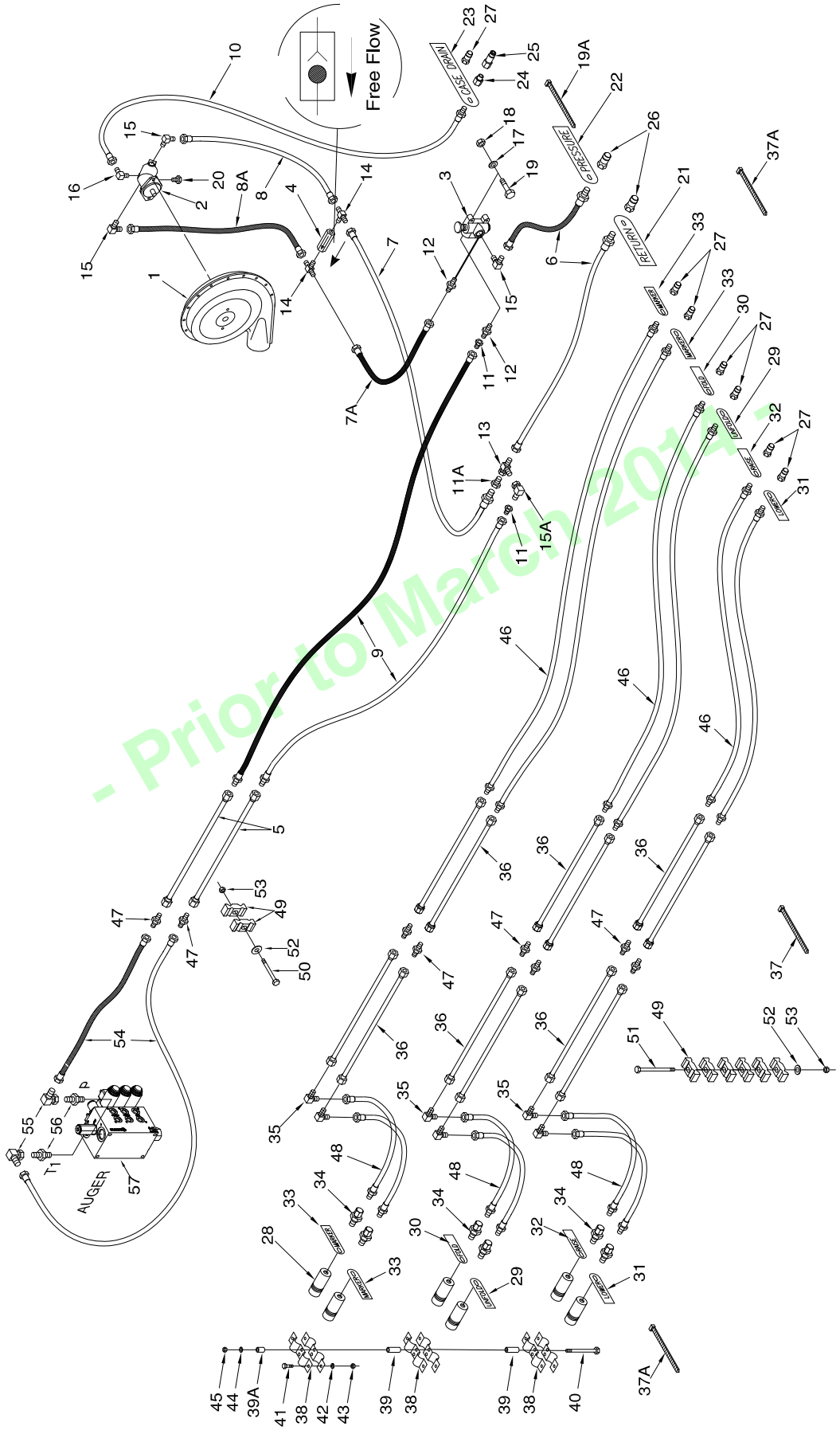
Free Flow
CASE DRAIN
PRESSURE
RETURN
AUGER
- Prior to March 2014 -

Hydraulic - 9365, 9450 Tow Between - STD

Item	Part No.	Description	Qty
1	* * * * *	Fan - See Section 11	1
2	* * * * *	Hydraulic Motor - Rexroth - See Section 11	1
3	N37514	Selector Valve (Seal Kit # N31603) (Knob # C26358)	1
4	N16399	Check Valve - 7PSI - 1 1/16-12 ORB	1
5	C-4368	Oil Line - 5/8 x 88 Lg w/ 7/8-14 FJIC	2
6	N37038	Hyd Hose - 3/4 x 84 Lg w/ 1 1/16-12 MORB x 1 1/16-12 FJIC	2
7	N50900	Hyd Hose - 3/4 x 52 Lg w/1 5/16-12 MJIC x 1 1/16-12 FJIC	1
7A	N25644	Hyd Hose - 3/4 x 35 Lg w/1 1/16-12 FJIC	1
8	N15991	Hyd Hose - 3/4 x 12 Lg w/1 1/16-12 FJIC	1
8A	N37900	Hyd Hose - 3/4 x 18 Lg w/1 1/16-12 FJIC	1
9	N55169	Hyd Hose - 1/2 x 108 Lg w/7/8-14 MJIC x 7/8-14 FJIC	2
10	N37404	Hyd Hose - 3/8 x 152 w/ 7/8-14 MORB X 9/16-18 FJIC	1
11	N19337	Connector - 7/8-14 MJIC x 1 1/16-12 FJIC	2
11A	N19338	Connector - 1 5/16 (#16) FJIC x 1 1/16 (#12) MJIC	1
12	N15990	Connector - 1 1/16-12 MJIC x 1 1/16-12 MORB	2
13	N29356	Tee - Swivel - (1) - 1 1/16 FJIC x (2) - 1 1/16 MJIC	1
14	N16388	Tee - (2) 1 1/16-12 MJIC x (1) 1 1/16-12 MORB	2
15	N16359	90 Elbow - 1 1/16-12 MJIC x 1 1/16-12 MORB	3
15A	N21189	90 Elbow - Swivel - 1 1/16-12 FJIC x 1 1/16-12 MJIC	1
16	N19578	45 Elbow - 9/16-18 MJIC x 9/16-18 MORB	1
17	W-522	Lockwasher - 5/16	2
18	W-513	Hex Nut - 5/16	2
19	S-1303	Hex Bolt - 5/16 x 2 Lg	2
20	N16621	Plug - 9/16-18 MORB	1
21	N34577	Tag - Hose ID Tank - Fan/Auger - RETURN	1
22	N34576	Tag - Hose ID - Tank - Fan/Auger - PRESSURE	1
23	N34578	Tag - Hose ID - Tank - Fan/Auger - CASE DRAIN	1
24	K50961	Connector - 3/4-16 MORB x 7/8-14 FORB	1
25	K50834	3/8 Flat Face Tip - 3/4-16 FORB	1
26	N37914	3/4 Male Pioneer Tip - 1 1/16-12 FORB	2
	N69669	Kit-Hydraulic Tip Adapter -1/2 Male Pioneer (See Page 14-32 for details)	
27	N34498	1/2 Male Pioneer Tip - 7/8-14 FORB	7
28	N34488	1/2 Female Pioneer Coupler - 7/8-14 FORB	6
29	S37662	Tag - Hose ID - Wing Lift - UNFOLD	2
30	S37661	Tag - Hose ID - Wing Lift - FOLD	2
31	S37663	Tag - Hose ID - Depth Control - LOWER	2
32	S37664	Tag - Hose ID - Depth Control - RAISE	2
33	N37657	Tag - Hose ID - WHEEL MARKER	4
34	N34620	Connector - 7/8-14 FJIC x 7/8-14 MORB	6
35	H24393	90 Elbow - 7/8-14 MJIC	8
36	N37348	Oil Line - 5/8 x 84 Lg w/ 7/8-14 FJIC	12
37	D-4838	Tie Strap - 14 1/2 Lg	15
37A	D-4951	Tie Strap - 7 3/8 Lg	15
37B	S13336	Tie Strap - 24 Lg	3
38	N16608	Coupler Clamp - Female Pioneer	6
39	N19458	Spacer Bushing - 0.540 OD x 2	4
39A	N19155	Spacer Bushing - 0.540 OD x 1/2	2
40	S13337	Hex Bolt - 5/16 x 6 Lg	2
41	W-469	Hex Bolt - 1/4 x 3/4 Lg	6
42	W-521	Lockwasher - 1/4	6
43	W-512	Hex Nut - 1/4	6
44	W-522	Lockwasher - 5/16	2
45	W-513	Hex Nut - 5/16	2
46	N37403	Hyd Hose - 1/2 x 192 Lg - 7/8-14 MJIC x 7/8-14 MORB	6
47	C-4469	Connector - 7/8-14 MJIC.	8
48	C-4387	Hyd Hose - 1/2 x 36 Lg w/7/8-14 MJIC x 7/8-14 FJIC Swivel	6
49	C-4698	Nylon Oil Line Clamp **(STD-4) (Tillage-24)**	28
50	W-479	Hex Bolt - 3/8 x 2 1/4 Lg	2
51	C-3664	Hex Bolt - 3/8 x 5 1/2 Lg	4
52	W-538	Flatwasher - 3/8	6

- Prior to March 2014 -

Hydraulic - 9365, 9450 Tow Between - STD

Item	Part No.	Description	Qty
53	M-3388	Locknut - 3/8	6
Auger System		**See Auger or Conveyor hydraulics**	
54	C-4468	Auger - Hyd Hose - 1/2 x 24 Lg w/7/8-14 FJIC	2
55	K-5806	Auger - 90 Elbow - Swivel - 7/8-14 MJIC x 7/8-14 FJIC	2
56	N47903	Auger - Connector - 7/8-14 MJIC x 1 1/16-12 MORB	2
57	N51275	Auger - Valve Block	1
	N19023	Decal - Danger “HOT” (Not Shown)	1
	N36263	Decal - Warning “BURN HAZARD” (Not Shown)	1
	N36443	Decal - Auger “LEVER POSITION” (Not Shown)	1
	N19031	Decal - “AUGER / FAN” (Not Shown)	1

- Prior to March 2014 -

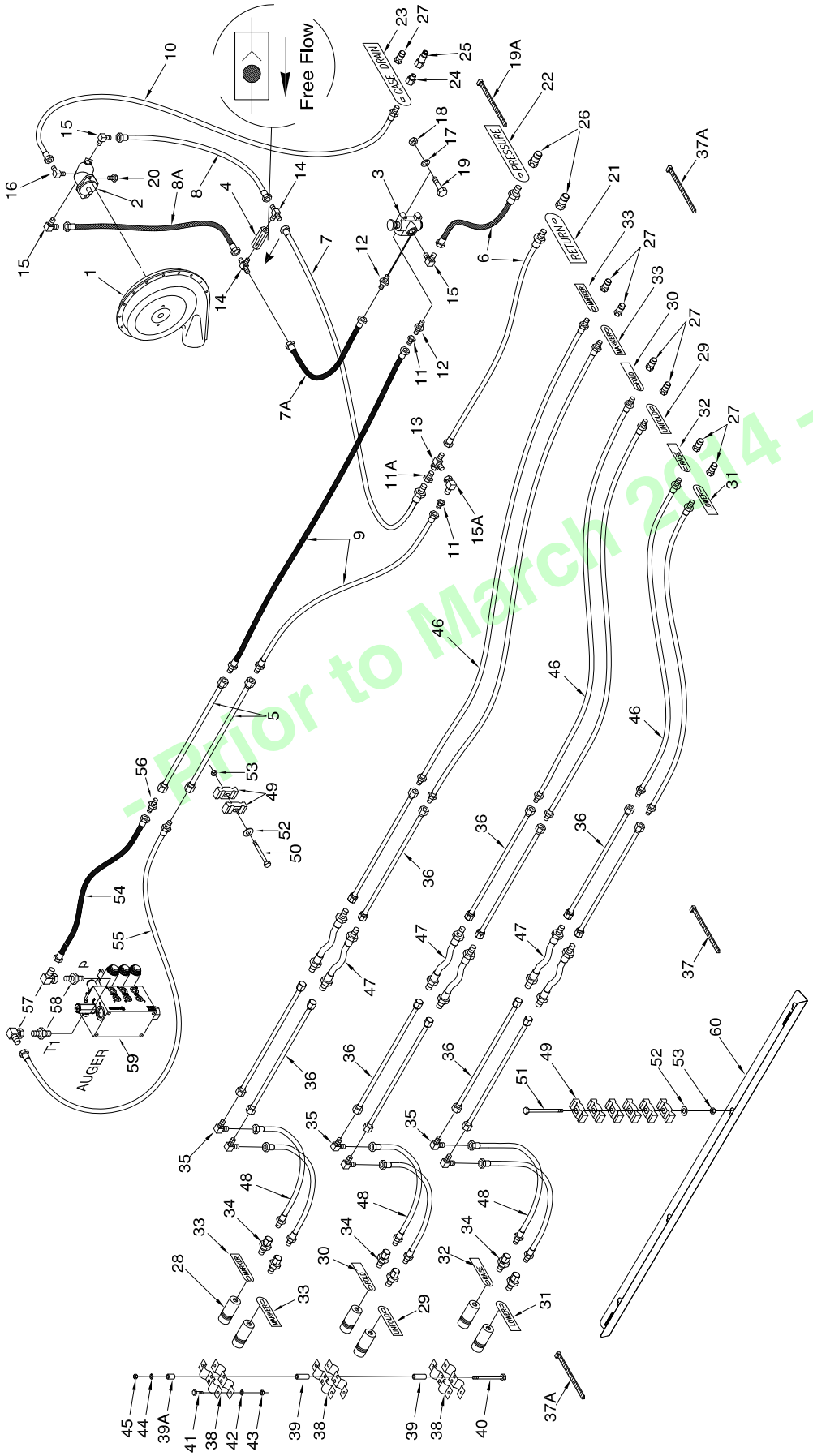
Free Flow
CASE DRAIN
PRESSURE
RETURN
AUGER
- Prior to March 2024 -

Hydraulic - 9445, 9550, 9650 Tow Between - STD

Item	Part No.	Description	Qty
1	* * * * *	Fan - See Section 11	1
2	* * * * *	Hydraulic Motor - Rexroth - See Section 11	1
3	N37514	Selector Valve (Seal Kit # N31603) (Knob # C26358)	1
4	N16399	Check Valve - 7PSI - 1 1/16-12 ORB	1
5	C-4370	Oil Line - 5/8 x 128 Lg w/ 7/8-14 FJIC	2
6	N37038	Hyd Hose - 3/4 x 84 Lg w/ 1 1/16-12 MORB x 1 1/16-12 FJIC	2
7	N50900	Hyd Hose - 3/4 x 52 Lg w/1 5/16-12 MJIC x 1 1/16-12 FJIC	1
7A	N25644	Hyd Hose - 3/4 x 35 Lg w/1 1/16-12 FJIC	1
8	N15991	Hyd Hose - 3/4 x 12 Lg w/1 1/16-12 FJIC	1
8A	N37900	Hyd Hose - 3/4 x 18 Lg w/1 1/16-12 FJIC	1
9	F-5679	Hyd Hose - 1/2 x 96 Lg w/7/8-14 MJIC x 7/8-14 FJIC	2
10	N37404	Hyd Hose - 3/8 x 152 w/ 7/8-14 MORB X 9/16-18 FJIC	1
11	N19337	Connector - 7/8-14 MJIC x 1 1/16-12 FJIC	2
11A	N19338	Connector - 1 5/16 (#16) FJIC x 1 1/16 (#12) MJIC	1
12	N15990	Connector - 1 1/16-12 MJIC x 1 1/16-12 MORB	2
13	N29356	Tee - Swivel - (1) - 1 1/16 FJIC x (2) - 1 1/16 MJIC	1
14	N16388	Tee - (2) 1 1/16-12 MJIC x (1) 1 1/16-12 MORB	2
15	N16359	90 Elbow - 1 1/16-12 MJIC x 1 1/16-12 MORB	3
15A	N21189	90 Elbow - Swivel - 1 1/16-12 FJIC x 1 1/16-12 MJIC	1
16	N19578	45 Elbow - 9/16-18 MJIC x 9/16-18 MORB	1
17	W-522	Lockwasher - 5/16	2
18	W-513	Hex Nut - 5/16	2
19	S-1303	Hex Bolt - 5/16 x 2 Lg	2
20	N16621	Plug - 9/16-18 MORB	1
21	N34577	Tag - Hose ID Tank - Fan/Auger - RETURN	1
22	N34576	Tag - Hose ID - Tank - Fan/Auger - PRESSURE	1
23	N34578	Tag - Hose ID - Tank - Fan/Auger - CASE DRAIN	1
24	K50961	Connector - 3/4-16 MORB x 7/8-14 FORB	1
25	K50834	3/8 Flat Face Tip - 3/4-16 FORB	1
26	N37914	3/4 Male Pioneer Tip - 1 1/16-12 FORB	2
	N69669	Kit-Hydraulic Tip Adapter -1/2 Male Pioneer (See Page 14-32 for details)	
27	N34498	1/2 Male Pioneer Tip - 7/8-14 FORB	7
28	N34488	1/2 Female Pioneer Coupler - 7/8-14 FORB	6
29	S37662	Tag - Hose ID - Wing Lift - UNFOLD	2
30	S37661	Tag - Hose ID - Wing Lift - FOLD	2
31	S37663	Tag - Hose ID - Depth Control - LOWER	2
32	S37664	Tag - Hose ID - Depth Control - RAISE	2
33	N37657	Tag - Hose ID - WHEEL MARKER	4
34	N34620	Connector - 7/8-14 FJIC x 7/8-14 MORB	6
35	H24393	90 Elbow - 7/8-14 MJIC	6
36	N37348	Oil Line - 5/8 x 84 Lg w/ 7/8-14 FJIC	12
37	D-4838	Tie Strap - 14 1/2 Lg	15
37A	D-4951	Tie Strap - 7 3/8 Lg	15
37B	S13336	Tie Strap - 24 Lg	3
38	N16608	Coupler Clamp - Female Pioneer	6
39	N19458	Spacer Bushing - 0.540 OD x 2	4
39A	N19155	Spacer Bushing - 0.540 OD x 1/2	2
40	S13337	Hex Bolt - 5/16 x 6 Lg	2
41	W-469	Hex Bolt - 1/4 x 3/4 Lg	6
42	W-521	Lockwasher - 1/4	6
43	W-512	Hex Nut - 1/4	6
44	W-522	Lockwasher - 5/16	2
45	W-513	Hex Nut - 5/16	2
46	N37403	Hyd Hose - 1/2 x 192 Lg - 7/8-14 MJIC x 7/8-14 MORB	6
47	C-4386	Hyd Hose - 1/2 x 36 Lg w/7/8-14 MJIC	6
48	C-4387	Hyd Hose - 1/2 x 36 Lg w/7/8-14 MJIC x 7/8-14 FJIC Swivel	6
49	C-4698	Nylon Oil Line Clamp **(STD-4) (Tillage-24)**	**30**
50	W-479	Hex Bolt - 3/8 x 2 1/4 Lg	**3**
51	C-3664	Hex Bolt - 3/8 x 5 1/2 Lg	4
52	W-538	Flatwasher - 3/8	**7**

- Printed: March 2014 -

Hydraulic - 9445, 9550, 9650 Tow Between - STD

Item	Part No.	Description	Qty
53	M-3388	Locknut - 3/8	**7**
Auger System			
54	C26344	Auger - Hyd Hose - 1/2 x 42 Lg w/7/8-14 FJIC	1
55	C-4388	Auger - Hyd Hose - 1/2 x 48 Lg w/ 7/8-14 MJIC x 7/8-14 FJIC	1
56	C-4469	Connector - 7/8-14 MJIC	1
57	K-5806	Auger - 90 Elbow - Swivel - 7/8-14 MJIC x 7/8-14 FJIC	2
58	N47903	Auger - Connector - 7/8-14 MJIC x 1 1/16-12 MORB	2
59	N51275	Auger - Valve Block	1
	N19023	Decal - Danger “HOT” (Not Shown)	1
	N36263	Decal - Warning “BURN HAZARD” (Not Shown)	1
	N36443	Decal - Auger “LEVER POSITION” (Not Shown)	1
	N19031	Decal - “AUGER / FAN” (Not Shown)	1
60	N53009	Panel - Oil Line Cover	2

- Prior to March 2014 -

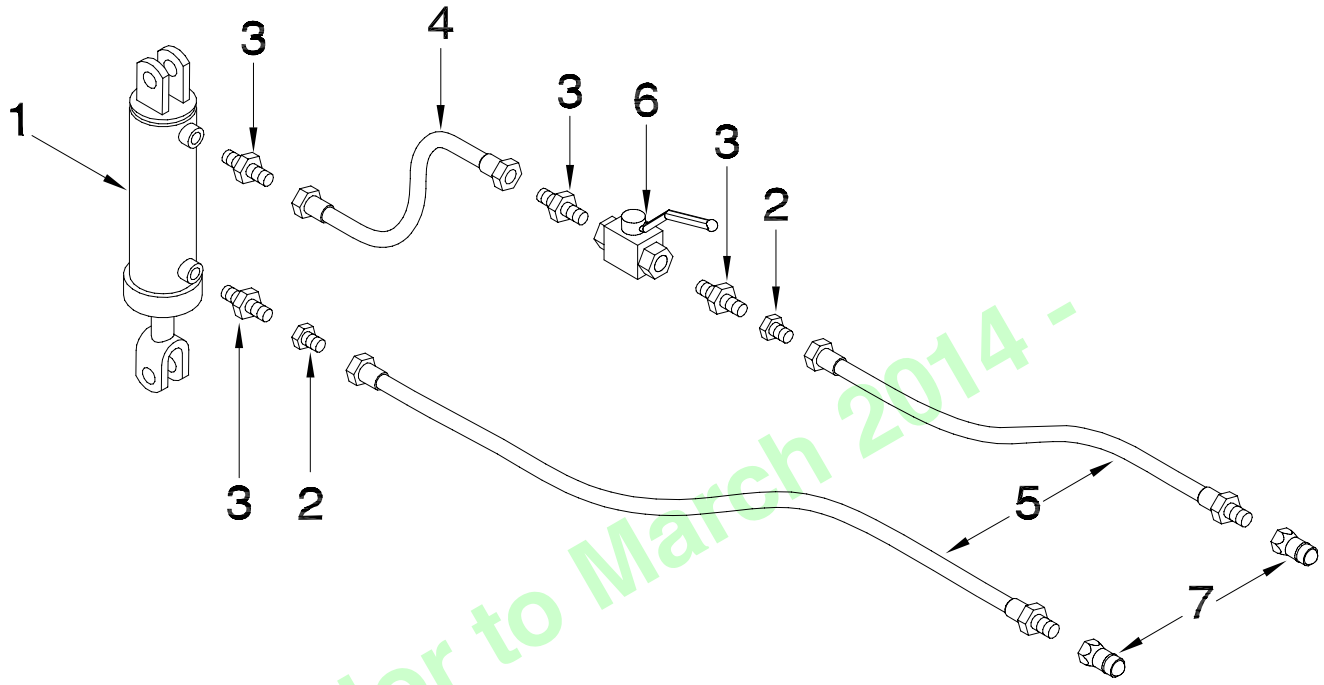

- Prior to March 2014 -

Item	Part No.	Description	Qty
1	C39175	Cylinder - 3 1/2 x 12	1
2	F10384	Connector - 9/16-18 MJIC x 7/8-14 FJIC	2
3	C14840	Connector - 7/8-14 MJIC x 3/4-16 MORB	4
4	N34366	Hyd Hose - 1/2 x 12 Lg w/7/8-14 FJIC	1
5	N37404	Hyd Hose - 3/8 x 152 Lg w/ 7/8-14 MORB X 9/16-18 FJIC	2
6	N42880	Valve - 2 Way Ball	1
6A	N42881	Handle - Valve	1
7	N34498	Male Pioneer Tip - 7/8-14 FORB	2

Options
Tow Behind Hydraulic Extension Kit for Rear Tow Hitch

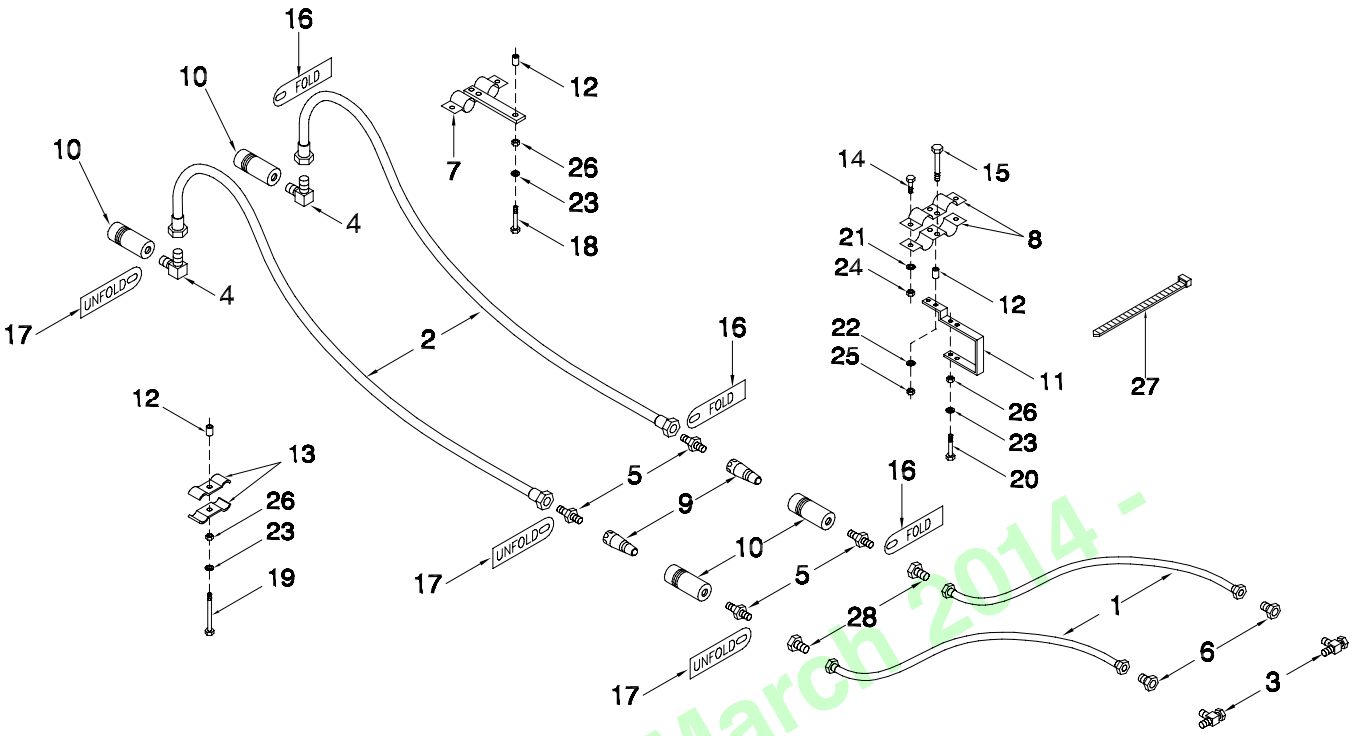

Item	Part No.	Description	Qty
1	S39503	Hyd Hose - 1/4 x 132 Lg W/9/16-18 FJIC	2
2	C31369	Hyd Hose - 1/2 x 468 W7/8 - 14 FJIC	2
3	C-4403	Tee - (2) 9/16-18 MJIC x (1) 9/16-18 FJIC	2
4	C15318	90 Elbow - 7/8-14 MJIC x 7/8-14 MORB	2
5	N34620	Connector - Swivel - 7/8-14 MORB x 7/8-14 FJIC	4
6	N37876	Reducer - 3/4-16 MJIC x 9/16-18 FJIC	2
7	S-1379	Pioneer Coupler Assembly	1
8	N16608	Coupler Clamp - Female Pioneer	2
9	N34498	Male Pioneer Tip - 7/8-14 FORB	2
10	N34488	Pioneer Coupler - 7/8-14 FORB	4
11	N21691	Mounting Bracket	1
12	N16257	Spacer	3
13	D-4808	Oil Line Clamp	2
14	W-469	Hex Bolt - 1/4 x 3/4	2
15	W-473	Hex Bolt - 5/16 x 1 1/2	2
16	S29960	Tag - Hose ID - Wing Lift - FOLD	3
17	S29961	Tag - Hose ID - Wing Lift - UNFOLD	3
18	D-5249	Hex Bolt - 3/8 x 3 1/4	1
19	S-1299	Hex Bolt - 3/8 x 4 1/2	1
20	C-3918	Hex Bolt - 3/8 x 5	1
21	W-521	Lockwasher - 1/4	2
22	W-522	Lockwasher - 5/16	2
23	W-523	Lockwasher - 3/8	3
24	W-512	Hex Nut - 1/4	2
25	W-513	Hex Nut - 5/16	2
26	W-514	Hex Nut - 3/8	3
27	D-4838	Tie Strap	10
28	C-4392	Reducer - 7/8-14 FJIC x 9/16-18 MJIC	1
	H38276	Kit - Hydraulic Extension (Includes All Items above) (ORDER THROUGH WHOLEGOODS)	

- Prior to March 2014 -

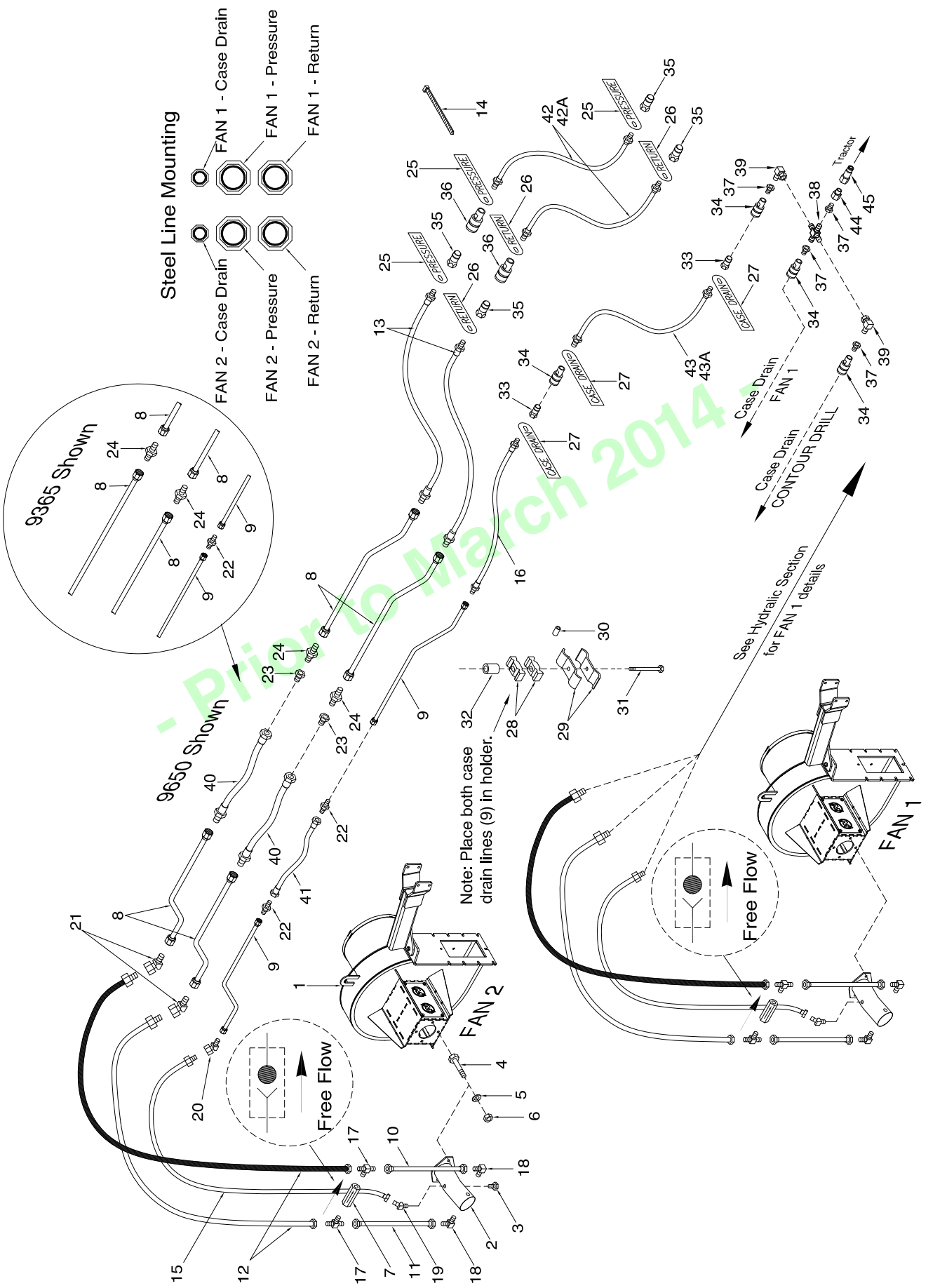
Steel Line Mounting
FAN 1 - Case Drain
FAN 1 - Pressure
FAN 1 - Return
FAN 2 - Case Drain
FAN 2 - Pressure
FAN 2 - Return
9365 Shown
9650 Shown
Note: Place both case drain lines (9) in holder.
See Hydraulic Section for FAN 1 details
Case Drain FAN 1
Case Drain CONTOUR DRILL
Tractor
Free Flow
Free Flow
FAN 2
FAN 1
- Prior to March 2014 -

Dual Fan - Tow Behind

Item	Part No.	Description	Qty
1	N37826	Fan - See Section 11	1
2	N37742	Hydraulic Motor - 16cc - Rexroth (See Section 11)	1
3	N16621	Plug - 9/16-18 MORB	1
4	S-1189	Hex Bolt - 1/2 x 1 3/4 Lg	2
5	W-525	Lockwasher - 1/2	6
6	W-516	Hex Nut - 1/2	6
7	N16399	Check Valve - 7 PSI - 1 1/16-12 ORB	1
8	N36833	Oil Line - 1 x 94 Lg w / 6 Offset Bend x 1 5/16-12 FJIC	4
9	N36444	Oil Line - 1/2 x 94 Lg w / 6 Offset Bend x 3/4-16 FJIC	2
10	N15991	Hyd Hose - 3/4 x 12 Lg w/1 1/16-12 FJIC	1
11	N37900	Hyd Hose - 3/4 x 18 Lg w/1 1/16-12 FJIC	1
12	N53491	Hyd Hose - 3/4 x 62 Lg w/1 5/16-12 MJIC x 1 1/16-12 FJIC	2
13	N37037	Hyd Hose - 3/4 x 270 Lg w/1 5/16-12 MJIC x 1 1/16-12 MORB	2
14	D-4951	Nylon Tie Strap - 7 3/8 Lg	12
15	N53492	Hyd Hose - 3/8 x 72 Lg w/9/16-18 FJIC x 3/4-16 MJIC	2
16	N37180	Hyd Hose - 3/8 x 270 Lg w/3/4-16 MJIC x 7/8-14 MORB	1
17	N16388	Tee - (2) 1 1/16-12 MJIC x (1) 1 1/16-12 MORB	2
18	N16359	90 Elbow - 1 1/16-12 MJIC x 1 1/16-12 MORB	2
19	N19578	45 Elbow - 9/16-18 MJIC x 9/16-18 MORB	1
20	N36380	45 Elbow - Swivel - 3/4-16 FJIC x 3/4-16 MJIC	1
21	N36382	45 Elbow - Swivel - 1 5/16-12 FJIC x 1 5/16-12 MJIC	2
22	N25754	Connector - 3/4-16 MJIC	2
23	N19338	Connector - 1 5/16-12 FJIC x 1 1/16-12 MJIC - (8435 to 8650)	2
24	N16346	Connector - 1 5/16-12 MJIC	3
25	N34576	Tag - Hose ID - Air Tank - Fan/Auger - PRESSURE	3
26	N34577	Tag - Hose ID - Air Tank - Fan/Auger - RETURN	3
27	N34578	Tag - Hose ID - Air Tank - Fan/Auger - CASE DRAIN	3
28	C-4698	Nylon Oil Line Clamp	14
29	D-4808	Oil Line Clamp	8
30	N21632	Oil Line Spacer	4
31	N40761	Hex Bolt - 3/8 x 7 1/2 Lg - (8240 to 8425)	4
	C-3664	Hex Bolt - 3/8 x 5 1/2 Lg - (8435 to 8650)	4
32	N15559	Spacer - 0.385 ID x 5/8 OD x 1 Lg	4
33	N34498	Male Pioneer Tip - 7/8-14 FORB	3
34	N34488	Pioneer Coupler - 7/8-14 FORB	3
35	N37914	3/4 Male Tip - 1 1/16-12 FORB	2
	N69669	Kit-Hydraulic Tip Adapter -1/2 Male Pioneer (See Page 14-32 for details)	
36	N37915	3/4 Female Coupler - 1 1/16-12 FORB	2
37	N34620	Connector - Swivel - 7/8-14 MORB x 7/8-14 FJIC	4
38	C-4401	Cross - (4) 7/8-14 MJIC	1
39	K-5806	90 Elbow - Swivel - 7/8-14 MJIC x 7/8-14 FJIC	2
40	N19434	Hyd Hose - 3/4 x 35 Lg w/1 5/16-12 MJIC x 1 1/16-12 FJIC - (9445, 9550, 9650)	4
41	D10821	Hyd Hose - 3/8 x 38 Lg w/3/4-16 FJIC - (9445, 9550, 9650)	1
42	N37036	Hyd Hose - 3/4 x 396 Lg w/1 1/16-12 MORB	2
42A	N37035	Hyd Hose - 3/4 x 348 Lg w/1 1/16-12 MORB	2
42B	N44955	Hyd Hose - 3/4 x 456 Lg w/1 1/16-12 MORB (5-Frame Contour Air Drill)	2
43	N36045	Hyd Hose - 3/8 x 396 Lg w/7/8-14 MORB	1
43A	N36043	Hyd Hose - 3/8 x 348 Lg w/7/8-14 MORB	1
43B	N44956	Hyd Hose - 3/8 x 456 Lg w/7/8-14 MORB (5-Frame Contour Air Drill)	1
44	K50961	Connector - 3/4-16 MORB x 7/8-14 FORB	1
45	K50834	3/8 Flat Face Tip - 3/4-16 FORB	1

- Prior To March 2014 -

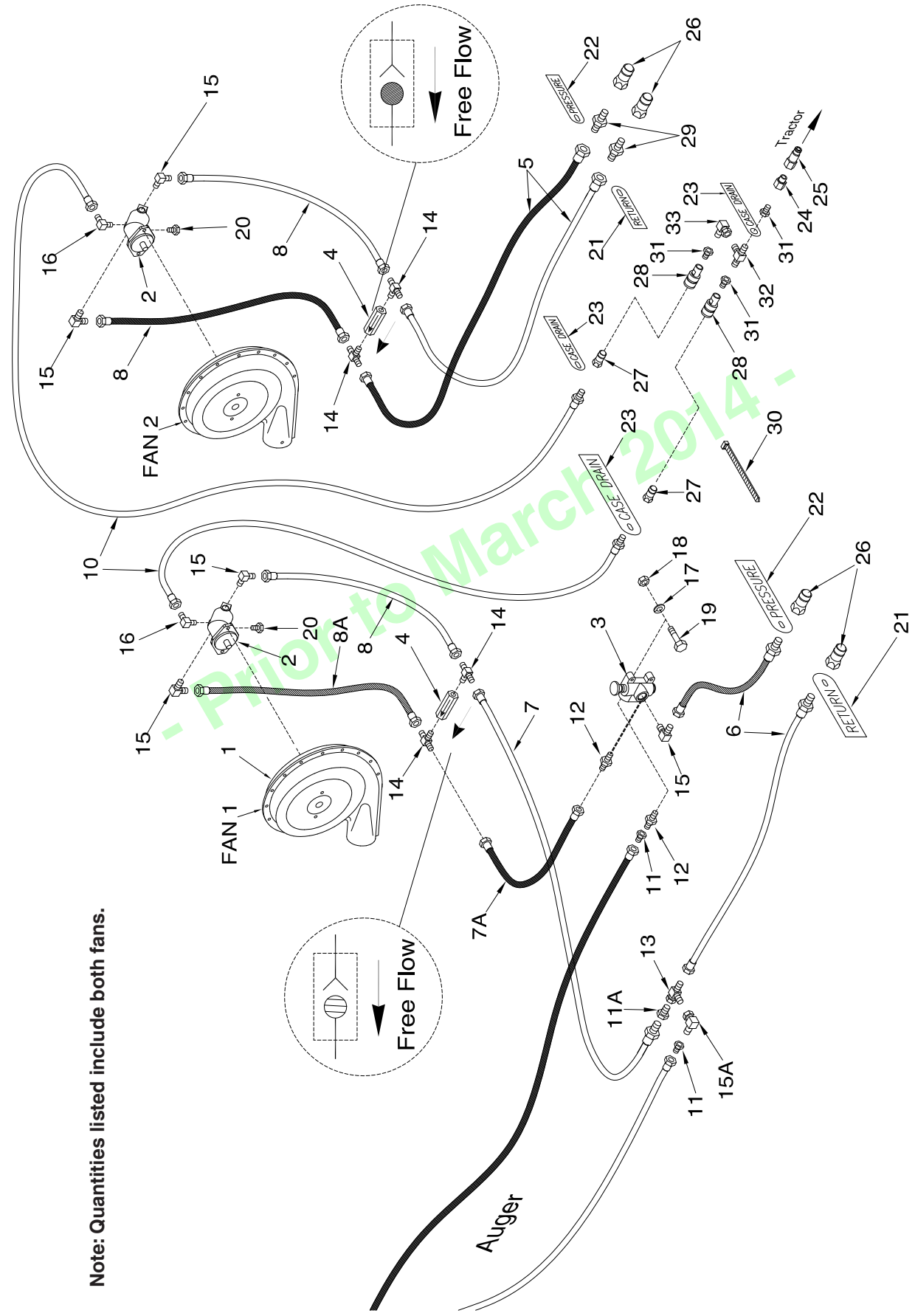

Note: Quantities listed include both fans.

Dual Fan - Tow Between

Item	Part No.	Description	Qty
1	* * * * *	Fan - See Section 11	2
2	* * * * *	Hydraulic Motor - Rexroth - See Section 11	2
3	N37514	Selector Valve (Seal Kit # N31603) (Knob # C26358)	1
4	N16399	Check Valve - 7PSI - 1 1/16-12 ORB	2
5	N50084	Hyd Hose - 3/4 x 132 Lg w/ 7/8-14 FJIC x 1 1/16-12 FJIC	2
6	N37038	Hyd Hose - 3/4 x 84 Lg w/ 1 1/16-12 MORB x 1 1/16-12 FJIC	2
7	N50900	Hyd Hose - 3/4 x 52 Lg w/1 5/16-12 MJIC x 1 1/16-12 FJIC	1
7A	N25644	Hyd Hose - 3/4 x 35 Lg w/1 1/16-12 FJIC	1
8	N15991	Hyd Hose - 3/4 x 12 Lg w/1 1/16-12 FJIC	3
8A	N37900	Hyd Hose - 3/4 x 18 Lg w/1 1/16-12 FJIC	1
9	F-5679	Hyd Hose - 1/2 x 96 Lg w/7/8-14 MJIC x 7/8-14 FJIC	2
10	N37404	Hyd Hose - 3/8 x 152 w/ 7/8-14 MORB X 9/16-18 FJIC	1
11	N19337	Connector - 7/8-14 MJIC x 1 1/16-12 FJIC	2
11A	N19338	Connector - 1 5/16 (#16) FJIC x 1 1/16 (#12) MJIC	1
12	N15990	Connector - 1 1/16-12 MJIC x 1 1/16-12 MORB	2
13	N29356	Tee - Swivel - (1) - 1 1/16 FJIC x (2) - 1 1/16 MJIC	1
14	N16388	Tee - (2) 1 1/16-12 MJIC x (1) 1 1/16-12 MORB	4
15	N16359	90 Elbow - 1 1/16-12 MJIC x 1 1/16-12 MORB	5
15A	N21189	90 Elbow - Swivel - 1 1/16-12 FJIC x 1 1/16-12 MJIC	1
16	N19578	45 Elbow - 9/16-18 MJIC x 9/16-18 MORB	2
17	W-522	Lockwasher - 5/16	2
18	W-513	Hex Nut - 5/16	2
19	S-1303	Hex Bolt - 5/16 x 2 Lg	2
20	N16621	Plug - 9/16-18 MORB	2
21	N34577	Tag - Hose ID Tank - Fan/Auger - RETURN	2
22	N34576	Tag - Hose ID - Tank - Fan/Auger - PRESSURE	2
23	N34578	Tag - Hose ID - Tank - Fan/Auger - CASE DRAIN	3
24	K50961	Connector - 3/4-16 MORB x 7/8-14 FORB	1
25	K50834	3/8 Flat Face Tip - 3/4-16 FORB	1
26	N37914	3/4 Male Pioneer Tip - 1 1/16-12 FORB	2
	N69669	Kit-Hydraulic Tip Adapter -1/2 Male Pioneer (See Page 14-32 for details)	
27	N34498	1/2 Male Pioneer Tip - 7/8-14 FORB	7
28	N34488	1/2 Female Pioneer Coupler - 7/8-14 FORB	2
29	N47903	Connector - 7/8-14 MJIC x 1 1/16-12 MORB	2
30	D-4951	Nylon Tie Strap -7 3/8 Lg	7
	D-4838	Nylon Tie Strap -14 1/2 Lg	2
31	N34620	Connector - Swivel - 7/8-14 MORB x 7/8-14 FJIC	3
32	C-4394	Tee - (3) 7/8-14 MJIC	1
33	K-5806	90 Elbow - Swivel - 7/8-14 MJIC x 7/8-14 FJIC	1

- Prior to March 2014 -

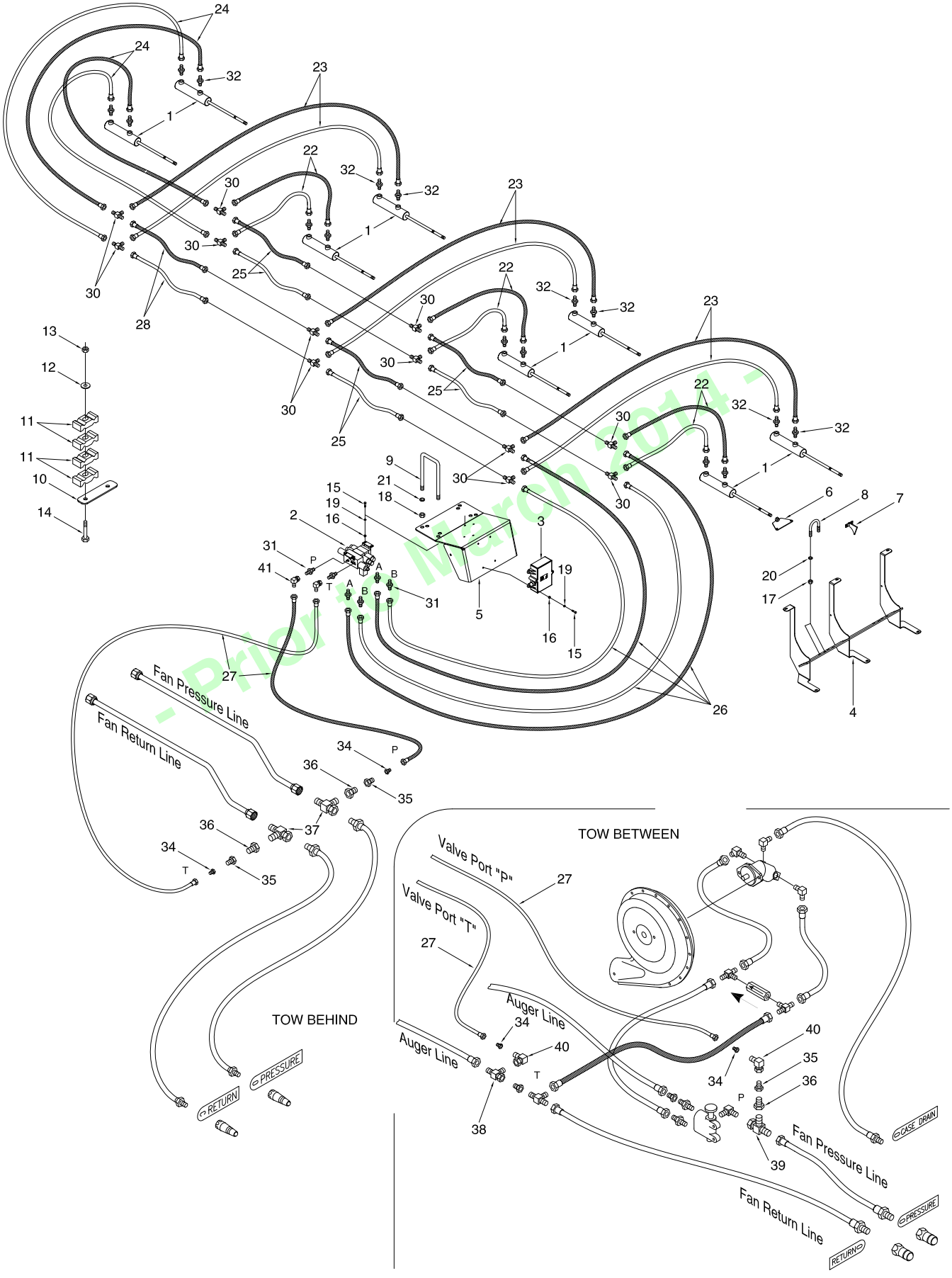

- Prior to March 2014 -

Meter Shutoff Hydraulics - 9365, 9450 & 9535

Item	Part No.	Description	No. Used		
			2Tank	3Tank	4Tank
1	N47298	Cylinder - 1 1/2 x 5	4	6	8
2	N47008	Valve Block	1	1	1
3	N47004	Controller	1	1	1
4	**N45825**	**Mount - Hydraulic Cylinder - 9 Wide metering body**	**2**	**3**	**4**
	N55095	**Mount - Hydraulic Clyinder - 10 Wide metering body**	**2**	**3**	**4**
5	N47007	Mount - Valve Block	1	1	1
6	N47005	Gate Connector	4	6	8
7	N47177	Divider - Meter Body	2	3	4
8	F-5791	U-Bolt - 1/2 x 1 7/8 x 3 Lg	8	12	16
9	C14758	U-Bolt - 5/8 x 4 x 11 1/2 Lg	2	2	2
	N45418	U-Bolt - 5/8 x 3 x 4 Lg	2	2	2
10	N48111	Mounting Plate	1	1	1
11	C-4698	Nylon Clamp - Oil Line	8	12	16
12	W-538	Washer - 3/8	2	3	4
13	M-3388	Lock Nut - 3/8	2	3	4
14	W-481	Hex Bolt - 3/8 x 3 1/2 Lg	2	3	4
15	W-469	Hex Bolt - 1/4 x 3/4 Lg	8	8	8
16	W-512	Hex Nut - 1/4	8	8	8
17	W-516	Hex Nut - 1/2	16	24	32
18	W-517	Hex Nut - 5/8	4	4	4
19	W-521	Lockwasher - 1/4	8	8	8
20	W-525	Lockwasher - 1/2	16	24	32
21	W-526	Lockwasher - 5/8	4	4	4
22	C-4552	Hyd Hose - 1/4 x 24 Lg w/9/16-18 FJIC	2	4	6
23	C14835	Hyd Hose - 1/4 x 36 Lg w/9/16-18 FJIC	2	4	6
24	H18266	Hyd Hose - 1/4 x 80 Lg w/9/16-18 FJIC - 9450 and 9535	-	4	4
	H18267	Hyd Hose - 1/4 x 96 Lg w/9/16-18 FJIC - 9365	4	-	-
25	C15349	Hyd Hose - 1/4 x 48 Lg w/9/16-18 FJIC - 9450 and 9535	-	4	4
26	S39506	Hyd Hose - 1/4 x 66 Lg w/9/16-18 FJIC - 9535	-	-	4
	H18267	Hyd Hose - 1/4 x 96 Lg w/9/16-18 FJIC - 9450	-	4	-
	S39503	Hyd Hose - 1/4 x 132 Lg w/9/16-18 FJIC - 9365	4	-	-
27	S42969	Hyd Hose - 3/8 x 36 Lg w/9/16-18 FJIC - Tow Behind	2	2	2
	N48126	Hyd Hose - 3/8 x 76 Lg w/9/16-18 FJIC - Tow Between	2	2	2
28	C26438	Hyd Hose - 1/4 x 30 Lg w/9/16-18 FJIC - 9535	-	-	4
29	N48120	Electrical Harness (Not shown)	1	1	1
30	C-4393	Tee - (3) 9/16-18 MJIC	4	8	12
31	N29358	Connector - 9/16-18 MJIC x 9/16-18 MORB	6	6	6
32	S34115	Connector - 9/16-18 JIC x 7/16-20 MORB	8	12	16
33	H18269	Connector - 9/16-18 MJIC - 8630	-	4	-
34	F10384	Connector - 9/16-18 MJIC x 7/8-14 FJIC	2	2	2
35	N19337	Connector - 7/8-14 MJIC x 1 1/16-12 FJIC	2	2	2
36	N19338	Connector - 1 1/16-12 MJIC x 1 5/16 FJIC	2	2	2
37	N19336	Tee - Swivel - (1) 1 5/16-12 FJIC x (2) 1 5/16-12 MJIC	2	2	2
38	H18746	Tee - Swivel - (2) 7/8-14 MJIC x (1) 7/8-14 FJIC - Tow Between	1	1	1
39	N29356	Tee - Swivel - (1) 1 1/16-12 FJIC x (2) 1 1/16-12 MJIC - Tow Between	1	1	1
40	K-5806	90 Elbow - Swivel - 7/8-14 MJIC x 7/8-14 FJIC - Tow Between	2	2	2
41	S29967	90 Elbow - Swivel - 9/16-18 MJIC x 9/16-18 FJIC	1	1	1
42	N36597	Hex Bolt - 1/4 x 3/4 Lg - Stainless Steel	4	6	8
43	D-5277	Locknut - 1/4 Serrated	4	6	8
44	N36985	Shutoff Plate - Long	2	3	4
44A	N36995	Shutoff Plate - Short	2	3	4
45	N37339	Socket Head Capscrew - 1/4 x 1/2 Lg	4	6	8

Prior to March 2014 -

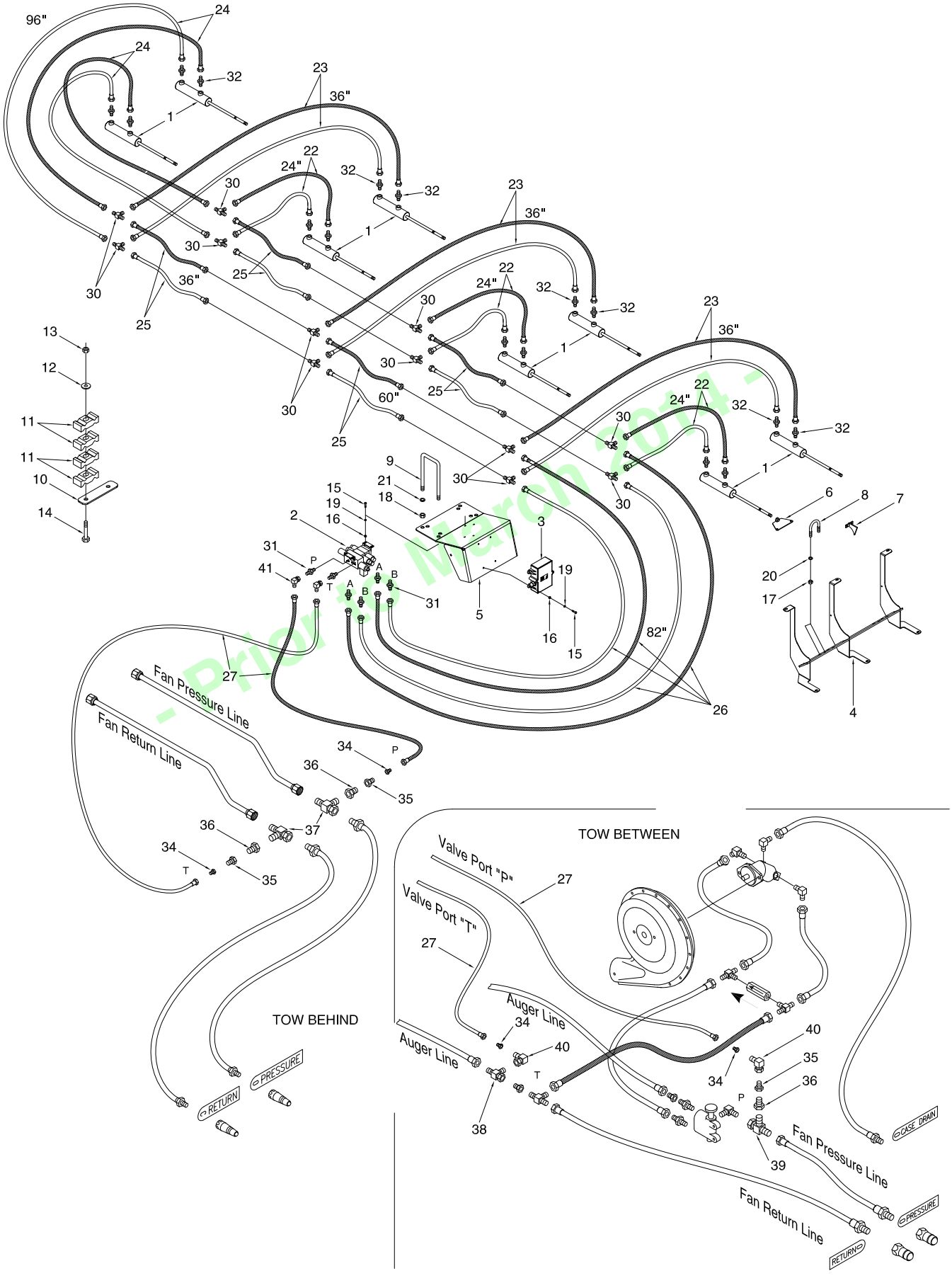

- Prior to March 2014 -

Meter Shutoff Hydraulics - 9445, 9550 & 9650

Item	Part No.	Description	No. Used		
			2Tank	3Tank	4Tank
1	N47298	Cylinder - 1 1/2 x 5	4	6	8
2	N47008	Valve Block	1	1	1
3	N47004	Controller	1	1	1
4	**N45825**	**Mount - Hydraulic Cylinder - 9 Wide Metering body**	**2**	**3**	**4**
	N55095	**Mount - Hydraulic Clyinder - 10 Wide metering body**	**2**	**3**	**4**
5	N47007	Mount - Valve Block	1	1	1
6	N47005	Gate Connector	4	6	8
7	N47177	Divider - Meter Body	2	3	4
8	F-5791	U-Bolt - 1/2 x 1 7/8 x 3 Lg	8	12	16
9	C14758	U-Bolt - 5/8 x 4 x 11 1/2 Lg	2	2	2
	N45418	U-Bolt - 5/8 x 3 x 4 Lg	2	2	2
10	N48111	Mounting Plate	1	1	1
11	C-4698	Nylon Clamp - Oil Line	8	12	16
12	W-538	Washer - 3/8	2	3	4
13	M-3388	Lock Nut - 3/8	2	3	4
14	W-481	Hex Bolt - 3/8 x 3 1/2 Lg	2	3	4
15	W-469	Hex Bolt - 1/4 x 3/4 Lg	8	8	8
16	W-512	Hex Nut - 1/4	8	8	8
17	W-516	Hex Nut - 1/2	16	24	32
18	W-517	Hex Nut - 5/8	4	4	4
19	W-521	Lockwasher - 1/4	8	8	8
20	W-525	Lockwasher - 1/2	16	24	32
21	W-526	Lockwasher - 5/8	4	4	4
22	C-4552	Hyd Hose - 1/4 x 24 Lg w/9/16-18 FJIC	2	4	6
23	C14835	Hyd Hose - 1/4 x 36 Lg w/9/16-18 FJIC	2	4	10
24	H18266	Hyd Hose - 1/4 x 80 Lg w/9/16-18 FJIC - 9550 and 9650	-	4	4
	W21962	Hyd Hose - 1/4 x 108 Lg w/9/16-18 FJIC - 9445	4	-	-
25	C16652	Hyd Hose - 1/4 x 60 Lg w/9/16-18 FJIC	-	4	4
26	C26339	Hyd Hose - 1/4 x 120 Lg w/9/16-18 FJIC - 9650	-	-	4
	F14658	Hyd Hose - 1/4 x 150 Lg w/9/16-18 FJIC - 9550	-	4	-
	S13317	Hyd Hose - 1/4 x 180 Lg w/9/16-18 FJIC - 9445	4	-	-
27	S42969	Hyd Hose - 3/8 x 36 Lg w/9/16-18 FJIC - Tow Behind	2	2	2
	N49110	Hyd Hose - 3/8 x 90 Lg w/9/16-18 FJIC - Tow Between	2	2	2
28	* * * * *				
29	N48120	Electrical Harness (Not shown)	1	1	1
30	C-4393	Tee - (3) 9/16-18 MJIC	4	8	12
31	N29358	Connector - 9/16-18 MJIC x 9/16-18 MORB	6	6	6
32	S34115	Connector - 9/16-18 JIC x 7/16-20 MORB	8	12	16
33	H18269	Connector - 9/16-18 MJIC - 8630	-	4	-
34	F10384	Connector - 9/16-18 MJIC x 7/8-14 FJIC	2	2	2
35	N19337	Connector - 7/8-14 MJIC x 1 1/16-12 FJIC	2	2	2
36	N19338	Connector - 1 1/16-12 MJIC x 1 5/16 FJIC	2	2	2
37	N19336	Tee - Swivel - (1) 1 5/16-12 FJIC x (2) 1 5/16-12 MJIC	2	2	2
38	H18746	Tee - Swivel - (2) 7/8-14 MJIC x (1) 7/8-14 FJIC - Tow Between	1	1	1
39	N29356	Tee - Swivel - (1) 1 1/16-12 FJIC x (2) 1 1/16-12 MJIC - Tow Between	1	1	1
40	K-5806	90 Elbow - Swivel - 7/8-14 MJIC x 7/8-14 FJIC - Tow Between	2	2	2
41	S29967	90 Elbow - Swivel - 9/16-18 MJIC x 9/16-18 FJIC	1	1	1
42	N36597	Hex Bolt - 1/4 x 3/4 Lg - Stainless Steel	4	6	8
43	D-5277	Locknut - 1/4 Serrated	4	6	8
44	N36985	Shutoff Plate - Long	2	3	4
44A	N36995	Shutoff Plate - Short	2	3	4
45	N37339	Socket Head Capscrew - 1/4 x 1/2 Lg	4	6	8

Prior to March 2014 -

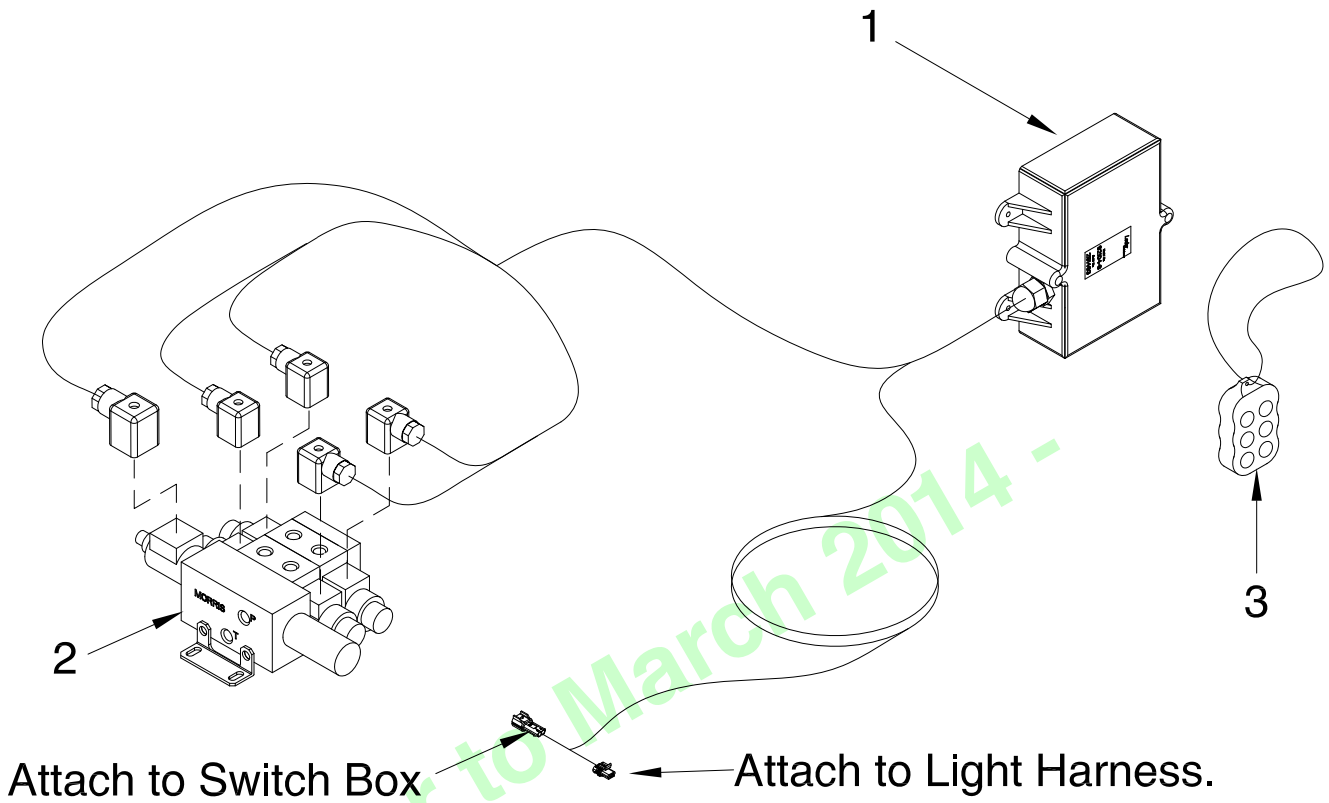

- Prior to March 2014 -

Item	Part No.	Description	Qty
1	N47004	Controller	1
2	N47008	Valve Block	1
3	N48467	Wireless Transmitter	1

Section 16:
Hydraulics - Variable Rate
- May 2018 to Present

- June 2018 to Present -

Section Contents

Hydraulic - Fan VRT 16-2
- 9365, 9450, 9535 Tow Behind 16-2
- 9445, 9550, 9650 Tow Behind 16-5
- 9800 and 91000 Tow Behind 16-8
- 9365, 9450 Tow Between Hydraulic 16-11
- 9445, 9550, 9650 Tow Between Hydraulic 16-14
- 9800 Tow Between Hydraulic 16-17

Dual Fan Hydraulic - Option 16-20
- Tow Behind 16-20
- Tow Between 16-22

Dual Flow Hydraulics - 12” Auger - Option 16-24
- 9800 and 91000 Tow Behind - VR Drive - Single Fan 16-24
- 9800 and 91000 Tow Behind - VR Drive - Dual Fan 16-27
- 9800 Tow Between - VR Drive - Single Fan 16-30
- 9800 Tow Between - VR Drive - Dual Fans 16-33

Dual Flow Hydraulic - Conveyor - Option 16-36
- 9800 and 91000 Tow Behind - VR Drive - Single Fan 16-36
- 9800 and 91000 Tow Behind - VR Drive - Dual Fan 16-39
- 9800 Tow Between - VR Drive - Single Fan 16-42
- 9800 Tow Between - VR Drive - Dual Fan 16-45

Valve Manifold 16-48

Transmission Orbit Motor 16-49

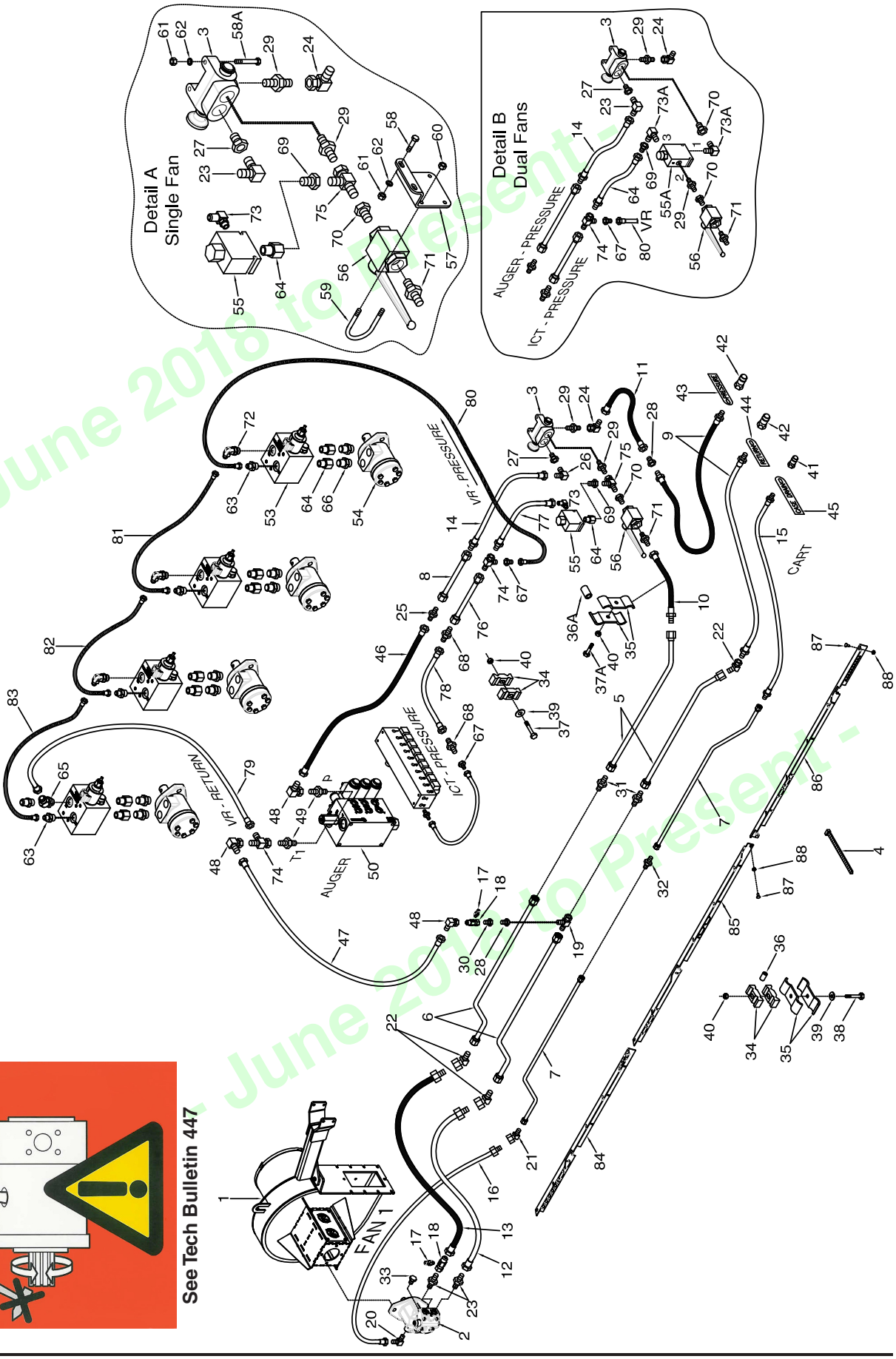

See Tech Bulletin 447

Hydraulic - 9365, 9450, 9535 Tow Behind - Fan VRT

Item	Part No.	Description	Qty
Cart System			
1	* * * * *	Fan - See Section 11	1
2	N53243	Hydraulic Motor W/ Internal Check Valve - Rexroth - See Section 11	1
3	N34506	Selector Valve w/1 1/16-12 FORB - (N31603 - Seal Kit) (C26358 - Knob)	1
4	D-4838	Tie Strap - 14 1/2 Lg	16
4A	D-4951	Tie Strap - 7 3/8 Lg	9
5	N19335	Oil Line - 1 x 92 Lg w/45 Bend w/1 1/16-12 FJIC	2
6	N36833	Oil Line - 1 x 94 Lg w / 6 Offset Bend x 1 5/16-12 FJIC	2
7	N36444	Oil Line - 1/2 x 94 Lg w / 6 Offset Bend x 3/4-16 FJIC	2
8	C-4368	Oil Line - 5/8 x 88 Lg w/ 7/8-14 FJIC	1
9	N37037	Hyd Hose - 3/4 x 270 Lg w/1 5/16-12 MJIC x 1 1/16-12 MORB (Prior to 2021)	2
	N56061	Hyd Hose - 3/4 x 330 Lg w/1 5/16-12 MJIC x 1 1/16-12 MORB (2021 to Present)	2
10	N50900	Hyd Hose - 3/4 x 52 Lg w/1 5/16-12 MJIC x 1 1/16-12 FJIC	1
11	N15991	Hyd Hose - 3/4 x 12 Lg w/1 1/16-12 FJIC	1
12	N53493	Hyd Hose - 3/4 x 48 Lg w/1 5/16-12 MJIC x 7/8-14 FJIC	1
13	N53495	Hyd Hose - 3/4 x 54 Lg w/1 5/16-12 MJIC x 7/8-14 FJIC	1
14	C-4387	Hyd Hose - 1/2 x 36 Lg w/7/8-14 MJIC x 7/8-14 FJIC	1
15	N37180	Hyd Hose - 3/8 x 270 Lg w/3/4-16 MJIC x 7/8-14 MORB (Prior to 2021)	1
	N56063	Hyd Hose - 3/8 x 270 Lg w/3/4-16 MJIC x 7/8-14 MORB (2021 to Present)	1
16	N19475	Hyd Hose - 3/8 x 48 Lg w/9/16-18 FJIC x 3/4-16 MJIC	1
17	N64583	Coupler - Test Port - 7/16-20 (#4) MORB	2
18	K62978	Tee - Gauge Port - 7/8-14 (#10) MJIC x 7/8-14 (#10) FJIC x 7/16-20 (#4) FORB	2
19	N19336	Tee - Swivel - (1) 1 5/16-12 FJIC x (2) 1 5/16-12 MJIC	1
20	N16143	90 Elbow - Swivel - 9/16-18 JIC x 9/16-18 ORB	1
21	N36380	45 Elbow - Swivel - 3/4-16 FJIC x 3/4-16 MJIC	1
22	N36382	45 Elbow - Swivel - 1 5/16-12 FJIC x 1 5/16-12 MJIC	3
23	N34505	Connector - 7/8-14 (#10) MJIC x 7/8-14 (#10) MORB	3
24	N21189	90 Elbow - Swivel - 1 1/16-12 FJIC x 1 1/16-12 MJIC	1
25	C-4469	Connector - 7/8-14 MJIC.	1
26	C15318	90 Elbow - 7/8-14 MJIC x 7/8-14 MORB	1
27	N34499	Connector - 1 1/16-12 MORB x 7/8-14 FORB	1
28	N19338	Connector - 1 1/16-12 MJIC x 1 5/16-12 FJIC	1
29	N15990	Connector 1 1/16-12 MJIC x 1 1/16-12 MORB	2
30	N19337	Connector - 7/8-14 MJIC x 1 1/16-12 FJIC	1
31	N16346	Connector - 1 5/16-12 MJIC	2
32	N25754	Connector - 3/4-16 MJIC	1
33	N16621	Plug - 9/16-18 MORB	1
34	C-4698	Nylon Oil Line Clamp	14
35	D-4808	Oil Line Clamp	10
36	N21632	Oil Line Spacer - 3/8 ID x 9/16 OD x 3/4 Lg	4
36A	D-5011	Oil Line Spacer - .625 ID x 1 OD x 1.562 Lg	1
37	W-479	Hex Bolt - 3/8 x 2 1/4 Lg	3
37A	W-477	Hex Bolt - 3/8 x 1 1/2 Lg	1
38	D-5249	Hex Bolt - 3/8 x 3 1/4 Lg	4
39	W-538	Flatwasher - 3/8	7
40	M-3388	Locknut - 3/8	8
41	N34498	1/2 Male Pioneer Tip - 7/8-14 FORB (Cart - 1)	1
42	N37914	3/4 Male Pioneer Tip - 1 1/16-12 FORB (Cart - 2)	2
	N69669	Kit-Hydraulic Tip Adapter -1/2 Male Pioneer (See Page 14-63 for details)	
43	N34576	Tag - Hose ID - Air Tank - Fan/Auger - PRESSURE	1
44	N34577	Tag - Hose ID - Air Tank - Fan/Auger - RETURN	1
45	N34578	Tag - Hose ID - Air Tank - Fan/Auger - CASE DRAIN	1
Auger System			
46	C-4468	Auger - Hyd Hose - 1/2 x 24 Lg w/7/8-14 FJIC	1
47	C26259	Auger - Hyd Hose - 1/2 x 108 Lg w/7/8-14 FJIC	1
48	K-5806	Auger - 90 Elbow - Swivel - 7/8-14 MJIC x 7/8-14 FJIC	3
49	N47903	Auger - Connector - 7/8-14 MJIC x 1 1/16-12 MORB	2
50	N58555	Auger - Valve Block	1
Decals			
	N19023	Decal - Danger “HOT” (Not Shown)	1
	N36263	Decal - Warning “BURN HAZARD” (Not Shown)	1
	N36443	Decal - Auger “LEVER POSITION” (Not Shown)	1
	N36453	Decal - “AUGER / FAN” (Not Shown)	1
	N49783	Decal - “FAN / CALIBRATION”	1

- Jan 2018 to Present -

Hydraulic - 9365, 9450, 9535 Tow Behind Hydraulic - Fan VRT

Item	Part No.	Description	Qty
VR System			
53	N60258	Manifold Assembly (See page 16-24)	1
54	**N72140**	**Hydraulic Motor - Danfoss OMPX-80 - 2021 to present (See Page 16-49)**	1
	N29319	Hydraulic Motor - DANFOSS DH80 - Prior to 2021 **(See Page 16-49)**	
55	N66211	Valve Flow Control - Single Fan (N29325 Cartridge) (Valve Block Body N67290)	1
55A	N56180	Valve Priority Flow Control - Dual Fans (N59025 Cartridge)	1
56	N37845	Ball Valve (Handle - N66053)	1
57	N37847	Plate	1
58	W-471	Hex Bolt - 5/16 x 1 Lg	2
58A	S-1303	Hex Bolt - 5/16 x 2 Lg - Cart Selector Valve Mount	2
59	N37846	U-Bolt - 1/4 x 2 x 3	2
60	D-5277	Locknut - 1/4 Serrrated	4
61	W-513	Hex Nut - 5/16	4
62	W-522	Lockwasher - 5/16	4
63	C15348	Connector - 9/16-18 (#06) MJIC x 3/4-16 (#08) MORB	4
	N65810	45 Elbow - 9/16-18 (#06) MJIC x 3/4-16 (#08) MORB	
64	N49460	Connector - Swivel - 7/8-14 (#10) FJIC x 3/4-16 (#08) MORB	8
65	C14840	Connector - 7/8-14 (#10) MJIC x 3/4-16 (#08) MORB	1
	C26333	45 Elbow - 7/8-14 (#10) MJIC x 3/4-16 (#08) MORB	
66	N34505	Connector - 7/8-14 (#10) MJIC x 7/8-14 (#10) MORB	8
67	F10384	Connector - 7/8-14 (#10) FJIC x 9/16-18 (#06) MJIC	2
68	C-4469	Connector - 7/8-14 MJIC	2
	C44003	Plug - 7/8-14 MJIC	2
69	N19337	Connector - 7/8-14 MJIC x 1 1/16-12 FJIC	1
70	N37849	Connector - 1 1/16 FJIC x 1 1/16-12 MORB	1
71	N15990	Connector - 1 1/16-12 MJIC x 1 1/16-12 MORB	1
72	N64050	90 Elbow - 9/16-18 (#06) MJIC x 3/4-16 (#08) MORB	3
	N51990	45 Elbow - 3/4-16 MJIC x 7/8-14 MORB may be use this instead????	
73	C24585	90 Elbow - 7/8-14 MJIC x 3/4-16 MORB (Single Fan)	1
73A	N16359	90 Elbow - 1 1/16-12 MJIC x 1 1/16-12 MORB (Dual Fans)	2
74	H18746	Tee - Swivel - (1) - 7/8-14 FJIC x (2) - 7/8-14 MJIC	2
75	N29356	Tee - Swivel - (1) - 1 1/16 FJIC x (2) - 1 1/16 MJIC	1
76	C-4368	Oil Line - 5/8 x 88 Lg w/ 7/8-14 FJIC	1
77	C-4385	Hyd Hose - 1/2 x 24 Lg w/7/8-14 MJIC x 7/8-14 FJIC	1
78	C26344	Hyd Hose - 1/2 x 42 Lg w/7/8-14 FJIC	1
79	K-5685	Hyd Hose - 1/2 x 48 Lg w/7/8-14 FJIC	1
		9535	
80	S42967	Hyd Hose - 3/8 x 30 Lg w/ #6 9/16-18 FJIC - **VR**	1
	S42969	Hyd Hose - 3/8 x 36 Lg - #6 9/16-18 FJIC - **ICT**	
81	S48883	Hyd Hose - 3/8 x 52 Lg - #6 9/16-18 FJIC - **VR**	1
	S47799	Hyd Hose - 3/8 x 60 Lg - #6 9/16-18 FJIC - **ICT**	
82	S42969	Hyd Hose - 3/8 x 36 Lg - #6 9/16-18 FJIC - **VR**	1
	S65380	Hyd Hose - 3/8 x 45 Lg - #6 9/16-18 FJIC - **ICT**	
83	S65380	Hyd Hose - 3/8 x 45 Lg - #6 9/16-18 FJIC - **VR**	1
	S47799	Hyd Hose - 3/8 x 60 Lg - #6 9/16-18 FJIC - **ICT**	
		9450	
80	S48883	Hyd Hose - 3/8 x 52 Lg - #6 9/16-18 FJIC - **VR**	1
	S65380	Hyd Hose - 3/8 x 45 Lg - #6 9/16-18 FJIC - **ICT**	
82	S47799	Hyd Hose - 3/8 x 60 Lg - #6 9/16-18 FJIC - **VR**	1
	S48883	Hyd Hose - 3/8 x 52 Lg - #6 9/16-18 FJIC - **ICT**	
83	S48883	Hyd Hose - 3/8 x 52 Lg - #6 9/16-18 FJIC - **VR**	1
	N53696	Hyd Hose - 3/8 x 66 Lg - #6 9/16-18 FJIC - **ICT**	
		9365	
80	N49110	Hyd Hose - 3/8 x 90 Lg - #6 9/16-18 FJIC - **VR**	1
	N48126	Hyd Hose - 3/8 x 76 Lg - #6 9/16-18 FJIC- **ICT**	
83	N48126	Hyd Hose - 3/8 x 76 Lg - #6 9/16-18 FJIC - **VR**	1
	N48126	Hyd Hose - 3/8 x 76 Lg - #6 9/16-18 FJIC- **ICT**	
84	N59002	Apollo - Rear Template - mount on top of oil lines	1
85	N59003	Apollo - Middle Template - mount on top of oil lines	1
86	N59004	Apollo - Front Template - mount on top of oil lines	1
88	D-5259	Carriage Bolt - 5/16 x 3/4 Lg	5
89	D-5278	Locknut - 5/16 Serrrated Flange	5

- Jan 2018 to Present -

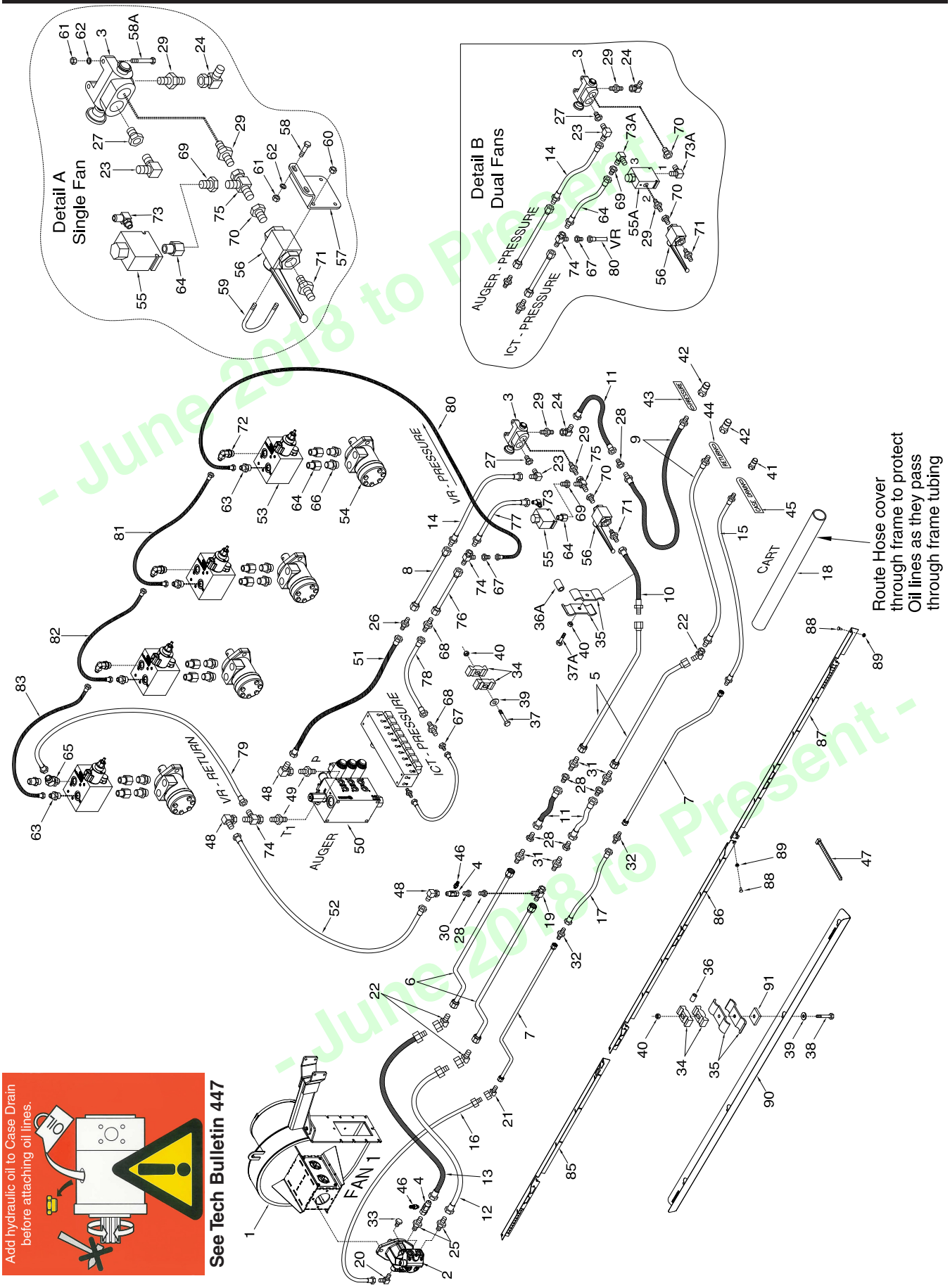

- June 2018 to Present -

Hydraulic - 9445, 9550, 9650 Tow Behind - Fan VRT

Item	Part No.	Description	Qty
Cart System			
1	* * * * *	Fan - See Section 11	1
2	N53243	Hydraulic Motor W/ Internal Check Valve - Rexroth - See Section 11	1
3	N34506	Selector Valve w/1 1/16-12 FORB - (N31603 - Seal Kit) (C26358 - Knob)	1
4	K62978	Tee - Gauge Port - 7/8-14 (#10) MJIC x 7/8-14 (#10) FJIC x 7/16-20 (#4) FORB	2
5	N27601	Oil Line - 1 x 108 Lg - 45 Bend w/1 1/16-12 FJIC	2
6	N36833	Oil Line - 1 x 94 Lg - 6 Offset Bend x 1 5/16-12 FJIC	2
7	N36444	Oil Line - 1/2 x 94 Lg - 6 Offset Bend x 3/4-16 FJIC	2
8	C-4370	Oil Line - 5/8 x 128 Lg - 7/8-14 FJIC	1
9	N56061	Hyd Hose - 3/4 x 330 Lg - 1 5/16-12 MJIC x 1 1/16-12 MORB	2
10	N55197	Hyd Hose - 3/4 x 57 Lg - 1 5/16-12 MJIC x 1 1/16-12 FJIC	1
11	N15991	Hyd Hose - 3/4 x 12 Lg - 1 1/16-12 FJIC	3
12	N53493	Hyd Hose - 3/4 x 48 Lg - 1 5/16-12 MJIC x 7/8-14 FJIC	1
13	N53495	Hyd Hose - 3/4 x 54 Lg - 1 5/16-12 MJIC x 7/8-14 FJIC	1
14	C-4385	Hyd Hose - 1/2 x 24 Lg - 7/8-14 MJIC x 7/8-14 FJIC	1
15	N56063	Hyd Hose - 3/8 x 330 Lg - 3/4-16 MJIC x 7/8-14 MORB	1
16	N19475	Hyd Hose - 3/8 x 48 Lg - 9/16-18 FJIC x 3/4-16 MJIC	1
17	D10821	Hyd Hose - 3/8 x 38 Lg - 3/4-16 FJIC	1
18	N62246	Hydraulic Hose Sleeve - 3” Dia x 36” Lg	1
19	N19336	Tee - Swivel - (1) 1 5/16-12 FJIC x (2) 1 5/16-12 MJIC	1
20	N16143	90 Elbow - Swivel - 9/16-18 JIC x 9/16-18 ORB	1
21	N36380	45 Elbow - Swivel - 3/4-16 FJIC x 3/4-16 MJIC	1
22	N36382	45 Elbow - Swivel - 1 5/16-12 FJIC x 1 5/16-12 MJIC	3
23	C15318	90 Elbow - 7/8-14 MJIC x 7/8-14 MORB	1
24	N21189	90 Elbow - Swivel - 1 1/16-12 FJIC x 1 1/16-12 MJIC	1
25	N34505	Connector - 7/8-14 (#10) MJIC x 7/8-14 (#10) MORB	2
26	C-4469	Connector - 7/8-14 MJIC	1
27	N34499	Connector - 1 1/16-12 MORB x 7/8-14 FORB	1
28	N19338	Connector - 1 1/16-12 MJIC x 1 5/16-12 FJIC	5
29	N15990	Connector 1 1/16-12 MJIC x 1 1/16-12 MORB	2
30	N19337	Connector - 7/8-14 MJIC x 1 1/16-12 FJIC	1
31	N16346	Connector - 1 5/16-12 MJIC	4
32	N25754	Connector - 3/4-16 MJIC	2
33	N16621	Plug - 9/16-18 MORB	1
34	C-4698	Nylon Oil Line Clamp	14
35	D-4808	Oil Line Clamp	10
36	N21632	Oil Line Spacer - 3/8 ID x 9/16 OD x 3/4 Lg	4
36A	D-5011	Oil Line Spacer - .625 ID x 1 OD x 1.562 Lg	1
37	W-479	Hex Bolt - 3/8 x 2 1/4 Lg	3
37A	W-477	Hex Bolt - 3/8 x 1 1/2 Lg	1
38	C-1550	Hex Bolt - 3/8 x 4 Lg	4
39	W-538	Flatwasher - 3/8	7
40	M-3388	Locknut - 3/8	8
41	N34498	1/2 Male Pioneer Tip - 7/8-14 FORB	1
42	N37914	3/4 Male Pioneer Tip - 1 1/16-12 FORB	2
	N69669	Kit-Hydraulic Tip Adapter -1/2 Male Pioneer (See Page 14-63 for details)	
43	N34576	Tag - Hose ID - Air Tank - Fan/Auger - PRESSURE	1
44	N34577	Tag - Hose ID - Air Tank - Fan/Auger - RETURN	1
45	N34578	Tag - Hose ID - Air Tank - Fan/Auger - CASE DRAIN	1
46	N64583	Coupler - Test Port - 7/16-20 (#4) MORB	2
Auger System			
47	D-4838	Tie Strap - 14 1/2 Lg	16
	D-4951	Tie Strap - 7 3/8 Lg	9
48	K-5806	Auger - 90 Elbow - Swivel - 7/8-14 MJIC x 7/8-14 FJIC	3
49	N47903	Auger - Connector - 7/8-14 MJIC x 1 1/16-12 MORB	2
50	N58555	Auger - Valve Block	1
51	C26344	Auger - Hyd Hose - 1/2 x 42 Lg - 7/8-14 FJIC	1
52	C26259	Auger - Hyd Hose - 1/2 x 108 Lg - 7/8-14 FJIC	1

- Serial Num 2018 to Present -

Hydraulic - 9445, 9550, 9650 Tow Behind Hydraulic - Fan VRT

Item	Part No.	Description	Qty
VR System			
53	N60258	Manifold Assembly (See page 16-24)	1
54	**N72140**	**Hydraulic Motor - Danfoss OMPX-80 - 2021 to present (See Page 16-49)**	1
	N29319	Hydraulic Motor - DANFOSS DH80 - Prior to 2021 **(See Page 16-49)**	
55	N66211	Valve Flow Control - Single Fan (N29325 Cartridge) (Valve Block Body N67290)	1
55A	N56180	Valve Priority Flow Control - Dual Fans (N59025 Cartridge)	1
56	N37845	Ball Valve (Handle - N66053)	1
57	N37847	Plate	1
58	W-471	Hex Bolt - 5/16 x 1 Lg	2
58A	S-1303	Hex Bolt - 5/16 x 2 Lg - Cart Selector Valve Mount	2
59	N37846	U-Bolt - 1/4 x 2 x 3	2
60	D-5277	Locknut - 1/4 Serrrated	4
61	W-513	Hex Nut - 5/16	4
62	W-522	Lockwasher - 5/16	4
63	C15348	Connector - 9/16-18 (#06) MJIC x 3/4-16 (#08) MORB	4
	N65810	45 Elbow - 9/16-18 (#06) MJIC x 3/4-16 (#08) MORB	
64	N49460	Connector - Swivel - 7/8-14 (#10) FJIC x 3/4-16 (#08) MORB	8
65	C14840	Connector - 7/8-14 (#10) MJIC x 3/4-16 (#08) MORB	1
	C26333	45 Elbow - 7/8-14 (#10) MJIC x 3/4-16 (#08) MORB	
66	N34505	Connector - 7/8-14 (#10) MJIC x 7/8-14 (#10) MORB	8
67	F10384	Connector - 7/8-14 (#10) FJIC x 9/16-18 (#06) MJIC	2
68	C-4469	Connector - 7/8-14 MJIC	2
	C44003	Plug - 7/8-14 MJIC	2
69	N19337	Connector - 7/8-14 MJIC x 1 1/16-12 FJIC	1
70	N37849	Connector - 1 1/16 FJIC x 1 1/16-12 MORB	1
71	N15990	Connector - 1 1/16-12 MJIC x 1 1/16-12 MORB	1
72	N64050	90 Elbow - 9/16-18 (#06) MJIC x 3/4-16 (#08) MORB	3
	N51990	45 Elbow - 3/4-16 MJIC x 7/8-14 MORB may be use this instead????	
73	C24585	90 Elbow - 7/8-14 MJIC x 3/4-16 MORB (Single Fan)	1
73A	N16359	90 Elbow - 1 1/16-12 MJIC x 1 1/16-12 MORB (Dual Fans)	2
74	H18746	Tee - Swivel - (1) - 7/8-14 FJIC x (2) - 7/8-14 MJIC	2
75	N29356	Tee - Swivel - (1) - 1 1/16 FJIC x (2) - 1 1/16 MJIC	1
76	C-4370	Oil Line - 5/8 x 128 Lg w/ 7/8-14 FJIC	1
77	C-4385	Hyd Hose - 1/2 x 24 Lg w/7/8-14 MJIC x 7/8-14 FJIC	1
78	C26344	Hyd Hose - 1/2 x 42 Lg w/7/8-14 FJIC	1
79	K-5685	Hyd Hose - 1/2 x 48 Lg w/7/8-14 FJIC	1
		9650	
80	S42969	Hyd Hose - 3/8 x 36 Lg w/ #6 9/16-18 FJIC	1
81	S65380	Hyd Hose - 3/8 x 45 Lg - #6 9/16-18 FJIC	1
82	S65380	Hyd Hose - 3/8 x 45 Lg - #6 9/16-18 FJIC	1
83	S47799	Hyd Hose - 3/8 x 60 Lg - #6 9/16-18 FJIC	
		9550	
80	N48126	Hyd Hose - 3/8 x 76 Lg - 9/16-18 FJIC	1
82	S65380	Hyd Hose - 3/8 x 45 Lg - #6 9/16-18 FJIC	1
83	S47799	Hyd Hose - 3/8 x 60 Lg - #6 9/16-18 FJIC	
		9445	
80	S65380	Hyd Hose - 3/8 x 45 Lg - #6 9/16-18 FJIC	1
83	S47799	Hyd Hose - 3/8 x 60 Lg - #6 9/16-18 FJIC	1
85	N58940	Apollo - Rear Template	1
86	N58941	Apollo - Middle Template	1
87	N58942	Apollo - Front Template	1
88	D-5259	Carriage Bolt - 5/16 x 3/4 Lg	5
89	D-5278	Locknut - 5/16 Serrrated Flange	5
90	N53086	Panel - Oil Line Cover - 2 1/4 tall - Single Fan	2
	N53009	Panel - Oil Line Cover - 3 3/4 tall - Dual Fan	2
91	S31476	Plate Spacer - 1/2	4
Decals			
	N19023	Decal - Danger "HOT" (Not Shown)	1
	N36263	Decal - Warning "BURN HAZARD" (Not Shown)	1
	N36443	Decal - Auger "LEVER POSITION" (Not Shown)	1
	N36453	Decal - "AUGER / FAN" (Not Shown)	1
	N49783	Decal - "FAN / CALIBRATION"	1

- Jan 2018 to Present -
- June 2018 to Present -

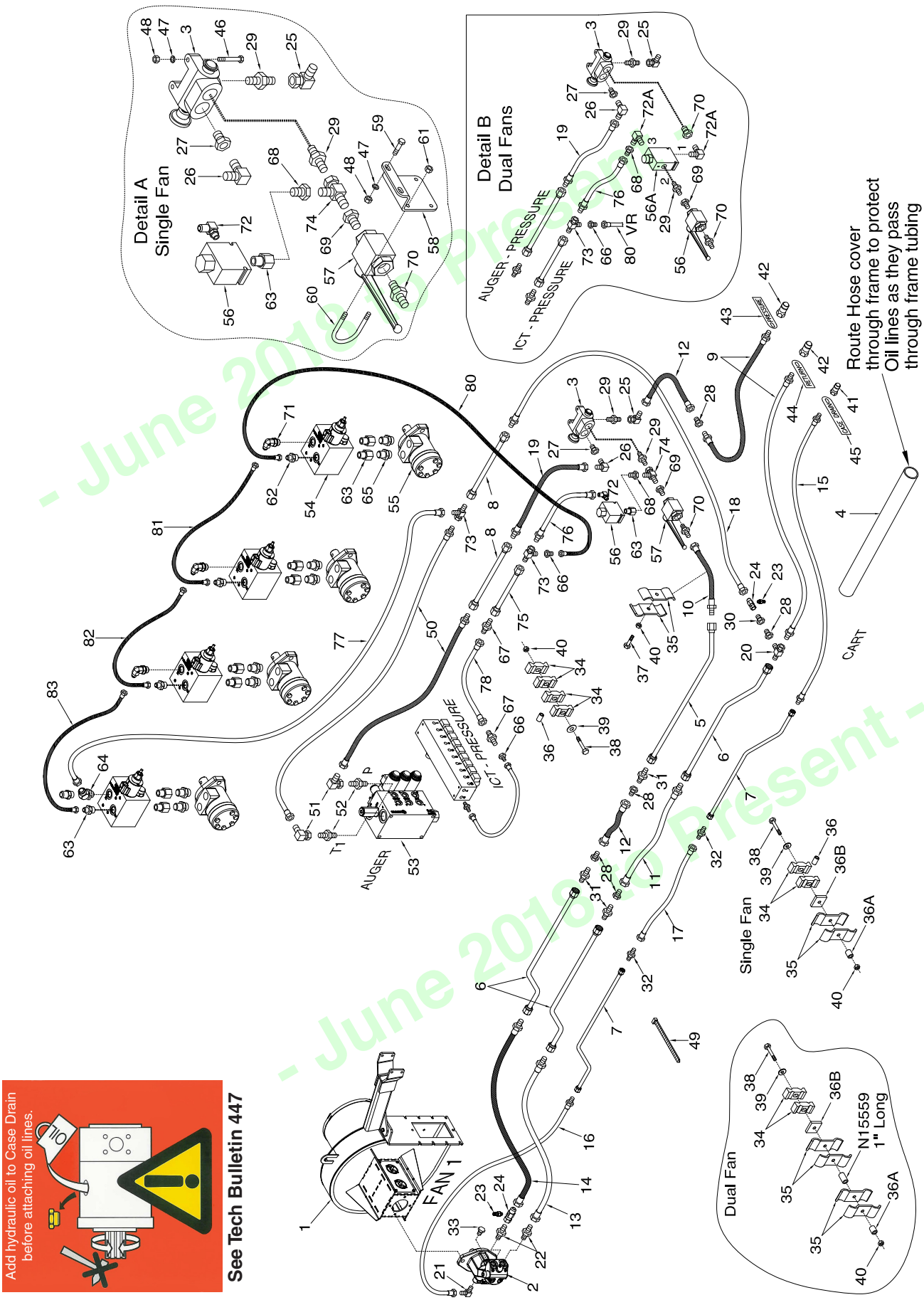

- June 2019 to Present -

Hydraulic - 9800 and 91000 Tow Behind - Fan VRT

Item	Part No.	Description	Qty
Cart System			
1	* * * * *	Fan - See Section 11	1
2	N53243	Hydraulic Motor W/ Internal Check Valve - Rexroth - See Section 11	1
3	N34506	Selector Valve w/1 1/16-12 FORB - (N31603 - Seal Kit) (C26358 - Knob)	1
4	N62246	Hydraulic Hose Sleeve - 3” Dia x 36” Lg	1
5	N27601	Oil Line - 1 x 108 Lg w/45 Bend w/1 1/16-12 FJIC	2
6	N36833	Oil Line - 1 x 94 Lg w / 6 Offset Bend x 1 5/16-12 FJIC	2
7	N36444	Oil Line - 1/2 x 94 Lg w / 6 Offset Bend x 3/4-16 FJIC	2
8	C-4370	Oil Line - 5/8 x 128 Lg w/ 7/8-14 FJIC	2
9	N56061	Hyd Hose - 3/4 x 330 Lg w/1 5/16-12 MJIC x 1 1/16-12 MORB	2
10	N55197	Hyd Hose - 3/4 x 57 Lg w/1 5/16-12 MJIC x 1 1/16-12 FJIC	1
11	N19434	Hyd Hose - 3/4 x 35 Lg w/1 5/16-12 MJIC x 1 1/16-12 FJIC	1
12	N15991	Hyd Hose - 3/4 x 12 Lg w/1 1/16-12 FJIC	2
13	N53493	Hyd Hose - 3/4 x 48 Lg w/1 5/16-12 MJIC x 7/8-14 FJIC	1
14	N53495	Hyd Hose - 3/4 x 54 Lg w/1 5/16-12 MJIC x 7/8-14 FJIC	1
15	N56063	Hyd Hose - 3/8 x 330 Lg w/3/4-16 MJIC x 7/8-14 MORB	1
16	N19475	Hyd Hose - 3/8 x 48 Lg w/9/16-18 FJIC x 3/4-16 MJIC	1
17	D10821	Hyd Hose - 3/8 x 38 Lg w/3/4-16 FJIC	1
18	C15310	Hyd Hose - 1/2 x 72 Lg w/7/8-14 MJIC x 7/8-14 FJIC	1
19	C-4385	Hyd Hose - 1/2 x 24 Lg w/7/8-14 MJIC x 7/8-14 FJIC	1
20	N19336	Tee - Swivel - (1) 1 5/16-12 FJIC x (2) 1 5/16-12 MJIC	1
21	N16143	90 Elbow - Swivel - 9/16-18 JIC x 9/16-18 ORB	1
22	N34505	Connector - 7/8-14 (#10) MJIC x 7/8-14 (#10) MORB	3
23	N64583	Coupler - Test Port - 7/16-20 (#4) MORB	3
24	K62978	Tee - Gauge Port - 7/8-14 (#10) MJIC x 7/8-14 (#10) FJIC x 7/16-20 (#4) FORB	3
25	N21189	90 Elbow - Swivel - 1 1/16-12 FJIC x 1 1/16-12 MJIC	1
26	C15318	90 Elbow - 7/8-14 MJIC x 7/8-14 MORB	1
27	N34499	Connector - 1 1/16-12 MORB x 7/8-14 FORB	1
28	N19338	Connector - 1 1/16-12 MJIC x 1 5/16-12 FJIC	5
29	N15990	Connector 1 1/16-12 MJIC x 1 1/16-12 MORB	2
30	N19337	Connector - 7/8-14 MJIC x 1 1/16-12 FJIC	1
31	N16346	Connector - 1 5/16-12 MJIC	4
32	N25754	Connector - 3/4-16 MJIC	2
33	N16621	Plug - 9/16-18 MORB	1
34	C-4698	Nylon Oil Line Clamp	14
35	D-4808	Oil Line Clamp	10
36	N21632	Oil Line Spacer - 3/8 ID x 9/16 OD x 3/4 Lg	4
36A	N16257	Oil Line Spacer - 3/8 ID x 5/8 OD x 5/8 Lg	4
36B	S31476	Plate Spacer - 1/2	4
37	W-477	Hex Bolt - 3/8 x 1 1/2 Lg.	1
38	C-1550	Hex Bolt - 3/8 x 4 Lg.	7
39	W-538	Flatwasher - 3/8	7
40	M-3388	Locknut - 3/8	8
41	N34498	1/2 Male Pioneer Tip - 7/8-14 FORB (Cart - 1)	2
42	N37914	3/4 Male Pioneer Tip - 1 1/16-12 FORB (Cart - 2)	4
	N69669	Kit-Hydraulic Tip Adapter -1/2 Male Pioneer (See Page 14-63 for details)	
43	N34576	Tag - Hose ID - Air Tank - Fan/Auger - PRESSURE	3
44	N34577	Tag - Hose ID - Air Tank - Fan/Auger - RETURN	3
45	N34578	Tag - Hose ID - Air Tank - Fan/Auger - CASE DRAIN	3
46	S-1303	Hex Bolt - 5/16 x 2 Lg - Cart Selector Valve Mount	2
47	W-522	Lockwasher - 5/16 (Cart - 2) (VR - 2)	4
48	W-513	Hex Nut - 5/16 (Cart - 2) (VR - 2)	4
Auger System			
49	D-4838	Tie Strap - 14 1/2 Lg.	16
	D-4951	Tie Strap - 7 3/8 Lg	9
50	C-4387	Auger - Hyd Hose - 1/2 x 36 Lg w/7/8-14 MJIC x 7/8-14 FJIC	2
51	K-5806	Auger - 90 Elbow - Swivel - 7/8-14 MJIC x 7/8-14 FJIC	3
52	N47903	Auger - Connector - 7/8-14 MJIC x 1 1/16-12 MORB	2
53	N58555	Auger - Valve Block	1

- Manufactured 1/2016 to Present -

Hydraulic - 9800 and 91000 Tow Behind Hydraulic - Fan VRT

Item	Part No.	Description	Qty
VR System			
54	N60258	Manifold Assembly (See page 16-24)	1
55	**N72140**	**Hydraulic Motor - Danfoss OMPX-80 - 2021 to present (See Page 16-49)**	4
	N29319	Hydraulic Motor - DANFOSS DH80 - Prior to 2021 **(See Page 16-49)**	
56	N66211	Valve Flow Control - Single Fan (N29325 Cartridge) (Valve Block Body N67290)	1
56A	N56180	Valve Priority Flow Control - Dual Fans (N59025 Cartridge)	1
57	N37845	Ball Valve (Handle - N66053)	1
58	N37847	Plate	1
59	W-471	Hex Bolt - 5/16 x 1 Lg	2
60	N37846	U-Bolt - 1/4 x 2 x 3	2
61	D-5277	Locknut - 1/4 Serrrated	4
62	C15348	Connector - 9/16-18 (#06) MJIC x 3/4-16 (#08) MORB	4
	N65810	45 Elbow - 9/16-18 (#06) MJIC x 3/4-16 (#08) MORB	
63	N49460	Connector - Swivel - 7/8-14 (#10) FJIC x 3/4-16 (#08) MORB	8
64	C14840	Connector - 7/8-14 (#10) MJIC x 3/4-16 (#08) MORB	3
	C26333	45 Elbow - 7/8-14 (#10) MJIC x 3/4-16 (#08) MORB	
65	N34505	Connector - 7/8-14 (#10) MJIC x 7/8-14 (#10) MORB	8
66	F10384	Connector - 7/8-14 (#10) FJIC x 9/16-18 (#06) MJIC	2
67	C-4469	Connector - 7/8-14 MJIC	1
	C44003	Plug - 7/8-14 MJIC	2
68	N19337	Connector - 7/8-14 MJIC x 1 1/16-12 FJIC	1
69	N37849	Connector - 1 1/16 FJIC x 1 1/16-12 MORB	1
70	N15990	Connector - 1 1/16-12 MJIC x 1 1/16-12 MORB	1
71	N64050	90 Elbow - 9/16-18 (#06) MJIC x 3/4-16 (#08) MORB	3
	N51990	45 Elbow - 3/4-16 MJIC x 7/8-14 MORB may be use this instead????	
72	C24585	90 Elbow - 7/8-14 MJIC x 3/4-16 MORB (Single Fan)	1
72A	N16359	90 Elbow - 1 1/16-12 MJIC x 1 1/16-12 MORB (Dual Fans)	2
73	H18746	Tee - Swivel - (1) - 7/8-14 FJIC x (2) - 7/8-14 MJIC	2
74	N29356	Tee - Swivel - (1) - 1 1/16 FJIC x (2) - 1 1/16 MJIC	1
75	C-4370	Oil Line - 5/8 x 128 Lg w/ 7/8-14 FJIC	1
76	C-4385	Hyd Hose - 1/2 x 24 Lg w/7/8-14 MJIC x 7/8-14 FJIC	1
77	C-4387	Auger - Hyd Hose - 1/2 x 36 Lg w/7/8-14 MJIC x 7/8-14 FJIC	1
78	K-5685	Hyd Hose - 1/2 x 48 Lg w/7/8-14 FJIC	1
		9800 and 91000	
80	S42969	Hyd Hose - 3/8 x 36 Lg w/ #6 9/16-18 FJIC	1
81	N53696	Hyd Hose - 3/8 x 66 Lg - #6 9/16-18 FJIC	1
82	S65380	Hyd Hose - 3/8 x 45 Lg - #6 9/16-18 FJIC	1
83	N53696	Hyd Hose - 3/8 x 66 Lg - #6 9/16-18 FJIC	1
		9680	
80	N48126	Hyd Hose - 3/8 x 76 Lg - 9/16-18 FJIC	1
82	S65380	Hyd Hose - 3/8 x 45 Lg - #6 9/16-18 FJIC	1
83	N53696	Hyd Hose - 3/8 x 66 Lg - #6 9/16-18 FJIC	1
		9555	
80	S65380	Hyd Hose - 3/8 x 45 Lg - #6 9/16-18 FJIC - **VR**	1
	S42969	Hyd Hose - 3/8 x 36 Lg w/ #6 9/16-18 FJIC - **ICT**	1
83	N53696	Hyd Hose - 3/8 x 66 Lg - #6 9/16-18 FJIC	1
	N19023	Decal - Danger “HOT” (Not Shown)	1
	N36263	Decal - Warning “BURN HAZARD” (Not Shown)	1
	N36443	Decal - Auger “LEVER POSITION” (Not Shown)	1
	N36453	Decal - “AUGER / FAN” (Not Shown)	1
	N49783	Decal - “FAN / CALIBRATION”	1

- June 2018 to Present -

Hydraulic - Fan VRT
9365, 9450 Tow Between Hydraulic

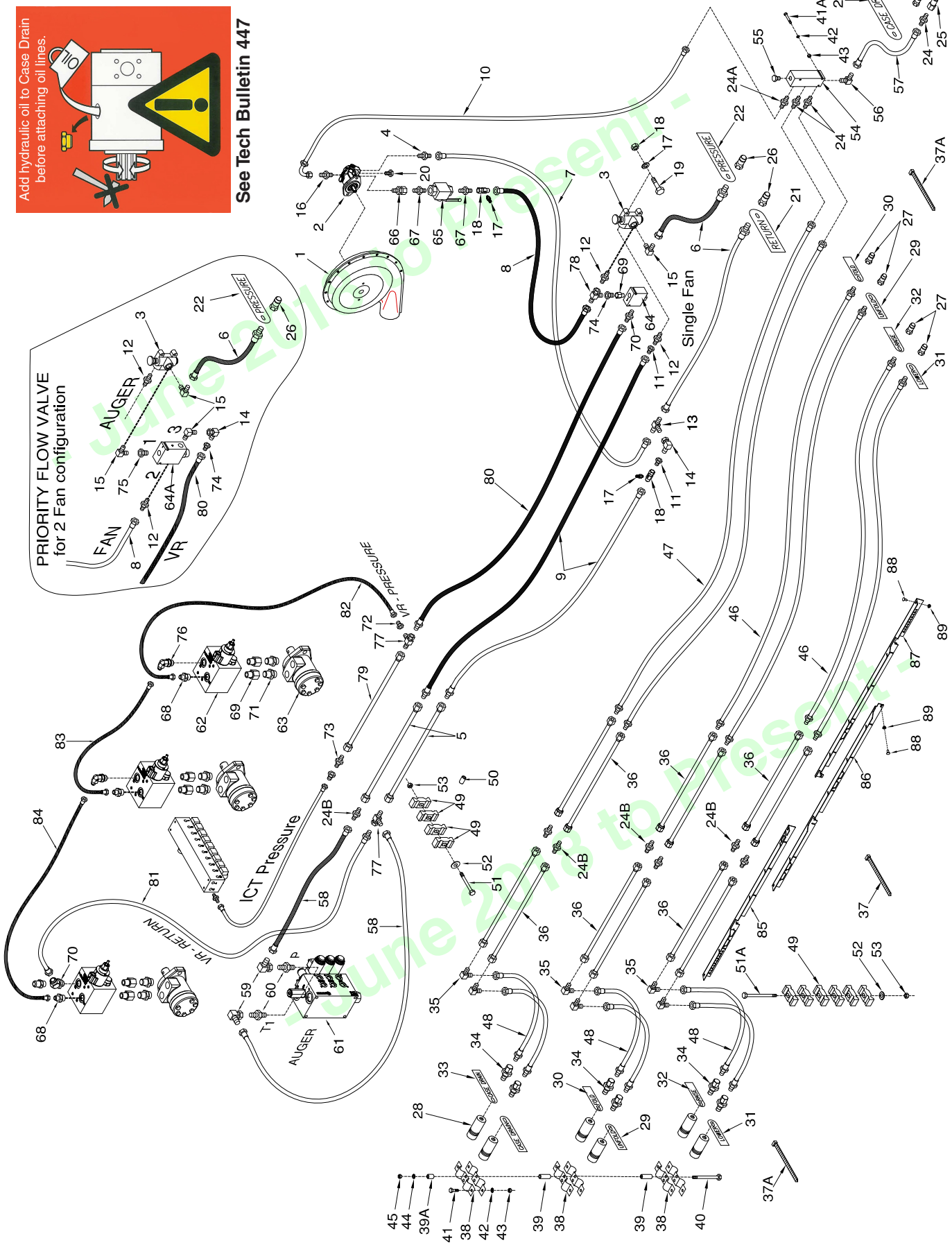

- June 2018 to Present -

9365, 9450 Tow Between Hydraulic Drive - Fan VRT

Item	Part No.	Description	Qty
1	* * * * *	Fan - See Section 11	1
2	N53243	Hydraulic Motor W/ Internal Check Valve - Rexroth - See Section 11	2
3	N37514	Selector Valve (Seal Kit # N31603) (Knob # C26358)	1
4	N34505	Connector - 7/8-14 (#10) MJIC x 7/8-14 (#10) MORB	1
5	C-4368	Oil Line - 5/8 x 88 Lg w/ 7/8-14 FJIC	2
6	N37038	Hyd Hose - 3/4 x 84 Lg w/ 1 1/16-12 MORB x 1 1/16-12 FJIC	2
7	N53494	Hyd Hose - 3/4 x 66 - 1 1/16-12 FJIC x 7/8-14 FJIC swivel end	1
8	N53496	Hyd Hose - 3/4 x 54 - 1 1/16-12 FJIC x 7/8-14 FJIC swivel end	1
9	N55169	Hyd Hose - 1/2 x 108 Lg w/7/8-14 MJIC x 7/8-14 FJIC	2
10	N37421	Hyd Hose - 3/8 x 108 - 3/4-16 FJIC x 9/16-18 FJIC w/90 Bend	1
11	N19337	Connector - 7/8-14 MJIC x 1 1/16-12 FJIC	2
12	N15990	Connector - 1 1/16-12 MJIC x 1 1/16-12 MORB	2
13	N19549	Tee - 1 1/16 MJIC	1
14	N21189	90 Elbow - Swivel - 1 1/16-12 FJIC x 1 1/16-12 MJIC	1
15	N16359	90 Elbow - 1 1/16-12 MJIC x 1 1/16-12 MORB	1
16	N29358	Connector - 9/16-18 MJIC x 9/16-18 MORB	1
17	N64583	Coupler - Test Port - 7/16-20 (#4) MORB	2
18	K62978	Tee - Gauge Port - 7/8-14 (#10) MJIC x 7/8-14 (#10) FJIC x 7/16-20 (#4) FORB	2
19	S-1303	Hex Bolt - 5/16 x 2 Lg	2
20	N16621	Plug - 9/16-18 MORB	1
21	N34577	Tag - Hose ID Tank - Fan/Auger - RETURN	1
22	N34576	Tag - Hose ID - Tank - Fan/Auger - PRESSURE	1
23	N34578	Tag - Hose ID - Tank - Fan/Auger - CASE DRAIN	1
24	C14840	Connector - 3/4-16 MORB x 7/8-14 MJIC	1
24A	C15330	Connector - 3/4-16 MORB x 3/4-16 MJIC (10178)	1
24B	C-4469	Connector - 7/8-14 (#10) MJIC	8
25	K50834	3/8 Flat Face Tip - 3/4-16 FORB	1
26	N37914	3/4 Male Pioneer Tip - 1 1/16-12 FORB	2
	N69669	Kit-Hydraulic Tip Adapter -1/2 Male Pioneer (See Page 14-63 for details)	
27	N34498	1/2 Male Pioneer Tip - 7/8-14 FORB	7
28	N34488	1/2 Female Pioneer Coupler - 7/8-14 FORB	6
29	S37662	Tag - Hose ID - Wing Lift - UNFOLD	2
30	S37661	Tag - Hose ID - Wing Lift - FOLD	2
31	S37663	Tag - Hose ID - Depth Control - LOWER	2
32	S37664	Tag - Hose ID - Depth Control - RAISE	2
33	S44456	Tag - Hose ID - Case Drain	2
34	N34620	Connector - 7/8-14 FJIC x 7/8-14 MORB	6
35	H24393	90 Elbow - 7/8-14 MJIC	7
36	N37348	Oil Line - 5/8 x 84 Lg w/ 7/8-14 FJIC	12
37	D-4838	Tie Strap - 14 1/2 Lg	15
37A	D-4951	Tie Strap - 7 3/8 Lg	15
37B	S13336	Tie Strap - 24 Lg	3
38	N16608	Coupler Clamp - Female Pioneer	6
39	N19458	Spacer Bushing - 0.540 OD x 2	6
39A	N19155	Spacer Bushing - 0.540 OD x 1/2	2
40	S13337	Hex Bolt - 5/16 x 6 Lg	2
41	W-469	Hex Bolt - 1/4 x 3/4 Lg	6
41A	C15319	Hex Bolt - 1/4 x 2 1/2 Lg	3
42	W-521	Lockwasher - 1/4	6
43	W-512	Hex Nut - 1/4	6
44	W-522	Lockwasher - 5/16	4
45	W-513	Hex Nut - 5/16	4
46	N37403	Hyd Hose - 1/2 x 192 Lg - 7/8-14 MJIC x 7/8-14 MORB	4
47	N55169	Hyd Hose - 1/2 x 108 Lg - 7/8-14 MJIC x 7/8-14 FJIC Swivel	2
48	C-4387	Hyd Hose - 1/2 x 36 Lg - 7/8-14 MJIC x 7/8-14 FJIC Swivel	6
49	C-4698	Nylon Oil Line Clamp (VRT-4) (STD-4) (Tillage-24)	32
50	N16257	Oil Line Spacer - 3/8 ID x 5/8 OD x 5/8 Lg (VRT)	2
51	C-1550	Hex Bolt - 3/8 x 4 Lg (VRT) (Standard would use 2 1/4 Lg Bolt)	2
51A	C-3664	Hex Bolt - 3/8 x 5 1/2 Lg	4
52	W-538	Flatwasher - 3/8	6

- June 2019 to Present -

9365, 9450 Tow Between Hydraulic Drive - Fan VRT

Item	Part No.	Description	Qty
53	M-3388	Locknut - 3/8	6
54	N58670	Case Drain Header	1
55	C28505	Plug - 3/4-16 MORB	1
56	N34646	90 Elbow - 7/8-14 MJIC x 1 1/16-12 MORB	1
57	F-4565	Hyd Hose - 1/2 x 60 Lg w/7/8-14 FJIC	1
Auger System			
58	C-4468	Auger - Hyd Hose - 1/2 x 24 Lg w/7/8-14 FJIC	2
59	K-5806	Auger - 90 Elbow - Swivel - 7/8-14 MJIC x 7/8-14 FJIC	2
60	N47903	Auger - Connector - 7/8-14 MJIC x 1 1/16-12 MORB	2
61	N58555	Auger - Valve Block	1
VR System			
62	N60258	Manifold Assembly (See page 16-24)	1
63	**N72140**	**Hydraulic Motor - Danfoss OMPX-80 - 2021 to present (See Page 16-49)**	1
	N29319	Hydraulic Motor - DANFOSS DH80 - Prior to 2021 **(See Page 16-49)**	
64	N66211	Valve Flow Control - Single Fan (N29325 Cartridge) (Valve Block Body N67290)	1
64A	N56180	Valve Priority Flow Control - Dual Fans (N59025 Cartridge)	1
65	N37845	Ball Valve (Handle - N66053)	1
66	N34620	Connector - Swivel - 7/8-14 FJIC x 7/8-14 MORB	1
67	N47903	Connector - 7/8-14 MJIC x 1 1/16-12 MORB	2
68	C15348	Connector - 9/16-18 (#06) MJIC x 3/4-16 (#08) MORB	4
	N65810	45 Elbow - 9/16-18 (#06) MJIC x 3/4-16 (#08) MORB	
69	N49460	Connector - Swivel - 7/8-14 (#10) FJIC x 3/4-16 (#08) MORB	8
70	C14840	Connector - 7/8-14 (#10) MJIC x 3/4-16 (#08) MORB	1
	C26333	45 Elbow - 7/8-14 (#10) MJIC x 3/4-16 (#08) MORB	
71	N34505	Connector - 7/8-14 (#10) MJIC x 7/8-14 (#10) MORB	8
72	F10384	Connector - 7/8-14 (#10) FJIC x 9/16-18 (#06) MJIC	2
73	C-4469	Connector - 7/8-14 MJIC	2
	C44003	Plug - 7/8-14 MJIC	2
74	N19337	Connector - 7/8-14 MJIC x 1 1/16-12 FJIC	1
75	N37849	Connector - 1 1/16 FJIC x 1 1/16-12 MORB	1
76	N64050	90 Elbow - 9/16-18 (#06) MJIC x 3/4-16 (#08) MORB	3
	N51990	45 Elbow - 3/4-16 MJIC x 7/8-14 MORB may be use this instead????	
77	H18746	Tee - Swivel - (1) - 7/8-14 FJIC x (2) - 7/8-14 MJIC	2
78	N29356	Tee - Swivel - (1) - 1 1/16 FJIC x (2) - 1 1/16 MJIC	1
79	C-4368	Oil Line - 5/8 x 88 Lg w/ 7/8-14 FJIC	1
80	N55169	Hyd Hose - 1/2 x 108 Lg w/7/8-14 MJIC x 7/8-14 FJIC	1
81	C-4387	Hyd Hose - 1/2 x 36 Lg w/7/8-14 MJIC x 7/8-14 FJIC	2
		9450	
82	S48883	Hyd Hose - 3/8 x 52 Lg - #6 9/16-18 FJIC - **VR**	1
	S65380	Hyd Hose - 3/8 x 45 Lg - #6 9/16-18 FJIC - **ICT**	
83	S47799	Hyd Hose - 3/8 x 60 Lg - #6 9/16-18 FJIC - **VR**	1
	S48883	Hyd Hose - 3/8 x 52 Lg - #6 9/16-18 FJIC - **ICT**	
84	S48883	Hyd Hose - 3/8 x 52 Lg - #6 9/16-18 FJIC - **VR**	1
	N53696	Hyd Hose - 3/8 x 66 Lg - #6 9/16-18 FJIC - **ICT**	
		9365	
82	N49110	Hyd Hose - 3/8 x 90 Lg - #6 9/16-18 FJIC - **VR**	1
	N48126	Hyd Hose - 3/8 x 76 Lg - #6 9/16-18 FJIC- **ICT**	
84	N48126	Hyd Hose - 3/8 x 76 Lg - #6 9/16-18 FJIC - **VR**	1
	N48126	Hyd Hose - 3/8 x 76 Lg - #6 9/16-18 FJIC- **ICT**	
85	N59002	Apollo - Rear Template - mount on top of oil lines	1
86	N59003	Apollo - Middle Template - mount on top of oil lines	1
87	N59004	Apollo - Front Template - mount on top of oil lines	1
88	D-5259	Carriage Bolt - 5/16 x 3/4 Lg	5
89	D-5278	Locknut - 5/16 Serrrated Flange	5
	N19023	Decal - Danger "HOT" (Not Shown)	1
	N36263	Decal - Warning "BURN HAZARD" (Not Shown)	1
	N36443	Decal - Auger "LEVER POSITION" (Not Shown)	1
	N19031	Decal - "AUGER / FAN" (Not Shown)	1
	N49783	Decal - "CALIBRAITON / FAN" (Not Shown)	1

- 2021 to Present -
- 2018 to Present -

Hydraulic - Fan VRT
9445, 9550, 9650 Tow Between Hydraulic

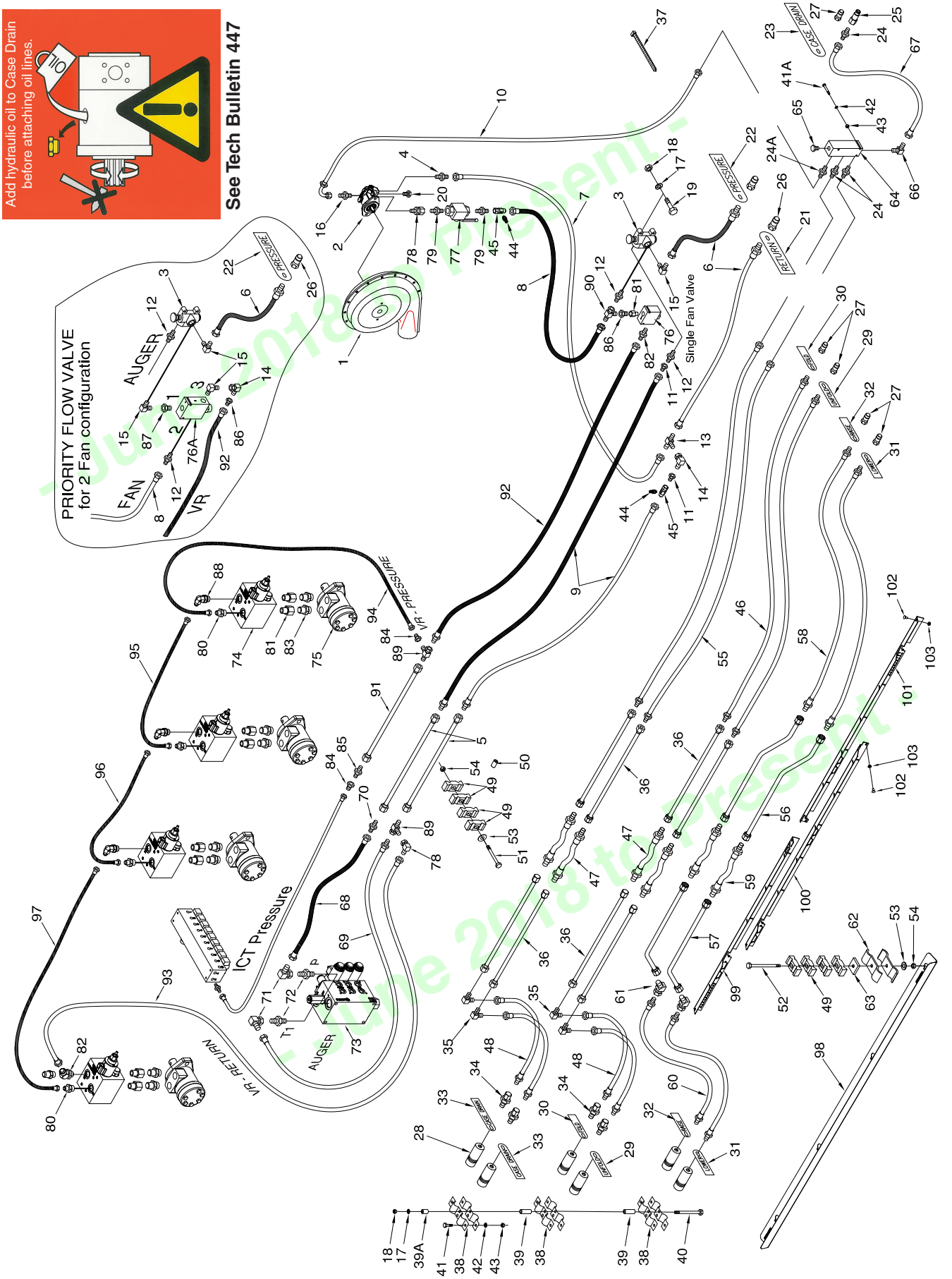

9445, 9550, 9650 Tow Between Hydraulic Drive - Fan VRT

Item	Part No.	Description	Qty
1	* * * * *	Fan - See Section 11	1
2	N53243	Hydraulic Motor W/ Internal Check Valve - Rexroth - See Section 11	2
3	N37514	Selector Valve (Seal Kit # N31603) (Knob # C26358)	1
4	N34505	Connector - 7/8-14 (#10) MJIC x 7/8-14 (#10) MORB	1
5	C-4370	Oil Line - 5/8 x 128 Lg w/ 7/8-14 FJIC	2
6	N37038	Hyd Hose - 3/4 x 84 Lg w/ 1 1/16-12 MORB x 1 1/16-12 FJIC	2
7	N53494	Hyd Hose - 3/4 x 66 - 1 1/16-12 FJIC x 7/8-14 FJIC swivel end	1
8	N53496	Hyd Hose - 3/4 x 54 - 1 1/16-12 FJIC x 7/8-14 FJIC swivel end	1
9	N55169	Hyd Hose - 1/2 x 108 Lg w/7/8-14 MJIC x 7/8-14 FJIC swivel end	2
10	N37421	Hyd Hose - 3/8 x 108 - 3/4-16 FJIC x 9/16-18 FJIC w/90 Bend	1
11	N19337	Connector - 7/8-14 MJIC x 1 1/16-12 FJIC	2
12	N15990	Connector - 1 1/16-12 MJIC x 1 1/16-12 MORB	2
13	N19549	Tee - 1 1/16 MJIC	1
14	N21189	90 Elbow - Swivel - 1 1/16-12 FJIC x 1 1/16-12 MJIC	1
15	N16359	90 Elbow - 1 1/16-12 MJIC x 1 1/16-12 MORB	1
16	N29358	Connector - 9/16-18 MJIC x 9/16-18 MORB	1
17	W-522	Lockwasher - 5/16	4
18	W-513	Hex Nut - 5/16	4
19	S-1303	Hex Bolt - 5/16 x 2 Lg	2
20	N16621	Plug - 9/16-18 MORB	1
21	N34577	Tag - Hose ID Tank - Fan/Auger - RETURN	1
22	N34576	Tag - Hose ID - Tank - Fan/Auger - PRESSURE	1
23	N34578	Tag - Hose ID - Tank - Fan/Auger - CASE DRAIN	1
24	C14840	Connector - 3/4-16 MORB x 7/8-14 MJIC	1
24A	C15330	Connector - 3/4-16 MORB x 3/4-16 MJIC (10178)	1
25	K50834	3/8 Flat Face Tip - 3/4-16 FORB	1
26	N37914	3/4 Male Pioneer Tip - 1 1/16-12 FORB	2
	N69669	Kit-Hydraulic Tip Adapter -1/2 Male Pioneer (See Page 14-63 for details)	
27	N34498	1/2 Male Pioneer Tip - 7/8-14 FORB	7
28	N34488	1/2 Female Pioneer Coupler - 7/8-14 FORB	6
29	S37662	Tag - Hose ID - Wing Lift - UNFOLD	2
30	S37661	Tag - Hose ID - Wing Lift - FOLD	2
31	S37663	Tag - Hose ID - Depth Control - LOWER	2
32	S37664	Tag - Hose ID - Depth Control - RAISE	2
33	S44456	Tag - Hose ID - Case Drain	2
34	N34620	Connector - 7/8-14 FJIC x 7/8-14 MORB	4
35	H24393	90 Elbow - 7/8-14 MJIC	6
36	N37348	Oil Line - 5/8 x 84 Lg w/ 7/8-14 FJIC	8
37	D-4838	Tie Strap - 14 1/2 Lg	15
37A	D-4951	Tie Strap - 7 3/8 Lg	15
37B	S13336	Tie Strap - 24 Lg	3
38	N16608	Coupler Clamp - Female Pioneer	6
39	N19458	Spacer Bushing - 0.540 OD x 2	6
39A	N19155	Spacer Bushing - 0.540 OD x 1/2	2
40	S13337	Hex Bolt - 5/16 x 6 Lg	2
41	W-469	Hex Bolt - 1/4 x 3/4 Lg	6
41A	C15319	Hex Bolt - 1/4 x 2 1/2 Lg	3
42	W-521	Lockwasher - 1/4	6
43	W-512	Hex Nut - 1/4	6
44	N64583	Coupler - Test Port - 7/16-20 (#4) MORB	2
45	K62978	Tee - Gauge Port - 7/8-14 (#10) MJIC x 7/8-14 (#10) FJIC x 7/16-20 (#4) FORB	2
46	N37403	Hyd Hose - 1/2 x 192 Lg - 7/8-14 MJIC x 7/8-14 MORB	2
47	C-4386	Hyd Hose - 1/2 x 36 Lg w/7/8-14 MJIC	4
48	C-4387	Hyd Hose - 1/2 x 36 Lg w/7/8-14 MJIC x 7/8-14 FJIC Swivel	4
49	C-4698	Nylon Oil Line Clamp (VRT-4) (STD-4) (Tillage-24)	28
50	N16257	Oil Line Spacer - 3/8 ID x 5/8 OD x 5/8 Lg (VRT)	3
51	C-1550	Hex Bolt - 3/8 x 4 Lg (VRT) (Standard would use 2 1/4 Lg Bolt)	3
52	C-3664	Hex Bolt - 3/8 x 5 1/2 Lg	4
53	W-538	Flatwasher - 3/8	7
54	M-3388	Locknut - 3/8	7
55	S22403	Hyd Hose - 1/2 x 120 Lg - 7/8-14 MJIC x 7/8-14 FJIC	2
56	N36833	Oil Line - 1 x 94 Lg w/ 1 5/16-12 FJIC (#16)	2
57	N27601	Oil Line - 1 x 108 Lg w/45 Bend w/1 1/16-12 FJIC	2
58	N58170	Hyd Hose - 3/4 x 192 Lg - 1 5/16-12 MJIC (#16) x 7/8-14 MORB (#10)	2
59	N58167	Hyd Hose - 3/4 x 12 Lg - 1 5/16-12 MJIC Ends	2
60	N58169	Hyd Hose - 3/4 x 36 Lg - 1 5/16 -12 MJIC (#16) x 7/8 -14 MORB	2
61	N36382	45 Elbow - 1 5/16-12 MJIC x 1 5/16-12 FJIC Swivel	2

- Illustrated Parts Manual - 2018 to Present -

9445, 9550, 9650 Tow Between Hydraulic Drive - Fan VRT

Item	Part No.	Description	Qty
62	D-4808	Oil Line Clamp	8
63	S31476	Plate Spacer - 1 1/2 x 1 1/2 x 1/2 thick	4
64	N58670	Case Drain Header	1
65	C28505	Plug - 3/4-16 MORB	1
66	N34646	90 Elbow - 7/8-14 MJIC x 1 1/16-12 MORB	1
67	F-4565	Hyd Hose - 1/2 x 60 Lg w/7/8-14 FJIC	1
Auger System			
68	C26344	Auger - Hyd Hose - 1/2 x 42 Lg w/7/8-14 FJIC	1
69	C-4388	Auger - Hyd Hose - 1/2 x 48 Lg w/ 7/8-14 MJIC x 7/8-14 FJIC	1
70	C-4469	Connector - 7/8-14 MJIC	1
71	K-5806	Auger - 90 Elbow - Swivel - 7/8-14 MJIC x 7/8-14 FJIC	2
72	N47903	Auger - Connector - 7/8-14 MJIC x 1 1/16-12 MORB	2
73	N58555	Auger - Valve Block	1
VR System			
74	N60258	Manifold Assembly (See page 16-24)	1
75	**N72140**	**Hydraulic Motor - Danfoss OMPX-80 - 2021 to present (See Page 16-49)**	1
	N29319	Hydraulic Motor - DANFOSS DH80 - Prior to 2021 **(See Page 16-49)**	
76	N66211	Valve Flow Control - Single Fan (N29325 Cartridge) (Valve Block Body N67290)	1
76A	N56180	Valve Priority Flow Control - Dual Fans (N59025 Cartridge)	1
77	N37845	Ball Valve (Handle - N66053)	1
78	N34620	Connector - Swivel - 7/8-14 FJIC x 7/8-14 MORB	1
79	N47903	Connector - 7/8-14 MJIC x 1 1/16-12 MORB	2
80	C15348	Connector - 9/16-18 (#06) MJIC x 3/4-16 (#08) MORB	4
	N65810	45 Elbow - 9/16-18 (#06) MJIC x 3/4-16 (#08) MORB	
81	N49460	Connector - Swivel - 7/8-14 (#10) FJIC x 3/4-16 (#08) MORB	8
82	C14840	Connector - 7/8-14 (#10) MJIC x 3/4-16 (#08) MORB	1
	C26333	45 Elbow - 7/8-14 (#10) MJIC x 3/4-16 (#08) MORB	
83	N34505	Connector - 7/8-14 (#10) MJIC x 7/8-14 (#10) MORB	8
84	F10384	Connector - 7/8-14 (#10) FJIC x 9/16-18 (#06) MJIC	2
85	C-4469	Connector - 7/8-14 MJIC	2
	C44003	Plug - 7/8-14 MJIC	2
86	N19337	Connector - 7/8-14 MJIC x 1 1/16-12 FJIC	1
87	N37849	Connector - 1 1/16 FJIC x 1 1/16-12 MORB	1
88	N64050	90 Elbow - 9/16-18 (#06) MJIC x 3/4-16 (#08) MORB	3
	N51990	45 Elbow - 3/4-16 MJIC x 7/8-14 MORB may be use this instead????	
89	H18746	Tee - Swivel - (1) - 7/8-14 FJIC x (2) - 7/8-14 MJIC	2
90	N29356	Tee - Swivel - (1) - 1 1/16 FJIC x (2) - 1 1/16 MJIC	1
91	C-4370	Oil Line - 5/8 x 128 Lg w/ 7/8-14 FJIC	1
92	N55169	Hyd Hose - 1/2 x 108 Lg w/7/8-14 MJIC x 7/8-14 FJIC	1
93	K-5685	Hyd Hose - 1/2 x 48 Lg w/7/8-14 FJIC	1
		9650	
94	S42969	Hyd Hose - 3/8 x 36 Lg w/ #6 9/16-18 FJIC	1
95	S47799	Hyd Hose - 3/8 x 60 Lg - #6 9/16-18 FJIC	1
96	S65380	Hyd Hose - 3/8 x 45 Lg - #6 9/16-18 FJIC	1
97	S47799	Hyd Hose - 3/8 x 60 Lg - #6 9/16-18 FJIC	1
		9550	
94	N48126	Hyd Hose - 3/8 x 76 Lg - 9/16-18 FJIC	1
96	S65380	Hyd Hose - 3/8 x 45 Lg - #6 9/16-18 FJIC	1
97	S47799	Hyd Hose - 3/8 x 60 Lg - #6 9/16-18 FJIC	
		9445	
94	S65380	Hyd Hose - 3/8 x 45 Lg - #6 9/16-18 FJIC	1
97	S47799	Hyd Hose - 3/8 x 60 Lg - #6 9/16-18 FJIC	1
98	N53009	Panel - Oil Line Cover	2
99	N58940	Apollo - Rear Template	1
100	N58941	Apollo - Middle Template	1
101	N58942	Apollo - Front Template	1
102	D-5259	Carriage Bolt - 5/16 x 3/4 Lg	5
103	D-5278	Locknut - 5/16 Serrrated Flange	5
	N19023	Decal - Danger “HOT” (Not Shown)	1
	N36263	Decal - Warning “BURN HAZARD” (Not Shown)	1
	N36443	Decal - Auger “LEVER POSITION” (Not Shown)	1
	N19031	Decal - “AUGER / FAN” (Not Shown)	1
	N49783	Decal - “CALIBRAITON / FAN” (Not Shown)	1

- June 2018 to Present -

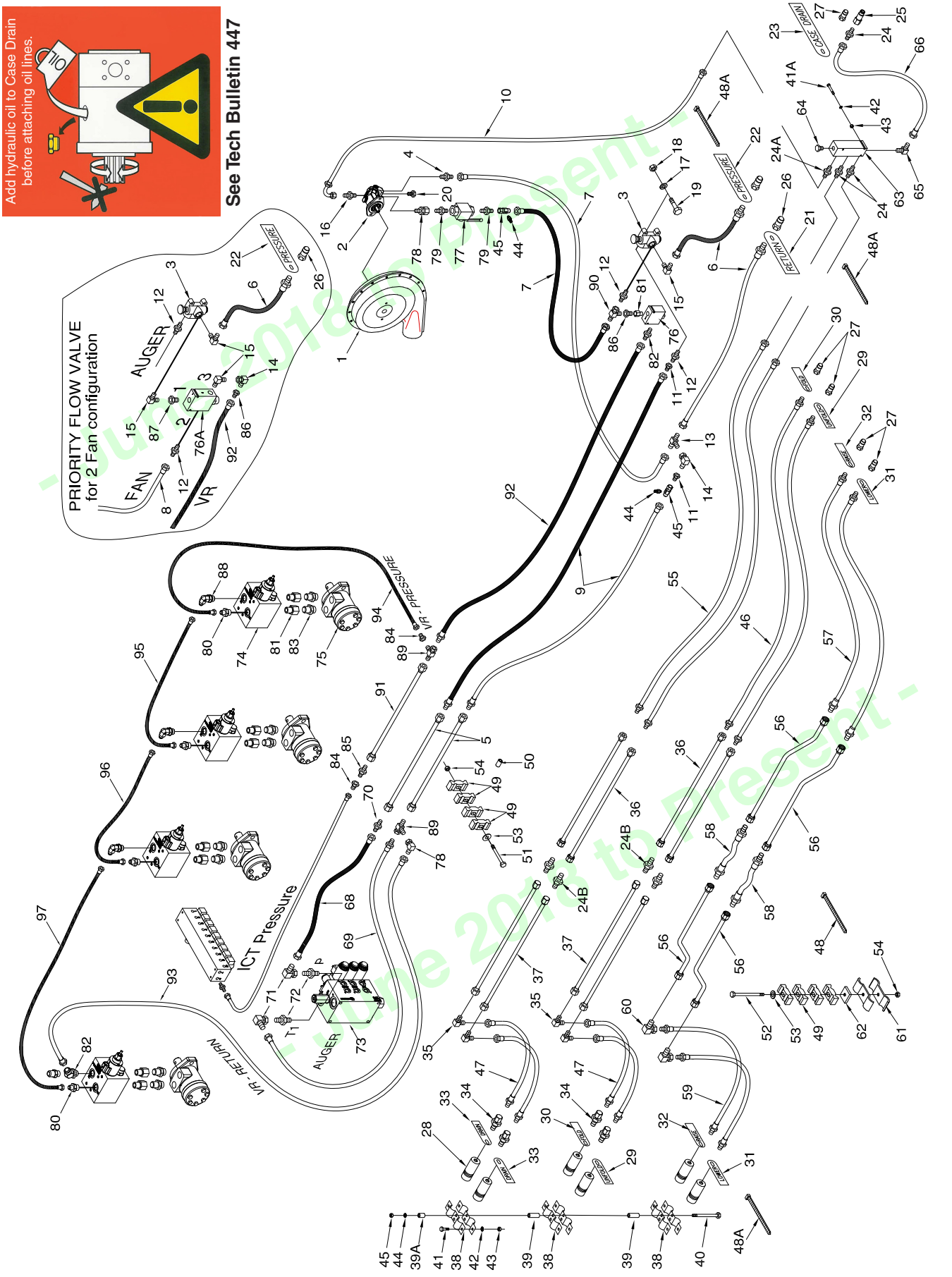
Add hydraulic oil to Case Drain before attaching oil lines.
See Tech Bulletin 447
PRIORITY FLOW VALVE
for 2 Fan configuration
FAN
VR
AUGER
ICT Pressure
VR - RETURN
VR - PRESSURE
CASE DRAIN
PRESSURE
RETURN
- June 2018 to Present -

9800 Tow Between Hydraulic Drive - Fan VRT

Item	Part No.	Description	Qty
1	* * * * *	Fan - See Section 11	1
2	N53243	Hydraulic Motor W/ Internal Check Valve - Rexroth - See Section 11	2
3	N37514	Selector Valve (Seal Kit # N31603) (Knob # C26358)	1
4	N34505	Connector - 7/8-14 (#10) MJIC x 7/8-14 (#10) MORB	1
5	C-4370	Oil Line - 5/8 x 128 Lg w/ 7/8-14 FJIC	2
6	N37038	Hyd Hose - 3/4 x 84 Lg w/ 1 1/16-12 MORB x 1 1/16-12 FJIC	2
7	N53494	Hyd Hose - 3/4 x 66 - 1 1/16-12 FJIC x 7/8-14 FJIC swivel end	2
8	* * * * *		
9	N55169	Hyd Hose - 1/2 x 108 Lg w/7/8-14 MJIC x 7/8-14 FJIC swivel end	2
10	N37421	Hyd Hose - 3/8 x 108 - 3/4-16 FJIC x 9/16-18 FJIC w/90 Bend	1
11	N19337	Connector - 7/8-14 MJIC x 1 1/16-12 FJIC	2
12	N15990	Connector - 1 1/16-12 MJIC x 1 1/16-12 MORB	2
13	N19549	Tee - 1 1/16 MJIC	1
14	N21189	90 Elbow - Swivel - 1 1/16-12 FJIC x 1 1/16-12 MJIC	1
15	N16359	90 Elbow - 1 1/16-12 MJIC x 1 1/16-12 MORB	1
16	N29358	Connector - 9/16-18 MJIC x 9/16-18 MORB	1
17	W-522	Lockwasher - 5/16	2
18	W-513	Hex Nut - 5/16	4
19	S-1303	Hex Bolt - 5/16 x 2 Lg	4
20	N16621	Plug - 9/16-18 MORB	1
21	N34577	Tag - Hose ID Tank - Fan/Auger - RETURN	1
22	N34576	Tag - Hose ID - Tank - Fan/Auger - PRESSURE	1
23	N34578	Tag - Hose ID - Tank - Fan/Auger - CASE DRAIN	1
24	C14840	Connector - 3/4-16 MORB x 7/8-14 MJIC	3
24A	C15330	Connector - 3/4-16 MORB x 3/4-16 MJIC (10178)	1
24B	C-4469	Connector - 7/8-14 (#10) MJIC	4
25	K50834	3/8 Flat Face Tip - 3/4-16 FORB	1
26	N37914	3/4 Male Pioneer Tip - 1 1/16-12 FORB	2
	N69669	Kit-Hydraulic Tip Adapter -1/2 Male Pioneer (See Page 14-63 for details)	
27	N34498	1/2 Male Pioneer Tip - 7/8-14 FORB	7
28	N34488	1/2 Female Pioneer Coupler - 7/8-14 FORB	6
29	S37662	Tag - Hose ID - Wing Lift - UNFOLD	2
30	S37661	Tag - Hose ID - Wing Lift - FOLD	2
31	S37663	Tag - Hose ID - Depth Control - LOWER	2
32	S37664	Tag - Hose ID - Depth Control - RAISE	2
33	S44456	Tag - Hose ID - Case Drain	2
34	N34620	Connector - 7/8-14 FJIC x 7/8-14 MORB	4
35	H24393	90 Elbow - 7/8-14 MJIC	6
36	N37348	Oil Line - 5/8 x 84 Lg w/ 7/8-14 FJIC	4
37	C-4370	Oil Line - 5/8 x 128 Lg w/ 7/8-14 FJIC	4
38	N16608	Coupler Clamp - Female Pioneer	6
39	N19458	Spacer Bushing - 0.540 OD x 2	6
39A	N19155	Spacer Bushing - 0.540 OD x 1/2	2
40	S13337	Hex Bolt - 5/16 x 6 Lg	2
41	W-469	Hex Bolt - 1/4 x 3/4 Lg	6
41A	C15319	Hex Bolt - 1/4 x 2 1/2 Lg	3
42	W-521	Lockwasher - 1/4	9
43	W-512	Hex Nut - 1/4	9
44	N64583	Coupler - Test Port - 7/16-20 (#4) MORB	3
45	K62978	Tee - Gauge Port - 7/8-14 (#10) MJIC x 7/8-14 (#10) FJIC x 7/16-20 (#4) FORB	3
46	N37403	Hyd Hose - 1/2 x 192 Lg - 7/8-14 MJIC x 7/8-14 MORB	2
47	C-4387	Hyd Hose - 1/2 x 36 Lg w/7/8-14 MJIC x 7/8-14 FJIC Swivel	4
48	D-4838	Tie Strap - 14 1/2 Lg	15
48A	D-4951	Tie Strap - 7 3/8 Lg	15
48B	S13336	Tie Strap - 24 Lg	3
49	C-4698	Nylon Oil Line Clamp (VRT-4) (STD-4) (Tillage-24)	36
50	N16257	Oil Line Spacer - 3/8 ID x 5/8 OD x 5/8 Lg (VRT)	3
51	C-1550	Hex Bolt - 3/8 x 4 Lg (VRT) (Standard would use 2 1/4 Lg Bolt)	3
52	C-3664	Hex Bolt - 3/8 x 5 1/2 Lg	4
53	W-538	Flatwasher - 3/8	7
54	M-3388	Locknut - 3/8	7
55	S22403	Hyd Hose - 1/2 x 120 Lg - 7/8-14 MJIC x 7/8-14 FJIC	2
56	N36833	Oil Line - 1 x 94 Lg w/ 1 5/16-12 FJIC (#16)	8
57	N58170	Hyd Hose - 3/4 x 192 Lg - 1 5/16-12 MJIC (#16) x 7/8-14 MORB (#10)	2
58	N58168	Hyd Hose - 3/4 x 36 Lg - 1 5/16-12 MJIC Ends	2
59	N58169	Hyd Hose - 3/4 x 36 Lg - 1 5/16 -12 MJIC (#16) x 7/8 -14 MORB	2

- Jun 2018 to Present -

9800 Tow Between Hydraulic Drive - Fan VRT

Item	Part No.	Description	Qty
60	N58171	90 Elbow - 1 5/16-12 MJIC x 1 5/16-12 FJIC Swivel	2
61	D-4808	Oil Line Clamp	8
62	S31476	Plate Spacer - 1 1/2 x 1 1/2 x 1/2 thick	4
63	N58670	Case Drain Header	1
64	C28505	Plug - 3/4-16 MORB	1
65	N34646	90 Elbow - 7/8-14 MJIC x 1 1/16-12 MORB	1
66	F-4565	Hyd Hose - 1/2 x 60 Lg w/7/8-14 FJIC	1
Auger System			
68	C26344	Auger - Hyd Hose - 1/2 x 42 Lg w/7/8-14 FJIC	1
69	C-4388	Auger - Hyd Hose - 1/2 x 48 Lg w/ 7/8-14 MJIC x 7/8-14 FJIC	1
70	C-4469	Connector - 7/8-14 MJIC	1
71	K-5806	Auger - 90 Elbow - Swivel - 7/8-14 MJIC x 7/8-14 FJIC	2
72	N47903	Auger - Connector - 7/8-14 MJIC x 1 1/16-12 MORB	2
73	N58555	Auger - Valve Block	1
VR System			
74	N60258	Manifold Assembly (See page 16-24)	1
75	**N72140**	**Hydraulic Motor - Danfoss OMPX-80 - 2021 to present (See Page 16-49)**	1
	N29319	Hydraulic Motor - DANFOSS DH80 - Prior to 2021 **(See Page 16-49)**	
76	N66211	Valve Flow Control - Single Fan (N29325 Cartridge) (Valve Block Body N67290)	1
76A	N56180	Valve Priority Flow Control - Dual Fans (N59025 Cartridge)	1
77	N37845	Ball Valve (Handle - N66053)	1
78	N34620	Connector - Swivel - 7/8-14 FJIC x 7/8-14 MORB	1
79	N47903	Connector - 7/8-14 MJIC x 1 1/16-12 MORB	2
80	C15348	Connector - 9/16-18 (#06) MJIC x 3/4-16 (#08) MORB	4
	N65810	45 Elbow - 9/16-18 (#06) MJIC x 3/4-16 (#08) MORB	
81	N49460	Connector - Swivel - 7/8-14 (#10) FJIC x 3/4-16 (#08) MORB	8
82	C14840	Connector - 7/8-14 (#10) MJIC x 3/4-16 (#08) MORB	1
	C26333	45 Elbow - 7/8-14 (#10) MJIC x 3/4-16 (#08) MORB	
83	N34505	Connector - 7/8-14 (#10) MJIC x 7/8-14 (#10) MORB	8
84	F10384	Connector - 7/8-14 (#10) FJIC x 9/16-18 (#06) MJIC	2
85	C-4469	Connector - 7/8-14 MJIC	2
	C44003	Plug - 7/8-14 MJIC	2
86	N19337	Connector - 7/8-14 MJIC x 1 1/16-12 FJIC	1
87	N37849	Connector - 1 1/16 FJIC x 1 1/16-12 MORB	1
88	N64050	90 Elbow - 9/16-18 (#06) MJIC x 3/4-16 (#08) MORB	3
	N51990	45 Elbow - 3/4-16 MJIC x 7/8-14 MORB	
89	H18746	Tee - Swivel - (1) - 7/8-14 FJIC x (2) - 7/8-14 MJIC	2
90	N29356	Tee - Swivel - (1) - 1 1/16 FJIC x (2) - 1 1/16 MJIC	1
91	C-4370	Oil Line - 5/8 x 128 Lg w/ 7/8-14 FJIC	1
92	N55169	Hyd Hose - 1/2 x 108 Lg - 7/8-14 MJIC x 7/8-14 FJIC	1
93	K-5685	Hyd Hose - 1/2 x 48 Lg - 7/8-14 FJIC	1
		9800	
94	S42969	Hyd Hose - 3/8 x 36 Lg w/ #6 9/16-18 FJIC	1
95	N53696	Hyd Hose - 3/8 x 66 Lg - #6 9/16-18 FJIC	1
96	S65380	Hyd Hose - 3/8 x 45 Lg - #6 9/16-18 FJIC	1
97	N53696	Hyd Hose - 3/8 x 66 Lg - #6 9/16-18 FJIC	1
		9680	
94	N53696	Hyd Hose - 3/8 x 66 Lg - #6 9/16-18 FJIC	1
96	N53696	Hyd Hose - 3/8 x 66 Lg - #6 9/16-18 FJIC	1
97	N53696	Hyd Hose - 3/8 x 66 Lg - #6 9/16-18 FJIC	1
		9555	
94	S65380	Hyd Hose - 3/8 x 45 Lg - #6 9/16-18 FJIC - VR	1
	S42969	Hyd Hose - 3/8 x 36 Lg w/ #6 9/16-18 FJIC - ICT	1
97	N53696	Hyd Hose - 3/8 x 66 Lg - #6 9/16-18 FJIC	1
	N19023	Decal - Danger “HOT” (Not Shown)	1
	N36263	Decal - Warning “BURN HAZARD” (Not Shown)	1
	N36443	Decal - Auger “LEVER POSITION” (Not Shown)	1
	N19031	Decal - “AUGER / FAN” (Not Shown)	1
	N49783	Decal - “CALIBRAITON / FAN” (Not Shown)	1

- June 2018 to Present -

Dual Fan Hydraulic - Option
Tow Behind

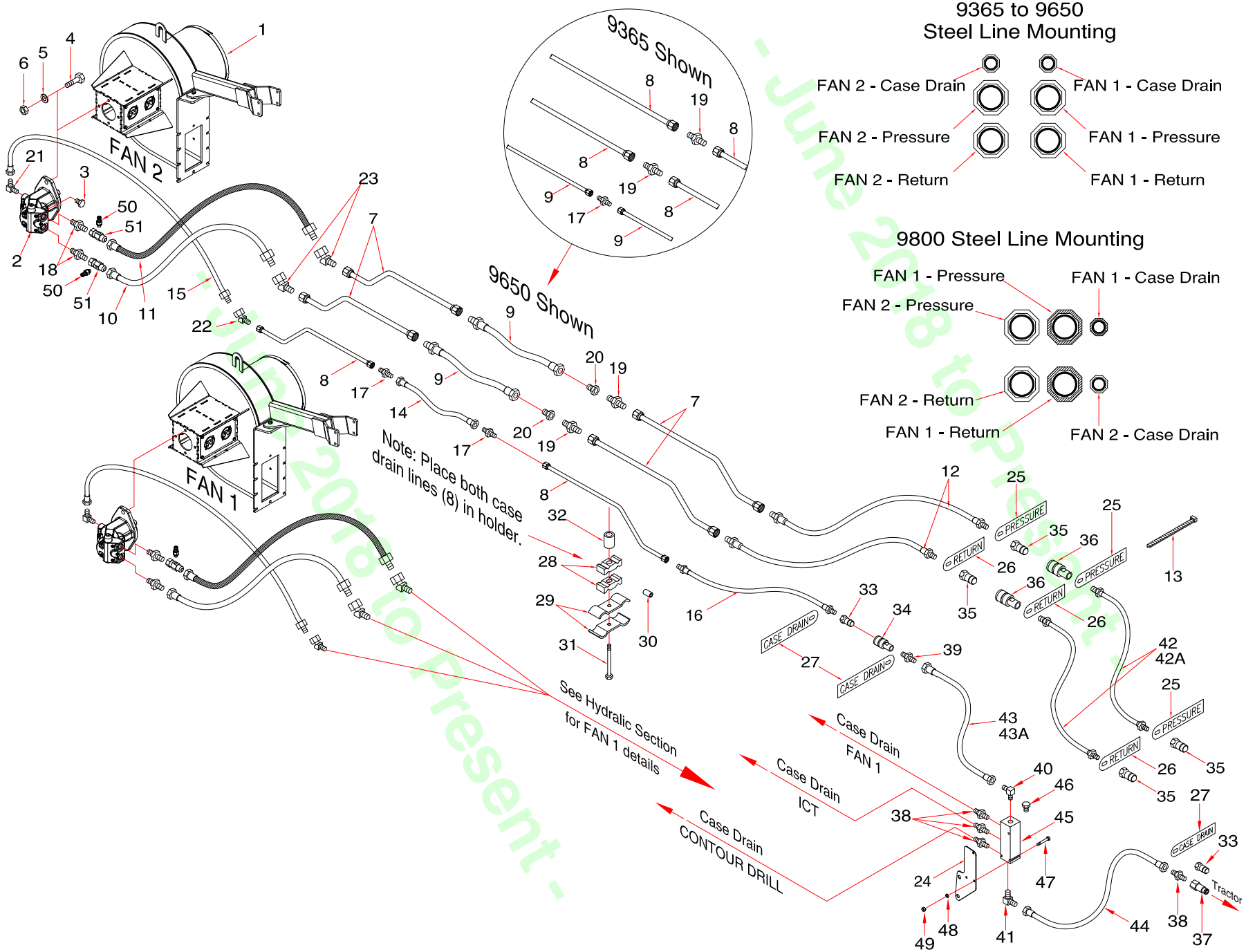

- June 2018 to Present -

Dual Fan - Tow Behind

Item	Part No.	Description	Qty
1	N37826	Fan - See Section 11	1
2	N53243	Hydraulic Motor W/ Internal Check Valve - Rexroth - See Section 11	1
3	N16621	Plug - 9/16-18 MORB	1
4	S-1189	Hex Bolt - 1/2 x 1 3/4 Lg	2
5	W-525	Lockwasher - 1/2	6
6	W-516	Hex Nut - 1/2	6
7	N36833	Oil Line - 1 x 94 Lg w / 6 Offset Bend x 1 5/16-12 FJIC	4
8	N36444	Oil Line - 1/2 x 94 Lg w / 6 Offset Bend x 3/4-16 FJIC	2
9	N19434	Hyd Hose - 3/4 x 35 Lg w/1 5/16-12 MJIC x 1 1/16-12 FJIC - (9445, 9550, 9650) (9800)	4
10	N53247	Hyd Hose - 3/4 x 72 Lg w/1 5/16-12 MJIC x 7/8-14 FJIC	1
11	N53249	Hyd Hose - 3/4 x 78 Lg w/1 5/16-12 MJIC x 7/8-14 FJIC	1
12	N37037	Hyd Hose - 3/4 x 270 Lg w/1 5/16-12 MJIC x 1 1/16-12 MORB - (9365, 9450, 9535)	2
	N56061	Hyd Hose - 3/4 x 330 Lg w/1 5/16-12 MJIC x 1 1/16-12 MORB - (9445, 9550, 9650)	2
	N56061	Hyd Hose - 3/4 x 330 Lg w/1 5/16-12 MJIC x 1 1/16-12 MORB - (9800 and 91000)	2
13	D-4951	Nylon Tie Strap - 7 3/8 Lg	12
14	D10821	Hyd Hose - 3/8 x 38 Lg w/3/4-16 FJIC - (9445, 9550, 9650) (9800)	1
15	N53492	Hyd Hose - 3/8 x 72 Lg w/9/16-18 FJIC x 3/4-16 MJIC	1
16	N37180	Hyd Hose - 3/8 x 270 Lg w/3/4-16 MJIC x 7/8-14 MORB - (9365, 9450, 9535)	1
	N56063	Hyd Hose - 3/8 x 330 Lg w/3/4-16 MJIC x 7/8-14 MORB - (9445, 9550, 9650)	1
	N56063	Hyd Hose - 3/8 x 330 Lg w/3/4-16 MJIC x 7/8-14 MORB - (9800 and 91000)	1
17	N25754	Connector - 3/4-16 MJIC	2
18	N34505	Connector - 7/8-14 (#10) MJIC x 7/8-14 (#10) MORB	2
19	N16346	Connector - 1 5/16-12 MJIC	2
20	N19338	Connector - 1 5/16-12 FJIC x 1 1/16-12 MJIC - (9445, 9550, 9650) (9800 and 9100)	2
21	N16143	90 Elbow - Swivel - 9/16-18 JIC x 9/16-18 ORB	1
22	N36380	45 Elbow - Swivel - 3/4-16 FJIC x 3/4-16 MJIC	1
23	N36382	45 Elbow - Swivel - 1 5/16-12 FJIC x 1 5/16-12 MJIC	2
24	N58671	Plate - Case Drain Header Mount	1
25	N58340	Tag - Hose ID - Air Tank - Fan 2 - PRESSURE	3
26	N58341	Tag - Hose ID - Air Tank - Fan 2 - RETURN	3
27	N58342	Tag - Hose ID - Air Tank - Fan 2 - CASE DRAIN	3
28	C-4698	Nylon Oil Line Clamp	14
29	D-4808	Oil Line Clamp	8
30	N21632	Oil Line Spacer	4
31	C-3664	Hex Bolt - 3/8 x 5 1/2 Lg	4
32	N15559	Spacer - 0.385 ID x 5/8 OD x 1 Lg	4
33	N34498	1/2 Male Pioneer Tip - 7/8-14 FORB	2
34	N34488	1/2 Pioneer Coupler - 7/8-14 FORB	1
35	N37914	3/4 Male Tip - 1 1/16-12 FORB	2
	N69669	Kit-Hydraulic Tip Adapter -1/2 Male Pioneer (See Page 14-63 for details)	
36	N37915	3/4 Female Coupler - 1 1/16-12 FORB	2
37	K50834	3/8 Flat Face Tip - 3/4-16 FORB	1
38	C14840	Connector - 3/4-16 MORB x 7/8-14 MJIC	4
39	N34505	Connector - Swivel - 7/8-14 MORB x 7/8-14 MJIC	1
40	C24585	90 Elbow - 7/8-14 MJIC x 3/4-16 MORB	1
41	N34646	90 Elbow - 7/8-14 MJIC x 1 1/16-12 MORB	1
42	N37036	Hyd Hose - 3/4 x 396 Lg w/1 1/16-12 MORB (3-Frame Contour Air Drill)	2
42A	N37035	Hyd Hose - 3/4 x 348 Lg w/1 1/16-12 MORB	2
42B	N44955	Hyd Hose - 3/4 x 456 Lg w/1 1/16-12 MORB (5-Frame Contour Air Drill)	2
43	N50099	Hyd Hose - 3/8 x 348 Lg w/7/8-14 FJIC x 7/8-14 FJIC Swivel End	1
43A	N55806	Hyd Hose - 3/8 x 300 Lg w/7/8-14 FJIC Ends	1
43B	N50088	Hyd Hose - 3/8 x 396 Lg w/7/8-14 FJIC Ends (5-Frame Contour Air Drill)	1
44	F-4565	Hyd Hose - 1/2 x 60 Lg w/7/8-14 FJIC	1
45	N58670	Case Drain Header	1
46	C28505	Plug - 3/4-16 MORB - Used on Ports not in use on Case Drain Header	1
47	C15319	Hex Bolt - 1/4 x 2 1/2 Lg	3
48	W-521	Lockwasher - 1/4	3
49	W-512	Hex Nut - 1/4	3
50	N64583	Coupler - Test Port - 7/16-20 (#4) MORB	2
51	K62978	Tee - Gauge Port - 7/8-14 (#10) MJIC x 7/8-14 (#10) FJIC x 7/16-20 (#4) FORB	2

- Jan-2018 to present -

Dual Fan Hydraulic - Option
Tow Between

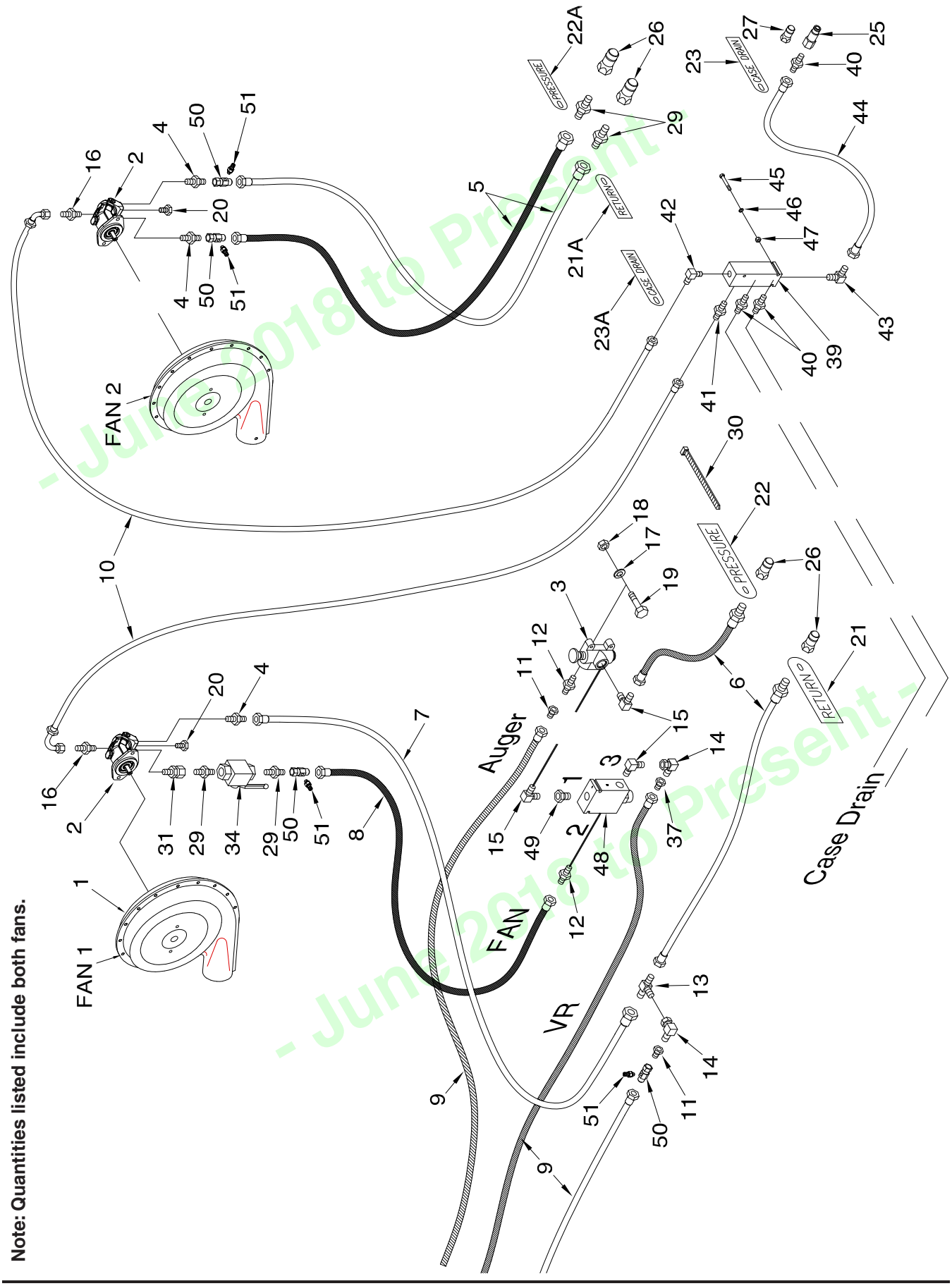

Note: Quantities listed include both fans.

Dual Fan - Tow Between VRT

Item	Part No.	Description	Qty
1	* * * * *	Fan - See Section 11	2
2	N53243	Hydraulic Motor W/ Internal Check Valve - Rexroth - See Section 11	2
3	N37514	Selector Valve (Seal Kit # N31603) (Knob # C26358)	1
4	N34505	Connector - 7/8-14 (#10) MJIC x 7/8-14 (#10) MORB	3
5	N53484	Hyd Hose - 3/4 x 150 Lg - 7/8-14 FJIC swivel ends	2
6	N37038	Hyd Hose - 3/4 x 84 Lg w/ 1 1/16-12 MORB x 1 1/16-12 FJIC	2
7	N53494	Hyd Hose - 3/4 x 66 - 1 1/16-12 FJIC x 7/8-14 FJIC swivel end	1
8	N53496	Hyd Hose - 3/4 x 54 - 1 1/16-12 FJIC x 7/8-14 FJIC swivel end - 9365 to 9650	1
	N53494	Hyd Hose - 3/4 x 66 - 1 1/16-12 FJIC x 7/8-14 FJIC swivel end - 9800	1
9	F-5679	Hyd Hose - 1/2 x 96 Lg w/7/8-14 MJIC x 7/8-14 FJIC - 9365 to 9650	2
	N55169	Hyd Hose - 1/2 x 108 Lg w/7/8-14 MJIC x 7/8-14 FJIC swivel end - 9800	2
10	N37421	Hyd Hose - 3/8 x 108 - 3/4-16 FJIC x 9/16-18 FJIC w/90 Bend	2
11	N19337	Connector - 7/8-14 MJIC x 1 1/16-12 FJIC	2
12	N15990	Connector - 1 1/16-12 MJIC x 1 1/16-12 MORB	2
13	N19549	Tee - 1 1/16 MJIC	1
14	N21189	90 Elbow - Swivel - 1 1/16-12 FJIC x 1 1/16-12 MJIC	2
15	N16359	90 Elbow - 1 1/16-12 MJIC x 1 1/16-12 MORB	3
16	N29358	Connector - 9/16-18 MJIC x 9/16-18 MORB	2
17	W-522	Lockwasher - 5/16	2
18	W-513	Hex Nut - 5/16	2
19	S-1303	Hex Bolt - 5/16 x 2 Lg	2
20	N16621	Plug - 9/16-18 MORB	2
21	N34577	Tag - Hose ID Tank - Fan/Auger - RETURN	1
21A	N58341	Tag - Hose ID - Air Tank - Fan 2 - RETURN	1
22	N34576	Tag - Hose ID - Tank - Fan/Auger - PRESSURE	1
22A	N58340	Tag - Hose ID - Air Tank - Fan 2 - PRESSURE	1
23	N34578	Tag - Hose ID - Tank - Fan/Auger - CASE DRAIN	1
23A	N58342	Tag - Hose ID - Air Tank - Fan 2 - CASE DRAIN	1
24	K50961	Connector - 3/4-16 MORB x 7/8-14 FORB	1
25	K50834	3/8 Flat Face Tip - 3/4-16 FORB	1
26	N37914	3/4 Male Pioneer Tip - 1 1/16-12 FORB	2
	N69669	Kit-Hydraulic Tip Adapter -1/2 Male Pioneer (See Page 14-63 for details)	
27	N34498	1/2 Male Pioneer Tip - 7/8-14 FORB	7
28	N34488	1/2 Female Pioneer Coupler - 7/8-14 FORB	2
29	N47903	Connector - 7/8-14 MJIC x 1 1/16-12 MORB	4
30	D-4951	Nylon Tie Strap -7 3/8 Lg	7
	D-4838	Nylon Tie Strap -14 1/2 Lg	2
31	N34620	Connector - Swivel - 7/8-14 MORB x 7/8-14 FJIC	4
32	C-4394	Tee - (3) 7/8-14 MJIC	1
33	K-5806	90 Elbow - Swivel - 7/8-14 MJIC x 7/8-14 FJIC	1
34	N37845	Ball Valve	1
35	N15990	Connector - 1 1/16-12 MJIC x 1 1/16-12 MORB	1
36	N37849	Connector - 1 1/16-12 FJIC x 1 1/16-12 MORB	1
37	N19337	Connector - 7/8-14 MJIC x 1 1/16-12 FJIC	1
38	N29356	Swivel Tee - (1) - 1 1/16-12 FJIC x (2) - 1 1/16-12 MJIC	1
39	N58670	Case Drain Header	1
40	C14840	Connector - 3/4-16 MORB x 7/8-14 MJIC	3
41	C15330	Connector - 3/4-16 MORB x 3/4-16 MJIC (10178)	1
42	C15317	90 Elbow - 3/4-16 MJIC x 3/4-16 MORB	1
43	N34646	90 Elbow - 7/8-14 MJIC x 1 1/16-12 MORB	1
44	F-4565	Hyd Hose - 1/2 x 60 Lg w/7/8-14 FJIC	1
45	C15319	Hex Bolt - 1/4 x 2 1/2 Lg	3
46	W-521	Lockwasher - 1/4	3
47	W-512	Hex Nut - 1/4	3
48	N56180	Priority Flow Valve (N59025 Cartridge)	1
49	N37849	Connector - 1 1/16-12 MORB x 1 1/16-12 FJIC	1
50	K62978	Tee - Gauge Port - 7/8-14 (#10) MJIC x 7/8-14 (#10) FJIC x 7/16-20 (#4) FORB	4
51	N64583	Coupler - Test Port - 7/16-20 (#4) MORB	4

- Manufactured 11-2018 to Present -

Dual Flow Hydraulics - 12” Auger - Option
9800 and 91000 Tow Behind - VR Drive - Single Fan

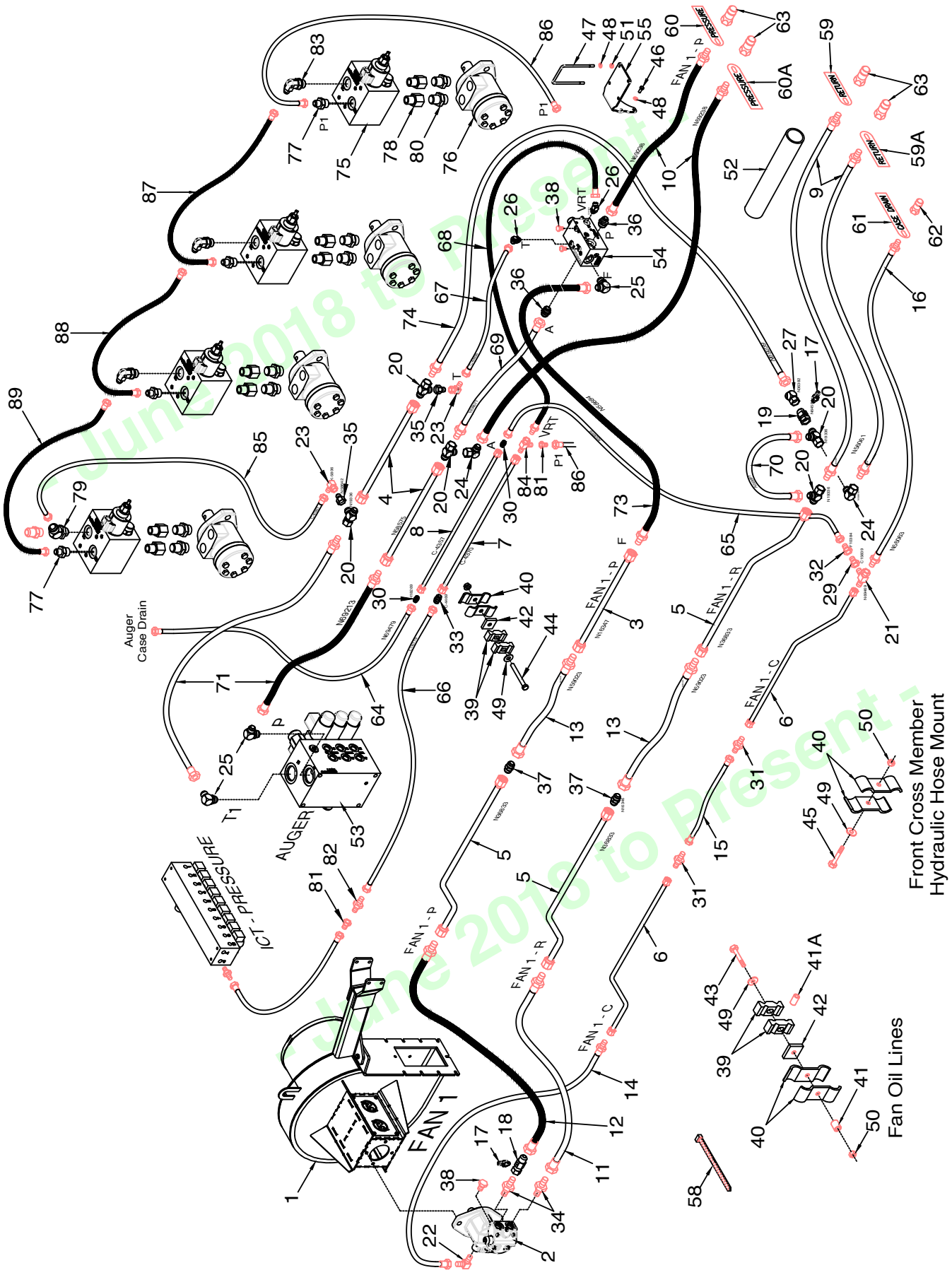

Dual Flow Hydraulics - 9800 and 91000 Tow Behind - VR Drive - Single Fan

Item	Part No.	Description	Qty
Cart System			
1	* * * * *	Fan - See Section 11	1
2	N53243	Hydraulic Motor W/ Internal Check Valve - Rexroth - See Section 11	1
3	N16347	Oil Line - 1 x 72 Lg -1 5/16-12 FJIC (#16)	1
4	N58575	Oil Line - 1 x 96 Lg - 1 5/16-12 FJIC (#16)	2
5	N36833	Oil Line - 1 x 94 Lg - 6 Offset Bend x 1 5/16-12 FJIC (#16)	3
6	N36444	Oil Line - 1/2 x 94 Lg - 6 Offset Bend x 3/4-16 FJIC	2
7	C-4370	Oil Line - 5/8 x 128 Lg - 7/8-14 FJIC	1
8	C-4357	Oil Line - 3/8 x 130 1/2 Lg - 9/16-18 FJIC	1
9	N56061	Hyd Hose - 3/4 x 330 Lg - 1 5/16-12 MJIC (#16) x 1 1/16-12 MORB (#12)	2
10	N69238	Hyd Hose - 3/4 x 330 Lg - 1 5/16-12 FJIC (#16) x 1 1/16-12 MORB (#12)	2
11	N53493	Hyd Hose - 3/4 x 48 Lg - 1 5/16-12 MJIC x 7/8-14 FJIC - (Fan 1)	1
12	N53495	Hyd Hose - 3/4 x 54 Lg - 1 5/16-12 MJIC x 7/8-14 FJIC - (Fan 1)	1
13	N59023	Hyd Hose - 3/4 x 48 Lg - 1 5/16-12 MJIC x 1 5/16-12 FJIC swivel	2
14	N19475	Hyd Hose - 3/8 x 48 Lg - 9/16-18 FJIC x 3/4-16 MJIC - (Fan 1)	1
15	D10821	Hyd Hose - 3/8 x 38 Lg - 3/4-16 FJIC	1
16	N56063	Hyd Hose - 3/8 x 330 Lg - 3/4-16 MJIC x 7/8-14 MORB	1
17	N64583	Coupler - Test Port - 7/16-20 (#4) MORB	2
18	K62978	Tee - Gauge Port - 7/8-14 (#10) MJIC x 7/8-14 (#10) FJIC x 7/16-20 (#4) FORB	1
19	N64584	Tee - Gauge Port - 1 5/16-12 (#16) MJIC X 1 5/16-12 (#16) FJIC x 7/16-20 (#4) FORB	1
20	N19336	Tee - Swivel - (1) 1 5/16-12 FJIC x (2) 1 5/16-12 MJIC	5
21	N69469	Tee - Swivel- (2) 3/4-16 (#08) MJIC x (1) 3/4-16 (#08) FJIC (MMF)	1
22	N16143	90 Elbow - Swivel - 9/16-18 MJIC x 9/16-18 MORB	1
23	K-5806	90 Elbow - Swivel - 7/8-14 MJIC x 7/8-14 FJIC	2
24	N58616	90 Elbow - 1 5/16-12 MJIC (#16) x 1 5/16-12 FJIC (#16)	2
25	N58576	90 Elbow - 1 5/16-12 MJIC (#16) x 1 5/16-12 MORB (#16)	3
26	C26333	45 Elbow - 7/8-14 (#10) MJIC x 3/4-16 (#08) MORB	2
27	N36382	45 Elbow - Swivel - 1 5/16-12 FJIC (#16) x 1 5/16-12 MJIC (#16)	1
28	* * * * *		
29	C15839	Connector - 7/8-14 (#10) MJIC x 3/4-16 (#08) FJIC	1
30	H18269	Connector - 9/16-18 MJIC	2
31	N25754	Connector - 3/4-16 MJIC	2
32	F10384	Connector - 7/8-14 (#10) FJIC x 9/16-18 (#06) MJIC	1
33	C-4469	Connector - 7/8-14 MJIC (#10)	1
34	N34505	Connector - 7/8-14 (#10) MJIC x 7/8-14 (#10) MORB	2
35	N58642	Connector - 7/8-14 MJIC (#10) x 1 5/16-12 MJIC (#16)	2
36	N58621	Connector - 1 5/16-12 MJIC (#16) x 1 5/16-12 MORB (#16)	2
37	N16346	Connector - 1 5/16-12 MJIC (#16)	2
38	N29365	Plug - 9/16-18 MORB	4
39	C-4698	Nylon Oil Line Clamp	12
40	D-4808	Oil Line Clamp	14
41	N16257	Oil Line Spacer - 3/8 ID x 5/8 OD x 5/8 Lg	4
41A	N21632	Oil Line Spacer - 3/8 ID x 9/16 OD x 3/4 Lg	4
42	S31476	Plate Spacer - 1/2	6
43	C-1550	Hex Bolt - 3/8 x 4 Lg	4
44	S-1299	Hex Bolt - 3/8 x 4 1/2 Lg	2
45	W-477	Hex Bolt - 3/8 x 1 1/2 Lg	1
46	W-475	Hex Bolt - 3/8 x 1	3
47	N25457	U-Bolt - 3/8 x 4 x 8	2
48	W-523	Lock Washer 3/8	7
49	W-538	Flatwasher - 3/8	7
50	M-3388	Locknut - 3/8	8
51	W-514	Hex Nut 3/8	4
52	N62246	Hydraulic Hose Sleeve - 3” Dia x 36” Lg	1
53	N58349	Auger - Valve - Solenoid - Hydraulic Assist Auger - 45 gpm	1
54	N58620	Selector Valve - Dual Flow Auger - VR Drive	1
55	N69202	Mount Bracket	1
56	* * * * *		
57	* * * * *		
58	D-4838	Tie Strap - 14 1/2 Lg	16
	D-4951	Tie Strap - 7 3/8 Lg	9

- June 2018 to Present -

Dual Flow Hydraulics - 9800 and 91000 Tow Behind - VR Drive - Single Fan

Item	Part No.	Description	Qty
59	N34577	Tag - Hose ID Tank - Fan/Auger - RETURN	1
59A	N58341	Tag - Hose ID - Air Tank - Fan 2 - RETURN	1
60	N34576	Tag - Hose ID - Tank - Fan/Auger - PRESSURE	1
60A	N58340	Tag - Hose ID - Air Tank - Fan 2 - PRESSURE	1
61	N34578	Tag - Hose ID - Tank - Fan/Auger - CASE DRAIN	1
62	N34498	1/2 Male Pioneer Tip - 7/8-14 FORB (Cart - 1)	1
63	N37914	3/4 Male Pioneer Tip - 1 1/16-12 FORB (Cart - 2)	4
64	N69479	Hyd Hose - 3/8 x 290 Lg w/ #6 9/16-18 FJIC	1
65	N53696	Hyd Hose - 3/8 x 66 Lg w/9/16-18 FJIC	1
66	C18779	Hyd Hose - 1/2 x 72 Lg w/7/8-14 FJIC	1
67	C-4468	Hyd Hose - 1/2 x 24 Lg w/7/8-14 FJIC	1
68	C-4385	Hyd Hose - 1/2 x 24 Lg w/7/8-14 MJIC x 7/8-14 FJIC	1
69	N58677	Hyd Hose - 3/4 x 14 Lg - 1 5/16-12 MJIC x 1 5/16-12 FJIC swivel	1
70	N58681	Hyd Hose - 3/4 x 24 Lg - 1 5/16-12 FJIC swivel ends	1
71	N69213	Hyd Hose - 3/4 x 62 Lg - 1 5/16-12 FJIC (#16) x 1 5/16-12 MJIC (#16)	2
72	* * * * *		
73	N58684	Hyd Hose - 3/4 x 72 Lg - 1 5/16-12 MJIC x 1 5/16-12 FJIC swivel end	1
74	N69239	Hyd Hose - 3/4 x 78 Lg - 1 5/16-12 FJIC (#16) x 1 5/16-12 MJIC (#16)	1
VR System			
75	N60258	Manifold Assembly (See page 16-24)	1
76	**N72140**	**Hydraulic Motor - Danfoss OMPX-80 - 2021 to present (See Page 16-49)**	1
77	C15348	Connector - 9/16-18 (#06) MJIC x 3/4-16 (#08) MORB	4
	N65810	45 Elbow - 9/16-18 (#06) MJIC x 3/4-16 (#08) MORB	
78	N49460	Connector - Swivel - 7/8-14 (#10) FJIC x 3/4-16 (#08) MORB	8
79	C14840	Connector - 7/8-14 (#10) MJIC x 3/4-16 (#08) MORB	1
	C26333	**45 Elbow - 7/8-14 (#10) MJIC x 3/4-16 (#08) MORB**	
80	N34505	Connector - 7/8-14 (#10) MJIC x 7/8-14 (#10) MORB	8
81	F10384	Connector - 7/8-14 (#10) FJIC x 9/16-18 (#06) MJIC	2
82	C-4469	Connector - 7/8-14 MJIC	2
	C44003	Plug - 7/8-14 MJIC	
83	N64050	90 Elbow - 9/16-18 (#06) MJIC x 3/4-16 (#08) MORB	3
	N51990	45 Elbow - 3/4-16 MJIC x 7/8-14 MORB	
84	H18746	Tee - Swivel - (1) - 7/8-14 FJIC x (2) - 7/8-14 MJIC	2
85	C-4387	Hyd Hose - 1/2 x 36 Lg w/7/8-14 MJIC x 7/8-14 FJIC	1
		9800	
86	**S42969**	**Hyd Hose - 3/8 x 36 Lg w/ #6 9/16-18 FJIC**	**1**
87	**N53696**	**Hyd Hose - 3/8 x 66 Lg - #6 9/16-18 FJIC**	**1**
88	**S65380**	**Hyd Hose - 3/8 x 45 Lg - #6 9/16-18 FJIC**	**1**
89	**N53696**	**Hyd Hose - 3/8 x 66 Lg - #6 9/16-18 FJIC**	**1**
		9680	
86	**N53696**	**Hyd Hose - 3/8 x 66 Lg - #6 9/16-18 FJIC**	**1**
88	**N53696**	**Hyd Hose - 3/8 x 66 Lg - #6 9/16-18 FJIC**	**1**
89	**N53696**	**Hyd Hose - 3/8 x 66 Lg - #6 9/16-18 FJIC**	**1**
		9555	
86	**S65380**	**Hyd Hose - 3/8 x 45 Lg - #6 9/16-18 FJIC - VR**	**1**
	S42969	**Hyd Hose - 3/8 x 36 Lg w/ #6 9/16-18 FJIC - ICT**	**1**
89	**N53696**	**Hyd Hose - 3/8 x 66 Lg - #6 9/16-18 FJIC**	**1**
	N19023	Decal - Danger "HOT" (Not Shown)	1
	N36263	Decal - Warning "BURN HAZARD" (Not Shown)	1
	N36443	Decal - Auger "LEVER POSITION" (Not Shown)	1
	N71598	Decal - "AUGER / FAN / "CALIBRAITON" (Not Shown)	1

- June 2018 to Present -

Dual Flow Hydraulics - 12” Auger - Option
9800 and 91000 Tow Behind - VR Drive - Dual Fan

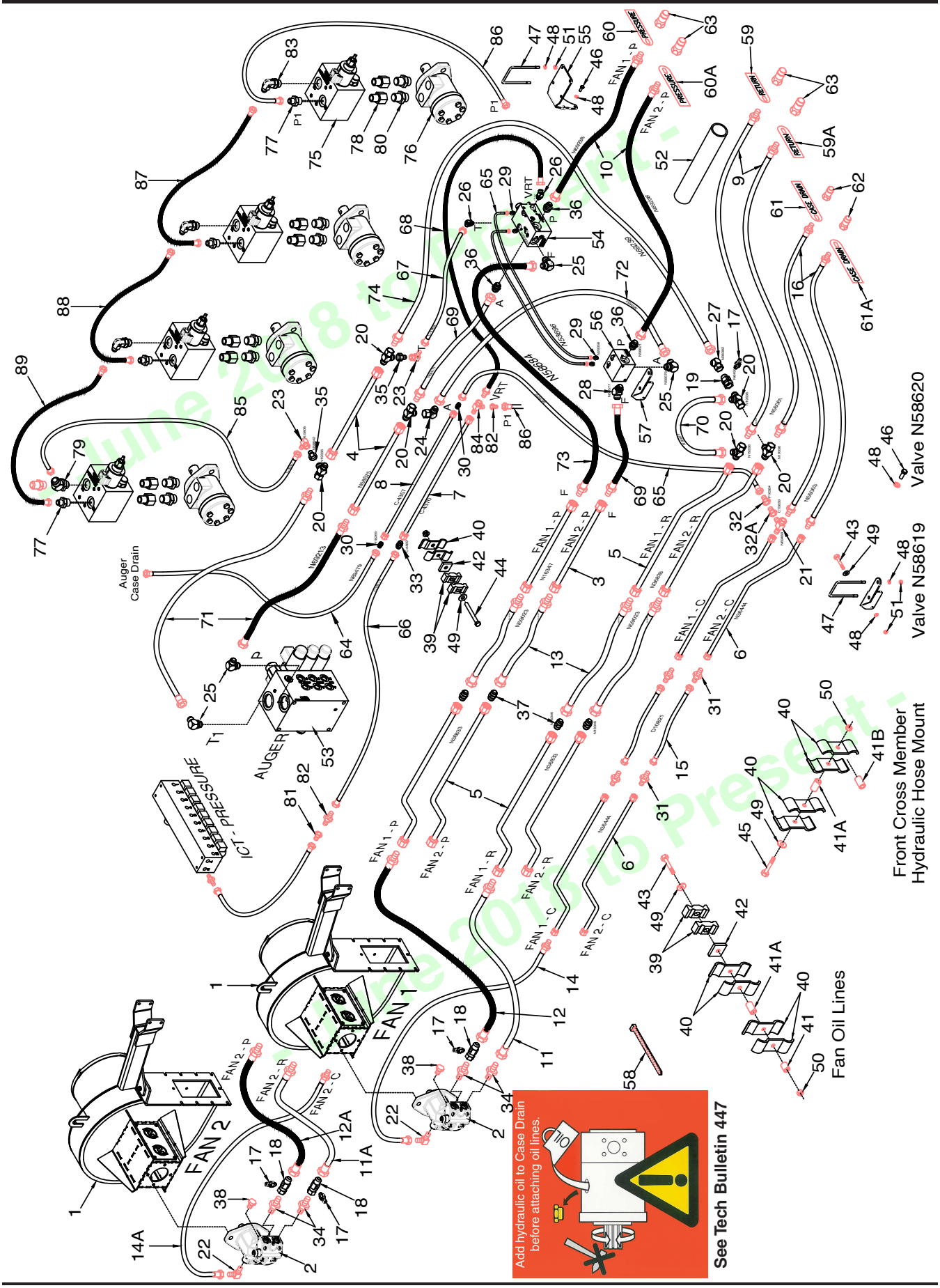

Auger Dual Flow Hydraulics - 9800 and 91000 Tow Behind - VR Drive - Dual Fan

Item	Part No.	Description	Qty
Cart System			
1	* * * * *	Fan - See Section 11	2
2	N53243	Hydraulic Motor W/ Internal Check Valve - Rexroth - See Section 11	2
3	N16347	Oil Line - 1 x 72 Lg -1 5/16-12 FJIC (#16)	2
4	N58575	Oil Line - 1 x 96 Lg - 1 5/16-12 FJIC (#16)	2
5	N36833	Oil Line - 1 x 94 Lg - 6 Offset Bend x 1 5/16-12 FJIC (#16)	6
6	N36444	Oil Line - 1/2 x 94 Lg - 6 Offset Bend x 3/4-16 FJIC	4
7	C-4370	Oil Line - 5/8 x 128 Lg - 7/8-14 FJIC	1
8	C-4357	Oil Line - 3/8 x 130 1/2 Lg - 9/16-18 FJIC	1
9	N56061	Hyd Hose - 3/4 x 330 Lg - 1 5/16-12 MJIC (#16) x 1 1/16-12 MORB (#12)	2
10	N69238	Hyd Hose - 3/4 x 330 Lg - 1 5/16-12 FJIC (#16) x 1 1/16-12 MORB (#12)	2
11	N53493	Hyd Hose - 3/4 x 48 Lg - 1 5/16-12 MJIC x 7/8-14 FJIC - (Fan 1)	1
11A	N53247	Hyd Hose - 3/4 x 72 Lg - 1 5/16-12 MJIC x 7/8-14 FJIC - (Fan 2)	1
12	N53495	Hyd Hose - 3/4 x 54 Lg - 1 5/16-12 MJIC x 7/8-14 FJIC - (Fan 1)	1
12A	N53249	Hyd Hose - 3/4 x 78 Lg - 1 5/16-12 MJIC x 7/8-14 FJIC - (Fan 2)	1
13	N59023	Hyd Hose - 3/4 x 48 Lg - 1 5/16-12 MJIC x 1 5/16-12 FJIC swivel	4
14	N19475	Hyd Hose - 3/8 x 48 Lg - 9/16-18 FJIC x 3/4-16 MJIC - (Fan 1)	1
14A	N53492	Hyd Hose - 3/8 x 72 Lg - 9/16-18 FJIC x 3/4-16 MJIC - (Fan 2)	1
15	D10821	Hyd Hose - 3/8 x 38 Lg - 3/4-16 FJIC	2
16	N56063	Hyd Hose - 3/8 x 330 Lg - 3/4-16 MJIC x 7/8-14 MORB	2
17	N64583	Coupler - Test Port - 7/16-20 (#4) MORB	4
18	K62978	Tee - Gauge Port - 7/8-14 (#10) MJIC x 7/8-14 (#10) FJIC x 7/16-20 (#4) FORB	3
19	N64584	Tee - Gauge Port - 1 5/16-12 (#16) MJIC X 1 5/16-12 (#16) FJIC x 7/16-20 (#4) FORB	1
20	N19336	Tee - Swivel - (1) 1 5/16-12 FJIC x (2) 1 5/16-12 MJIC	6
21	N69469	Tee - Swivel- (2) 3/4-16 (#08) MJIC x (1) 3/4-16 (#08) FJIC (MMF)	1
22	N16143	90 Elbow - Swivel - 9/16-18 MJIC x 9/16-18 MORB	2
23	K-5806	90 Elbow - Swivel - 7/8-14 MJIC x 7/8-14 FJIC	2
24	N58616	90 Elbow - 1 5/16-12 MJIC (#16) x 1 5/16-12 FJIC (#16)	1
25	N58576	90 Elbow - 1 5/16-12 MJIC (#16) x 1 5/16-12 MORB (#16)	4
26	C26333	45 Elbow - 7/8-14 (#10) MJIC x 3/4-16 (#08) MORB	2
27	N36382	45 Elbow - Swivel - 1 5/16-12 FJIC (#16) x 1 5/16-12 MJIC (#16)	1
28	N58577	45 Elbow - 1 5/16-12 (#16) MJIC x 1 5/16-12 (#16) MORB	1
29	N29358	Connector - 9/16-18 MJIC x 9/16-18 MORB	4
30	H18269	Connector - 9/16-18 MJIC	2
31	N25754	Connector - 3/4-16 MJIC	4
32	F10384	Connector - 7/8-14 (#10) FJIC x 9/16-18 (#06) MJIC	1
32A	C15839	Connector - 7/8-14 (#10) MJIC x 3/4-16 (#08) FJIC	1
33	C-4469	Connector - 7/8-14 MJIC (#10)	1
34	N34505	Connector - 7/8-14 (#10) MJIC x 7/8-14 (#10) MORB	4
35	N58642	Connector - 7/8-14 MJIC (#10) x 1 5/16-12 MJIC (#16)	2
36	N58621	Connector - 1 5/16-12 MJIC (#16) x 1 5/16-12 MORB (#16)	3
37	N16346	Connector - 1 5/16-12 MJIC (#16)	4
38	N29365	Plug - 9/16-18 MORB	2
39	C-4698	Nylon Oil Line Clamp	12
40	D-4808	Oil Line Clamp	24
41	N16257	Oil Line Spacer - 3/8 ID x 5/8 OD x 5/8 Lg	4
41A	N15559	Oil Line Spacer - 3/8 ID x 5/8 OD x 1 Lg	5
41B	D-5011	Oil Line Spacer - 21/32 ID x 1 OD x 1 9/16 Lg	1
42	S31476	Plate Spacer - 1/2	6
43	C-3664	Hex Bolt - 3/8 x 5 1/2 Lg N11461	4
44	S-1299	Hex Bolt - 3/8 x 4 1/2 Lg C-1550	2
45	D-5249	Hex Bolt - 3/8 x 3 1/4 Lg	1
46	W-475	Hex Bolt - 3/8 x 1	3
47	N25457	U-Bolt - 3/8 x 4 x 8	3
48	W-523	Lock Washer 3/8	11
49	W-538	Flatwasher - 3/8	9
50	M-3388	Locknut - 3/8	8
51	W-514	Hex Nut 3/8	8
52	N62246	Hydraulic Hose Sleeve - 3” Dia x 36” Lg	1
53	N58349	Auger - Valve - Solenoid - Hydraulic Assist Auger - 45 gpm	1
54	N58620	Selector Valve - Dual Flow Auger - VR Drive	1
55	N69202	Mount Bracket	1
56	N58619	Diverter Valve - Fan 2	1
57	N58643	Mount Bracket	1

- Serial No. 9800 - 9900 - 91000 Series - June 2018 to Present -

Auger Dual Flow Hydraulics - 9800 and 91000 Tow Behind - VR Drive - Dual Fan

Item	Part No.	Description	Qty
58	D-4838	Tie Strap - 14 1/2 Lg	16
	D-4951	Tie Strap - 7 3/8 Lg	9
59	N34577	Tag - Hose ID Tank - Fan/Auger - RETURN	1
59A	N58341	Tag - Hose ID - Air Tank - Fan 2 - RETURN	1
60	N34576	Tag - Hose ID - Tank - Fan/Auger - PRESSURE	1
60A	N58340	Tag - Hose ID - Air Tank - Fan 2 - PRESSURE	1
61	N34578	Tag - Hose ID - Tank - Fan/Auger - CASE DRAIN	1
61A	N58342	Tag - Hose ID - Tank - Fan 2 - CASE DRAIN	1
62	N34498	1/2 Male Pioneer Tip - 7/8-14 FORB (Cart - 1)	2
63	N37914	3/4 Male Pioneer Tip - 1 1/16-12 FORB (Cart - 2)	4
64	N69479	Hyd Hose - 3/8 x 290 Lg w/ #6 9/16-18 FJIC	1
65	N53696	Hyd Hose - 3/8 x 66 Lg w/9/16-18 FJIC	3
66	C18779	Hyd Hose - 1/2 x 72 Lg w/7/8-14 FJIC	1
67	C-4468	Hyd Hose - 1/2 x 24 Lg w/7/8-14 FJIC	1
68	C-4385	Hyd Hose - 1/2 x 24 Lg w/7/8-14 MJIC x 7/8-14 FJIC	1
69	N58677	Hyd Hose - 3/4 x 14 Lg - 1 5/16-12 MJIC x 1 5/16-12 FJIC swivel	2
70	N58681	Hyd Hose - 3/4 x 24 Lg - 1 5/16-12 FJIC swivel ends	1
71	N69213	Hyd Hose - 3/4 x 62 Lg - 1 5/16-12 FJIC (#16) x 1 5/16-12 MJIC (#16)	2
72	N58683	Hyd Hose - 3/4 x 66 Lg - 1 5/16-12 FJIC swivel ends	1
73	N58684	Hyd Hose - 3/4 x 72 Lg - 1 5/16-12 MJIC x 1 5/16-12 FJIC swivel end	1
74	N69239	Hyd Hose - 3/4 x 78 Lg - 1 5/16-12 FJIC (#16) x 1 5/16-12 MJIC (#16)	1
VR System			
75	N60258	Manifold Assembly (See page 16-24)	1
76	**N72140**	**Hydraulic Motor - Danfoss OMPX-80 - 2021 to present (See Page 16-49)**	1
77	C15348	Connector - 9/16-18 (#06) MJIC x 3/4-16 (#08) MORB	4
	N65810	45 Elbow - 9/16-18 (#06) MJIC x 3/4-16 (#08) MORB	
78	N49460	Connector - Swivel - 7/8-14 (#10) FJIC x 3/4-16 (#08) MORB	8
79	C14840	Connector - 7/8-14 (#10) MJIC x 3/4-16 (#08) MORB	1
	C26333	**45 Elbow - 7/8-14 (#10) MJIC x 3/4-16 (#08) MORB**	
80	N34505	Connector - 7/8-14 (#10) MJIC x 7/8-14 (#10) MORB	8
81	F10384	Connector - 7/8-14 (#10) FJIC x 9/16-18 (#06) MJIC	2
82	C-4469	Connector - 7/8-14 MJIC	2
	C44003	Plug - 7/8-14 MJIC	
83	N64050	90 Elbow - 9/16-18 (#06) MJIC x 3/4-16 (#08) MORB	3
	N51990	45 Elbow - 3/4-16 MJIC x 7/8-14 MORB	
84	H18746	Tee - Swivel - (1) - 7/8-14 FJIC x (2) - 7/8-14 MJIC	2
85	C-4387	Hyd Hose - 1/2 x 36 Lg w/7/8-14 MJIC x 7/8-14 FJIC	1
		9800	
86	**S42969**	**Hyd Hose - 3/8 x 36 Lg w/ #6 9/16-18 FJIC**	**1**
87	**N53696**	**Hyd Hose - 3/8 x 66 Lg - #6 9/16-18 FJIC**	**1**
88	**S65380**	**Hyd Hose - 3/8 x 45 Lg - #6 9/16-18 FJIC**	**1**
89	**N53696**	**Hyd Hose - 3/8 x 66 Lg - #6 9/16-18 FJIC**	**1**
		9680	
86	**N53696**	**Hyd Hose - 3/8 x 66 Lg - #6 9/16-18 FJIC**	**1**
88	**N53696**	**Hyd Hose - 3/8 x 66 Lg - #6 9/16-18 FJIC**	**1**
89	**N53696**	**Hyd Hose - 3/8 x 66 Lg - #6 9/16-18 FJIC**	**1**
		9555	
86	**S65380**	**Hyd Hose - 3/8 x 45 Lg - #6 9/16-18 FJIC - VR**	**1**
	S42969	**Hyd Hose - 3/8 x 36 Lg w/ #6 9/16-18 FJIC - ICT**	**1**
89	**N53696**	**Hyd Hose - 3/8 x 66 Lg - #6 9/16-18 FJIC**	**1**
	N19023	Decal - Danger "HOT" (Not Shown)	1
	N36263	Decal - Warning "BURN HAZARD" (Not Shown)	1
	N36443	Decal - Auger "LEVER POSITION" (Not Shown)	1
	N71598	Decal - "AUGER / FAN / "CALIBRAITON" (Not Shown)	1

- June 2018 to Present -

Dual Flow Hydraulics - 12” Auger - Option
9800 Tow Between - VR Drive - Single Fan

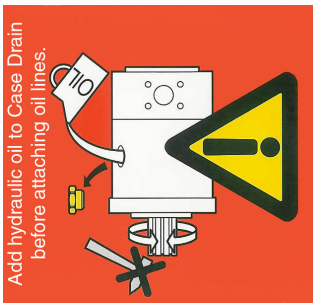

See Tech Bulletin 447

- June 2018 to Present -

Auger Dual Flow Hydraulics - 9800 Tow Between - VR Drive - Single Fan

Item	Part No.	Description	Qty
1	* * * * *	Fan - See Section 11	1
2	N53243	Hydraulic Motor W/ Internal Check Valve - Rexroth - See Section 11	1
3	**N58620**	**Selector Valve - Dual Flow Auger - VR Drive**	**1**
4	N34505	Connector - 7/8-14 (#10) MJIC x 7/8-14 (#10) MORB	2
5	C-4370	Oil Line - 5/8 x 128 Lg w/ 7/8-14 FJIC	1
6	C-4357	Oil Line - 3/8 x 130 1/2 Lg w/ 9/16-18 FJIC	1
7	N58575	Oil Line - 1 x 96 Lg w/ 1 5/16-12 FJIC	2
8	N29358	Connector - 9/16-18 MJIC x 9/16-18 MORB	1
9	H18269	Connector - 9/16-18 MJIC	1
10	C-4469	Connector - 7/8-14 MJIC	1
11	N58642	Connector - 7/8-14 MJIC (#10) x 1 5/16-12 MJIC (#16)	2
12	N58621	Connector - 1 5/16-12 MJIC (#16) x 1 5/16-12 MORB (#16)	2
13	N16346	Connector - 1 5/16-12 MJIC	1
14	N64583	Coupler - Test Port - 7/16-20 (#4) MORB	2
15	K62978	Tee - Gauge Port - 7/8-14 (#10) MJIC x 7/8-14 (#10) FJIC x 7/16-20 (#4) FORB	1
16	N64584	Tee - Gauge Port - 1 5/16-12 (#16) MJIC X 1 5/16-12 (#16) FJIC x 7/16-20 (#4) FORB	1
17	N19336	Tee - Swivel - (1) 1 5/16-12 FJIC x (2) 1 5/16-12 MJIC	5
18	C-4403	Tee - (2) 9/16-18 MJIC x (1) 9/16-18 FJIC	1
19	* * * * *		
20	**N29365**	Plug - 9/16-18 MORB	4
21	N34577	Tag - Hose ID Tank - Fan/Auger - RETURN	2
22	N34576	Tag - Hose ID - Tank - Fan/Auger - PRESSURE	2
23	N34578	Tag - Hose ID - Tank - Fan/Auger - CASE DRAIN	1
24	C14840	Connector - 3/4-16 MORB x 7/8-14 MJIC	2
24A	C15330	Connector - 3/4-16 MORB x 3/4-16 MJIC (10178)	1
24B	C-4469	Connector - 7/8-14 (#10) MJIC	4
25	K50834	3/8 Flat Face Tip - 3/4-16 FORB	1
26	N37914	3/4 Male Pioneer Tip - 1 1/16-12 FORB	4
27	N34498	1/2 Male Pioneer Tip - 7/8-14 FORB	7
28	N34488	1/2 Female Pioneer Coupler - 7/8-14 FORB	6
29	S37662	Tag - Hose ID - Wing Lift - UNFOLD	2
30	S37661	Tag - Hose ID - Wing Lift - FOLD	2
31	S37663	Tag - Hose ID - Depth Control - LOWER	2
32	S37664	Tag - Hose ID - Depth Control - RAISE	2
33	S44456	Tag - Hose ID - Case Drain	1
33A	N59870	Tag - Hose ID - Auxiliary Circuit	1
34	N34620	Connector - 7/8-14 FJIC x 7/8-14 MORB	4
35	H24393	90 Elbow - 7/8-14 MJIC	6
36	N37348	Oil Line - 5/8 x 84 Lg w/ 7/8-14 FJIC	4
37	C-4370	Oil Line - 5/8 x 128 Lg w/ 7/8-14 FJIC	4
38	N16608	Coupler Clamp - Female Pioneer	6
39	N19458	Spacer Bushing - 0.364 ID x 0.540 OD x 2	4
39A	N19155	Spacer Bushing - 0.385 ID x 0.625 OD x 1/2	2
40	S13337	Hex Bolt - 5/16 x 6 Lg	2
41	W-469	Hex Bolt - 1/4 x 3/4 Lg	6
41A	C15319	Hex Bolt - 1/4 x 2 1/2 Lg	3
42	W-521	Lockwasher - 1/4	9
43	W-512	Hex Nut - 1/4	9
44	W-522	Lockwasher - 5/16	2
45	W-513	Hex Nut - 5/16	2
46	N37403	Hyd Hose - 1/2 x 192 Lg - 7/8-14 MJIC x 7/8-14 MORB	2
47	C-4387	Hyd Hose - 1/2 x 36 Lg w/7/8-14 MJIC x 7/8-14 FJIC Swivel	4
48	D-4838	Tie Strap - 14 1/2 Lg	15
48A	D-4951	Tie Strap - 7 3/8 Lg	15
48B	S13336	Tie Strap - 24 Lg	3
49	C-4698	Nylon Oil Line Clamp (STD-4) (Tillage-24)	30
50	S-1299	Hex Bolt - 3/8 x 4 1/2 Lg	3
51	C-3664	Hex Bolt - 3/8 x 5 1/2 Lg	4
52	W-538	Flatwasher - 3/8	7
53	M-3388	Locknut - 3/8	7
54	F-4565	Hyd Hose - 1/2 x 60 Lg w/7/8-14 FJIC	1
55	S22403	Hyd Hose - 1/2 x 120 Lg - 7/8-14 FJIC	2
56	N36833	Oil Line - 1 x 94 Lg w/ 1 5/16-12 FJIC (#16)	4
57	N58170	Hyd Hose - 3/4 x 192 Lg - 1 5/16-12 MJIC (#16) x 7/8-14 MORB (#10)	2
58	N58168	Hyd Hose - 3/4 x 36 Lg - 1 5/16-12 MJIC Ends	2
59	N58169	Hyd Hose - 3/4 x 36 Lg - 1 5/16 -12 MJIC (#16) x 7/8 -14 MORB	2
60	N58171	90 Elbow - 1 5/16-12 MJIC x 1 5/16-12 FJIC Swivel	2
61	D-4808	Oil Line Clamp	8
62	S31476	Plate Spacer - 1 1/2 x 1 1/2 x 1/2 thick	4
63	N58670	Case Drain Header	1
64	**C28505**	**Plug - 3/4-16 MORB**	**1**
65	N34646	90 Elbow - 7/8-14 MJIC x 1 1/16-12 MORB	1
66	K-5806	90 Elbow - Swivel - 7/8-14 MJIC x 7/8-14 FJIC	2
67	N58616	90 Elbow - 1 5/16-12 MJIC (#16) x 1 5/16-12 FJIC (#16)	2
68	**N58576**	**90 Elbow - 1 5/16-12 MJIC (#16) x 1 5/16-12 MORB (#16)**	**3**

- June 2016 to Present -

Auger Dual Flow Hydraulics - 9800 Tow Between - VR Drive - Single Fan

Item	Part No.	Description	Qty
69	C26333	45 Elbow - 7/8-14 MJIC x 3/4-16 MORB	2
70	N49599	45 Elbow - 7/8-14 MJIC x 7/8-14 MORB	2
71	* * * * *		
72	**N58349**	**Valve - Solenoid - Hydraulic Assist Auger - 45 gpm**	**1**
73	N53696	Hyd Hose - 3/8 x 66 Lg w/9/16-18 FJIC	1
74	N37421	Hyd Hose - 3/8 x 108 - 3/4-16 FJIC x 9/16-18 FJIC w/90 Bend	1
75	* * * * *		
76	N69479	Hyd Hose - 3/8 x 290 Lg w/ #6 9/16-18 FJIC	1
77	C-4468	Hyd Hose - 1/2 x 24 Lg w/7/8-14 FJIC	1
78	C-4385	Hyd Hose - 1/2 x 24 Lg w/7/8-14 MJIC x 7/8-14 FJIC	1
79	C18779	Hyd Hose - 1/2 x 72 Lg w/7/8-14 FJIC	2
80	N58677	Hyd Hose - 3/4 x 14 Lg - 1 5/16-12 MJIC x 1 5/16-12 FJIC swivel	2
81	N69691	Hyd Hose - 3/4 x 18 Lg - 1 5/16-12 FJIC (#16) x 7/8-14 FJIC (#10)	1
82	* * * * *		
83	* * * * *		
84	N69239	Hyd Hose - 3/4 x 78 Lg - 1 5/16-12 FJIC (#16) x 1 5/16-12 MJIC (#16)	1
85	**N69203**	**Hyd Hose - 3/4 x 208 Lg - 1 5/16-12 FJIC (#16) x 1 1/16-12 MORB (#12)**	**1**
86	* * * * *		
87	N69204	Hyd Hose - 3/4 x 134 Lg - 1 5/16-12 FJIC (#16) x 1 1/16-12 MORB (#12)	2
88	* * * * *		
89	N69213	Hyd Hose - 3/4 x 62 Lg - 1 5/16-12 FJIC (#16) x 1 5/16-12 MJIC (#16)	2
90	N69214	Hyd Hose - 3/4 x 185 Lg - 1 5/16-12 FJIC (#16) x 1 1/16-12 MORB (#12)	1
91	N69217	Hyd Hose - 3/4 x 62 Lg - 1 5/16-12 FJIC (#16) x 7/8-14 FJIC (#10)	1
VR System			
92	N60258	Manifold Assembly (See page 16-24)	1
93	**N72140**	**Hydraulic Motor - Danfoss OMPX-80 - 2021 to present (See Page 16-49)**	1
94	C15348	Connector - 9/16-18 (#06) MJIC x 3/4-16 (#08) MORB	4
	N65810	45 Elbow - 9/16-18 (#06) MJIC x 3/4-16 (#08) MORB	
95	N49460	Connector - Swivel - 7/8-14 (#10) FJIC x 3/4-16 (#08) MORB	8
96	C14840	Connector - 7/8-14 (#10) MJIC x 3/4-16 (#08) MORB	1
	C26333	**45 Elbow - 7/8-14 (#10) MJIC x 3/4-16 (#08) MORB**	
97	N34505	Connector - 7/8-14 (#10) MJIC x 7/8-14 (#10) MORB	8
98	F10384	Connector - 7/8-14 (#10) FJIC x 9/16-18 (#06) MJIC	2
99	C-4469	Connector - 7/8-14 MJIC	2
	C44003	Plug - 7/8-14 MJIC	2
100	N64050	90 Elbow - 9/16-18 (#06) MJIC x 3/4-16 (#08) MORB	3
	N51990	45 Elbow - 3/4-16 MJIC x 7/8-14 MORB	
101	H18746	Tee - Swivel - (1) - 7/8-14 FJIC x (2) - 7/8-14 MJIC	2
		9800	
102	**S42969**	**Hyd Hose - 3/8 x 36 Lg w/ #6 9/16-18 FJIC**	**1**
103	**N53696**	**Hyd Hose - 3/8 x 66 Lg - #6 9/16-18 FJIC**	**1**
104	**S65380**	**Hyd Hose - 3/8 x 45 Lg - #6 9/16-18 FJIC**	**1**
105	**N53696**	**Hyd Hose - 3/8 x 66 Lg - #6 9/16-18 FJIC**	**1**
		9680	
102	**N53696**	**Hyd Hose - 3/8 x 66 Lg - #6 9/16-18 FJIC**	**1**
104	**N53696**	**Hyd Hose - 3/8 x 66 Lg - #6 9/16-18 FJIC**	**1**
105	**N53696**	**Hyd Hose - 3/8 x 66 Lg - #6 9/16-18 FJIC**	**1**
		9555	
102	**S65380**	**Hyd Hose - 3/8 x 45 Lg - #6 9/16-18 FJIC - VR**	**1**
	S42969	**Hyd Hose - 3/8 x 36 Lg w/ #6 9/16-18 FJIC - ICT**	**1**
105	**N53696**	**Hyd Hose - 3/8 x 66 Lg - #6 9/16-18 FJIC**	**1**
106	N69202	Mount Bracket	1
107	W-475	Hex Bolt - 3/8 x 1	3
108	N25457	U-Bolt - 3/8 x 4 x 8	3
109	W-523	Lock Washer 3/8	11
110	W-514	Hex Nut 3/8	8
	N19023	Decal - Danger "HOT" (Not Shown)	1
	N36263	Decal - Warning "BURN HAZARD" (Not Shown)	1
	N36443	Decal - Auger "LEVER POSITION" (Not Shown)	1
	N19031	Decal - "AUGER / FAN" (Not Shown)	1
	N49783	Decal - "CALIBRAITON / FAN" (Not Shown)	1

- June 2018 to Present -

Dual Flow Hydraulics - 12” Auger - Option
9800 Tow Between - VR Drive - Dual Fans

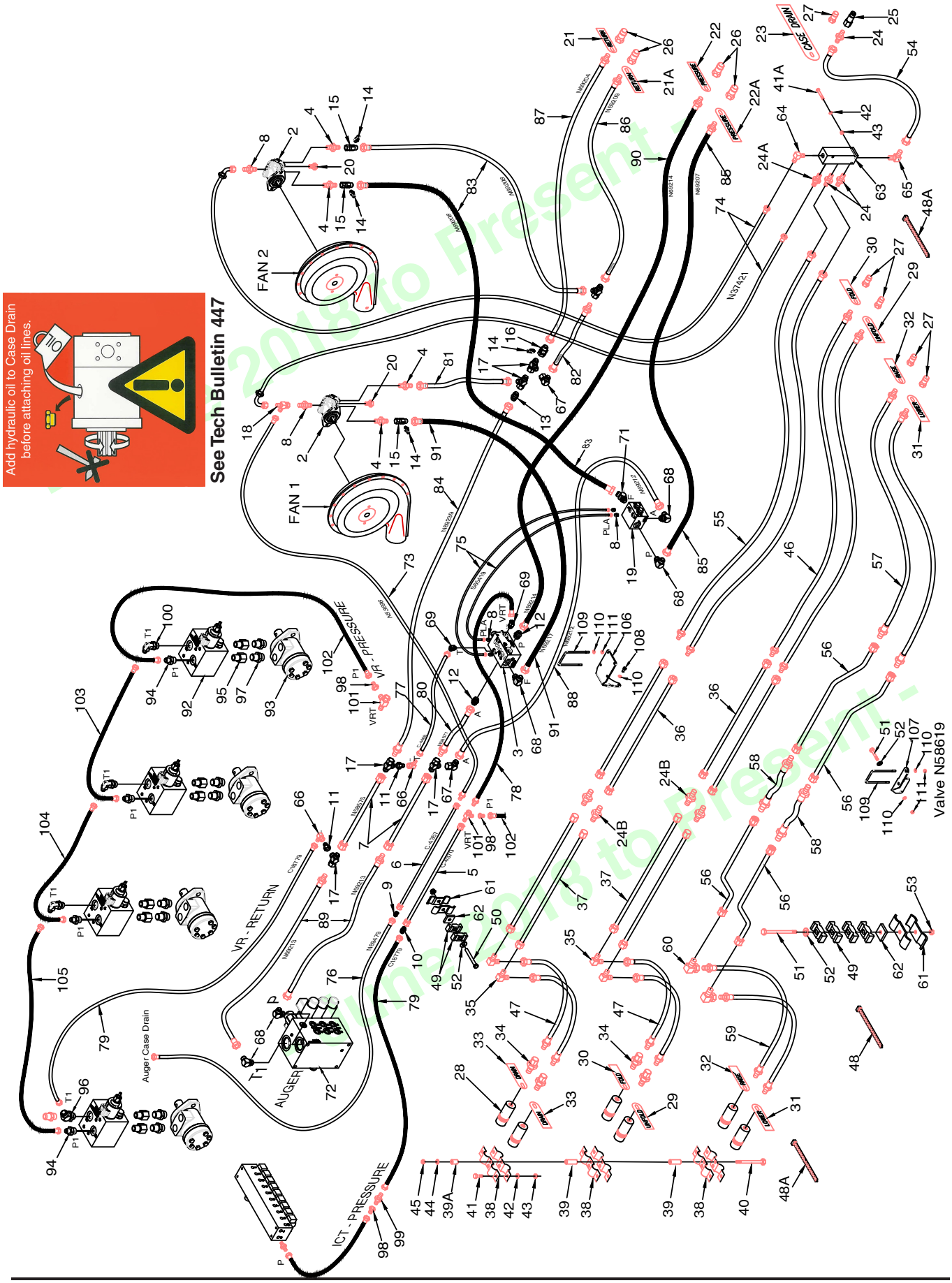

Auger Dual Flow Hydraulics - 9800 Tow Between - VR Drive - Dual Fans

Item	Part No.	Description	Qty
1	* * * * *	Fan - See Section 11	2
2	N53243	Hydraulic Motor W/ Internal Check Valve - Rexroth - See Section 11	2
3	N58620	Selector Valve - Dual Flow Auger - **VR Drive**	1
4	N34505	Connector - 7/8-14 (#10) MJIC x 7/8-14 (#10) MORB	2
5	C-4370	Oil Line - 5/8 x 128 Lg w/ 7/8-14 FJIC	1
6	C-4357	Oil Line - 3/8 x 130 1/2 Lg w/ 9/16-18 FJIC	1
7	N58575	Oil Line - 1 x 96 Lg w/ 1 5/16-12 FJIC	2
8	N29358	Connector - 9/16-18 MJIC x 9/16-18 MORB	6
9	H18269	Connector - 9/16-18 MJIC	1
10	C-4469	Connector - 7/8-14 MJIC	1
11	N58642	Connector - 7/8-14 MJIC (#10) x 1 5/16-12 MJIC (#16)	2
12	N58621	Connector - 1 5/16-12 MJIC (#16) x 1 5/16-12 MORB (#16)	2
13	N16346	Connector - 1 5/16-12 MJIC	1
14	N64583	Coupler - Test Port - 7/16-20 (#4) MORB	4
15	K62978	Tee - Gauge Port - 7/8-14 (#10) MJIC x 7/8-14 (#10) FJIC x 7/16-20 (#4) FORB	3
16	N64584	Tee - Gauge Port - 1 5/16-12 (#16) MJIC X 1 5/16-12 (#16) FJIC x 7/16-20 (#4) FORB	1
17	N19336	Tee - Swivel - (1) 1 5/16-12 FJIC x (2) 1 5/16-12 MJIC	6
18	C-4403	Tee - (2) 9/16-18 MJIC x (1) 9/16-18 FJIC	1
19	**N58619**	**Diverter Valve - Dual Flow Auger**	**1**
20	**N29365**	Plug - 9/16-18 MORB	2
21	N34577	Tag - Hose ID Tank - Fan/Auger - RETURN	1
21A	N58341	Tag - Hose ID - Air Tank - Fan 2 - RETURN	1
22	N34576	Tag - Hose ID - Tank - Fan/Auger - PRESSURE	1
22A	N58340	Tag - Hose ID - Air Tank - Fan 2 - PRESSURE	1
23	N34578	Tag - Hose ID - Tank - Fan/Auger - CASE DRAIN	1
24	C14840	Connector - 3/4-16 MORB x 7/8-14 MJIC	2
24A	C15330	Connector - 3/4-16 MORB x 3/4-16 MJIC (10178)	1
24B	C-4469	Connector - 7/8-14 (#10) MJIC	4
25	K50834	3/8 Flat Face Tip - 3/4-16 FORB	1
26	N37914	3/4 Male Pioneer Tip - 1 1/16-12 FORB	4
27	N34498	1/2 Male Pioneer Tip - 7/8-14 FORB	7
28	N34488	1/2 Female Pioneer Coupler - 7/8-14 FORB	6
29	S37662	Tag - Hose ID - Wing Lift - UNFOLD	2
30	S37661	Tag - Hose ID - Wing Lift - FOLD	2
31	S37663	Tag - Hose ID - Depth Control - LOWER	2
32	S37664	Tag - Hose ID - Depth Control - RAISE	2
33	S44456	Tag - Hose ID - Case Drain	1
33A	N59870	Tag - Hose ID - Auxiliary Circuit	1
34	N34620	Connector - 7/8-14 FJIC x 7/8-14 MORB	4
35	H24393	90 Elbow - 7/8-14 MJIC	6
36	N37348	Oil Line - 5/8 x 84 Lg w/ 7/8-14 FJIC	4
37	C-4370	Oil Line - 5/8 x 128 Lg w/ 7/8-14 FJIC	4
38	N16608	Coupler Clamp - Female Pioneer	6
39	N19458	Spacer Bushing - 0.364 ID x 0.540 OD x 2	4
39A	N19155	Spacer Bushing - 0.385 ID x 0.625 OD x 1/2	2
40	S13337	Hex Bolt - 5/16 x 6 Lg	2
41	W-469	Hex Bolt - 1/4 x 3/4 Lg	6
41A	C15319	Hex Bolt - 1/4 x 2 1/2 Lg	3
42	W-521	Lockwasher - 1/4	9
43	W-512	Hex Nut - 1/4	9
44	W-522	Lockwasher - 5/16	2
45	W-513	Hex Nut - 5/16	2
46	N37403	Hyd Hose - 1/2 x 192 Lg - 7/8-14 MJIC x 7/8-14 MORB	2
47	C-4387	Hyd Hose - 1/2 x 36 Lg w/7/8-14 MJIC x 7/8-14 FJIC Swivel	4
48	D-4838	Tie Strap - 14 1/2 Lg	15
48A	D-4951	Tie Strap - 7 3/8 Lg	15
48B	S13336	Tie Strap - 24 Lg	3
49	C-4698	Nylon Oil Line Clamp (STD-4) (Tillage-24)	30
50	S-1299	Hex Bolt - 3/8 x 4 1/2 Lg	3
51	C-3664	Hex Bolt - 3/8 x 5 1/2 Lg	6
52	W-538	Flatwasher - 3/8	7
53	M-3388	Locknut - 3/8	7
54	F-4565	Hyd Hose - 1/2 x 60 Lg w/7/8-14 FJIC	1
55	S22403	Hyd Hose - 1/2 x 120 Lg - 7/8-14 FJIC	2
56	N36833	Oil Line - 1 x 94 Lg w/ 1 5/16-12 FJIC (#16)	4
57	N58170	Hyd Hose - 3/4 x 192 Lg - 1 5/16-12 MJIC (#16) x 7/8-14 MORB (#10)	2
58	N58168	Hyd Hose - 3/4 x 36 Lg - 1 5/16-12 MJIC Ends	2
59	N58169	Hyd Hose - 3/4 x 36 Lg - 1 5/16 -12 MJIC (#16) x 7/8 -14 MORB	2
60	N58171	90 Elbow - 1 5/16-12 MJIC x 1 5/16-12 FJIC Swivel	2
61	D-4808	Oil Line Clamp	8
62	S31476	Plate Spacer - 1 1/2 x 1 1/2 x 1/2 thick	4
63	N58670	Case Drain Header	1
64	C15317	90 Elbow - 3/4-16 MJIC x 3/4-16 MORB	1
65	N34646	90 Elbow - 7/8-14 MJIC x 1 1/16-12 MORB	1
66	K-5806	90 Elbow - Swivel - 7/8-14 MJIC x 7/8-14 FJIC	2

- June 2019 to Present -

Auger Dual Flow Hydraulics - 9800 Tow Between - VR Drive - Dual Fans

Item	Part No.	Description	Qty
67	N58616	90 Elbow - 1 5/16-12 MJIC (#16) x 1 5/16-12 FJIC (#16)	2
68	N58576	90 Elbow - 1 5/16-12 MJIC (#16) x 1 5/16-12 MORB (#16)	5
69	C26333	45 Elbow - 7/8-14 MJIC x 3/4-16 MORB	2
70	N49599	45 Elbow - 7/8-14 MJIC x 7/8-14 MORB	2
71	N58577	45 Elbow - 1 5/16-12 (#16) MJIC x 1 5/16-12 (#16) MORB	1
72	**N58349**	**Valve - Solenoid - Hydraulic Assist Auger - 45 gpm**	**1**
73	N53696	Hyd Hose - 3/8 x 66 Lg w/9/16-18 FJIC	1
74	N37421	Hyd Hose - 3/8 x 108 - 3/4-16 FJIC x 9/16-18 FJIC w/90 Bend	2
75	S65419	Hyd Hose - 3/8 x 120 Lg - #6 9/16-18 FJIC Ends	2
76	N69479	Hyd Hose - 3/8 x 290 Lg w/ #6 9/16-18 FJIC	1
77	C-4468	Hyd Hose - 1/2 x 24 Lg w/7/8-14 FJIC	1
78	C-4385	Hyd Hose - 1/2 x 24 Lg w/7/8-14 MJIC x 7/8-14 FJIC	1
79	C18779	Hyd Hose - 1/2 x 72 Lg w/7/8-14 FJIC	2
80	N58677	Hyd Hose - 3/4 x 14 Lg - 1 5/16-12 MJIC x 1 5/16-12 FJIC swivel	2
81	N69691	Hyd Hose - 3/4 x 18 Lg - 1 5/16-12 FJIC (#16) x 7/8-14 FJIC (#10)	1
82	N58681	Hyd Hose - 3/4 x 24 Lg - 1 5/16-12 FJIC swivel ends	1
83	N69208	Hyd Hose - 3/4 x 32 Lg - 1 5/16-12 FJIC (#16) x 7/8-14 FJIC (#10)	2
84	N69239	Hyd Hose - 3/4 x 78 Lg - 1 5/16-12 FJIC (#16) x 1 5/16-12 MJIC (#16)	1
85	N69207	Hyd Hose - 3/4 x 95 Lg - 1 5/16-12 FJIC (#16) x 1 1/16-12 MORB (#12)	1
86	N69209	Hyd Hose - 3/4 x 106 Lg - 1 5/16-12 FJIC (#16) x 1 1/16-12 MORB (#12)	1
87	N69204	Hyd Hose - 3/4 x 134 Lg - 1 5/16-12 FJIC (#16) x 1 1/16-12 MORB (#12)	1
88	N69212	Hyd Hose - 3/4 x 120 Lg - 1 5/16-12 FJIC (#16)	1
89	N69213	Hyd Hose - 3/4 x 62 Lg - 1 5/16-12 FJIC (#16) x 1 5/16-12 MJIC (#16)	2
90	N69214	Hyd Hose - 3/4 x 185 Lg - 1 5/16-12 FJIC (#16) x 1 1/16-12 MORB (#12)	1
91	N69217	Hyd Hose - 3/4 x 62 Lg - 1 5/16-12 FJIC (#16) x 7/8-14 FJIC (#10)	1
VR System			
92	N60258	Manifold Assembly (See page 16-24)	1
93	**N72140**	**Hydraulic Motor - Danfoss OMPX-80 - 2021 to present (See Page 16-49)**	1
94	C15348	Connector - 9/16-18 (#06) MJIC x 3/4-16 (#08) MORB	4
	N65810	45 Elbow - 9/16-18 (#06) MJIC x 3/4-16 (#08) MORB	
95	N49460	Connector - Swivel - 7/8-14 (#10) FJIC x 3/4-16 (#08) MORB	8
96	C14840	Connector - 7/8-14 (#10) MJIC x 3/4-16 (#08) MORB	1
	C26333	**45 Elbow - 7/8-14 (#10) MJIC x 3/4-16 (#08) MORB**	
97	N34505	Connector - 7/8-14 (#10) MJIC x 7/8-14 (#10) MORB	8
98	F10384	Connector - 7/8-14 (#10) FJIC x 9/16-18 (#06) MJIC	2
99	C-4469	Connector - 7/8-14 MJIC	2
	C44003	Plug - 7/8-14 MJIC	2
100	N64050	90 Elbow - 9/16-18 (#06) MJIC x 3/4-16 (#08) MORB	3
	N51990	45 Elbow - 3/4-16 MJIC x 7/8-14 MORB	
101	H18746	Tee - Swivel - (1) - 7/8-14 FJIC x (2) - 7/8-14 MJIC	2
		9800	
102	**S42969**	**Hyd Hose - 3/8 x 36 Lg w/ #6 9/16-18 FJIC**	**1**
103	**N53696**	**Hyd Hose - 3/8 x 66 Lg - #6 9/16-18 FJIC**	**1**
104	**S65380**	**Hyd Hose - 3/8 x 45 Lg - #6 9/16-18 FJIC**	**1**
105	**N53696**	**Hyd Hose - 3/8 x 66 Lg - #6 9/16-18 FJIC**	**1**
		9680	
102	**N53696**	**Hyd Hose - 3/8 x 66 Lg - #6 9/16-18 FJIC**	**1**
104	**N53696**	**Hyd Hose - 3/8 x 66 Lg - #6 9/16-18 FJIC**	**1**
105	**N53696**	**Hyd Hose - 3/8 x 66 Lg - #6 9/16-18 FJIC**	**1**
		9555	
102	**S65380**	**Hyd Hose - 3/8 x 45 Lg - #6 9/16-18 FJIC - VR**	**1**
	S42969	**Hyd Hose - 3/8 x 36 Lg w/ #6 9/16-18 FJIC - ICT**	**1**
105	**N53696**	**Hyd Hose - 3/8 x 66 Lg - #6 9/16-18 FJIC**	**1**
106	**N69202**	**Mount Bracket**	**1**
107	**N58643**	**Mount Bracket**	**1**
108	**W-475**	**Hex Bolt - 3/8 x 1**	**3**
109	**N25457**	**U-Bolt - 3/8 x 4 x 8**	**3**
110	**W-523**	**Lock Washer 3/8**	**11**
111	**W-514**	**Hex Nut 3/8**	**8**
	N19023	Decal - Danger "HOT" (Not Shown)	1
	N36263	Decal - Warning "BURN HAZARD" (Not Shown)	1
	N36443	Decal - Auger "LEVER POSITION" (Not Shown)	1
	N19031	Decal - "AUGER / FAN" (Not Shown)	1
	N49783	Decal - "CALIBRAITON / FAN" (Not Shown)	1

- June 2018 to Present -

Dual Flow Hydraulic - Converyor - Option
9800 and 91000 Tow Behind - VR Drive - Single Fan

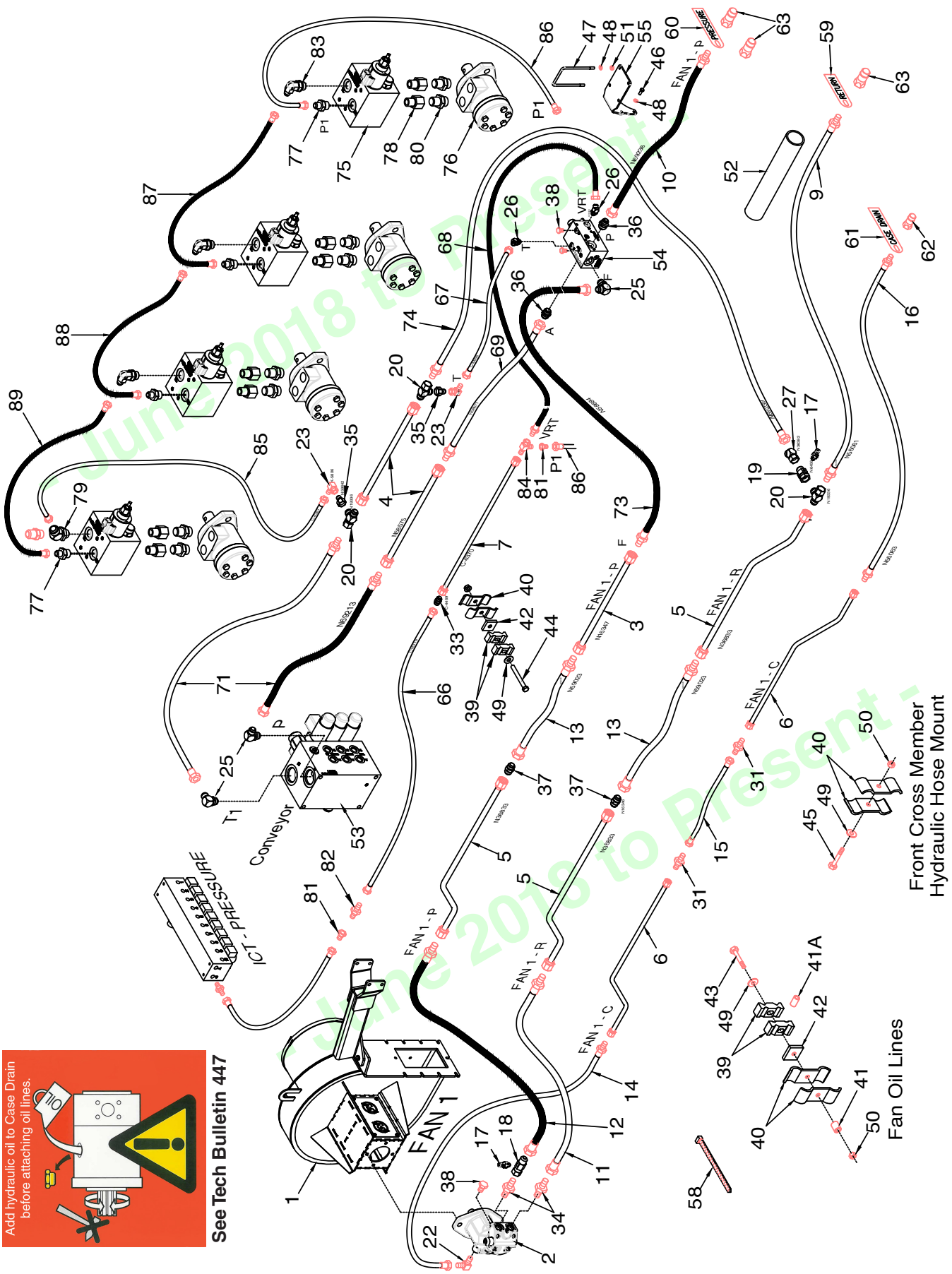

Converyor Dual Flow Hydraulic - 9800 and 91000 Tow Behind - VR Drive - Single Fan

Item	Part No.	Description	Qty
Cart System			
1	* * * * *	Fan - See Section 11	1
2	N53243	Hydraulic Motor W/ Internal Check Valve - Rexroth - See Section 11	1
3	N16347	Oil Line - 1 x 72 Lg -1 5/16-12 FJIC (#16)	1
4	N58575	Oil Line - 1 x 96 Lg - 1 5/16-12 FJIC (#16)	2
5	N36833	Oil Line - 1 x 94 Lg - 6 Offset Bend x 1 5/16-12 FJIC (#16)	3
6	N36444	Oil Line - 1/2 x 94 Lg - 6 Offset Bend x 3/4-16 FJIC	2
7	C-4370	Oil Line - 5/8 x 128 Lg - 7/8-14 FJIC	1
8	* * * * *		
9	N56061	Hyd Hose - 3/4 x 330 Lg - 1 5/16-12 MJIC (#16) x 1 1/16-12 MORB (#12)	1
10	N69238	Hyd Hose - 3/4 x 330 Lg - 1 5/16-12 FJIC (#16) x 1 1/16-12 MORB (#12)	1
11	N53493	Hyd Hose - 3/4 x 48 Lg - 1 5/16-12 MJIC x 7/8-14 FJIC - (Fan 1)	1
12	N53495	Hyd Hose - 3/4 x 54 Lg - 1 5/16-12 MJIC x 7/8-14 FJIC - (Fan 1)	1
13	N59023	Hyd Hose - 3/4 x 48 Lg - 1 5/16-12 MJIC x 1 5/16-12 FJIC swivel	2
14	N19475	Hyd Hose - 3/8 x 48 Lg - 9/16-18 FJIC x 3/4-16 MJIC - (Fan 1)	1
15	D10821	Hyd Hose - 3/8 x 38 Lg - 3/4-16 FJIC	1
16	N56063	Hyd Hose - 3/8 x 330 Lg - 3/4-16 MJIC x 7/8-14 MORB	1
17	N64583	Coupler - Test Port - 7/16-20 (#4) MORB	2
18	K62978	Tee - Gauge Port - 7/8-14 (#10) MJIC x 7/8-14 (#10) FJIC x 7/16-20 (#4) FORB	1
19	N64584	Tee - Gauge Port - 1 5/16-12 (#16) MJIC X 1 5/16-12 (#16) FJIC x 7/16-20 (#4) FORB	1
20	N19336	Tee - Swivel - (1) 1 5/16-12 FJIC x (2) 1 5/16-12 MJIC	3
21	* * * * *		
22	N16143	90 Elbow - Swivel - 9/16-18 MJIC x 9/16-18 MORB	1
23	K-5806	90 Elbow - Swivel - 7/8-14 MJIC x 7/8-14 FJIC	2
24	* * * * *		
25	N58576	90 Elbow - 1 5/16-12 MJIC (#16) x 1 5/16-12 MORB (#16)	3
26	C26333	45 Elbow - 7/8-14 (#10) MJIC x 3/4-16 (#08) MORB	2
27	N36382	45 Elbow - Swivel - 1 5/16-12 FJIC (#16) x 1 5/16-12 MJIC (#16)	1
28	* * * * *		
29	* * * * *		
30	* * * * *		
31	N25754	Connector - 3/4-16 MJIC	2
32	* * * * *		
33	C-4469	Connector - 7/8-14 MJIC (#10)	1
34	N34505	Connector - 7/8-14 (#10) MJIC x 7/8-14 (#10) MORB	2
35	N58642	Connector - 7/8-14 MJIC (#10) x 1 5/16-12 MJIC (#16)	2
36	N58621	Connector - 1 5/16-12 MJIC (#16) x 1 5/16-12 MORB (#16)	2
37	N16346	Connector - 1 5/16-12 MJIC (#16)	2
38	N29365	Plug - 9/16-18 MORB	3
39	C-4698	Nylon Oil Line Clamp	12
40	D-4808	Oil Line Clamp	14
41	N16257	Oil Line Spacer - 3/8 ID x 5/8 OD x 5/8 Lg	4
41A	N21632	Oil Line Spacer - 3/8 ID x 9/16 OD x 3/4 Lg	4
42	S31476	Plate Spacer - 1/2	6
43	C-1550	Hex Bolt - 3/8 x 4 Lg	4
44	S-1299	Hex Bolt - 3/8 x 4 1/2 Lg	2
45	W-477	Hex Bolt - 3/8 x 1 1/2 Lg	1
46	W-475	Hex Bolt - 3/8 x 1	3
47	N25457	U-Bolt - 3/8 x 4 x 8	2
48	W-523	Lock Washer 3/8	7
49	W-538	Flatwasher - 3/8	7
50	M-3388	Locknut - 3/8	8
51	W-514	Hex Nut 3/8	4
52	N62246	Hydraulic Hose Sleeve - 3” Dia x 36” Lg	1
53	N58349	Auger - Valve - Solenoid - Hydraulic Assist Auger - 45 gpm	1
54	N58620	Selector Valve - Dual Flow Auger - VR Drive	1
55	N69202	Mount Bracket	1
56	* * * * *		
57	* * * * *		
58	D-4838	Tie Strap - 14 1/2 Lg	16
	D-4951	Tie Strap - 7 3/8 Lg	9

- June 2018 to Present -

Converyor Dual Flow Hydraulic - 9800 and 91000 Tow Behind - VR Drive - Single Fan

Item	Part No.	Description	Qty
59	N34577	Tag - Hose ID Tank - Fan/Auger - RETURN	1
60	N34576	Tag - Hose ID - Tank - Fan/Auger - PRESSURE	1
61	N34578	Tag - Hose ID - Tank - Fan/Auger - CASE DRAIN	1
62	N34498	1/2 Male Pioneer Tip - 7/8-14 FORB (Cart - 1)	1
63	N37914	3/4 Male Pioneer Tip - 1 1/16-12 FORB (Cart - 2)	2
64	* * * * *		
65	* * * * *		
66	C18779	Hyd Hose - 1/2 x 72 Lg w/7/8-14 FJIC	1
67	C-4468	Hyd Hose - 1/2 x 24 Lg w/7/8-14 FJIC	1
68	C-4385	Hyd Hose - 1/2 x 24 Lg w/7/8-14 MJIC x 7/8-14 FJIC	1
69	N58677	Hyd Hose - 3/4 x 14 Lg - 1 5/16-12 MJIC x 1 5/16-12 FJIC swivel	1
70	* * * * *		
71	N69213	Hyd Hose - 3/4 x 62 Lg - 1 5/16-12 FJIC (#16) x 1 5/16-12 MJIC (#16)	2
72	* * * * *		
73	N58684	Hyd Hose - 3/4 x 72 Lg - 1 5/16-12 MJIC x 1 5/16-12 FJIC swivel end	1
74	N69239	Hyd Hose - 3/4 x 78 Lg - 1 5/16-12 FJIC (#16) x 1 5/16-12 MJIC (#16)	1
VR System			
75	N60258	Manifold Assembly (See page 16-24)	1
76	N72140	Hydraulic Motor - Danfoss OMPX-80 - 2021 to present (See Page 16-49)	1
77	C15348	Connector - 9/16-18 (#06) MJIC x 3/4-16 (#08) MORB	4
	N65810	45 Elbow - 9/16-18 (#06) MJIC x 3/4-16 (#08) MORB	
78	N49460	Connector - Swivel - 7/8-14 (#10) FJIC x 3/4-16 (#08) MORB	8
79	C14840	Connector - 7/8-14 (#10) MJIC x 3/4-16 (#08) MORB	1
	C26333	45 Elbow - 7/8-14 (#10) MJIC x 3/4-16 (#08) MORB	
80	N34505	Connector - 7/8-14 (#10) MJIC x 7/8-14 (#10) MORB	8
81	F10384	Connector - 7/8-14 (#10) FJIC x 9/16-18 (#06) MJIC	2
82	C-4469	Connector - 7/8-14 MJIC	2
	C44003	Plug - 7/8-14 MJIC	
83	N64050	90 Elbow - 9/16-18 (#06) MJIC x 3/4-16 (#08) MORB	3
	N51990	45 Elbow - 3/4-16 MJIC x 7/8-14 MORB	
84	H18746	Tee - Swivel - (1) - 7/8-14 FJIC x (2) - 7/8-14 MJIC	2
85	C-4387	Hyd Hose - 1/2 x 36 Lg w/7/8-14 MJIC x 7/8-14 FJIC	1
		9800	
86	S42969	Hyd Hose - 3/8 x 36 Lg w/ #6 9/16-18 FJIC	1
87	N53696	Hyd Hose - 3/8 x 66 Lg - #6 9/16-18 FJIC	1
88	S65380	Hyd Hose - 3/8 x 45 Lg - #6 9/16-18 FJIC	1
89	N53696	Hyd Hose - 3/8 x 66 Lg - #6 9/16-18 FJIC	1
		9680	
86	N53696	Hyd Hose - 3/8 x 66 Lg - #6 9/16-18 FJIC	1
88	N53696	Hyd Hose - 3/8 x 66 Lg - #6 9/16-18 FJIC	1
89	N53696	Hyd Hose - 3/8 x 66 Lg - #6 9/16-18 FJIC	1
		9555	
86	S65380	Hyd Hose - 3/8 x 45 Lg - #6 9/16-18 FJIC - VR	1
	S42969	Hyd Hose - 3/8 x 36 Lg w/ #6 9/16-18 FJIC - ICT	1
89	N53696	Hyd Hose - 3/8 x 66 Lg - #6 9/16-18 FJIC	1
	N19023	Decal - Danger "HOT" (Not Shown)	1
	N36263	Decal - Warning "BURN HAZARD" (Not Shown)	1
	N36443	Decal - Auger "LEVER POSITION" (Not Shown)	1
	N71598	Decal - "AUGER / FAN / "CALIBRAITON" (Not Shown)	1

- June 2018 to Present -

Dual Flow Hydraulic - Converyor - Option
9800 and 91000 Tow Behind - VR Drive - Dual Fan

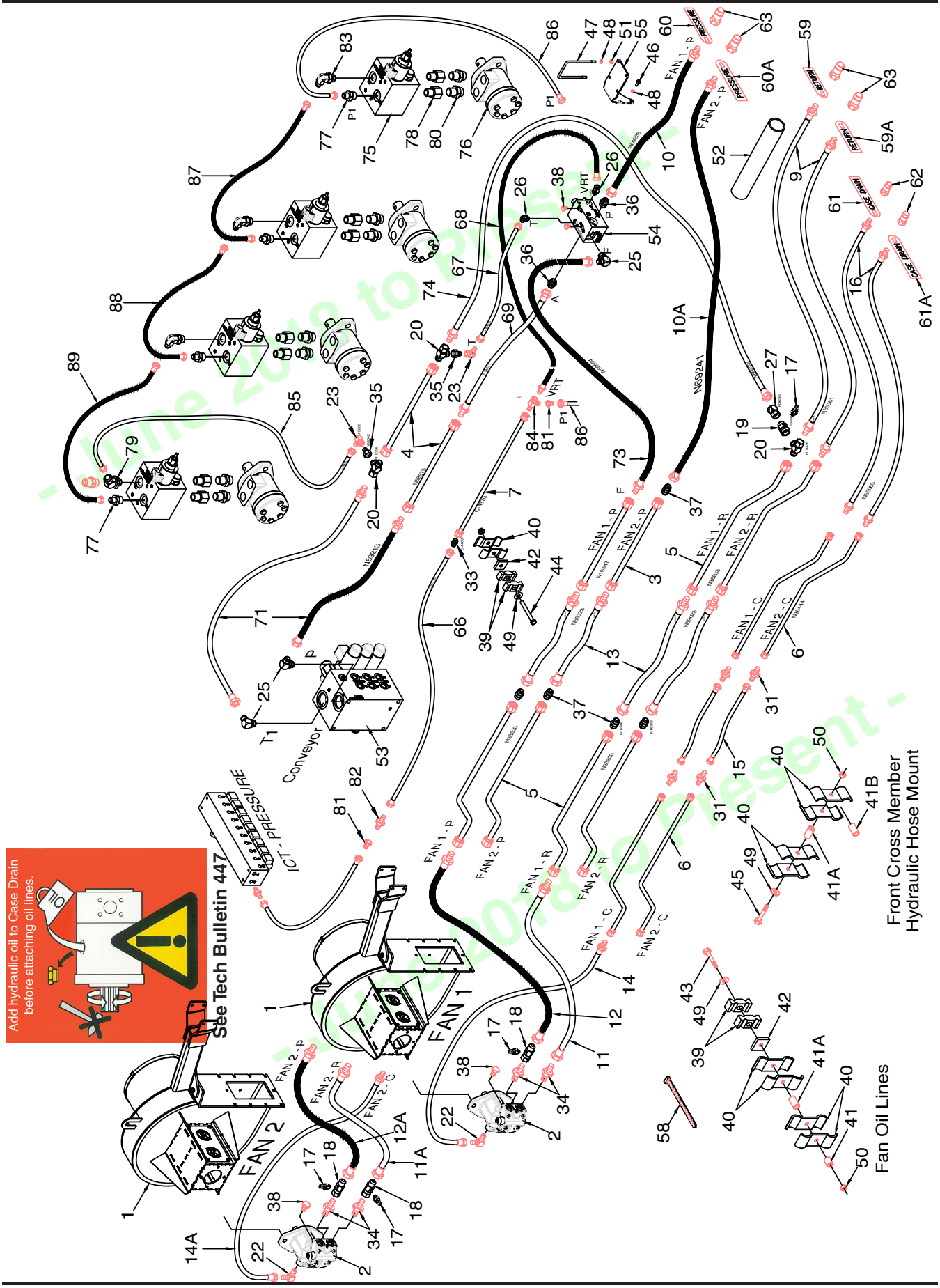

Converyor Dual Flow Hydraulic - 9800 and 91000 Tow Behind - VR Drive - Dual Fan

Item	Part No.	Description	Qty
Cart System			
1	* * * * *	Fan - See Section 11	2
2	N53243	Hydraulic Motor W/ Internal Check Valve - Rexroth - See Section 11	2
3	N16347	Oil Line - 1 x 72 Lg -1 5/16-12 FJIC (#16)	2
4	N58575	Oil Line - 1 x 96 Lg - 1 5/16-12 FJIC (#16)	2
5	N36833	Oil Line - 1 x 94 Lg - 6 Offset Bend x 1 5/16-12 FJIC (#16)	6
6	N36444	Oil Line - 1/2 x 94 Lg - 6 Offset Bend x 3/4-16 FJIC	4
7	C-4370	Oil Line - 5/8 x 128 Lg - 7/8-14 FJIC	1
8	* * * * *		
9	**N56061**	**Hyd Hose - 3/4 x 330 Lg - 1 5/16-12 MJIC (#16) x 1 1/16-12 MORB (#12)**	**2**
10	N69238	Hyd Hose - 3/4 x 330 Lg - 1 5/16-12 FJIC (#16) x 1 1/16-12 MORB (#12)	1
10A	**N69241**	**Hyd Hose - 3/4 x 354 Lg - 1 5/16-12 FJIC (#16) x 1 1/16-12 MORB (#12)**	**1**
11	N53493	Hyd Hose - 3/4 x 48 Lg - 1 5/16-12 MJIC x 7/8-14 FJIC - (Fan 1)	1
11A	N53247	Hyd Hose - 3/4 x 72 Lg - 1 5/16-12 MJIC x 7/8-14 FJIC - (Fan 2)	1
12	N53495	Hyd Hose - 3/4 x 54 Lg - 1 5/16-12 MJIC x 7/8-14 FJIC - (Fan 1)	1
12A	N53249	Hyd Hose - 3/4 x 78 Lg - 1 5/16-12 MJIC x 7/8-14 FJIC - (Fan 2)	1
13	N59023	Hyd Hose - 3/4 x 48 Lg - 1 5/16-12 MJIC x 1 5/16-12 FJIC swivel	4
14	N19475	Hyd Hose - 3/8 x 48 Lg - 9/16-18 FJIC x 3/4-16 MJIC - (Fan 1)	1
14A	N53492	Hyd Hose - 3/8 x 72 Lg - 9/16-18 FJIC x 3/4-16 MJIC - (Fan 2)	1
15	D10821	Hyd Hose - 3/8 x 38 Lg - 3/4-16 FJIC	2
16	**N56063**	**Hyd Hose - 3/8 x 330 Lg - 3/4-16 MJIC x 7/8-14 MORB**	**2**
17	N64583	Coupler - Test Port - 7/16-20 (#4) MORB	4
18	K62978	Tee - Gauge Port - 7/8-14 (#10) MJIC x 7/8-14 (#10) FJIC x 7/16-20 (#4) FORB	3
19	N64584	Tee - Gauge Port - 1 5/16-12 (#16) MJIC X 1 5/16-12 (#16) FJIC x 7/16-20 (#4) FORB	1
20	N19336	Tee - Swivel - (1) 1 5/16-12 FJIC x (2) 1 5/16-12 MJIC	3
21	* * * * *		
22	N16143	90 Elbow - Swivel - 9/16-18 MJIC x 9/16-18 MORB	1
23	K-5806	90 Elbow - Swivel - 7/8-14 MJIC x 7/8-14 FJIC	2
24	* * * * *		
25	**N58576**	**90 Elbow - 1 5/16-12 MJIC (#16) x 1 5/16-12 MORB (#16)**	**3**
26	C26333	45 Elbow - 7/8-14 (#10) MJIC x 3/4-16 (#08) MORB	2
27	N36382	45 Elbow - Swivel - 1 5/16-12 FJIC **(#16)** x 1 5/16-12 MJIC **(#16)**	1
28	* * * * *		
29	* * * * *		
30	* * * * *		
31	**N25754**	**Connector - 3/4-16 MJIC**	**4**
32	* * * * *		
33	C-4469	Connector - 7/8-14 MJIC (#10)	1
34	N34505	Connector - 7/8-14 (#10) MJIC x 7/8-14 (#10) MORB	4
35	N58642	Connector - 7/8-14 MJIC (#10) x 1 5/16-12 MJIC (#16)	2
36	N58621	Connector - 1 5/16-12 MJIC (#16) x 1 5/16-12 MORB (#16)	2
37	**N16346**	**Connector - 1 5/16-12 MJIC (#16)**	**5**
38	**N29365**	Plug - 9/16-18 MORB	4
39	C-4698	Nylon Oil Line Clamp	12
40	D-4808	Oil Line Clamp	24
41	N16257	Oil Line Spacer - 3/8 ID x 5/8 OD x 5/8 Lg	4
41A	N15559	Oil Line Spacer - 3/8 ID x 5/8 OD x 1 Lg	5
41B	D-5011	Oil Line Spacer - 21/32 ID x 1 OD x 1 9/16 Lg	1
42	S31476	Plate Spacer - 1/2	6
43	C-3664	Hex Bolt - 3/8 x 5 1/2 Lg	4
44	S-1299	Hex Bolt - 3/8 x 4 1/2 Lg	2
45	D-5249	Hex Bolt - 3/8 x 3 1/4 Lg	1
46	W-475	Hex Bolt - 3/8 x 1	3
47	N25457	U-Bolt - 3/8 x 4 x 8	2
48	W-523	Lock Washer 3/8	9
49	W-538	Flatwasher - 3/8	9
50	M-3388	Locknut - 3/8	8
51	W-514	Hex Nut 3/8	4
52	N62246	Hydraulic Hose Sleeve - 3” Dia x 36” Lg	1
53	N58349	Auger - Valve - Solenoid - Hydraulic Assist Auger - 45 gpm	1
54	**N58620**	**Selector Valve - Dual Flow Auger - VR Drive**	**1**
55	N69202	Mount Bracket	1
56	* * * * *		
57	* * * * *		

- June 2018 to Present -

Converyor Dual Flow Hydraulic - 9800 and 91000 Tow Behind - VR Drive - Dual Fan

Item	Part No.	Description	Qty
58	D-4838	Tie Strap - 14 1/2 Lg	16
	D-4951	Tie Strap - 7 3/8 Lg	9
59	N34577	Tag - Hose ID Tank - Fan/Auger - RETURN	1
59A	N58341	Tag - Hose ID - Air Tank - Fan 2 - RETURN	1
60	N34576	Tag - Hose ID - Tank - Fan/Auger - PRESSURE	1
60A	N58340	Tag - Hose ID - Air Tank - Fan 2 - PRESSURE	1
61	N34578	Tag - Hose ID - Tank - Fan/Auger - CASE DRAIN	1
61A	N58342	Tag - Hose ID - Tank - Fan 2 - CASE DRAIN	1
62	N34498	1/2 Male Pioneer Tip - 7/8-14 FORB	2
63	N37914	3/4 Male Pioneer Tip - 1 1/16-12 FORB	4
64	* * * * *		
65	* * * * *		
66	C18779	Hyd Hose - 1/2 x 72 Lg w/7/8-14 FJIC	1
67	C-4468	Hyd Hose - 1/2 x 24 Lg w/7/8-14 FJIC	1
68	C-4385	Hyd Hose - 1/2 x 24 Lg w/7/8-14 MJIC x 7/8-14 FJIC	1
69	N58677	Hyd Hose - 3/4 x 14 Lg - 1 5/16-12 MJIC x 1 5/16-12 FJIC swivel	1
70	* * * * *		
71	N69213	Hyd Hose - 3/4 x 62 Lg - 1 5/16-12 FJIC (#16) x 1 5/16-12 MJIC (#16)	2
72	* * * * *		
73	N58684	Hyd Hose - 3/4 x 72 Lg - 1 5/16-12 MJIC x 1 5/16-12 FJIC swivel end	1
74	N69239	Hyd Hose - 3/4 x 78 Lg - 1 5/16-12 FJIC (#16) x 1 5/16-12 MJIC (#16)	1
VR System			
75	N60258	Manifold Assembly (See page 16-24)	1
76	**N72140**	**Hydraulic Motor - Danfoss OMPX-80 - 2021 to present (See Page 16-49)**	1
77	C15348	Connector - 9/16-18 (#06) MJIC x 3/4-16 (#08) MORB	4
	N65810	45 Elbow - 9/16-18 (#06) MJIC x 3/4-16 (#08) MORB	
78	N49460	Connector - Swivel - 7/8-14 (#10) FJIC x 3/4-16 (#08) MORB	8
79	C14840	Connector - 7/8-14 (#10) MJIC x 3/4-16 (#08) MORB	1
	C26333	**45 Elbow - 7/8-14 (#10) MJIC x 3/4-16 (#08) MORB**	
80	N34505	Connector - 7/8-14 (#10) MJIC x 7/8-14 (#10) MORB	8
81	F10384	Connector - 7/8-14 (#10) FJIC x 9/16-18 (#06) MJIC	2
82	C-4469	Connector - 7/8-14 MJIC	2
	C44003	Plug - 7/8-14 MJIC	
83	N64050	90 Elbow - 9/16-18 (#06) MJIC x 3/4-16 (#08) MORB	3
	N51990	45 Elbow - 3/4-16 MJIC x 7/8-14 MORB	
84	H18746	Tee - Swivel - (1) - 7/8-14 FJIC x (2) - 7/8-14 MJIC	2
85	C-4387	Hyd Hose - 1/2 x 36 Lg w/7/8-14 MJIC x 7/8-14 FJIC	1
		9800	
86	**S42969**	**Hyd Hose - 3/8 x 36 Lg w/ #6 9/16-18 FJIC**	**1**
87	**N53696**	**Hyd Hose - 3/8 x 66 Lg - #6 9/16-18 FJIC**	**1**
88	**S65380**	**Hyd Hose - 3/8 x 45 Lg - #6 9/16-18 FJIC**	**1**
89	**N53696**	**Hyd Hose - 3/8 x 66 Lg - #6 9/16-18 FJIC**	**1**
		9680	
86	**N53696**	**Hyd Hose - 3/8 x 66 Lg - #6 9/16-18 FJIC**	**1**
88	**N53696**	**Hyd Hose - 3/8 x 66 Lg - #6 9/16-18 FJIC**	**1**
89	**N53696**	**Hyd Hose - 3/8 x 66 Lg - #6 9/16-18 FJIC**	**1**
		9555	
86	**S65380**	**Hyd Hose - 3/8 x 45 Lg - #6 9/16-18 FJIC - VR**	**1**
	S42969	**Hyd Hose - 3/8 x 36 Lg w/ #6 9/16-18 FJIC - ICT**	**1**
89	**N53696**	**Hyd Hose - 3/8 x 66 Lg - #6 9/16-18 FJIC**	**1**
	N19023	Decal - Danger “HOT” (Not Shown)	1
	N36263	Decal - Warning “BURN HAZARD” (Not Shown)	1
	N36443	Decal - Auger “LEVER POSITION” (Not Shown)	1
	N71598	Decal - “AUGER / FAN / “CALIBRAITON” (Not Shown)	1

- June 2016 to Present -
- June 2018 to Present -

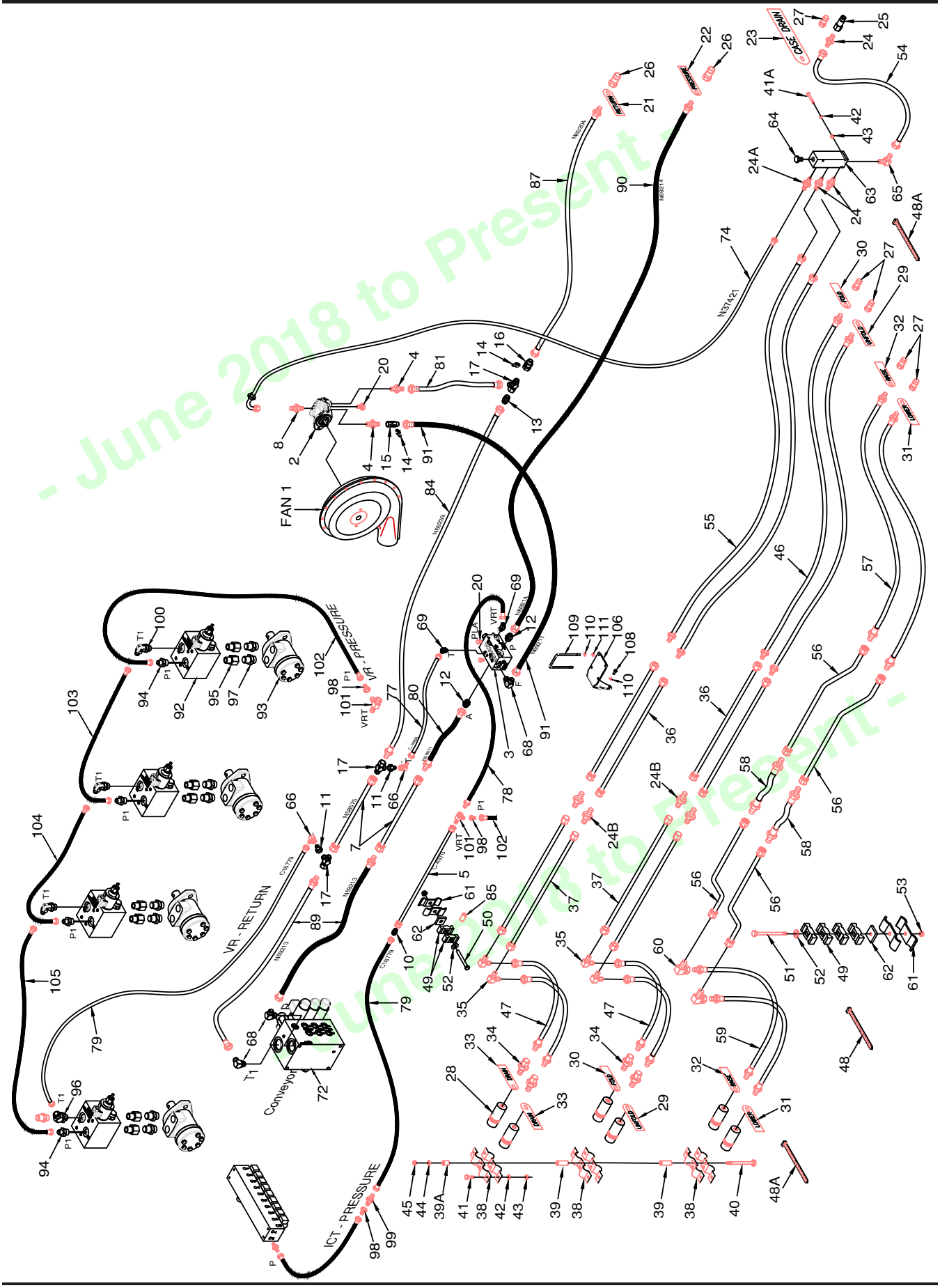
FAN 1
VR - PRESSURE
VR - RETURN
ICT - PRESSURE
Conveyor
CASE DRAIN
- June 2018 to Present -

Converyor Dual Flow Hydraulics - 9800 Tow Between - VR Drive - Single Fans

Item	Part No.	Description	Qty
1	* * * * *	Fan - See Section 11	2
2	N53243	Hydraulic Motor W/ Internal Check Valve - Rexroth - See Section 11	2
3	N58620	Selector Valve - Dual Flow Auger - **VR Drive**	1
4	N34505	Connector - 7/8-14 (#10) MJIC x 7/8-14 (#10) MORB	2
5	C-4370	Oil Line - 5/8 x 128 Lg w/ 7/8-14 FJIC	1
6	* * * * *		
7	N58575	Oil Line - 1 x 96 Lg w/ 1 5/16-12 FJIC	2
8	N29358	Connector - 9/16-18 MJIC x 9/16-18 MORB	2
9	* * * * *		
10	C-4469	Connector - 7/8-14 MJIC	1
11	N58642	Connector - 7/8-14 MJIC (#10) x 1 5/16-12 MJIC (#16)	2
12	N58621	Connector - 1 5/16-12 MJIC (#16) x 1 5/16-12 MORB (#16)	2
13	N16346	Connector - 1 5/16-12 MJIC	1
14	N64583	Coupler - Test Port - 7/16-20 (#4) MORB	2
15	K62978	Tee - Gauge Port - 7/8-14 (#10) MJIC x 7/8-14 (#10) FJIC x 7/16-20 (#4) FORB	1
16	N64584	Tee - Gauge Port - 1 5/16-12 (#16) MJIC X 1 5/16-12 (#16) FJIC x 7/16-20 (#4) FORB	1
17	N19336	Tee - Swivel - (1) 1 5/16-12 FJIC x (2) 1 5/16-12 MJIC	3
18	* * * * *		
19	* * * * *		
20	**N29365**	Plug - 9/16-18 MORB	2
21	N34577	Tag - Hose ID Tank - Fan/Auger - RETURN	1
22	N34576	Tag - Hose ID - Tank - Fan/Auger - PRESSURE	1
23	N34578	Tag - Hose ID - Tank - Fan/Auger - CASE DRAIN	1
24	C14840	Connector - 3/4-16 MORB x 7/8-14 MJIC	2
24A	C15330	Connector - 3/4-16 MORB x 3/4-16 MJIC (10178)	1
24B	C-4469	Connector - 7/8-14 (#10) MJIC	4
25	K50834	3/8 Flat Face Tip - 3/4-16 FORB	1
26	N37914	3/4 Male Pioneer Tip - 1 1/16-12 FORB	2
27	N34498	1/2 Male Pioneer Tip - 7/8-14 FORB	7
28	N34488	1/2 Female Pioneer Coupler - 7/8-14 FORB	6
29	S37662	Tag - Hose ID - Wing Lift - UNFOLD	2
30	S37661	Tag - Hose ID - Wing Lift - FOLD	2
31	S37663	Tag - Hose ID - Depth Control - LOWER	2
32	S37664	Tag - Hose ID - Depth Control - RAISE	2
33	S44456	Tag - Hose ID - Case Drain	1
33A	N59870	Tag - Hose ID - Auxiliary Circuit	1
34	N34620	Connector - 7/8-14 FJIC x 7/8-14 MORB	4
35	H24393	90 Elbow - 7/8-14 MJIC	6
36	N37348	Oil Line - 5/8 x 84 Lg w/ 7/8-14 FJIC	4
37	C-4370	Oil Line - 5/8 x 128 Lg w/ 7/8-14 FJIC	4
38	N16608	Coupler Clamp - Female Pioneer	6
39	N19458	Spacer Bushing - 0.364 ID x 0.540 OD x 2	4
39A	N19155	Spacer Bushing - 0.385 ID x 0.625 OD x 1/2	2
40	S13337	Hex Bolt - 5/16 x 6 Lg	2
41	W-469	Hex Bolt - 1/4 x 3/4 Lg	6
41A	C15319	Hex Bolt - 1/4 x 2 1/2 Lg	3
42	W-521	Lockwasher - 1/4	9
43	W-512	Hex Nut - 1/4	9
44	W-522	Lockwasher - 5/16	2
45	W-513	Hex Nut - 5/16	2
46	N37403	Hyd Hose - 1/2 x 192 Lg - 7/8-14 MJIC x 7/8-14 MORB	2
47	C-4387	Hyd Hose - 1/2 x 36 Lg w/7/8-14 MJIC x 7/8-14 FJIC Swivel	4
48	D-4838	Tie Strap - 14 1/2 Lg	15
48A	D-4951	Tie Strap - 7 3/8 Lg	15
48B	S13336	Tie Strap - 24 Lg	3
49	C-4698	Nylon Oil Line Clamp (STD-4) (Tillage-24)	30
50	S-1299	Hex Bolt - 3/8 x 4 1/2 Lg	3
51	C-3664	Hex Bolt - 3/8 x 5 1/2 Lg	4
52	W-538	Flatwasher - 3/8	5
53	M-3388	Locknut - 3/8	7
54	F-4565	Hyd Hose - 1/2 x 60 Lg w/7/8-14 FJIC	1
55	S22403	Hyd Hose - 1/2 x 120 Lg - 7/8-14 FJIC	2
56	N36833	Oil Line - 1 x 94 Lg w/ 1 5/16-12 FJIC (#16)	4
57	N58170	Hyd Hose - 3/4 x 192 Lg - 1 5/16-12 MJIC (#16) x 7/8-14 MORB (#10)	2
58	N58168	Hyd Hose - 3/4 x 36 Lg - 1 5/16-12 MJIC Ends	2
59	N58169	Hyd Hose - 3/4 x 36 Lg - 1 5/16 -12 MJIC (#16) x 7/8 -14 MORB	2
60	N58171	90 Elbow - 1 5/16-12 MJIC x 1 5/16-12 FJIC Swivel	2
61	D-4808	Oil Line Clamp	8
62	S31476	Plate Spacer - 1 1/2 x 1 1/2 x 1/2 thick	4
63	N58670	Case Drain Header	1
64	**C28505**	**Plug - 3/4-16 MORB**	**1**
65	N34646	90 Elbow - 7/8-14 MJIC x 1 1/16-12 MORB	1
66	K-5806	90 Elbow - Swivel - 7/8-14 MJIC x 7/8-14 FJIC	2

- June 2018 to Present -
- June 2018 to Present -

Converyor Dual Flow Hydraulics - 9800 Tow Between - VR Drive - Single Fans

Item	Part No.	Description	Qty
67			
68	N58576	90 Elbow - 1 5/16-12 MJIC (#16) x 1 5/16-12 MORB (#16)	3
69	C26333	45 Elbow - 7/8-14 MJIC x 3/4-16 MORB	2
70	N49599	45 Elbow - 7/8-14 MJIC x 7/8-14 MORB	2
71	* * * * *		
72	**N58349**	**Valve - Solenoid - Hydraulic Assist Auger - 45 gpm**	**1**
73	* * * * *		
74	N37421	Hyd Hose - 3/8 x 108 - 3/4-16 FJIC x 9/16-18 FJIC w/90 Bend	1
75	* * * * *		
76	* * * * *		
77	C-4468	Hyd Hose - 1/2 x 24 Lg w/7/8-14 FJIC	1
78	C-4385	Hyd Hose - 1/2 x 24 Lg w/7/8-14 MJIC x 7/8-14 FJIC	1
79	C18779	Hyd Hose - 1/2 x 72 Lg w/7/8-14 FJIC	2
80	N58677	Hyd Hose - 3/4 x 14 Lg - 1 5/16-12 MJIC x 1 5/16-12 FJIC swivel	2
81	N69691	Hyd Hose - 3/4 x 18 Lg - 1 5/16-12 FJIC (#16) x 7/8-14 FJIC (#10)	1
82	* * * * *		
83	* * * * *		
84	**N69239**	**Hyd Hose - 3/4 x 78 Lg - 1 5/16-12 FJIC (#16) x 1 5/16-12 MJIC (#16)**	**1**
85	N16257	Oil Line Spacer - 3/8 ID x 5/8 OD x 5/8 Lg	3
86	* * * * *		
87	* * * * *		
88	* * * * *		
89	N69213	Hyd Hose - 3/4 x 62 Lg - 1 5/16-12 FJIC (#16) x 1 5/16-12 MJIC (#16)	2
90	N69214	Hyd Hose - 3/4 x 185 Lg - 1 5/16-12 FJIC (#16) x 1 1/16-12 MORB (#12)	1
91	N69217	Hyd Hose - 3/4 x 62 Lg - 1 5/16-12 FJIC (#16) x 7/8-14 FJIC (#10)	1
VR System			
92	N60258	Manifold Assembly (See page 16-24)	1
93	**N72140**	**Hydraulic Motor - Danfoss OMPX-80 - 2021 to present (See Page 16-49)**	1
94	C15348	Connector - 9/16-18 (#06) MJIC x 3/4-16 (#08) MORB	4
	N65810	45 Elbow - 9/16-18 (#06) MJIC x 3/4-16 (#08) MORB	
95	N49460	Connector - Swivel - 7/8-14 (#10) FJIC x 3/4-16 (#08) MORB	8
96	C14840	Connector - 7/8-14 (#10) MJIC x 3/4-16 (#08) MORB	1
	C26333	**45 Elbow - 7/8-14 (#10) MJIC x 3/4-16 (#08) MORB**	
97	N34505	Connector - 7/8-14 (#10) MJIC x 7/8-14 (#10) MORB	8
98	F10384	Connector - 7/8-14 (#10) FJIC x 9/16-18 (#06) MJIC	2
99	C-4469	Connector - 7/8-14 MJIC	2
	C44003	Plug - 7/8-14 MJIC	2
100	N64050	90 Elbow - 9/16-18 (#06) MJIC x 3/4-16 (#08) MORB	3
	N51990	45 Elbow - 3/4-16 MJIC x 7/8-14 MORB	
101	H18746	Tee - Swivel - (1) - 7/8-14 FJIC x (2) - 7/8-14 MJIC	2
		9800	
102	**S42969**	**Hyd Hose - 3/8 x 36 Lg w/ #6 9/16-18 FJIC**	**1**
103	**N53696**	**Hyd Hose - 3/8 x 66 Lg - #6 9/16-18 FJIC**	**1**
104	**S65380**	**Hyd Hose - 3/8 x 45 Lg - #6 9/16-18 FJIC**	**1**
105	**N53696**	**Hyd Hose - 3/8 x 66 Lg - #6 9/16-18 FJIC**	**1**
		9680	
102	**N53696**	**Hyd Hose - 3/8 x 66 Lg - #6 9/16-18 FJIC**	**1**
104	**N53696**	**Hyd Hose - 3/8 x 66 Lg - #6 9/16-18 FJIC**	**1**
105	**N53696**	**Hyd Hose - 3/8 x 66 Lg - #6 9/16-18 FJIC**	**1**
		9555	
102	**S65380**	**Hyd Hose - 3/8 x 45 Lg - #6 9/16-18 FJIC - VR**	**1**
	S42969	**Hyd Hose - 3/8 x 36 Lg w/ #6 9/16-18 FJIC - ICT**	**1**
105	**N53696**	**Hyd Hose - 3/8 x 66 Lg - #6 9/16-18 FJIC**	**1**
106	**N69202**	**Mount Bracket**	**1**
107			
108	**W-475**	**Hex Bolt - 3/8 x 1**	**2**
109	**N25457**	**U-Bolt - 3/8 x 4 x 8**	**2**
110	**W-523**	**Lock Washer 3/8**	**9**
111	**W-514**	**Hex Nut 3/8**	**6**
	N19023	Decal - Danger “HOT” (Not Shown)	1
	N36263	Decal - Warning “BURN HAZARD” (Not Shown)	1
	N36443	Decal - Auger “LEVER POSITION” (Not Shown)	1
	N19031	Decal - “AUGER / FAN” (Not Shown)	1
	N49783	Decal - “CALIBRAITON / FAN” (Not Shown)	1

- June 2018 to Present -

Dual Flow Hydraulic - Converyor - Option
9800 Tow Between - VR Drive - Dual Fan

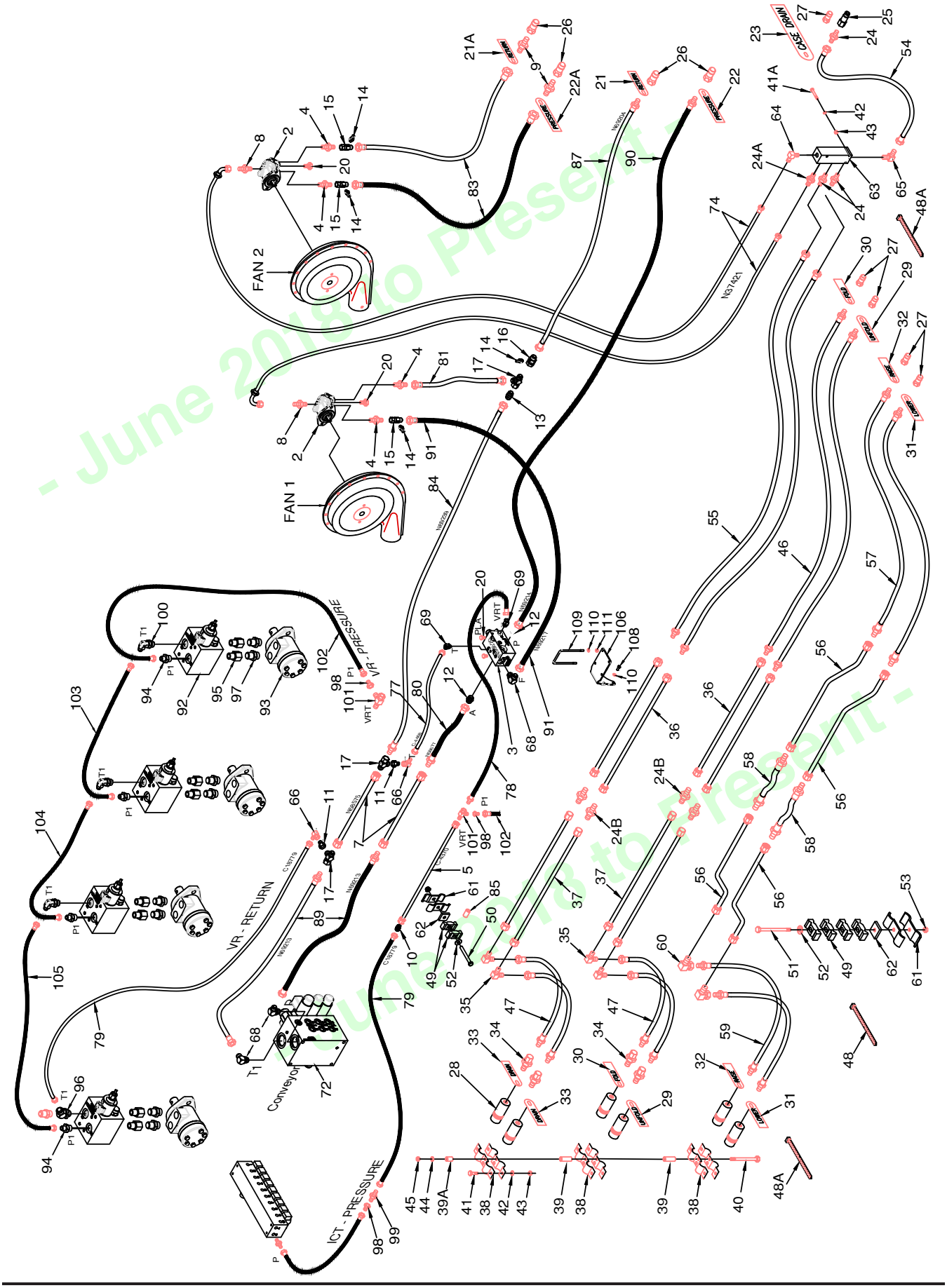

Converyor Dual Flow Hydraulics - 9800 Tow Between - VR Drive - Dual Fans

Item	Part No.	Description	Qty
1	* * * * *	Fan - See Section 11	2
2	N53243	Hydraulic Motor W/ Internal Check Valve - Rexroth - See Section 11	2
3	N58620	Selector Valve - Dual Flow Auger - **VR Drive**	1
4	N34505	Connector - 7/8-14 (#10) MJIC x 7/8-14 (#10) MORB	2
5	C-4370	Oil Line - 5/8 x 128 Lg w/ 7/8-14 FJIC	1
6	* * * * *		
7	N58575	Oil Line - 1 x 96 Lg w/ 1 5/16-12 FJIC	2
8	N29358	Connector - 9/16-18 MJIC x 9/16-18 MORB	2
9	N47903	Connector - 7/8-14 MJIC x 1 1/16-12 MORB	2
10	C-4469	Connector - 7/8-14 MJIC	1
11	N58642	Connector - 7/8-14 MJIC (#10) x 1 5/16-12 MJIC (#16)	2
12	N58621	Connector - 1 5/16-12 MJIC (#16) x 1 5/16-12 MORB (#16)	2
13	N16346	Connector - 1 5/16-12 MJIC	1
14	N64583	Coupler - Test Port - 7/16-20 (#4) MORB	4
15	K62978	Tee - Gauge Port - 7/8-14 (#10) MJIC x 7/8-14 (#10) FJIC x 7/16-20 (#4) FORB	3
16	N64584	Tee - Gauge Port - 1 5/16-12 (#16) MJIC X 1 5/16-12 (#16) FJIC x 7/16-20 (#4) FORB	1
17	N19336	Tee - Swivel - (1) 1 5/16-12 FJIC x (2) 1 5/16-12 MJIC	3
18	* * * * *		
19	* * * * *		
20	**N29365**	Plug - 9/16-18 MORB	2
21	N34577	Tag - Hose ID Tank - Fan/Auger - RETURN	1
21A	N58341	Tag - Hose ID - Air Tank - Fan 2 - RETURN	1
22	N34576	Tag - Hose ID - Tank - Fan/Auger - PRESSURE	1
22A	N58340	Tag - Hose ID - Air Tank - Fan 2 - PRESSURE	1
23	N34578	Tag - Hose ID - Tank - Fan/Auger - CASE DRAIN	1
24	C14840	Connector - 3/4-16 MORB x 7/8-14 MJIC	2
24A	C15330	Connector - 3/4-16 MORB x 3/4-16 MJIC (10178)	1
24B	C-4469	Connector - 7/8-14 (#10) MJIC	4
25	K50834	3/8 Flat Face Tip - 3/4-16 FORB	1
26	N37914	3/4 Male Pioneer Tip - 1 1/16-12 FORB	4
27	N34498	1/2 Male Pioneer Tip - 7/8-14 FORB	7
28	N34488	1/2 Female Pioneer Coupler - 7/8-14 FORB	6
29	S37662	Tag - Hose ID - Wing Lift - UNFOLD	2
30	S37661	Tag - Hose ID - Wing Lift - FOLD	2
31	S37663	Tag - Hose ID - Depth Control - LOWER	2
32	S37664	Tag - Hose ID - Depth Control - RAISE	2
33	S44456	Tag - Hose ID - Case Drain	1
33A	N59870	Tag - Hose ID - Auxiliary Circuit	1
34	N34620	Connector - 7/8-14 FJIC x 7/8-14 MORB	4
35	H24393	90 Elbow - 7/8-14 MJIC	6
36	N37348	Oil Line - 5/8 x 84 Lg w/ 7/8-14 FJIC	4
37	C-4370	Oil Line - 5/8 x 128 Lg w/ 7/8-14 FJIC	4
38	N16608	Coupler Clamp - Female Pioneer	6
39	N19458	Spacer Bushing - 0.364 ID x 0.540 OD x 2	4
39A	N19155	Spacer Bushing - 0.385 ID x 0.625 OD x 1/2	2
40	S13337	Hex Bolt - 5/16 x 6 Lg	2
41	W-469	Hex Bolt - 1/4 x 3/4 Lg	6
41A	C15319	Hex Bolt - 1/4 x 2 1/2 Lg	3
42	W-521	Lockwasher - 1/4	9
43	W-512	Hex Nut - 1/4	9
44	W-522	Lockwasher - 5/16	2
45	W-513	Hex Nut - 5/16	2
46	N37403	Hyd Hose - 1/2 x 192 Lg - 7/8-14 MJIC x 7/8-14 MORB	2
47	C-4387	Hyd Hose - 1/2 x 36 Lg w/7/8-14 MJIC x 7/8-14 FJIC Swivel	4
48	D-4838	Tie Strap - 14 1/2 Lg	15
48A	D-4951	Tie Strap - 7 3/8 Lg	15
48B	S13336	Tie Strap - 24 Lg	3
49	C-4698	Nylon Oil Line Clamp (STD-4) (Tillage-24)	30
50	S-1299	Hex Bolt - 3/8 x 4 1/2 Lg	3
51	C-3664	Hex Bolt - 3/8 x 5 1/2 Lg	4
52	W-538	Flatwasher - 3/8	5
53	M-3388	Locknut - 3/8	7
54	F-4565	Hyd Hose - 1/2 x 60 Lg w/7/8-14 FJIC	1
55	S22403	Hyd Hose - 1/2 x 120 Lg - 7/8-14 FJIC	2
56	N36833	Oil Line - 1 x 94 Lg w/ 1 5/16-12 FJIC (#16)	4
57	N58170	Hyd Hose - 3/4 x 192 Lg - 1 5/16-12 MJIC (#16) x 7/8-14 MORB (#10)	2
58	N58168	Hyd Hose - 3/4 x 36 Lg - 1 5/16-12 MJIC Ends	2
59	N58169	Hyd Hose - 3/4 x 36 Lg - 1 5/16 -12 MJIC (#16) x 7/8 -14 MORB	2
60	N58171	90 Elbow - 1 5/16-12 MJIC x 1 5/16-12 FJIC Swivel	2
61	D-4808	Oil Line Clamp	8
62	S31476	Plate Spacer - 1 1/2 x 1 1/2 x 1/2 thick	4
63	N58670	Case Drain Header	1
64	C15317	90 Elbow - 3/4-16 MJIC x 3/4-16 MORB	1
65	N34646	90 Elbow - 7/8-14 MJIC x 1 1/16-12 MORB	1
66	K-5806	90 Elbow - Swivel - 7/8-14 MJIC x 7/8-14 FJIC	2

- June 2018 to Present -

Converyor Dual Flow Hydraulics - 9800 Tow Between - VR Drive - Dual Fans

Item	Part No.	Description	Qty
67	* * * * *		
68	N58576	90 Elbow - 1 5/16-12 MJIC (#16) x 1 5/16-12 MORB (#16)	3
69	C26333	45 Elbow - 7/8-14 MJIC x 3/4-16 MORB	2
70	N49599	45 Elbow - 7/8-14 MJIC x 7/8-14 MORB	2
71	* * * * *		
72	**N58349**	**Valve - Solenoid - Hydraulic Assist Auger - 45 gpm**	**1**
73	* * * * *		
74	N37421	Hyd Hose - 3/8 x 108 - 3/4-16 FJIC x 9/16-18 FJIC w/90 Bend	2
75	* * * * *		
76	* * * * *		
77	C-4468	Hyd Hose - 1/2 x 24 Lg w/7/8-14 FJIC	1
78	C-4385	Hyd Hose - 1/2 x 24 Lg w/7/8-14 MJIC x 7/8-14 FJIC	1
79	C18779	Hyd Hose - 1/2 x 72 Lg w/7/8-14 FJIC	2
80	N58677	Hyd Hose - 3/4 x 14 Lg - 1 5/16-12 MJIC x 1 5/16-12 FJIC swivel	2
81	N69691	Hyd Hose - 3/4 x 18 Lg - 1 5/16-12 FJIC (#16) x 7/8-14 FJIC (#10)	1
82	* * * * *		
83	**N53484**	Hyd Hose - 3/4 x 150 Lg - 7/8-14 FJIC swivel ends	2
84	**N69239**	**Hyd Hose - 3/4 x 78 Lg - 1 5/16-12 FJIC (#16) x 1 5/16-12 MJIC (#16)**	**1**
85	N16257	Oil Line Spacer - 3/8 ID x 5/8 OD x 5/8 Lg	3
86	* * * * *		
87	N69204	Hyd Hose - 3/4 x 134 Lg - 1 5/16-12 FJIC (#16) x 1 1/16-12 MORB (#12)	1
88	* * * * *		
89	N69213	Hyd Hose - 3/4 x 62 Lg - 1 5/16-12 FJIC (#16) x 1 5/16-12 MJIC (#16)	2
90	N69214	Hyd Hose - 3/4 x 185 Lg - 1 5/16-12 FJIC (#16) x 1 1/16-12 MORB (#12)	1
91	N69217	Hyd Hose - 3/4 x 62 Lg - 1 5/16-12 FJIC (#16) x 7/8-14 FJIC (#10)	1
VR System			
92	N60258	Manifold Assembly (See page 16-24)	1
93	**N72140**	**Hydraulic Motor - Danfoss OMPX-80 - 2021 to present (See Page 16-49)**	1
94	C15348	Connector - 9/16-18 (#06) MJIC x 3/4-16 (#08) MORB	4
	N65810	45 Elbow - 9/16-18 (#06) MJIC x 3/4-16 (#08) MORB	
95	N49460	Connector - Swivel - 7/8-14 (#10) FJIC x 3/4-16 (#08) MORB	8
96	C14840	Connector - 7/8-14 (#10) MJIC x 3/4-16 (#08) MORB	1
	C26333	**45 Elbow - 7/8-14 (#10) MJIC x 3/4-16 (#08) MORB**	
97	N34505	Connector - 7/8-14 (#10) MJIC x 7/8-14 (#10) MORB	8
98	F10384	Connector - 7/8-14 (#10) FJIC x 9/16-18 (#06) MJIC	2
99	C-4469	Connector - 7/8-14 MJIC	2
	C44003	Plug - 7/8-14 MJIC	2
100	N64050	90 Elbow - 9/16-18 (#06) MJIC x 3/4-16 (#08) MORB	3
	N51990	45 Elbow - 3/4-16 MJIC x 7/8-14 MORB	
101	H18746	Tee - Swivel - (1) - 7/8-14 FJIC x (2) - 7/8-14 MJIC	2
		9800	
102	**S42969**	**Hyd Hose - 3/8 x 36 Lg w/ #6 9/16-18 FJIC**	**1**
103	**N53696**	**Hyd Hose - 3/8 x 66 Lg - #6 9/16-18 FJIC**	**1**
104	**S65380**	**Hyd Hose - 3/8 x 45 Lg - #6 9/16-18 FJIC**	**1**
105	**N53696**	**Hyd Hose - 3/8 x 66 Lg - #6 9/16-18 FJIC**	**1**
		9680	
102	**N53696**	**Hyd Hose - 3/8 x 66 Lg - #6 9/16-18 FJIC**	**1**
104	**N53696**	**Hyd Hose - 3/8 x 66 Lg - #6 9/16-18 FJIC**	**1**
105	**N53696**	**Hyd Hose - 3/8 x 66 Lg - #6 9/16-18 FJIC**	**1**
		9555	
102	**S65380**	**Hyd Hose - 3/8 x 45 Lg - #6 9/16-18 FJIC - VR**	**1**
	S42969	**Hyd Hose - 3/8 x 36 Lg w/ #6 9/16-18 FJIC - ICT**	**1**
105	**N53696**	**Hyd Hose - 3/8 x 66 Lg - #6 9/16-18 FJIC**	**1**
106	**N69202**	**Mount Bracket**	**1**
107			
108	**W-475**	**Hex Bolt - 3/8 x 1**	**2**
109	**N25457**	**U-Bolt - 3/8 x 4 x 8**	**2**
110	**W-523**	**Lock Washer 3/8**	**9**
111	**W-514**	**Hex Nut 3/8**	**6**
	N19023	Decal - Danger “HOT” (Not Shown)	1
	N36263	Decal - Warning “BURN HAZARD” (Not Shown)	1
	N36443	Decal - Auger “LEVER POSITION” (Not Shown)	1
	N19031	Decal - “AUGER / FAN” (Not Shown)	1
	N49783	Decal - “CALIBRAITON / FAN” (Not Shown)	1

- June 2018 to Present -

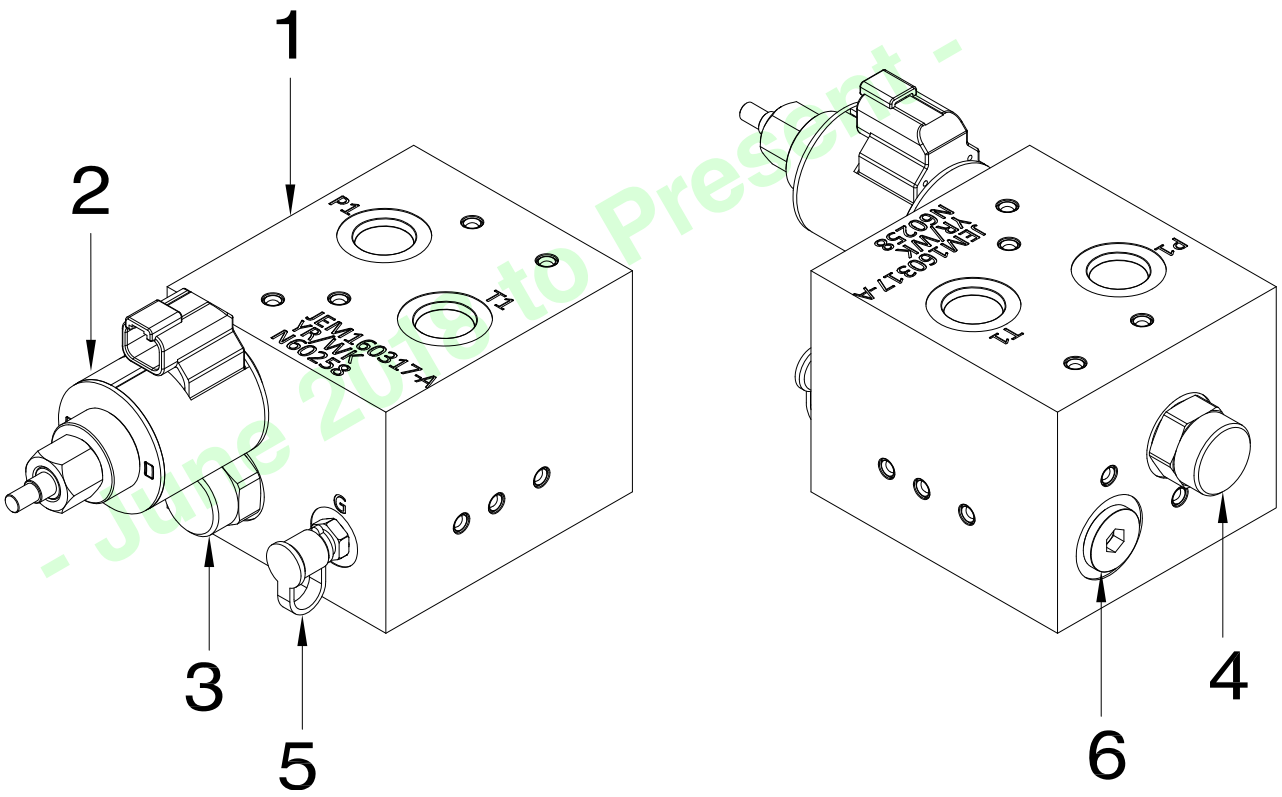

- June 2018 to Present -

Item	Part No.	Description	Qty
1	N65656	Valve Manifold Block	1
2	N65655	Proportional Metering Valve - (Includes Coil N65654) SP10-24P-0-N-00	1
3	N65653	Pressure Compensator Valve EC10-40-0-N-80	1
4	N65652	Flow Regulator FR10-20F-0-N-0.1	1
5	N64583	Coupler - Test Port - 7/16-20 (#4) MORB	1
6	* * * * *	Plug -MORB 515-08	
	N60258	Valve Manifold Assembly (Includes above items)	

- June 2018 to Present -

Transmission Orbit Motor

IMPORTANT: Confirm with customer which series motor they have.

Danfoss has discontinued the DH80 orbit motor. Morris Part number N29319. (Seal Kit N48071)

The replacement motor is **Danfoss OMPX 80.** Morris Part number **N72140. (Seal Kit N72139)**

This is a running change for the 2021 production year starting with the serial numbers listed below:

9365 BD is 9365211872 and newer
9365 BT is 9363211433 and newer
9450 BD is 9450213965 and newer
9450 BT is 9453213433 and newer
9535 BD is 9535216851 and newer
9445 BD is 9445215876 and newer
9445 BT is 9443215395 and newer
9550 BD is 9550214893 and newer
9550 BT is 9553214375 and newer
9650 BD is 9650213012 and newer
9650 BT is 9653212432 and newer
9800 BD is 9800217896 and newer (includes 2 and 3 tank models)
9800 BT is 9803217387 and newer (includes 2 and 3 tank models)
91000 BD IS 91000218871 and newer (includes 2 and 3 tank models)

Note: It is possible to have both series motors on the same Air Cart, so check each motor to determine which seal kits are required.

2022 to present the **Patriot PHDRSY-80** motor has been used to fill any shortages of the Danfoss OMPX 80 motor.

- June 2018 to Present -



Patriot PHDRSY-80.
Morris Part number **N72408.**
Seal Kit N72409



Danfoss OMPX 80
Morris Part number **N72140**
Seal Kit N72139



Danfoss DH 80
Morris Part number **N29319**
Seal Kit N48071

Notes

- June 2018 to Present -

- June 2018 to Present -

Section 17:
Hydraulics - Variable Rate
- March 2014 to May 2018

- Prior to

Section Contents

9365, 9450, 9535 Tow Behind - Fan VRT 17-2
9445, 9550, 9650 Tow Behind - Fan VRT 17-5
9800 and 91000 Tow Behind - Fan VRT 17-8
9365, 9450 Tow Between Hydraulic - Fan VRT 17-11
9445, 9550, 9650 Tow Between Hydraulic - Fan VRT 17-14
9800 Tow Between Hydraulic - Fan VRT 17-17
Dual Fan - Tow Behind 17-20
Dual Fan - Tow Between VRT 17-22
Valve Manifold - 4 Bank 17-24

- Prior to June 2018 -

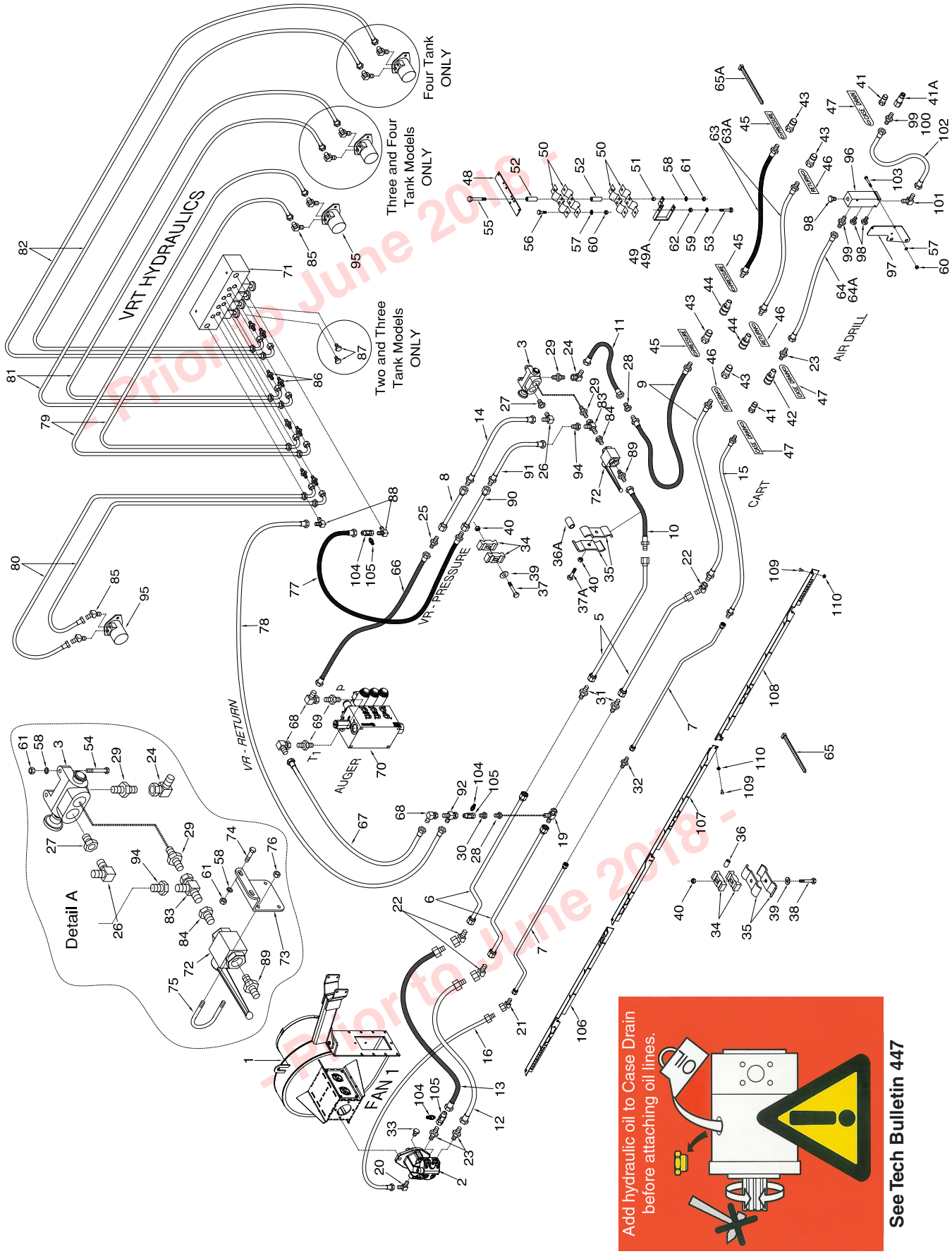
VRT HYDRAULICS
Four Tank ONLY
Three and Four Tank Models ONLY
Two and Three Tank Models ONLY
VR - PRESSURE
VR - RETURN
AUGER
FAN 1
CART
AIR DRILL
Detail A
Add hydraulic oil to Case Drain before attaching oil lines.
See Tech Bulletin 447
- Prior to June 2018 -
- Prior to June 2018 -

Hydraulic - 9365, 9450, 9535 Tow Behind - Fan VRT

Item	Part No.	Description	Qty
Cart System			
1	* * * * *	Fan - See Section 11	1
2	N53243	Hydraulic Motor W/ Internal Check Valve - Rexroth - See Section 11	1
3	N34506	Selector Valve w/1 1/16-12 FORB - (N31603 - Seal Kit) (C26358 - Knob)	1
4	* * * * *		
5	N19335	Oil Line - 1 x 92 Lg w/45 Bend w/1 1/16-12 FJIC	2
6	N36833	Oil Line - 1 x 94 Lg w / 6 Offset Bend x 1 5/16-12 FJIC	2
7	N36444	Oil Line - 1/2 x 94 Lg w / 6 Offset Bend x 3/4-16 FJIC	2
8	C-4368	Oil Line - 5/8 x 88 Lg w/ 7/8-14 FJIC	1
9	N37037	Hyd Hose - 3/4 x 270 Lg w/1 5/16-12 MJIC x 1 1/16-12 MORB	2
10	N50900	Hyd Hose - 3/4 x 52 Lg w/1 5/16-12 MJIC x 1 1/16-12 FJIC	1
11	N15991	Hyd Hose - 3/4 x 12 Lg w/1 1/16-12 FJIC	1
12	N53493	Hyd Hose - 3/4 x 48 Lg w/1 5/16-12 MJIC x 7/8-14 FJIC	1
13	N53495	Hyd Hose - 3/4 x 54 Lg w/1 5/16-12 MJIC x 7/8-14 FJIC	1
14	C-4387	Hyd Hose - 1/2 x 36 Lg w/7/8-14 MJIC x 7/8-14 FJIC	1
15	N37180	Hyd Hose - 3/8 x 270 Lg w/3/4-16 MJIC x 7/8-14 MORB	1
16	N19475	Hyd Hose - 3/8 x 48 Lg w/9/16-18 FJIC x 3/4-16 MJIC	1
19	N19336	Tee - Swivel - (1) 1 5/16-12 FJIC x (2) 1 5/16-12 MJIC	1
20	N16143	90 Elbow - Swivel - 9/16-18 JIC x 9/16-18 ORB	1
21	N36380	45 Elbow - Swivel - 3/4-16 FJIC x 3/4-16 MJIC	1
22	N36382	45 Elbow - Swivel - 1 5/16-12 FJIC x 1 5/16-12 MJIC	3
23	N34505	Connector - 7/8-14 (#10) MJIC x 7/8-14 (#10) MORB	3
24	N21189	90 Elbow - Swivel - 1 1/16-12 FJIC x 1 1/16-12 MJIC	1
25	C-4469	Connector - 7/8-14 MJIC.	1
26	C15318	90 Elbow - 7/8-14 MJIC x 7/8-14 MORB	1
27	N34499	Connector - 1 1/16-12 MORB x 7/8-14 FORB	1
28	N19338	Connector - 1 1/16-12 MJIC x 1 5/16-12 FJIC	1
29	N15990	Connector 1 1/16-12 MJIC x 1 1/16-12 MORB	2
30	N19337	Connector - 7/8-14 MJIC x 1 1/16-12 FJIC	1
31	N16346	Connector - 1 5/16-12 MJIC	2
32	N25754	Connector - 3/4-16 MJIC	1
33	N16621	Plug - 9/16-18 MORB	1
34	C-4698	Nylon Oil Line Clamp	14
35	D-4808	Oil Line Clamp	10
36	N21632	Oil Line Spacer - 3/8 ID x 9/16 OD x 3/4 Lg	4
36A	D-5011	Oil Line Spacer - .625 ID x 1 OD x 1.562 Lg	1
37	W-479	Hex Bolt - 3/8 x 2 1/4 Lg.	3
37A	W-477	Hex Bolt - 3/8 x 1 1/2 Lg.	1
38	D-5249	Hex Bolt - 3/8 x 3 1/4 Lg.	4
39	W-538	Flatwasher - 3/8	7
40	M-3388	Locknut - 3/8	8
41	N34498	1/2 Male Pioneer Tip - 7/8-14 FORB (Cart - 1)	2
41A	K50834	3/8 Flat Face Tip - 3/4-16 FORB	1
42	N34488	1/2 Female Pioneer Coupler - 7/8-14 FORB	1
43	N37914	3/4 Male Pioneer Tip - 1 1/16-12 FORB (Cart - 2)	4
	N69669	Kit-Hydraulic Tip Adapter -1/2 Male Pioneer (See Page 14-63 for details)	
44	N37915	3/4 Female Pioneer Coupler - 1 1/16-12 FORB	2
45	N34576	Tag - Hose ID - Air Tank - Fan/Auger - PRESSURE	3
46	N34577	Tag - Hose ID - Air Tank - Fan/Auger - RETURN	3
47	N34578	Tag - Hose ID - Air Tank - Fan/Auger - CASE DRAIN	3
48	N21690	Mount Bracket	1
49	N21691	Mount Bracket - 4	1
49A	N27589	Mount Bracket - 6	1
50	N16608	Pioneer Coupler Clamp	4
51	N13901	Bushing - 3/8 ID x 5/8 OD x 3/8 Lg	2
52	N19458	Spacer - 3/8 ID x 9/16 OD x 2 Lg	4
53	C-3918	Hex Bolt - 3/8 x 5 Lg.	1
54	S-1303	Hex Bolt - 5/16 x 2 Lg - Cart Selector Valve Mount	2
55	S13337	Hex Bolt - 5/16 x 6 Lg.	2
56	W-469	Hex Bolt - 1/4 x 3/4 Lg.	4
57	W-521	Lockwasher - 1/4	7
58	W-522	Lockwasher - 5/16 (Cart - 2) (VR - 2)	6
59	W-523	Lockwasher - 3/8	1

Prior to June 2018 -

Hydraulic - 9365, 9450, 9535 Tow Behind Hydraulic - Fan VRT

Item	Part No.	Description	Qty
60	W-512	Hex Nut - 1/4	7
61	W-513	Hex Nut - 5/16 (Cart - 2) (VR - 2)	6
62	W-514	Hex Nut - 3/8	1
63	N37036	Hyd Hose - 3/4 x 396 Lg w/1 1/16-12 MORB	2
63A	N37035	Hyd Hose - 3/4 x 348 Lg w/1 1/16-12 MORB	2
63B	N44955	Hyd Hose - 3/4 x 456 Lg w/1 1/16-12 MORB (5-Frame Contour Air Drill)	2
64	N50099	Hyd Hose - 3/8 x 348 Lg w/7/8-14 FJIC x 7/8-14 FJIC Swivel End	1
64A	N55806	Hyd Hose - 3/8 x 300 Lg w/7/8-14 FJIC Ends	1
64B	N50088	Hyd Hose - 3/8 x 396 Lg w/7/8-14 FJIC Ends (5-Frame Contour Air Drill)	1
65	D-4838	Tie Strap - 14 1/2 Lg	16
65A	D-4951	Tie Strap - 7 3/8 Lg	9
Auger System			
66	C-4468	Auger - Hyd Hose - 1/2 x 24 Lg w/7/8-14 FJIC	1
67	C26259	Auger - Hyd Hose - 1/2 x 108 Lg w/7/8-14 FJIC	1
68	K-5806	Auger - 90 Elbow - Swivel - 7/8-14 MJIC x 7/8-14 FJIC	3
69	N47903	Auger - Connector - 7/8-14 MJIC x 1 1/16-12 MORB	2
70	N58555	Auger - Valve Block	1
VR System			
71	N45195	Manifold Assembly - 4 Bank (See page 17-24)	1
72	N37845	Ball Valve (Handle - N66053)	1
73	N37847	Plate	1
74	W-471	Hex Bolt - 5/16 x 1 Lg	2
75	N37846	U-Bolt - 1/4 x 2 x 3	2
76	D-5277	Serrrated Locknut - 1/4	4
77	C-4387	Hyd Hose - 1/2 x 36 Lg w/7/8-14 MJIC x 7/8-14 FJIC	1
78	K-5685	Hyd Hose - 1/2 x 48 Lg w/7/8-14 FJIC	1
79	N29363	9365 - Hyd Hose - 3/8 x 60 Lg w/3/4-16 FJIC x 9/16-18FJIC w/90 Bend	2
	N29362	9450 & 9535 - Hyd Hose - 3/8 x 48 Lg w/3/4-16 FJIC x 9/16-18FJIC w/90 Bend	2
80	N29364	ALL - Hyd Hose - 3/8 x 72 Lg w/3/4-16 FJIC x 9/16-18 FJIC w/90 Bend	2
81	N37421	9450 & 9535 Hyd Hose - 3/8 x 108 Lg w/3/4-16 FJIC x 9/16-18 FJIC w/90 Bend	2
82	N45192	9535 Hyd Hose - 3/8 x 120 Lg w/3/4-16 FJIC x 9/16-18 FJIC w/90 Bend	2
83	N29356	Tee - Swivel - (1) - 1 1/16 FJIC x (2) - 1 1/16 MJIC	1
84	N37849	Connector - 1 1/16 FJIC x 1 1/16-12 MORB	1
85	N51990	45 Elbow - 3/4-16 MJIC x 7/8-14 MORB	8
86	N29358	Connector - 9/16-18 MJIC x 9/16-18 MORB	8
87	N29365	Plug - 9/16-18 MORB	2
88	C15318	90 Elbow - 7/8-14 MJIC x 7/8-14 MORB	2
89	N15990	Connector - 1 1/16-12 MJIC x 1 1/16-12 MORB	1
90	C-4368	Oil Line - 5/8 x 88 Lg w/ 7/8-14 FJIC	1
91	C-4385	Hyd Hose - 1/2 x 24 Lg w/7/8-14 MJIC x 7/8-14 FJIC	1
92	H18746	Tee - Swivel - (1) - 7/8-14 FJIC x (2) - 7/8-14 MJIC	1
93	C-4469	Connector - 7/8-14 MJIC	1
94	N19337	Connector - 7/8-14 MJIC x 1 1/16-12 FJIC	1
95	N29319	Hydraulic Motor - DANFOSS	1
	N48071	Seal Kit for DANFOSS DH80 series 1 motor	
	N42365	Seal Kit for WHITE RS series motor	
96	N58670	Case Drain Header	1
97	N58671	Plate - Case Drain Header Mount	1
98	C28505	Plug - 3/4-16 MORB	3
99	C14840	Connector - 3/4-16 MORB x 7/8-14 MJIC	2
100	N34505	Connector - Swivel - 7/8-14 MORB x 7/8-14 MJIC	1
101	N34646	90 Elbow - 7/8-14 MJIC x 1 1/16-12 MORB	1
102	F-4565	Hyd Hose - 1/2 x 60 Lg w/7/8-14 FJIC	1
103	C15319	Hex Bolt - 1/4 x 2 1/2 Lg	3
104	N64583	Coupler - Test Port - 7/16-20 (#4) MORB	3
105	K62978	Tee - Gauge Port - 7/8-14 (#10) MJIC x 7/8-14 (#10) FJIC x 7/16-20 (#4) FORB	3
106	N59002	Apollo - Rear Template - mount on top of oil lines	1
107	N59003	Apollo - Middle Template - mount on top of oil lines	1
108	N59004	Apollo - Front Template - mount on top of oil lines	1
109	D-5259	Carriage Bolt - 5/16 x 3/4 Lg	5
110	D-5278	Locknut - 5/16 Serrrated Flange	5
	N19023	Decal - Danger “HOT” (Not Shown)	1
	N36263	Decal - Warning “BURN HAZARD” (Not Shown)	1
	N36443	Decal - Auger “LEVER POSITION” (Not Shown)	1
	N36453	Decal - “AUGER / FAN” (Not Shown)	1
	N49783	Decal - “FAN / CALIBRATION”	1

Prior to June 2018
Prior to June 2018 -

Hydraulic
9445, 9550, 9650 Tow Behind - Fan VRT

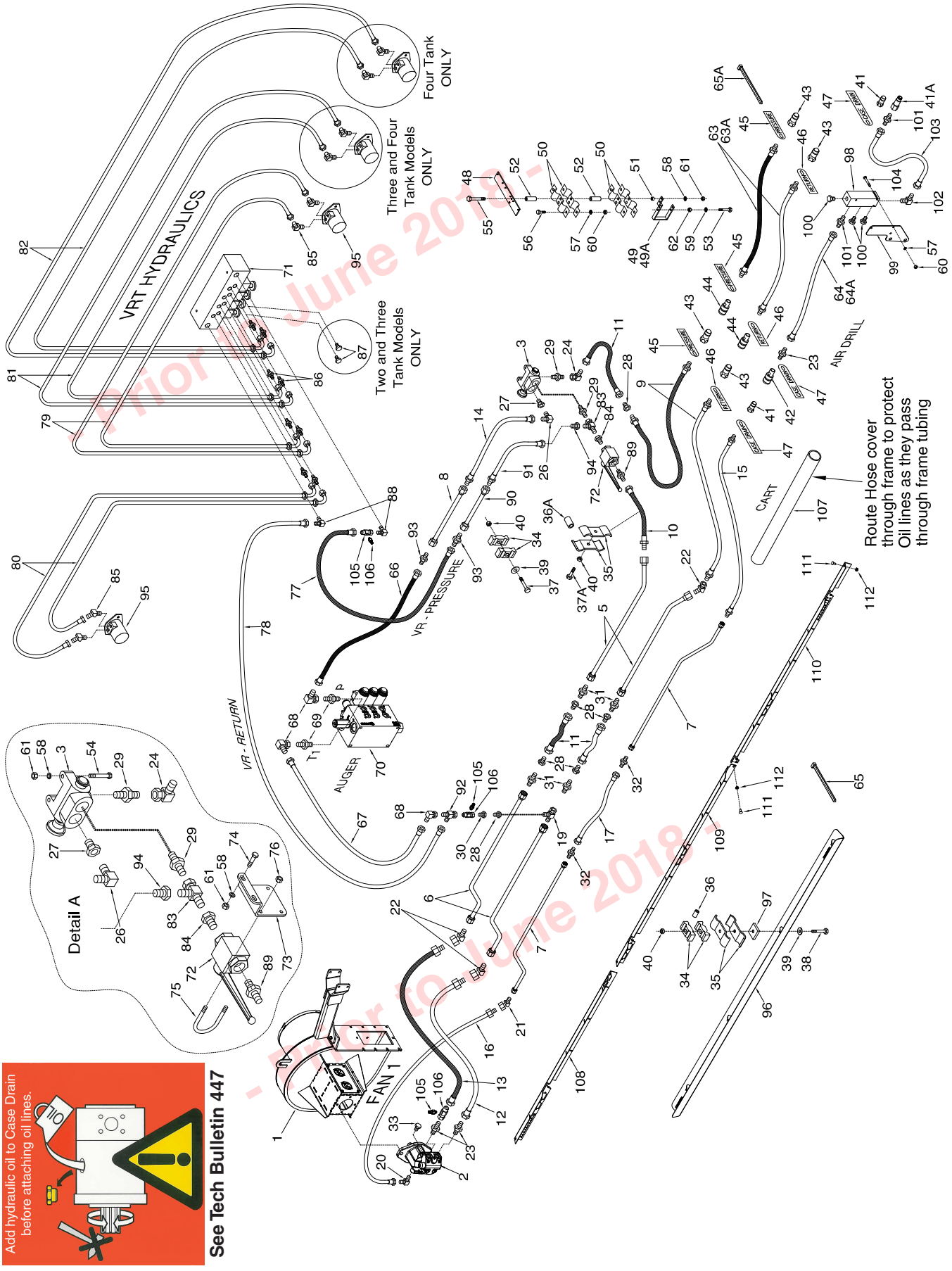

Hydraulic - 9445, 9550, 9650 Tow Behind - Fan VRT

Item	Part No.	Description	Qty
Cart System			
1	* * * * *	Fan - See Section 11	1
2	N53243	Hydraulic Motor W/ Internal Check Valve - Rexroth - See Section 11	1
3	N34506	Selector Valve w/1 1/16-12 FORB - (N31603 - Seal Kit) (C26358 - Knob)	1
4	* * * * *		
5	N27601	Oil Line - 1 x 108 Lg w/45 Bend w/1 1/16-12 FJIC	2
6	N36833	Oil Line - 1 x 94 Lg w / 6 Offset Bend x 1 5/16-12 FJIC	2
7	N36444	Oil Line - 1/2 x 94 Lg w / 6 Offset Bend x 3/4-16 FJIC	2
8	C-4370	Oil Line - 5/8 x 128 Lg w/ 7/8-14 FJIC	1
9	N56061	Hyd Hose - 3/4 x 330 Lg w/1 5/16-12 MJIC x 1 1/16-12 MORB	2
10	N55197	Hyd Hose - 3/4 x 57 Lg w/1 5/16-12 MJIC x 1 1/16-12 FJIC	1
11	N15991	Hyd Hose - 3/4 x 12 Lg w/1 1/16-12 FJIC	3
12	N53493	Hyd Hose - 3/4 x 48 Lg w/1 5/16-12 MJIC x 7/8-14 FJIC	1
13	N53495	Hyd Hose - 3/4 x 54 Lg w/1 5/16-12 MJIC x 7/8-14 FJIC	1
14	C-4385	Hyd Hose - 1/2 x 24 Lg w/7/8-14 MJIC x 7/8-14 FJIC	1
15	N56063	Hyd Hose - 3/8 x 330 Lg w/3/4-16 MJIC x 7/8-14 MORB	1
16	N19475	Hyd Hose - 3/8 x 48 Lg w/9/16-18 FJIC x 3/4-16 MJIC	1
17	D10821	Hyd Hose - 3/8 x 38 Lg w/3/4-16 FJIC	1
19	N19336	Tee - Swivel - (1) 1 5/16-12 FJIC x (2) 1 5/16-12 MJIC	1
20	N16143	90 Elbow - Swivel - 9/16-18 JIC x 9/16-18 ORB	1
21	N36380	45 Elbow - Swivel - 3/4-16 FJIC x 3/4-16 MJIC	1
22	N36382	45 Elbow - Swivel - 1 5/16-12 FJIC x 1 5/16-12 MJIC	3
23	N34505	Connector - 7/8-14 (#10) MJIC x 7/8-14 (#10) MORB	3
24	N21189	90 Elbow - Swivel - 1 1/16-12 FJIC x 1 1/16-12 MJIC	1
26	C15318	90 Elbow - 7/8-14 MJIC x 7/8-14 MORB	1
27	N34499	Connector - 1 1/16-12 MORB x 7/8-14 FORB	1
28	N19338	Connector - 1 1/16-12 MJIC x 1 5/16-12 FJIC	5
29	N15990	Connector 1 1/16-12 MJIC x 1 1/16-12 MORB	2
30	N19337	Connector - 7/8-14 MJIC x 1 1/16-12 FJIC	1
31	N16346	Connector - 1 5/16-12 MJIC	4
32	N25754	Connector - 3/4-16 MJIC	2
33	N16621	Plug - 9/16-18 MORB	1
34	C-4698	Nylon Oil Line Clamp	14
35	D-4808	Oil Line Clamp	10
36	N21632	Oil Line Spacer - 3/8 ID x 9/16 OD x 3/4 Lg	4
36A	D-5011	Oil Line Spacer - .625 ID x 1 OD x 1.562 Lg	1
37	W-479	Hex Bolt - 3/8 x 2 1/4 Lg	3
37A	W-477	Hex Bolt - 3/8 x 1 1/2 Lg	1
38	C-1550	Hex Bolt - 3/8 x 4 Lg	4
39	W-538	Flatwasher - 3/8	7
40	M-3388	Locknut - 3/8	8
41	N34498	1/2 Male Pioneer Tip - 7/8-14 FORB (Cart - 1)	2
41A	K50834	3/8 Flat Face Tip - 3/4-16 FORB	1
42	N34488	1/2 Female Pioneer Coupler - 7/8-14 FORB	1
43	N37914	3/4 Male Pioneer Tip - 1 1/16-12 FORB (Cart - 2)	4
	N69669	Kit-Hydraulic Tip Adapter -1/2 Male Pioneer (See Page 14-63 for details)	
44	N37915	3/4 Female Pioneer Coupler - 1 1/16-12 FORB	2
45	N34576	Tag - Hose ID - Air Tank - Fan/Auger - PRESSURE	3
46	N34577	Tag - Hose ID - Air Tank - Fan/Auger - RETURN	3
47	N34578	Tag - Hose ID - Air Tank - Fan/Auger - CASE DRAIN	3
48	N21690	Mount Bracket	1
49	N21691	Mount Bracket - 4	1
49A	N27589	Mount Bracket - 6	1
50	N16608	Pioneer Coupler Clamp	4
51	N13901	Bushing - 3/8 ID x 5/8 OD x 3/8 Lg	2
52	N19458	Spacer - 3/8 ID x 9/16 OD x 2 Lg	4
53	C-3918	Hex Bolt - 3/8 x 5 Lg	1
54	S-1303	Hex Bolt - 5/16 x 2 Lg - Cart Selector Valve Mount	2
55	S13337	Hex Bolt - 5/16 x 6 Lg	2
56	W-469	Hex Bolt - 1/4 x 3/4 Lg	4
57	W-521	Lockwasher - 1/4	4
58	W-522	Lockwasher - 5/16 (Cart - 2) (VR - 2)	6
59	W-523	Lockwasher - 3/8	1
60	W-512	Hex Nut - 1/4	4
61	W-513	Hex Nut - 5/16 (Cart - 2) (VR - 2)	6
62	W-514	Hex Nut - 3/8	1

Prior to June 2018

Hydraulic - 9445, 9550, 9650 Tow Behind Hydraulic - Fan VRT

Item	Part No.	Description	Qty
63	N37036	Hyd Hose - 3/4 x 396 Lg w/1 1/16-12 MORB	2
63A	N37035	Hyd Hose - 3/4 x 348 Lg w/1 1/16-12 MORB	2
63B	N44955	Hyd Hose - 3/4 x 456 Lg w/1 1/16-12 MORB (5-Frame Contour Air Drill)	2
64	N50099	Hyd Hose - 3/8 x 348 Lg w/7/8-14 FJIC x 7/8-14 FJIC Swivel End	1
64A	N55806	Hyd Hose - 3/8 x 300 Lg w/7/8-14 FJIC Ends	1
64B	N50088	Hyd Hose - 3/8 x 396 Lg w/7/8-14 FJIC Ends (5-Frame Contour Air Drill)	1
65	D-4838	Tie Strap - 14 1/2 Lg	16
65A	D-4951	Tie Strap - 7 3/8 Lg	9
Auger System			
66	C-4387	Auger - Hyd Hose - 1/2 x 36 Lg w/ 7/8-14 MJIC x 7/8-14 FJIC Swivel (Prior to 2017)	1
	C26344	Auger - Hyd Hose - 1/2 x 42 Lg w/7/8-14 FJIC	1
67	C26259	Auger - Hyd Hose - 1/2 x 108 Lg w/7/8-14 FJIC	1
68	K-5806	Auger - 90 Elbow - Swivel - 7/8-14 MJIC x 7/8-14 FJIC	3
69	N47903	Auger - Connector - 7/8-14 MJIC x 1 1/16-12 MORB	2
70	N58555	Auger - Valve Block	1
VR System			
71	N45195	Manifold Assembly - 4 Bank (See page 17-24)	1
72	N37845	Ball Valve (Handle - N66053)	1
73	N37847	Plate	1
74	W-471	Hex Bolt - 5/16 x 1 Lg	2
75	N37846	U-Bolt - 1/4 x 2 x 3	2
76	D-5277	Locknut - 1/4 Serrrated	4
77	C26344	Hyd Hose - 1/2 x 42 Lg w/7/8-14 FJIC	1
78	K-5685	Hyd Hose - 1/2 x 48 Lg w/7/8-14 FJIC	1
79	N29364	9445 - Hyd Hose - 3/8 x 72 Lg w/3/4-16 FJIC x 9/16-18 FJIC w/90 Bend	2
	N29363	9550 & 9650 - Hyd Hose - 3/8 x 60 Lg w/3/4-16 FJIC x 9/16-18FJIC w/90 Bend	2
80	N29364	ALL - Hyd Hose - 3/8 x 72 Lg w/3/4-16 FJIC x 9/16-18 FJIC w/90 Bend	2
81	N51952	9550 & 9650 - Hyd Hose - 3/8 x 96 Lg w/3/4-16 FJIC x 9/16-18 FJIC w/90 Bend	2
82	N51951	9650 - Hyd Hose - 3/8 x 144 Lg w/3/4-16 FJIC x 9/16-18 FJIC w/90 Bend	2
83	N29356	Tee - Swivel - (1) - 1 1/16 FJIC x (2) - 1 1/16 MJIC	1
84	N37849	Connector - 1 1/16 FJIC x 1 1/16-12 MORB	1
85	N51990	45 Elbow - 3/4-16 MJIC x 7/8-14 MORB	8
86	N29358	Connector - 9/16-18 MJIC x 9/16-18 MORB	8
87	N29365	Plug - 9/16-18 MORB	2
88	C15318	90 Elbow - 7/8-14 MJIC x 7/8-14 MORB	2
89	N15990	Connector - 1 1/16-12 MJIC x 1 1/16-12 MORB	1
90	C-4370	Oil Line - 5/8 x 128 Lg w/ 7/8-14 FJIC	1
91	C-4385	Hyd Hose - 1/2 x 24 Lg w/7/8-14 MJIC x 7/8-14 FJIC	1
92	H18746	Tee - Swivel - (1) - 7/8-14 FJIC x (2) - 7/8-14 MJIC	1
93	C-4469	Connector - 7/8-14 MJIC	2
94	N19337	Connector - 7/8-14 MJIC x 1 1/16-12 FJIC	1
95	N29319	Hydraulic Motor - DANFOSS	4
	N48071	Seal Kit for DANFOSS DH80 series 1 motor	
	N42365	Seal Kit for WHITE RS series motor	
96	N53086	Panel - Oil Line Cover - 2 1/4 tall - Single Fan	2
	N53009	Panel - Oil Line Cover - 3 3/4 tall - Dual Fan	2
97	S31476	Plate Spacer - 1/2	4
98	N58670	Case Drain Header	1
99	N58671	Plate - Case Drain Header Mount	1
100	C28505	Plug - 3/4-16 MORB	3
101	C14840	Connector - 3/4-16 MORB x 7/8-14 MJIC	2
102	N34646	90 Elbow - 7/8-14 MJIC x 1 1/16-12 MORB	1
103	F-4565	Hyd Hose - 1/2 x 60 Lg w/7/8-14 FJIC	1
104	C15319	Hex Bolt - 1/4 x 2 1/2 Lg	3
105	N64583	Coupler - Test Port - 7/16-20 (#4) MORB	3
106	K62978	Tee - Gauge Port - 7/8-14 (#10) MJIC x 7/8-14 (#10) FJIC x 7/16-20 (#4) FORB	3
107	N62246	Hydraulic Hose Sleeve - 3” Dia x 36” Lg	1
108	N58940	Apollo - Rear Template	1
109	N58941	Apollo - Middle Template	1
110	N58942	Apollo - Front Template	1
111	D-5259	Carriage Bolt - 5/16 x 3/4 Lg	5
112	D-5278	Locknut - 5/16 Serrrated Flange	5
	N19023	Decal - Danger “HOT” (Not Shown)	1
	N36263	Decal - Warning “BURN HAZARD” (Not Shown)	1
	N36443	Decal - Auger “LEVER POSITION” (Not Shown)	1
	N36453	Decal - “AUGER / FAN” (Not Shown)	1
	N49783	Decal - “FAN / CALIBRATION”	1

Prior to June 2018 - Post June 2018 -

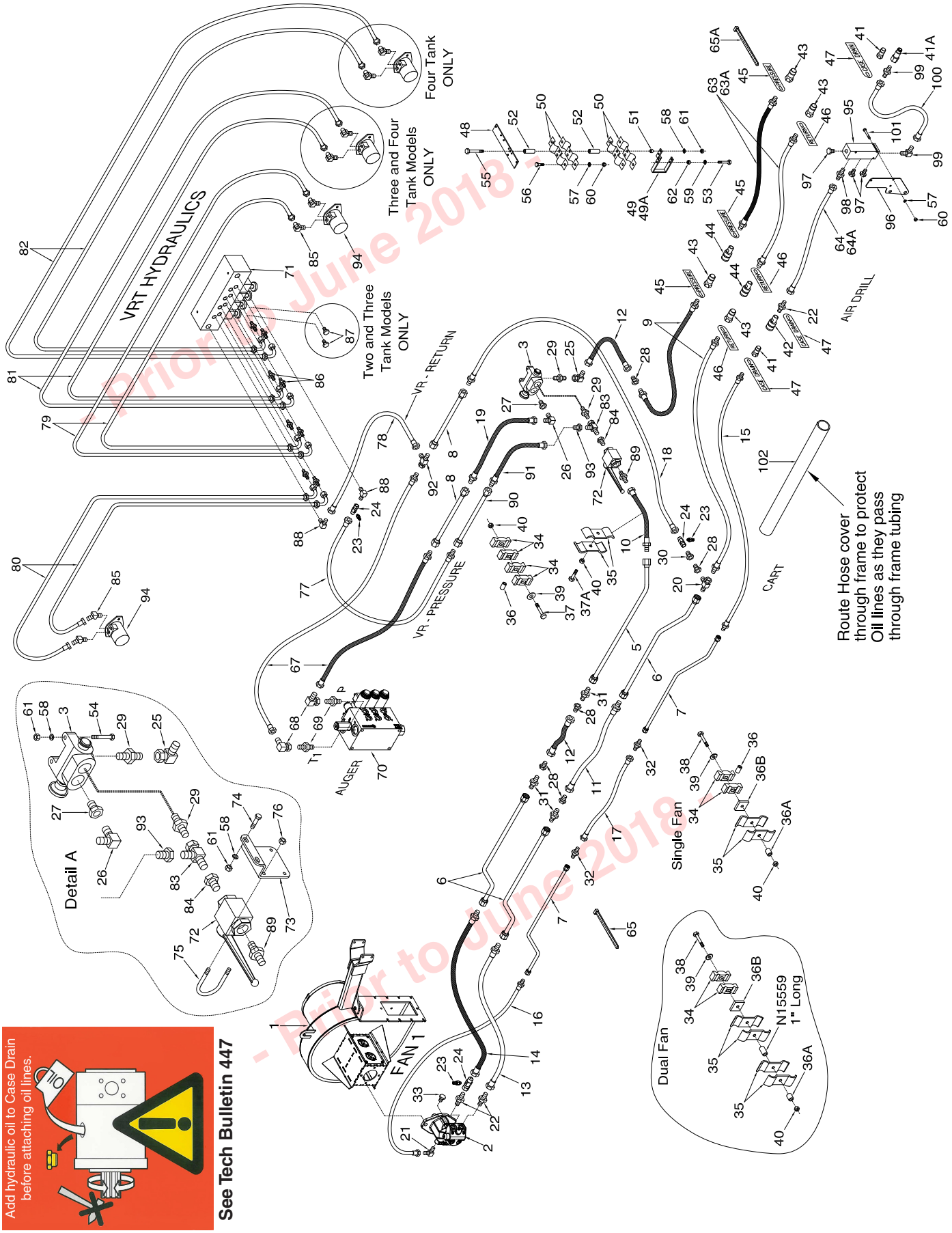
VRT HYDRAULICS
Four Tank ONLY
Three and Four Tank Models ONLY
Two and Three Tank Models ONLY
VR - RETURN
VR - PRESSURE
AUGER
FAN 1
AIR DRILL
CART
Route Hose cover through frame to protect Oil lines as they pass through frame tubing
Detail A
Single Fan
Dual Fan
N15559 1" Long
Add hydraulic oil to Case Drain before attaching oil lines.
See Tech Bulletin 447
- Prior to June 2018 -

Hydraulic - 9800 and 91000 Tow Behind - Fan VRT

Item	Part No.	Description	Qty
Cart System			
1	* * * * *	Fan - See Section 11	1
2	N53243	Hydraulic Motor W/ Internal Check Valve - Rexroth - See Section 11	1
3	N34506	Selector Valve w/1 1/16-12 FORB - (N31603 - Seal Kit) (C26358 - Knob)	1
4	* * * * *		
5	N27601	Oil Line - 1 x 108 Lg w/45 Bend w/1 1/16-12 FJIC	2
6	N36833	Oil Line - 1 x 94 Lg w / 6 Offset Bend x 1 5/16-12 FJIC	2
7	N36444	Oil Line - 1/2 x 94 Lg w / 6 Offset Bend x 3/4-16 FJIC	2
8	C-4370	Oil Line - 5/8 x 128 Lg w/ 7/8-14 FJIC	2
9	N56061	Hyd Hose - 3/4 x 330 Lg w/1 5/16-12 MJIC x 1 1/16-12 MORB	2
10	N55197	Hyd Hose - 3/4 x 57 Lg w/1 5/16-12 MJIC x 1 1/16-12 FJIC	1
11	N19434	Hyd Hose - 3/4 x 35 Lg w/1 5/16-12 MJIC x 1 1/16-12 FJIC	1
12	N15991	Hyd Hose - 3/4 x 12 Lg w/1 1/16-12 FJIC	2
13	N53493	Hyd Hose - 3/4 x 48 Lg w/1 5/16-12 MJIC x 7/8-14 FJIC	1
14	N53495	Hyd Hose - 3/4 x 54 Lg w/1 5/16-12 MJIC x 7/8-14 FJIC	1
15	N56063	Hyd Hose - 3/8 x 330 Lg w/3/4-16 MJIC x 7/8-14 MORB	1
16	N19475	Hyd Hose - 3/8 x 48 Lg w/9/16-18 FJIC x 3/4-16 MJIC	1
17	D10821	Hyd Hose - 3/8 x 38 Lg w/3/4-16 FJIC	1
18	C15310	Hyd Hose - 1/2 x 72 Lg w/7/8-14 MJIC x 7/8-14 FJIC	1
19	C-4385	Hyd Hose - 1/2 x 24 Lg w/7/8-14 MJIC x 7/8-14 FJIC	1
20	N19336	Tee - Swivel - (1) 1 5/16-12 FJIC x (2) 1 5/16-12 MJIC	1
21	N16143	90 Elbow - Swivel - 9/16-18 JIC x 9/16-18 ORB	1
22	N34505	Connector - 7/8-14 (#10) MJIC x 7/8-14 (#10) MORB	3
23	N64583	Coupler - Test Port - 7/16-20 (#4) MORB	3
24	K62978	Tee - Gauge Port - 7/8-14 (#10) MJIC x 7/8-14 (#10) FJIC x 7/16-20 (#4) FORB	3
25	N21189	90 Elbow - Swivel - 1 1/16-12 FJIC x 1 1/16-12 MJIC	1
26	C15318	90 Elbow - 7/8-14 MJIC x 7/8-14 MORB	1
27	N34499	Connector - 1 1/16-12 MORB x 7/8-14 FORB	1
28	N19338	Connector - 1 1/16-12 MJIC x 1 5/16-12 FJIC	5
29	N15990	Connector 1 1/16-12 MJIC x 1 1/16-12 MORB	2
30	N19337	Connector - 7/8-14 MJIC x 1 1/16-12 FJIC	1
31	N16346	Connector - 1 5/16-12 MJIC	4
32	N25754	Connector - 3/4-16 MJIC	2
33	N16621	Plug - 9/16-18 MORB	1
34	C-4698	Nylon Oil Line Clamp	14
35	D-4808	Oil Line Clamp	10
36	N21632	Oil Line Spacer - 3/8 ID x 9/16 OD x 3/4 Lg	4
36A	N16257	Oil Line Spacer - 3/8 ID x 5/8 OD x 5/8 Lg	4
36B	S31476	Plate Spacer - 1/2	4
37	C-1550	Hex Bolt - 3/8 x 4 Lg	3
37A	W-477	Hex Bolt - 3/8 x 1 1/2 Lg	1
38	C-1550	Hex Bolt - 3/8 x 4 Lg	4
39	W-538	Flatwasher - 3/8	7
40	M-3388	Locknut - 3/8	8
41	N34498	1/2 Male Pioneer Tip - 7/8-14 FORB (Cart - 1)	2
41A	K50834	3/8 Flat Face Tip - 3/4-16 FORB	1
42	N34488	1/2 Female Pioneer Coupler - 7/8-14 FORB	1
43	N37914	3/4 Male Pioneer Tip - 1 1/16-12 FORB (Cart - 2)	4
	N69669	Kit-Hydraulic Tip Adapter -1/2 Male Pioneer (See Page 14-63 for details)	
44	N37915	3/4 Female Pioneer Coupler - 1 1/16-12 FORB	2
45	N34576	Tag - Hose ID - Air Tank - Fan/Auger - PRESSURE	3
46	N34577	Tag - Hose ID - Air Tank - Fan/Auger - RETURN	3
47	N34578	Tag - Hose ID - Air Tank - Fan/Auger - CASE DRAIN	3
48	N21690	Mount Bracket	1
49	N21691	Mount Bracket - 4	1
49A	N27589	Mount Bracket - 6	1
50	N16608	Pioneer Coupler Clamp	4
51	N13901	Bushing - 3/8 ID x 5/8 OD x 3/8 Lg	2
52	N19458	Spacer - 3/8 ID x 9/16 OD x 2 Lg	4
53	C-3918	Hex Bolt - 3/8 x 5 Lg	1
54	S-1303	Hex Bolt - 5/16 x 2 Lg - Cart Selector Valve Mount	2
55	S13337	Hex Bolt - 5/16 x 6 Lg	2
56	W-469	Hex Bolt - 1/4 x 3/4 Lg	4

Prior to June 2018 -

Hydraulic - 9800 and 91000 Tow Behind Hydraulic - Fan VRT

Item	Part No.	Description	Qty
57	W-521	Lockwasher - 1/4	7
58	W-522	Lockwasher - 5/16 (Cart - 2) (VR - 2)	6
59	W-523	Lockwasher - 3/8	1
60	W-512	Hex Nut - 1/4	7
61	W-513	Hex Nut - 5/16 (Cart - 2) (VR - 2)	6
62	W-514	Hex Nut - 3/8	1
63	N37036	Hyd Hose - 3/4 x 396 Lg w/1 1/16-12 MORB	2
63A	N37035	Hyd Hose - 3/4 x 348 Lg w/1 1/16-12 MORB	2
63B	N44955	Hyd Hose - 3/4 x 456 Lg w/1 1/16-12 MORB (5-Frame Contour Air Drill)	2
64	N50099	Hyd Hose - 3/8 x 348 Lg w/7/8-14 FJIC x 7/8-14 FJIC Swivel End	1
64A	N55806	Hyd Hose - 3/8 x 300 Lg w/7/8-14 FJIC Ends	1
64B	N50088	Hyd Hose - 3/8 x 396 Lg w/7/8-14 FJIC Ends (5-Frame Contour Air Drill)	1
65	D-4838	Tie Strap - 14 1/2 Lg	16
65A	D-4951	Tie Strap - 7 3/8 Lg	9
Auger System			
67	C-4387	Auger - Hyd Hose - 1/2 x 36 Lg w/7/8-14 MJIC x 7/8-14 FJIC	2
68	K-5806	Auger - 90 Elbow - Swivel - 7/8-14 MJIC x 7/8-14 FJIC	3
69	N47903	Auger - Connector - 7/8-14 MJIC x 1 1/16-12 MORB	2
70	N58555	Auger - Valve Block	1
VR System			
71	N45195	Manifold Assembly - 4 Bank (See page 17-24)	1
72	N37845	Ball Valve (Handle - N66053)	1
73	N37847	Plate	1
74	W-471	Hex Bolt - 5/16 x 1 Lg	2
75	N37846	U-Bolt - 1/4 x 2 x 3	2
76	D-5277	Serrrated Locknut - 1/4	4
77	C-4387	Hyd Hose - 1/2 x 36 Lg w/7/8-14 MJIC x 7/8-14 FJIC	1
78	K-5685	Hyd Hose - 1/2 x 48 Lg w/7/8-14 FJIC	1
79	N29364	Hyd Hose - 3/8 x 72 Lg w/3/4-16 FJIC x 9/16-18 FJIC w/90 Bend	2
80	N50079	Hyd Hose - 3/8 x 84 Lg w/3/4-16 FJIC x 9/16-18 FJIC w/90 Bend	2
81	N45192	Hyd Hose - 3/8 x 120 Lg w/3/4-16 FJIC x 9/16-18 FJIC w/90 Bend	2
82	N53344	Hyd Hose - 3/8 x 168 Lg w/3/4-16 FJIC x 9/16-18 FJIC w/90 Bend	2
83	N29356	Tee - Swivel - (1) - 1 1/16 FJIC x (2) - 1 1/16 MJIC	1
84	N37849	Connector - 1 1/16 FJIC x 1 1/16-12 MORB	1
85	N51990	45 Elbow - 3/4-16 MJIC x 7/8-14 MORB	8
86	N29358	Connector - 9/16-18 MJIC x 9/16-18 MORB	8
87	N29365	Plug - 9/16-18 MORB	2
88	C15318	90 Elbow - 7/8-14 MJIC x 7/8-14 MORB	2
89	N15990	Connector - 1 1/16-12 MJIC x 1 1/16-12 MORB	1
90	C-4370	Oil Line - 5/8 x 128 Lg w/ 7/8-14 FJIC	1
91	C-4385	Hyd Hose - 1/2 x 24 Lg w/7/8-14 MJIC x 7/8-14 FJIC	1
92	H18746	Tee - Swivel - (1) - 7/8-14 FJIC x (2) - 7/8-14 MJIC	1
93	N19337	Connector - 7/8-14 MJIC x 1 1/16-12 FJIC	1
94	N29319	Hydraulic Motor - DANFOSS	4
	N48071	Seal Kit for DANFOSS DH80 series 1 motor	
	N42365	Seal Kit for WHITE RS series motor	
	N19023	Decal - Danger “HOT” (Not Shown)	1
	N36263	Decal - Warning “BURN HAZARD” (Not Shown)	1
	N36443	Decal - Auger “LEVER POSITION” (Not Shown)	1
	N36453	Decal - “AUGER / FAN” (Not Shown)	1
	N49783	Decal - “FAN / CALIBRATION”	1
95	N58670	Case Drain Header	1
96	N58671	Plate - Case Drain Header Mount	1
97	C28505	Plug - 3/4-16 MORB	3
98	C14840	Connector - 3/4-16 MORB x 7/8-14 MJIC	2
99	N34646	90 Elbow - 7/8-14 MJIC x 1 1/16-12 MORB	1
100	F-4565	Hyd Hose - 1/2 x 60 Lg w/7/8-14 FJIC	1
101	C15319	Hex Bolt - 1/4 x 2 1/2 Lg	3
102	N62246	Hydraulic Hose Sleeve - 3” Dia x 36” Lg	1

Prior to June 2018 - See Prior to June 2018 -

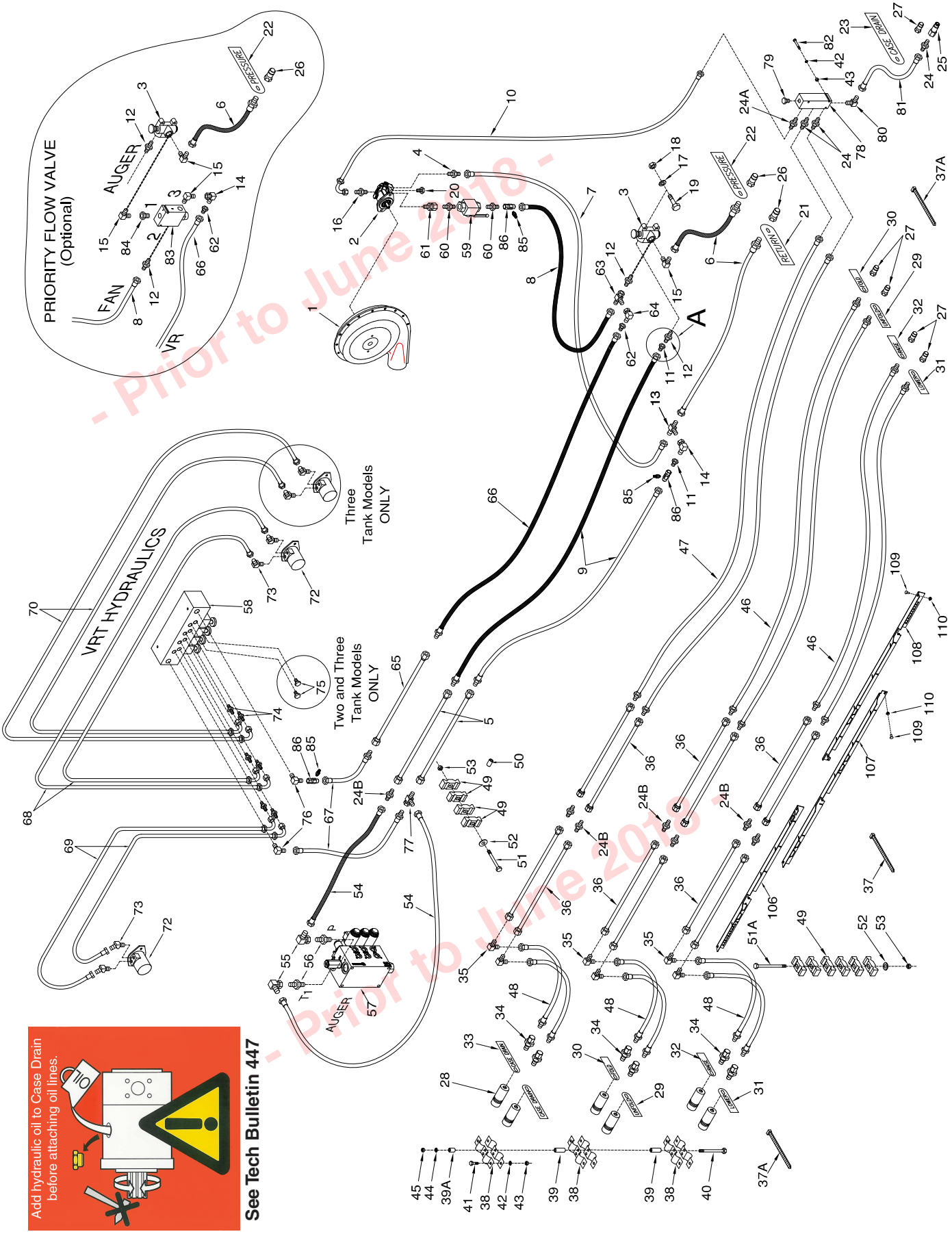

See Tech Bulletin 447

9365, 9450 Tow Between Hydraulic Drive - Fan VRT

Item	Part No.	Description	Qty
1	* * * * *	Fan - See Section 11	1
2	N53243	Hydraulic Motor W/ Internal Check Valve - Rexroth - See Section 11	2
3	N37514	Selector Valve (Seal Kit # N31603) (Knob # C26358)	1
4	N34505	Connector - 7/8-14 (#10) MJIC x 7/8-14 (#10) MORB	1
5	C-4368	Oil Line - 5/8 x 88 Lg w/ 7/8-14 FJIC	2
6	N37038	Hyd Hose - 3/4 x 84 Lg w/ 1 1/16-12 MORB x 1 1/16-12 FJIC	2
7	N53494	Hyd Hose - 3/4 x 66 - 1 1/16-12 FJIC x 7/8-14 FJIC swivel end	1
8	N53496	Hyd Hose - 3/4 x 54 - 1 1/16-12 FJIC x 7/8-14 FJIC swivel end	1
9	N55169	Hyd Hose - 1/2 x 108 Lg w/7/8-14 MJIC x 7/8-14 FJIC	2
10	N37421	Hyd Hose - 3/8 x 108 - 3/4-16 FJIC x 9/16-18 FJIC w/90 Bend	1
11	N19337	Connector - 7/8-14 MJIC x 1 1/16-12 FJIC	2
12	N15990	Connector - 1 1/16-12 MJIC x 1 1/16-12 MORB	2
13	N19549	Tee - 1 1/16 MJIC	1
14	N21189	90 Elbow - Swivel - 1 1/16-12 FJIC x 1 1/16-12 MJIC	1
15	N16359	90 Elbow - 1 1/16-12 MJIC x 1 1/16-12 MORB	1
16	N29358	Connector - 9/16-18 MJIC x 9/16-18 MORB	1
17	W-522	Lockwasher - 5/16	2
18	W-513	Hex Nut - 5/16	2
19	S-1303	Hex Bolt - 5/16 x 2 Lg	2
20	N16621	Plug - 9/16-18 MORB	1
21	N34577	Tag - Hose ID Tank - Fan/Auger - RETURN	1
22	N34576	Tag - Hose ID - Tank - Fan/Auger - PRESSURE	1
23	N34578	Tag - Hose ID - Tank - Fan/Auger - CASE DRAIN	1
24	C14840	Connector - 3/4-16 MORB x 7/8-14 MJIC	1
24A	C15330	Connector - 3/4-16 MORB x 3/4-16 MJIC (10178)	1
24B	C-4469	Connector - 7/8-14 (#10) MJIC	8
25	K50834	3/8 Flat Face Tip - 3/4-16 FORB	1
26	N37914	3/4 Male Pioneer Tip - 1 1/16-12 FORB	2
	N69669	Kit-Hydraulic Tip Adapter -1/2 Male Pioneer (See Page 14-63 for details)	
27	N34498	1/2 Male Pioneer Tip - 7/8-14 FORB	7
28	N34488	1/2 Female Pioneer Coupler - 7/8-14 FORB	6
29	S37662	Tag - Hose ID - Wing Lift - UNFOLD	2
30	S37661	Tag - Hose ID - Wing Lift - FOLD	2
31	S37663	Tag - Hose ID - Depth Control - LOWER	2
32	S37664	Tag - Hose ID - Depth Control - RAISE	2
33	S44456	Tag - Hose ID - Case Drain	2
34	N34620	Connector - 7/8-14 FJIC x 7/8-14 MORB	6
35	H24393	90 Elbow - 7/8-14 MJIC	7
36	N37348	Oil Line - 5/8 x 84 Lg w/ 7/8-14 FJIC	12
37	D-4838	Tie Strap - 14 1/2 Lg	15
37A	D-4951	Tie Strap - 7 3/8 Lg	15
37B	S13336	Tie Strap - 24 Lg	3
38	N16608	Coupler Clamp - Female Pioneer	6
39	N19458	Spacer Bushing - 0.540 OD x 2	6
39A	N19155	Spacer Bushing - 0.540 OD x 1/2	2
40	S13337	Hex Bolt - 5/16 x 6 Lg	2
41	W-469	Hex Bolt - 1/4 x 3/4 Lg	6
42	W-521	Lockwasher - 1/4	6
43	W-512	Hex Nut - 1/4	6
44	W-522	Lockwasher - 5/16	2
45	W-513	Hex Nut - 5/16	2
46	N37403	Hyd Hose - 1/2 x 192 Lg - 7/8-14 MJIC x 7/8-14 MORB	4
47	N55169	Hyd Hose - 1/2 x 108 Lg - 7/8-14 MJIC x 7/8-14 FJIC Swivel	2
48	C-4387	Hyd Hose - 1/2 x 36 Lg w/7/8-14 MJIC x 7/8-14 FJIC Swivel	6
49	C-4698	Nylon Oil Line Clamp (VRT-4) (STD-4) (Tillage-24)	32
50	N16257	Oil Line Spacer - 3/8 ID x 5/8 OD x 5/8 Lg (VRT)	2
51	C-1550	Hex Bolt - 3/8 x 4 Lg (VRT) (Standard would use 2 1/4 Lg Bolt)	2
51A	C-3664	Hex Bolt - 3/8 x 5 1/2 Lg	4
52	W-538	Flatwasher - 3/8	6

Prior to June 2018 -
Prior to June 2018 -

9365, 9450 Tow Between Hydraulic Drive - Fan VRT

Item	Part No.	Description	Qty
53	M-3388	Locknut - 3/8	6
Auger System			
54	C-4468	Auger - Hyd Hose - 1/2 x 24 Lg w/7/8-14 FJIC	2
55	K-5806	Auger - 90 Elbow - Swivel - 7/8-14 MJIC x 7/8-14 FJIC	2
56	N47903	Auger - Connector - 7/8-14 MJIC x 1 1/16-12 MORB	2
57	N58555	Auger - Valve Block	1
VRT System			
58	N45195	Manifold Assembly - 4 Valve Bank (See Page 17-24 for Details)	1
59	N37845	Ball Valve (Handle - N66053)	1
60	N47903	Connector - 7/8-14 MJIC x 1 1/16-12 MORB	2
61	N34620	Connector - Swivel - 7/8-14 MORB x 7/8-14 FJIC	1
62	N19337	Connector - 7/8-14 MJIC x 1 1/16-12 FJIC	1
63	N29356	Swivel Tee - (1) - 1 1/16-12 FJIC x (2) - 1 1/16-12 MJIC	1
64	N21189	90 Elbow - Swivel - 1 1/16-12 FJIC x 1 1/16-12 MJIC	1
65	C-4368	Oil Line - 5/8 x 88 Lg w/ 7/8-14 FJIC	1
66	N55169	Hyd Hose - 1/2 x 108 Lg w/7/8-14 MJIC x 7/8-14 FJIC	1
67	C-4387	Hyd Hose - 1/2 x 36 Lg w/7/8-14 MJIC x 7/8-14 FJIC	2
68	N29363	9365 - Hyd Hose - 3/8 x 60 Lg w/3/4-16 FJIC x 9/16-18FJIC w/90 Bend	2
	N29362	9450 - Hyd Hose - 3/8 x 48 Lg w/3/4-16 FJIC x 9/16-18FJIC w/90 Bend	2
69	N29364	ALL - Hyd Hose - 3/8 x 72 Lg w/3/4-16 FJIC x 9/16-18 FJIC w/90 Bend	2
70	N37421	9450 Hyd Hose - 3/8 x 108 Lg w/3/4-16 FJIC x 9/16-18 FJIC w/90 Bend	2
72	N29319	Hydraulic Motor - DANFOSS	3
	N48071	Seal Kit for DANFOSS DH80 series 1 motor	
	N42365	Seal Kit for WHITE RS series motor	
73	N51990	45 Elbow - 3/4-16 MJIC x 7/8-14 MORB	8
74	N29358	Connector - 9/16-18 MJIC x 9/16-18 MORB	8
75	N29365	Plug - 9/16-18 MORB	2
76	C15318	90 Elbow - 7/8-14 MJIC x 7/8-14 MORB	2
77	H18746	Tee - Swivel - (2) 7/8-14 MJIC x (1) 7/8-14 FJIC (MMF)	1
78	N58670	Case Drain Header	1
79	C28505	Plug - 3/4-16 MORB	1
80	N34646	90 Elbow - 7/8-14 MJIC x 1 1/16-12 MORB	1
81	F-4565	Hyd Hose - 1/2 x 60 Lg w/7/8-14 FJIC	1
82	C15319	Hex Bolt - 1/4 x 2 1/2 Lg	3
83	N56180	Priority Flow Valve (Optional for Single Fan) (N59025 Cartridge)	1
84	N37849	Connector - 1 1/16-12 MORB x 1 1/16-12 FJIC	1
85	N64583	Coupler - Test Port - 7/16-20 (#4) MORB	3
86	K62978	Tee - Gauge Port - 7/8-14 (#10) MJIC x 7/8-14 (#10) FJIC x 7/16-20 (#4) FORB	3
106	N59002	Apollo - Rear Template - mount on top of oil lines	1
107	N59003	Apollo - Middle Template - mount on top of oil lines	1
108	N59004	Apollo - Front Template - mount on top of oil lines	1
109	D-5259	Carriage Bolt - 5/16 x 3/4 Lg	5
110	D-5278	Locknut - 5/16 Serrrated Flange	5
	N19023	Decal - Danger “HOT” (Not Shown)	1
	N36263	Decal - Warning “BURN HAZARD” (Not Shown)	1
	N36443	Decal - Auger “LEVER POSITION” (Not Shown)	1
	N19031	Decal - “AUGER / FAN” (Not Shown)	1
	N49783	Decal - “CALIBRAITON / FAN” (Not Shown)	1

- Prior to June 2018 -
- Prior to June 2018 -

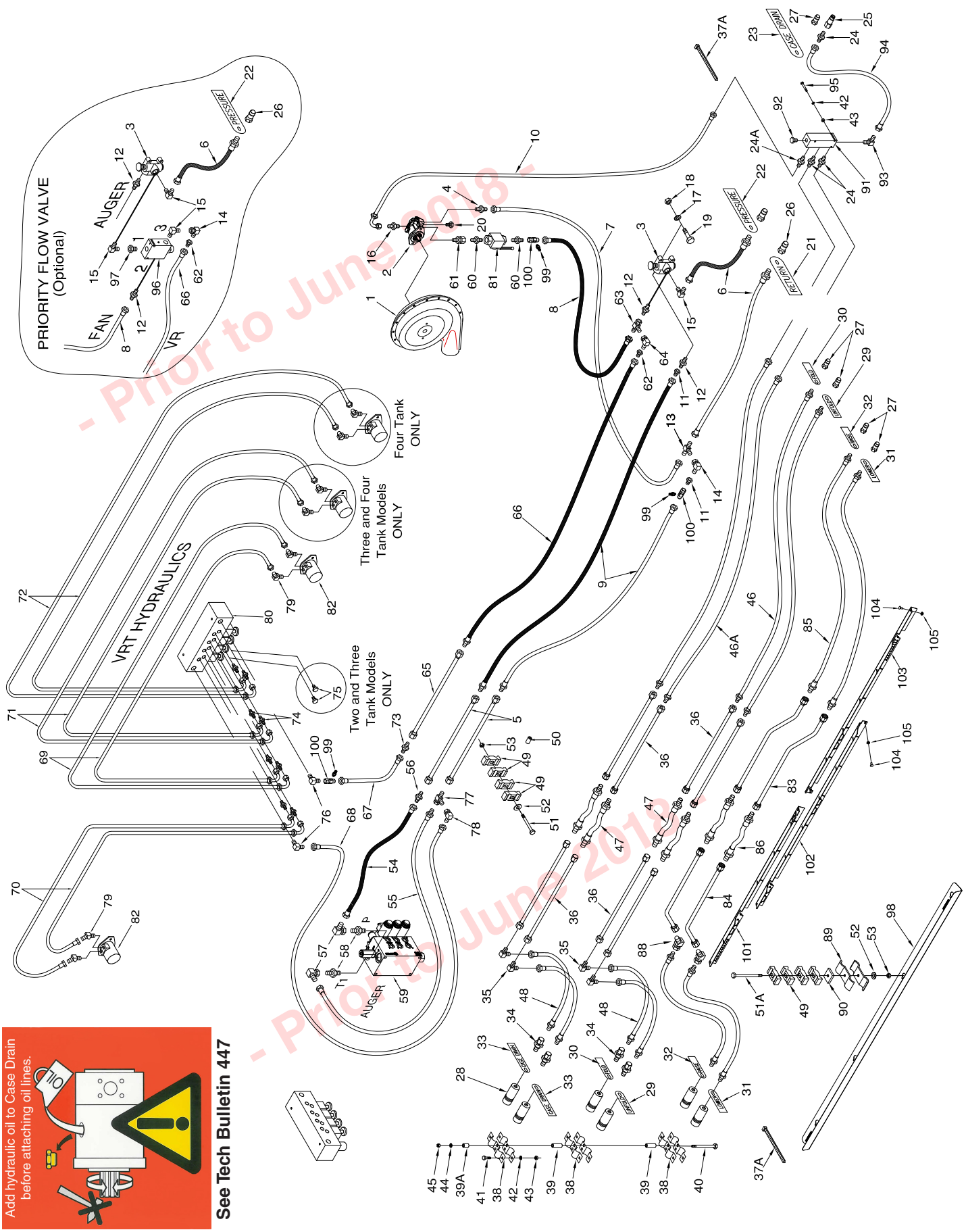

- Prior to June 2018 -
- Prior to June 2018 -

9445, 9550, 9650 Tow Between Hydraulic Drive - Fan VRT

Item	Part No.	Description	Qty
1	* * * * *	Fan - See Section 11	1
2	N53243	Hydraulic Motor W/ Internal Check Valve - Rexroth - See Section 11	2
3	N37514	Selector Valve (Seal Kit # N31603) (Knob # C26358)	1
4	N34505	Connector - 7/8-14 (#10) MJIC x 7/8-14 (#10) MORB	1
5	C-4370	Oil Line - 5/8 x 128 Lg w/ 7/8-14 FJIC	2
6	N37038	Hyd Hose - 3/4 x 84 Lg w/ 1 1/16-12 MORB x 1 1/16-12 FJIC	2
7	N53494	Hyd Hose - 3/4 x 66 - 1 1/16-12 FJIC x 7/8-14 FJIC swivel end	1
8	N53496	Hyd Hose - 3/4 x 54 - 1 1/16-12 FJIC x 7/8-14 FJIC swivel end	1
9	N55169	Hyd Hose - 1/2 x 108 Lg - 7/8-14 MJIC x 7/8-14 FJIC swivel end	2
10	N37421	Hyd Hose - 3/8 x 108 - 3/4-16 FJIC x 9/16-18 FJIC w/90 Bend	1
11	N19337	Connector - 7/8-14 MJIC x 1 1/16-12 FJIC	2
12	N15990	Connector - 1 1/16-12 MJIC x 1 1/16-12 MORB	2
13	N19549	Tee - 1 1/16 MJIC	1
14	N21189	90 Elbow - Swivel - 1 1/16-12 FJIC x 1 1/16-12 MJIC	1
15	N16359	90 Elbow - 1 1/16-12 MJIC x 1 1/16-12 MORB	1
16	N29358	Connector - 9/16-18 MJIC x 9/16-18 MORB	1
17	W-522	Lockwasher - 5/16	2
18	W-513	Hex Nut - 5/16	2
19	S-1303	Hex Bolt - 5/16 x 2 Lg	2
20	N16621	Plug - 9/16-18 MORB	1
21	N34577	Tag - Hose ID Tank - Fan/Auger - RETURN	1
22	N34576	Tag - Hose ID - Tank - Fan/Auger - PRESSURE	1
23	N34578	Tag - Hose ID - Tank - Fan/Auger - CASE DRAIN	1
24	C14840	Connector - 3/4-16 MORB x 7/8-14 MJIC	1
24A	C15330	Connector - 3/4-16 MORB x 3/4-16 MJIC (10178)	1
25	K50834	3/8 Flat Face Tip - 3/4-16 FORB	1
26	N37914	3/4 Male Pioneer Tip - 1 1/16-12 FORB	2
	N69669	Kit-Hydraulic Tip Adapter -1/2 Male Pioneer (See Page 14-63 for details)	
27	N34498	1/2 Male Pioneer Tip - 7/8-14 FORB	7
28	N34488	1/2 Female Pioneer Coupler - 7/8-14 FORB	6
29	S37662	Tag - Hose ID - Wing Lift - UNFOLD	2
30	S37661	Tag - Hose ID - Wing Lift - FOLD	2
31	S37663	Tag - Hose ID - Depth Control - LOWER	2
32	S37664	Tag - Hose ID - Depth Control - RAISE	2
33	S44456	Tag - Hose ID - Case Drain	2
34	N34620	Connector - 7/8-14 FJIC x 7/8-14 MORB	4
35	H24393	90 Elbow - 7/8-14 MJIC	6
36	N37348	Oil Line - 5/8 x 84 Lg w/ 7/8-14 FJIC	8
37	D-4838	Tie Strap - 14 1/2 Lg	15
37A	D-4951	Tie Strap - 7 3/8 Lg	15
37B	S13336	Tie Strap - 24 Lg	3
38	N16608	Coupler Clamp - Female Pioneer	6
39	N19458	Spacer Bushing - 0.540 OD x 2	6
39A	N19155	Spacer Bushing - 0.540 OD x 1/2	2
40	S13337	Hex Bolt - 5/16 x 6 Lg	2
41	W-469	Hex Bolt - 1/4 x 3/4 Lg	6
42	W-521	Lockwasher - 1/4	6
43	W-512	Hex Nut - 1/4	6
44	W-522	Lockwasher - 5/16	2
45	W-513	Hex Nut - 5/16	2
46	N37403	Hyd Hose - 1/2 x 192 Lg - 7/8-14 MJIC x 7/8-14 MORB	2
46A	S22403	Hyd Hose - 1/2 x 120 Lg - 7/8-14 MJIC x 7/8-14 FJIC	2
47	C-4386	Hyd Hose - 1/2 x 36 Lg w/7/8-14 MJIC	4
48	C-4387	Hyd Hose - 1/2 x 36 Lg w/7/8-14 MJIC x 7/8-14 FJIC Swivel	4
49	C-4698	Nylon Oil Line Clamp (VRT-4) (STD-4) (Tillage-24)	28
50	N16257	Oil Line Spacer - 3/8 ID x 5/8 OD x 5/8 Lg (VRT)	3
51	C-1550	Hex Bolt - 3/8 x 4 Lg (VRT) (Standard would use 2 1/4 Lg Bolt)	3
51A	C-3664	Hex Bolt - 3/8 x 5 1/2 Lg	4
52	W-538	Flatwasher - 3/8	7
53	M-3388	Locknut - 3/8	**7**

- Prior to June 2018 -

9445, 9550, 9650 Tow Between Hydraulic Drive - Fan VRT

Item	Part No.	Description	Qty
Auger System			
54	C26344	Auger - Hyd Hose - 1/2 x 42 Lg w/7/8-14 FJIC	1
55	C-4388	Auger - Hyd Hose - 1/2 x 48 Lg w/ 7/8-14 MJIC x 7/8-14 FJIC	1
56	C-4469	Connector - 7/8-14 MJIC	1
57	K-5806	Auger - 90 Elbow - Swivel - 7/8-14 MJIC x 7/8-14 FJIC	2
58	N47903	Auger - Connector - 7/8-14 MJIC x 1 1/16-12 MORB	2
59	N58555	Auger - Valve Block	1
VRT System			
60	N47903	Connector - 7/8-14 MJIC x 1 1/16-12 MORB	2
61	N34620	Connector - Swivel - 7/8-14 MORB x 7/8-14 FJIC	1
62	N19337	Connector - 7/8-14 MJIC x 1 1/16-12 FJIC	1
63	N29356	Swivel Tee - (1) - 1 1/16-12 FJIC x (2) - 1 1/16-12 MJIC	1
64	N21189	90 Elbow - Swivel - 1 1/16-12 FJIC x 1 1/16-12 MJIC	1
65	C-4370	Oil Line - 5/8 x 128 Lg w/ 7/8-14 FJIC	1
66	N55169	Hyd Hose - 1/2 x 108 Lg w/7/8-14 MJIC x 7/8-14 FJIC	1
67	C26344	Hyd Hose - 1/2 x 42 Lg w/7/8-14 FJIC	1
68	K-5685	Hyd Hose - 1/2 x 48 Lg w/7/8-14 FJIC	1
69	N29364	9445 - Hyd Hose - 3/8 x 72 Lg w/3/4-16 FJIC x 9/16-18 FJIC w/90 Bend	2
	N29363	9550 & 9650 - Hyd Hose - 3/8 x 60 Lg w/3/4-16 FJIC x 9/16-18FJIC w/90 Bend	2
70	N29364	ALL - Hyd Hose - 3/8 x 72 Lg w/3/4-16 FJIC x 9/16-18 FJIC w/90 Bend	2
71	N51952	9550 & 9650 - Hyd Hose - 3/8 x 96 Lg w/3/4-16 FJIC x 9/16-18 FJIC w/90 Bend	2
72	N51951	9650 - Hyd Hose - 3/8 x 144 Lg w/3/4-16 FJIC x 9/16-18 FJIC w/90 Bend	2
73	C-4469	Connector - 7/8-14 MJIC	1
74	N29358	Connector - 9/16-18 MJIC x 9/16-18 MORB	8
75	N29365	Plug - 9/16-18 MORB	2
76	C15318	90 Elbow - 7/8-14 MJIC x 7/8-14 MORB	2
77	H18746	Tee - Swivel - (2) 7/8-14 MJIC x (1) 7/8-14 FJIC (MMF)	1
78	K-5806	90 Elbow - Swivel - 7/8-14 MJIC x 7/8-14 FJIC	1
79	N51990	45 Elbow - 3/4-16 MJIC x 7/8-14 MORB	8
80	N45195	Manifold Assembly - 4 Valve Bank (See Page 17-24 for Details)	1
81	N37845	Ball Valve (Handle - N66053)	1
82	N29319	Hydraulic Motor - DANFOSS	4
	N48071	Seal Kit for DANFOSS DH80 series 1 motor	
	N42365	Seal Kit for WHITE RS series motor	
	N19023	Decal - Danger “HOT” (Not Shown)	1
	N36263	Decal - Warning “BURN HAZARD” (Not Shown)	1
	N36443	Decal - Auger “LEVER POSITION” (Not Shown)	1
	N19031	Decal - “AUGER / FAN” (Not Shown)	1
	N49783	Decal - “CALIBRAITON / FAN” (Not Shown)	1
83	N36833	Oil Line - 1 x 94 Lg w/ 1 5/16-12 FJIC (#16)	2
84	N27601	Oil Line - 1 x 108 Lg w/45 Bend w/1 1/16-12 FJIC	2
85	N58170	Hyd Hose - 3/4 x 192 Lg - 1 5/16-12 MJIC (#16) x 7/8-14 MORB (#10)	2
86	N58167	Hyd Hose - 3/4 x 12 Lg - 1 5/16-12 MJIC Ends	2
87	N58169	Hyd Hose - 3/4 x 36 Lg - 1 5/16 -12 MJIC (#16) x 7/8 -14 MORB	2
88	N36382	45 Elbow - 1 5/16-12 MJIC x 1 5/16-12 FJIC Swivel	2
89	D-4808	Oil Line Clamp	8
90	S31476	Plate Spacer - 1 1/2 x 1 1/2 x 1/2 thick	4
91	N58670	Case Drain Header	1
92	C28505	Plug - 3/4-16 MORB	1
93	N34646	90 Elbow - 7/8-14 MJIC x 1 1/16-12 MORB	1
94	F-4565	Hyd Hose - 1/2 x 60 Lg w/7/8-14 FJIC	1
95	C15319	Hex Bolt - 1/4 x 2 1/2 Lg	3
96	N56180	Priority Flow Valve (Optional for Single Fan) (N59025 Cartridge)	1
97	N37849	Connector - 1 1/16-12 MORB x 1 1/16-12 FJIC	1
98	N53009	Panel - Oil Line Cover	2
99	N64583	Coupler - Test Port - 7/16-20 (#4) MORB	3
100	K62978	Tee - Gauge Port - 7/8-14 (#10) MJIC x 7/8-14 (#10) FJIC x 7/16-20 (#4) FORB	3
108	N58940	Apollo - Rear Template	1
109	N58941	Apollo - Middle Template	1
110	N58942	Apollo - Front Template	1
111	D-5259	Carriage Bolt - 5/16 x 3/4 Lg	5
112	D-5278	Locknut - 5/16 Serrrated Flange	5

Starting 9-1-2018 - 2020 to June 2019 -

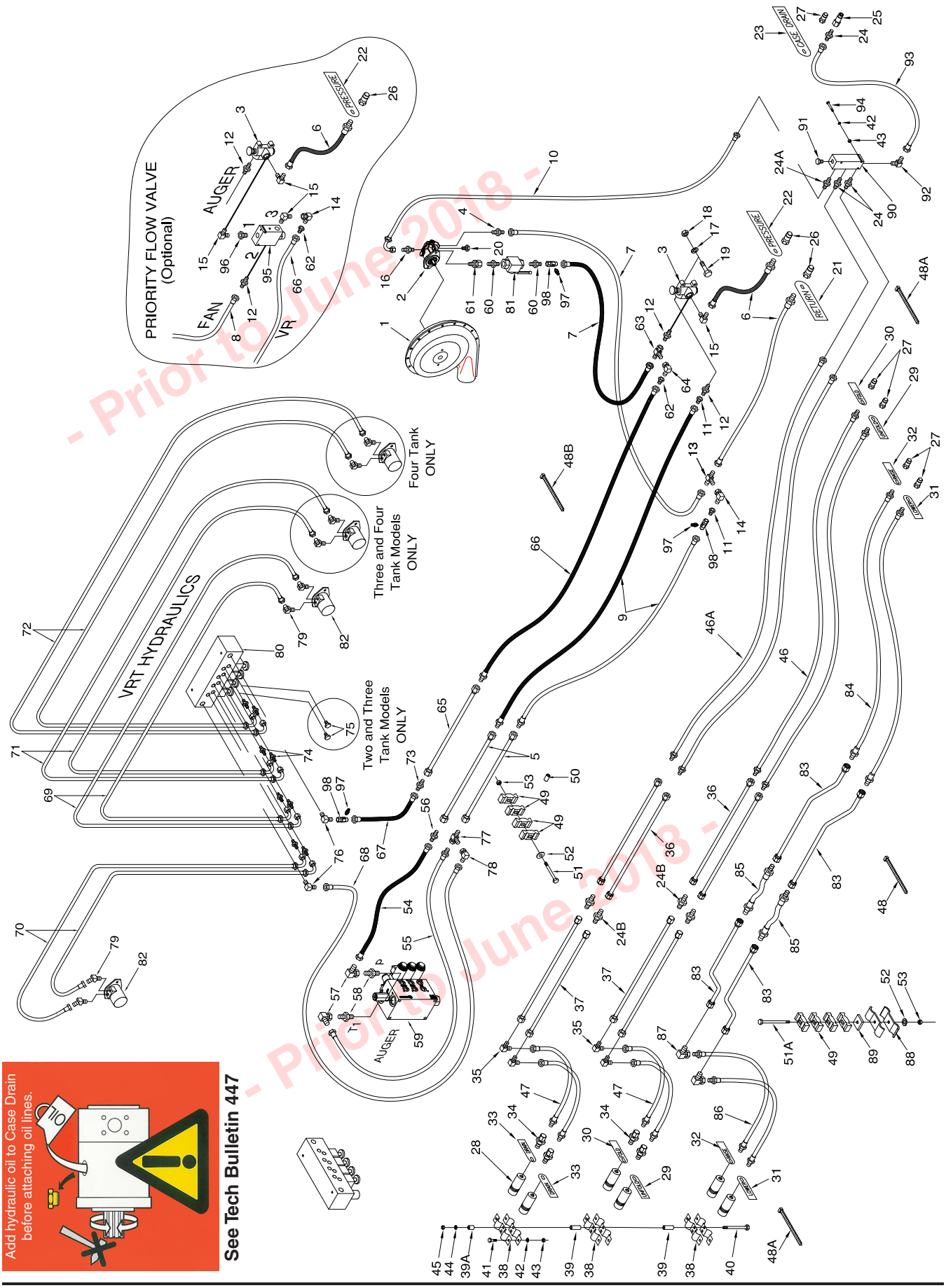

- Prior to June 2018 -
- Prior to June 2018 -

9800 Tow Between Hydraulic Drive - Fan VRT

Item	Part No.	Description	Qty
1	* * * * *	Fan - See Section 11	1
2	N53243	Hydraulic Motor W/ Internal Check Valve - Rexroth - See Section 11	2
3	N37514	Selector Valve (Seal Kit # N31603) (Knob # C26358)	1
4	N34505	Connector - 7/8-14 (#10) MJIC x 7/8-14 (#10) MORB	1
5	C-4370	Oil Line - 5/8 x 128 Lg w/ 7/8-14 FJIC	2
6	N37038	Hyd Hose - 3/4 x 84 Lg w/ 1 1/16-12 MORB x 1 1/16-12 FJIC	2
7	N53494	Hyd Hose - 3/4 x 66 - 1 1/16-12 FJIC x 7/8-14 FJIC swivel end	2
8	* * * * *		
9	N55169	Hyd Hose - 1/2 x 108 Lg w/7/8-14 MJIC x 7/8-14 FJIC swivel end	2
10	N37421	Hyd Hose - 3/8 x 108 - 3/4-16 FJIC x 9/16-18 FJIC w/90 Bend	1
11	N19337	Connector - 7/8-14 MJIC x 1 1/16-12 FJIC	2
12	N15990	Connector - 1 1/16-12 MJIC x 1 1/16-12 MORB	2
13	N19549	Tee - 1 1/16 MJIC	1
14	N21189	90 Elbow - Swivel - 1 1/16-12 FJIC x 1 1/16-12 MJIC	1
15	N16359	90 Elbow - 1 1/16-12 MJIC x 1 1/16-12 MORB	1
16	N29358	Connector - 9/16-18 MJIC x 9/16-18 MORB	1
17	W-522	Lockwasher - 5/16	2
18	W-513	Hex Nut - 5/16	2
19	S-1303	Hex Bolt - 5/16 x 2 Lg	2
20	N16621	Plug - 9/16-18 MORB	1
21	N34577	Tag - Hose ID Tank - Fan/Auger - RETURN	1
22	N34576	Tag - Hose ID - Tank - Fan/Auger - PRESSURE	1
23	N34578	Tag - Hose ID - Tank - Fan/Auger - CASE DRAIN	1
24	C14840	Connector - 3/4-16 MORB x 7/8-14 MJIC	3
24A	C15330	Connector - 3/4-16 MORB x 3/4-16 MJIC (10178)	1
24B	C-4469	Connector - 7/8-14 (#10) MJIC	4
25	K50834	3/8 Flat Face Tip - 3/4-16 FORB	1
26	N37914	3/4 Male Pioneer Tip - 1 1/16-12 FORB	2
	N69669	Kit-Hydraulic Tip Adapter -1/2 Male Pioneer (See Page 14-63 for details)	
27	N34498	1/2 Male Pioneer Tip - 7/8-14 FORB	7
28	N34488	1/2 Female Pioneer Coupler - 7/8-14 FORB	6
29	S37662	Tag - Hose ID - Wing Lift - UNFOLD	2
30	S37661	Tag - Hose ID - Wing Lift - FOLD	2
31	S37663	Tag - Hose ID - Depth Control - LOWER	2
32	S37664	Tag - Hose ID - Depth Control - RAISE	2
33	S44456	Tag - Hose ID - Case Drain	2
34	N34620	Connector - 7/8-14 FJIC x 7/8-14 MORB	4
35	H24393	90 Elbow - 7/8-14 MJIC	6
36	N37348	Oil Line - 5/8 x 84 Lg w/ 7/8-14 FJIC	4
37	C-4370	Oil Line - 5/8 x 128 Lg w/ 7/8-14 FJIC	4
38	N16608	Coupler Clamp - Female Pioneer	6
39	N19458	Spacer Bushing - 0.540 OD x 2	6
39A	N19155	Spacer Bushing - 0.540 OD x 1/2	2
40	S13337	Hex Bolt - 5/16 x 6 Lg	2
41	W-469	Hex Bolt - 1/4 x 3/4 Lg	6
42	W-521	Lockwasher - 1/4	9
43	W-512	Hex Nut - 1/4	9
44	W-522	Lockwasher - 5/16	2
45	W-513	Hex Nut - 5/16	2
46	N37403	Hyd Hose - 1/2 x 192 Lg - 7/8-14 MJIC x 7/8-14 MORB	2
46A	S22403	Hyd Hose - 1/2 x 120 Lg w/7/8-14 FJIC	2
47	C-4387	Hyd Hose - 1/2 x 36 Lg w/7/8-14 MJIC x 7/8-14 FJIC Swivel	4
48	D-4838	Tie Strap - 14 1/2 Lg	15
48A	D-4951	Tie Strap - 7 3/8 Lg	15
48B	S13336	Tie Strap - 24 Lg	3
49	C-4698	Nylon Oil Line Clamp (VRT-4) (STD-4) (Tillage-24)	36
50	N16257	Oil Line Spacer - 3/8 ID x 5/8 OD x 5/8 Lg (VRT)	3
51	C-1550	Hex Bolt - 3/8 x 4 Lg (VRT) (Standard would use 2 1/4 Lg Bolt)	3
51A	C-3664	Hex Bolt - 3/8 x 5 1/2 Lg	4
52	W-538	Flatwasher - 3/8	7
53	M-3388	Locknut - 3/8	7

- Prior to June 2018 -
- June 2018 to June 2018 -

9800 Tow Between Hydraulic Drive - Fan VRT

Item	Part No.	Description	Qty
Auger System			
54	C26344	Auger - Hyd Hose - 1/2 x 42 Lg w/7/8-14 FJIC	1
55	C-4388	Auger - Hyd Hose - 1/2 x 48 Lg w/ 7/8-14 MJIC x 7/8-14 FJIC	1
56	C-4469	Connector - 7/8-14 MJIC	1
57	K-5806	Auger - 90 Elbow - Swivel - 7/8-14 MJIC x 7/8-14 FJIC	2
58	N47903	Auger - Connector - 7/8-14 MJIC x 1 1/16-12 MORB	2
59	N58555	Auger - Valve Block	1
VRT System			
60	N47903	Connector - 7/8-14 MJIC x 1 1/16-12 MORB	2
61	N34620	Connector - Swivel - 7/8-14 MORB x 7/8-14 FJIC	1
62	N19337	Connector - 7/8-14 MJIC x 1 1/16-12 FJIC	1
63	N29356	Swivel Tee - (1) - 1 1/16-12 FJIC x (2) - 1 1/16-12 MJIC	1
64	N21189	90 Elbow - Swivel - 1 1/16-12 FJIC x 1 1/16-12 MJIC	1
65	C-4370	Oil Line - 5/8 x 128 Lg w/ 7/8-14 FJIC	1
66	N55169	Hyd Hose - 1/2 x 108 Lg w/7/8-14 MJIC x 7/8-14 FJIC swivel end	2
67	C26344	Hyd Hose - 1/2 x 42 Lg w/7/8-14 FJIC	1
68	K-5685	Hyd Hose - 1/2 x 48 Lg w/7/8-14 FJIC	1
69	N29364	9445 - Hyd Hose - 3/8 x 72 Lg w/3/4-16 FJIC x 9/16-18 FJIC w/90 Bend	2
	N29363	9550 & 9650 - Hyd Hose - 3/8 x 60 Lg w/3/4-16 FJIC x 9/16-18FJIC w/90 Bend	2
70	N29364	ALL - Hyd Hose - 3/8 x 72 Lg w/3/4-16 FJIC x 9/16-18 FJIC w/90 Bend	2
71	N51952	9550 & 9650 - Hyd Hose - 3/8 x 96 Lg w/3/4-16 FJIC x 9/16-18 FJIC w/90 Bend	2
72	N51951	9650 - Hyd Hose - 3/8 x 144 Lg w/3/4-16 FJIC x 9/16-18 FJIC w/90 Bend	2
73	C-4469	Connector - 7/8-14 MJIC	1
74	N29358	Connector - 9/16-18 MJIC x 9/16-18 MORB	8
75	N29365	Plug - 9/16-18 MORB	2
76	C15318	90 Elbow - 7/8-14 MJIC x 7/8-14 MORB	2
77	H18746	Tee - Swivel - (2) 7/8-14 MJIC x (1) 7/8-14 FJIC (MMF)	1
78	K-5806	90 Elbow - Swivel - 7/8-14 MJIC x 7/8-14 FJIC	1
79	N51990	45 Elbow - 3/4-16 MJIC x 7/8-14 MORB	8
80	N45195	Manifold Assembly - 4 Valve Bank (See Page 17-24 for Details)	1
81	N37845	Ball Valve (Handle - N66053)	1
82	N29319	Hydraulic Motor - DANFOSS	4
	N48071	Seal Kit for DANFOSS DH80 series 1 motor	
	N42365	Seal Kit for WHITE RS series motor	
	N19023	Decal - Danger “HOT” (Not Shown)	1
	N36263	Decal - Warning “BURN HAZARD” (Not Shown)	1
	N36443	Decal - Auger “LEVER POSITION” (Not Shown)	1
	N19031	Decal - “AUGER / FAN” (Not Shown)	1
	N49783	Decal - “CALIBRAITON / FAN” (Not Shown)	1
83	N36833	Oil Line - 1 x 94 Lg w/ 1 5/16-12 FJIC (#16)	8
84	N58170	Hyd Hose - 3/4 x 192 Lg - 1 5/16-12 MJIC (#16) x 7/8-14 MORB (#10)	2
85	N58168	Hyd Hose - 3/4 x 36 Lg - 1 5/16-12 MJIC Ends	2
86	N58169	Hyd Hose - 3/4 x 36 Lg - 1 5/16 -12 MJIC (#16) x 7/8 -14 MORB	2
87	N58171	90 Elbow - 1 5/16-12 MJIC x 1 5/16-12 FJIC Swivel	2
88	D-4808	Oil Line Clamp	8
89	S31476	Plate Spacer - 1 1/2 x 1 1/2 x 1/2 thick	4
90	N58670	Case Drain Header	1
91	C28505	Plug - 3/4-16 MORB	1
92	N34646	90 Elbow - 7/8-14 MJIC x 1 1/16-12 MORB	1
93	F-4565	Hyd Hose - 1/2 x 60 Lg w/7/8-14 FJIC	1
94	C15319	Hex Bolt - 1/4 x 2 1/2 Lg	3
95	N56180	Priority Flow Valve (Optional for Single Fan) (N59025 Cartridge)	1
96	N37849	Connector - 1 1/16-12 MORB x 1 1/16-12 FJIC	1
97	N64583	Coupler - Test Port - 7/16-20 (#4) MORB	3
98	K62978	Tee - Gauge Port - 7/8-14 (#10) MJIC x 7/8-14 (#10) FJIC x 7/16-20 (#4) FORB	3

Serial No. 1-16-2018 - Prior to June 2018 -

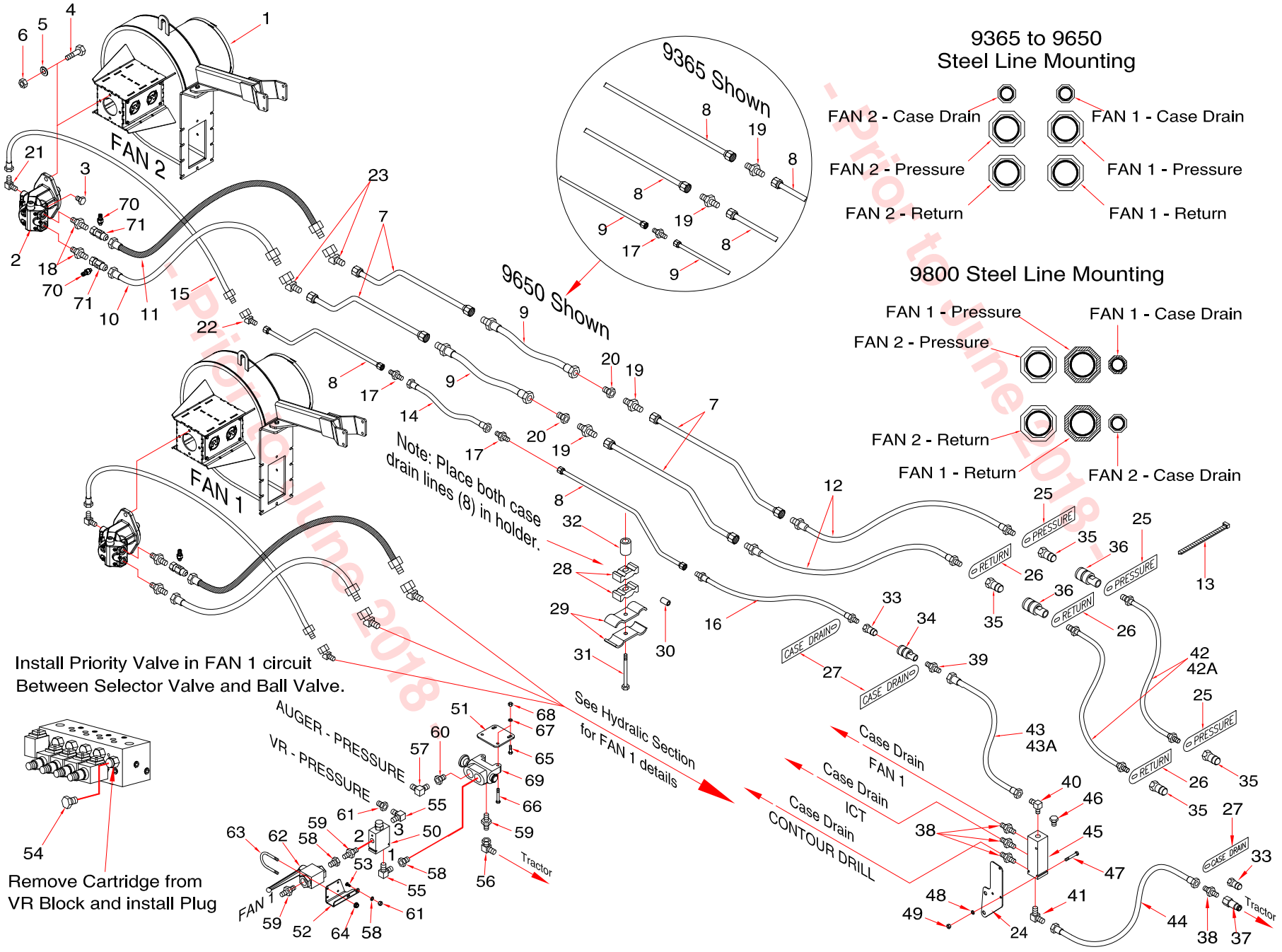

- Prior to June 2018 -

Dual Fan - Tow Behind

Item	Part No.	Description	Qty
1	N37826	Fan - See Section 11	1
2	N53243	Hydraulic Motor W/ Internal Check Valve - Rexroth - See Section 9	1
3	N16621	Plug - 9/16-18 MORB	1
4	S-1189	Hex Bolt - 1/2 x 1 3/4 Lg	2
5	W-525	Lockwasher - 1/2	6
6	W-516	Hex Nut - 1/2	6
7	N36833	Oil Line - 1 x 94 Lg w / 6 Offset Bend x 1 5/16-12 FJIC	4
8	N36444	Oil Line - 1/2 x 94 Lg w / 6 Offset Bend x 3/4-16 FJIC	2
9	N19434	Hyd Hose - 3/4 x 35 Lg w/1 5/16-12 MJIC x 1 1/16-12 FJIC - (9445, 9550, 9650) (9800)	4
10	N53247	Hyd Hose - 3/4 x 72 Lg w/1 5/16-12 MJIC x 7/8-14 FJIC	1
11	N53249	Hyd Hose - 3/4 x 78 Lg w/1 5/16-12 MJIC x 7/8-14 FJIC	1
12	N37037	Hyd Hose - 3/4 x 270 Lg w/1 5/16-12 MJIC x 1 1/16-12 MORB - (9365, 9450, 9535)	2
	N56061	Hyd Hose - 3/4 x 330 Lg w/1 5/16-12 MJIC x 1 1/16-12 MORB - (9445, 9550, 9650) (9800)	2
13	D-4951	Nylon Tie Strap - 7 3/8 Lg	12
14	D10821	Hyd Hose - 3/8 x 38 Lg w/3/4-16 FJIC - (9445, 9550, 9650) (9800)	1
15	N53492	Hyd Hose - 3/8 x 72 Lg w/9/16-18 FJIC x 3/4-16 MJIC	1
16	N37180	Hyd Hose - 3/8 x 270 Lg w/3/4-16 MJIC x 7/8-14 MORB - (9365, 9450, 9535)	1
	N56063	Hyd Hose - 3/8 x 330 Lg w/3/4-16 MJIC x 7/8-14 MORB - (9445, 9550, 9650) (9800)	1
17	N25754	Connector - 3/4-16 MJIC	2
18	N34505	Connector - 7/8-14 (#10) MJIC x 7/8-14 (#10) MORB	2
19	N16346	Connector - 1 5/16-12 MJIC	2
20	N19338	Connector - 1 5/16-12 FJIC x 1 1/16-12 MJIC - (9445, 9550, 9650) (9800)	2
21	N16143	90 Elbow - Swivel - 9/16-18 JIC x 9/16-18 ORB	1
22	N36380	45 Elbow - Swivel - 3/4-16 FJIC x 3/4-16 MJIC	1
23	N36382	45 Elbow - Swivel - 1 5/16-12 FJIC x 1 5/16-12 MJIC	2
24	N58671	Plate - Case Drain Header Mount	1
25	N58340	Tag - Hose ID - Air Tank - Fan 2 - PRESSURE	3
26	N58341	Tag - Hose ID - Air Tank - Fan 2 - RETURN	3
27	N58342	Tag - Hose ID - Air Tank - Fan 2 - CASE DRAIN	3
28	C-4698	Nylon Oil Line Clamp	14
29	D-4808	Oil Line Clamp	8
30	N21632	Oil Line Spacer	4
31	C-3664	Hex Bolt - 3/8 x 5 1/2 Lg	4
32	N15559	Spacer - 0.385 ID x 5/8 OD x 1 Lg	4
33	N34498	1/2 Male Pioneer Tip - 7/8-14 FORB	2
34	N34488	1/2 Pioneer Coupler - 7/8-14 FORB	1
35	N37914	3/4 Male Tip - 1 1/16-12 FORB	2
36	N37915	3/4 Female Coupler - 1 1/16-12 FORB	2
37	K50834	3/8 Flat Face Tip - 3/4-16 FORB	1
38	C14840	Connector - 3/4-16 MORB x 7/8-14 MJIC	4
39	N34505	Connector - Swivel - 7/8-14 MORB x 7/8-14 MJIC	1
40	C24585	90 Elbow - 7/8-14 MJIC x 3/4-16 MORB	1
41	N34646	90 Elbow - 7/8-14 MJIC x 1 1/16-12 MORB	1
42	N37036	Hyd Hose - 3/4 x 396 Lg w/1 1/16-12 MORB (3-Frame Contour Air Drill)	2
42A	N37035	Hyd Hose - 3/4 x 348 Lg w/1 1/16-12 MORB	2
42B	N44955	Hyd Hose - 3/4 x 456 Lg w/1 1/16-12 MORB (5-Frame Contour Air Drill)	2
43	N50099	Hyd Hose - 3/8 x 348 Lg w/7/8-14 FJIC x 7/8-14 FJIC Swivel End	1
43A	N55806	Hyd Hose - 3/8 x 300 Lg w/7/8-14 FJIC Ends	1
43B	N50088	Hyd Hose - 3/8 x 396 Lg w/7/8-14 FJIC Ends (5-Frame Contour Air Drill)	1
44	F-4565	Hyd Hose - 1/2 x 60 Lg w/7/8-14 FJIC	1
45	N58670	Case Drain Header	1
46	C28505	Plug - 3/4-16 MORB - Used on Ports not in use on Case Drain Header	1
47	C15319	Hex Bolt - 1/4 x 2 1/2 Lg	3
48	W-521	Lockwasher - 1/4	3
49	W-512	Hex Nut - 1/4	3
50	N56180	Priority Flow Valve - ADD to FAN 1 circuit (N59025 Cartridge)	1
51	N56181	Plate-VRT Ball Valve Mount	1
52	N56182	Plate-Extension	1
53	S33420	Carriage Bolt - 5/16 x 1 Lg	2
54	N58317	Plug - 7/8-14 MORB	1
55	N16359	90 Elbow - 1 1/16-12 MJIC x 1 1/16-12 MORB	2
56	N21189	90 Elbow - Swivel - 1 1/16-12 FJIC x 1 1/16-12 MJIC	1
57	C15318	90 Elbow - 7/8-14 MJIC x 7/8-14 MORB	1
58	N37849	Connector - 1 1/16-12 MORB x 1 1/16-12 FJIC	1
59	N15990	Connector - 1 1/16-12 MORB x 1 1/16-12 MJIC	2
60	N34499	Connector - 1 1/16-12 MORB x 7/8-14 FORB	1
61	N19337	Connector - 7/8-14 MJIC x 1 1/16-12 FJIC	1
62	N37845	Ball Valve - Fan 1 circuit	1
63	N37846	U-Bolt - 1/4 x 2 x 3	2
64	D-5277	Serrrated Locknut - 1/4	4
65	W-471	Hex Bolt - 5/16 x 1 Lg	2
66	S-1303	Hex Bolt - 5/16 x 2 Lg - Cart Selector Valve Mount	2
67	W-522	Lockwasher - 5/16	4
68	W-513	Hex Nut - 5/16	4
69	N34506	Selector Valve w/1 1/16-12 FORB - Fan 1 circuit	1
70	N64583	Coupler - Test Port - 7/16-20 (#4) MORB	4
71	K62978	Tee - Gauge Port - 7/8-14 (#10) MJIC x 7/8-14 (#10) FJIC x 7/16-20 (#4) FORB	4

Serial Nos. 9600 & 9700 - 9800 to June 2018 -

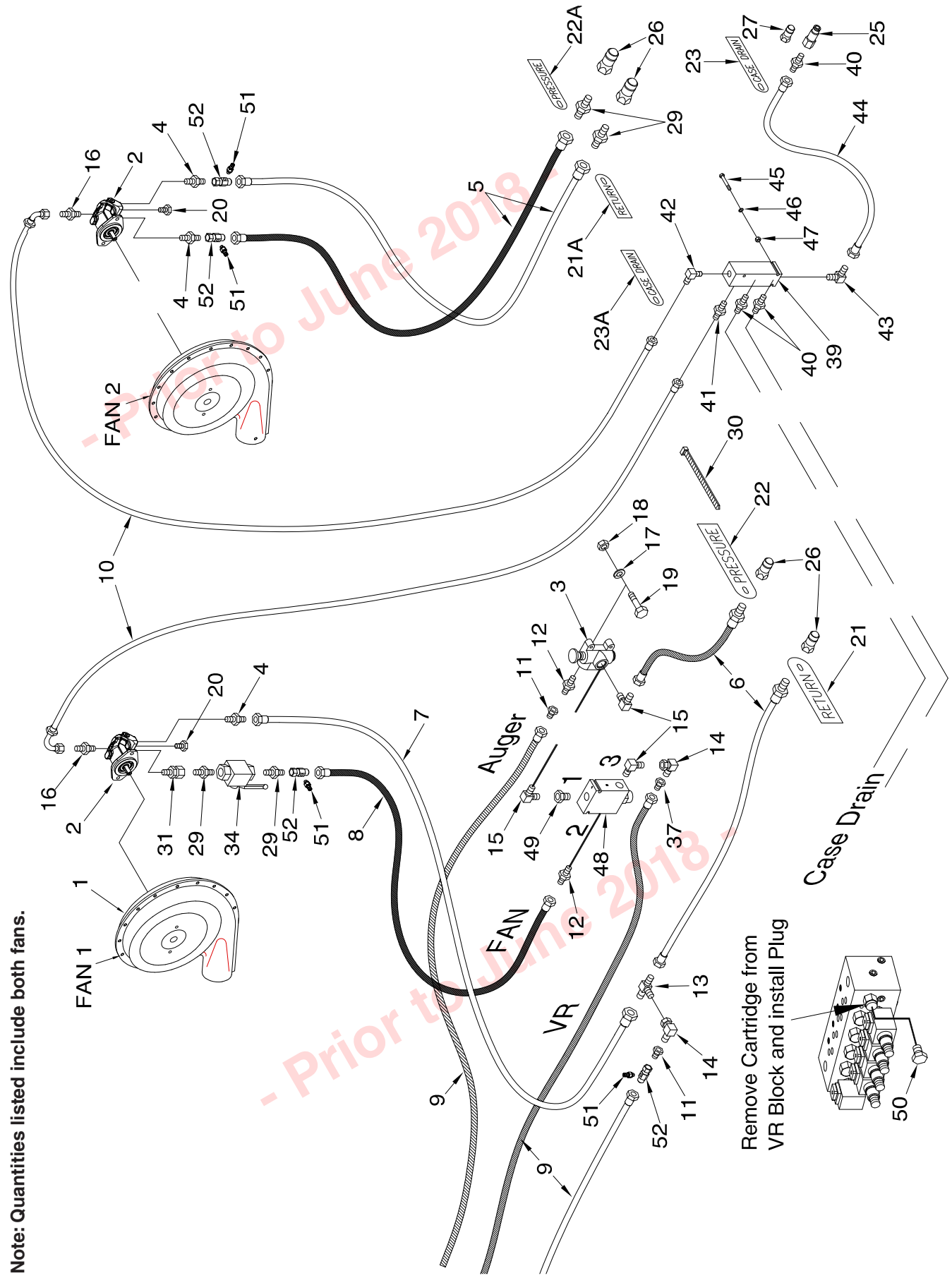

Note: Quantities listed include both fans.

Dual Fan - Tow Between VRT

Item	Part No.	Description	Qty
1	* * * * *	Fan - See Section 11	2
2	N53243	Hydraulic Motor W/ Internal Check Valve - Rexroth - See Section 11	2
3	N37514	Selector Valve (Seal Kit # N31603) (Knob # C26358)	1
4	N34505	Connector - 7/8-14 (#10) MJIC x 7/8-14 (#10) MORB	3
5	N53484	Hyd Hose - 3/4 x 150 Lg - 7/8-14 FJIC swivel ends	2
6	N37038	Hyd Hose - 3/4 x 84 Lg w/ 1 1/16-12 MORB x 1 1/16-12 FJIC	2
7	N53494	Hyd Hose - 3/4 x 66 - 1 1/16-12 FJIC x 7/8-14 FJIC swivel end	1
8	N53496	Hyd Hose - 3/4 x 54 - 1 1/16-12 FJIC x 7/8-14 FJIC swivel end - 9365 to 9650	1
	N53494	Hyd Hose - 3/4 x 66 - 1 1/16-12 FJIC x 7/8-14 FJIC swivel end - 9800	1
9	N55169	Hyd Hose - 1/2 x 108 Lg w/7/8-14 MJIC x 7/8-14 FJIC swivel end	3
10	N37421	Hyd Hose - 3/8 x 108 - 3/4-16 FJIC x 9/16-18 FJIC w/90 Bend	2
11	N19337	Connector - 7/8-14 MJIC x 1 1/16-12 FJIC	2
12	N15990	Connector - 1 1/16-12 MJIC x 1 1/16-12 MORB	2
13	N19549	Tee - 1 1/16 MJIC	1
14	N21189	90 Elbow - Swivel - 1 1/16-12 FJIC x 1 1/16-12 MJIC	2
15	N16359	90 Elbow - 1 1/16-12 MJIC x 1 1/16-12 MORB	3
16	N29358	Connector - 9/16-18 MJIC x 9/16-18 MORB	2
17	W-522	Lockwasher - 5/16	2
18	W-513	Hex Nut - 5/16	2
19	S-1303	Hex Bolt - 5/16 x 2 Lg	2
20	N16621	Plug - 9/16-18 MORB	2
21	N34577	Tag - Hose ID Tank - Fan/Auger - RETURN	1
21A	N58341	Tag - Hose ID - Air Tank - Fan 2 - RETURN	1
22	N34576	Tag - Hose ID - Tank - Fan/Auger - PRESSURE	1
22A	N58340	Tag - Hose ID - Air Tank - Fan 2 - PRESSURE	1
23	N34578	Tag - Hose ID - Tank - Fan/Auger - CASE DRAIN	1
23A	N58342	Tag - Hose ID - Air Tank - Fan 2 - CASE DRAIN	1
24	K50961	Connector - 3/4-16 MORB x 7/8-14 FORB	1
25	K50834	3/8 Flat Face Tip - 3/4-16 FORB	1
26	N37914	3/4 Male Pioneer Tip - 1 1/16-12 FORB	2
	N69669	Kit-Hydraulic Tip Adapter -1/2 Male Pioneer (See Page 14-63 for details)	
27	N34498	1/2 Male Pioneer Tip - 7/8-14 FORB	7
28	N34488	1/2 Female Pioneer Coupler - 7/8-14 FORB	2
29	N47903	Connector - 7/8-14 MJIC x 1 1/16-12 MORB	4
30	D-4951	Nylon Tie Strap -7 3/8 Lg	7
	D-4838	Nylon Tie Strap -14 1/2 Lg	2
31	N34620	Connector - Swivel - 7/8-14 MORB x 7/8-14 FJIC	4
32	C-4394	Tee - (3) 7/8-14 MJIC	1
33	K-5806	90 Elbow - Swivel - 7/8-14 MJIC x 7/8-14 FJIC	1
34	N37845	Ball Valve (Handle - N66053)	1
35	N15990	Connector - 1 1/16-12 MJIC x 1 1/16-12 MORB	1
36	N37849	Connector - 1 1/16-12 FJIC x 1 1/16-12 MORB	1
37	N19337	Connector - 7/8-14 MJIC x 1 1/16-12 FJIC	1
38	N29356	Swivel Tee - (1) - 1 1/16-12 FJIC x (2) - 1 1/16-12 MJIC	1
39	N58670	Case Drain Header	1
40	C14840	Connector - 3/4-16 MORB x 7/8-14 MJIC	3
41	C15330	Connector - 3/4-16 MORB x 3/4-16 MJIC (10178)	1
42	C15317	90 Elbow - 3/4-16 MJIC x 3/4-16 MORB	1
43	N34646	90 Elbow - 7/8-14 MJIC x 1 1/16-12 MORB	1
44	F-4565	Hyd Hose - 1/2 x 60 Lg w/7/8-14 FJIC	1
45	C15319	Hex Bolt - 1/4 x 2 1/2 Lg	3
46	W-521	Lockwasher - 1/4	3
47	W-512	Hex Nut - 1/4	3
48	N56180	Priority Flow Valve (N59025 Cartridge)	1
49	N37849	Connector - 1 1/16-12 MORB x 1 1/16-12 FJIC	1
50	N58317	Plug - 7/8-14 MORB	1
51	N64583	Coupler - Test Port - 7/16-20 (#4) MORB	4
52	K62978	Tee - Gauge Port - 7/8-14 (#10) MJIC x 7/8-14 (#10) FJIC x 7/16-20 (#4) FORB	4

Parts for units built prior to June 2018

Variable Rate System
Valve Manifold - 4 Bank

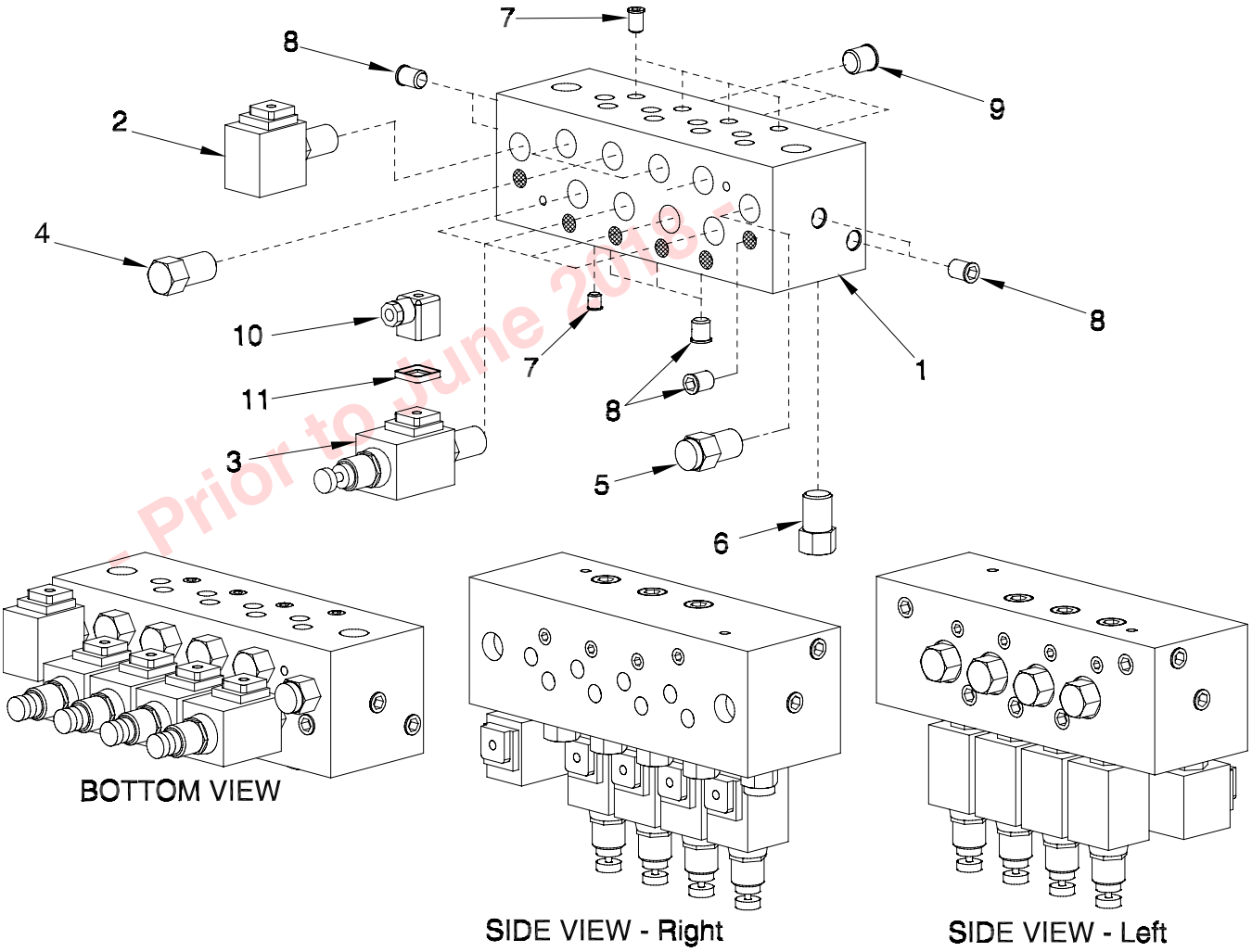

- Prior to June 2018 -

Item	Part No.	Description	Qty
1	N45508	Valve Manifold Block	1
2	N45509	Valve - Dump - Solenoid	1
3	N47440	Valve - Solenoid - Flow Element	4
4	N29324	Valve - Flow Restrictor - Slave	4
5	N29325	Valve - Flow Regulator - Supply	1
6	N29328	Valve - Flow Regulator - Drain	4
7	N45511	Male Plug - 4 SAE Tapered	8
8	N45512	Male Plug - 6 SAE Tapered	15
9	N45513	Male Plug - 8 SAE Tapered	3
10	N29329	DIN Connector - Plug w/Gasket	5
11	N29331	Gasket - DIN Connector	5
	N45195	Valve Manifold Assembly (Includes above items except 10 & 11)	

- Prior to June 2018 -

Section 18:
Hydraulics - Variable Rate
- Prior to March 2014

Section Contents

9365, 9450, 9535 Tow Behind - Fan VRT 18-2
9445, 9550, 9650 Tow Behind - Fan VRT 18-5
9800 Tow Behind - Fan VRT 18-9
9365, 9450 Tow Between Hydraulic - Fan VRT 18-12
9445, 9550, 9650 Tow Between Hydraulic - Fan VRT 18-15
Dual Fan - Tow Behind.....18-18
Dual Fan - Tow Between.....18-20
Valve Manifold - 3 Bank.....18-22
Valve Manifold - 4 Bank.....18-23

Hydraulic
9365, 9450, 9535 Tow Behind - Fan VRT

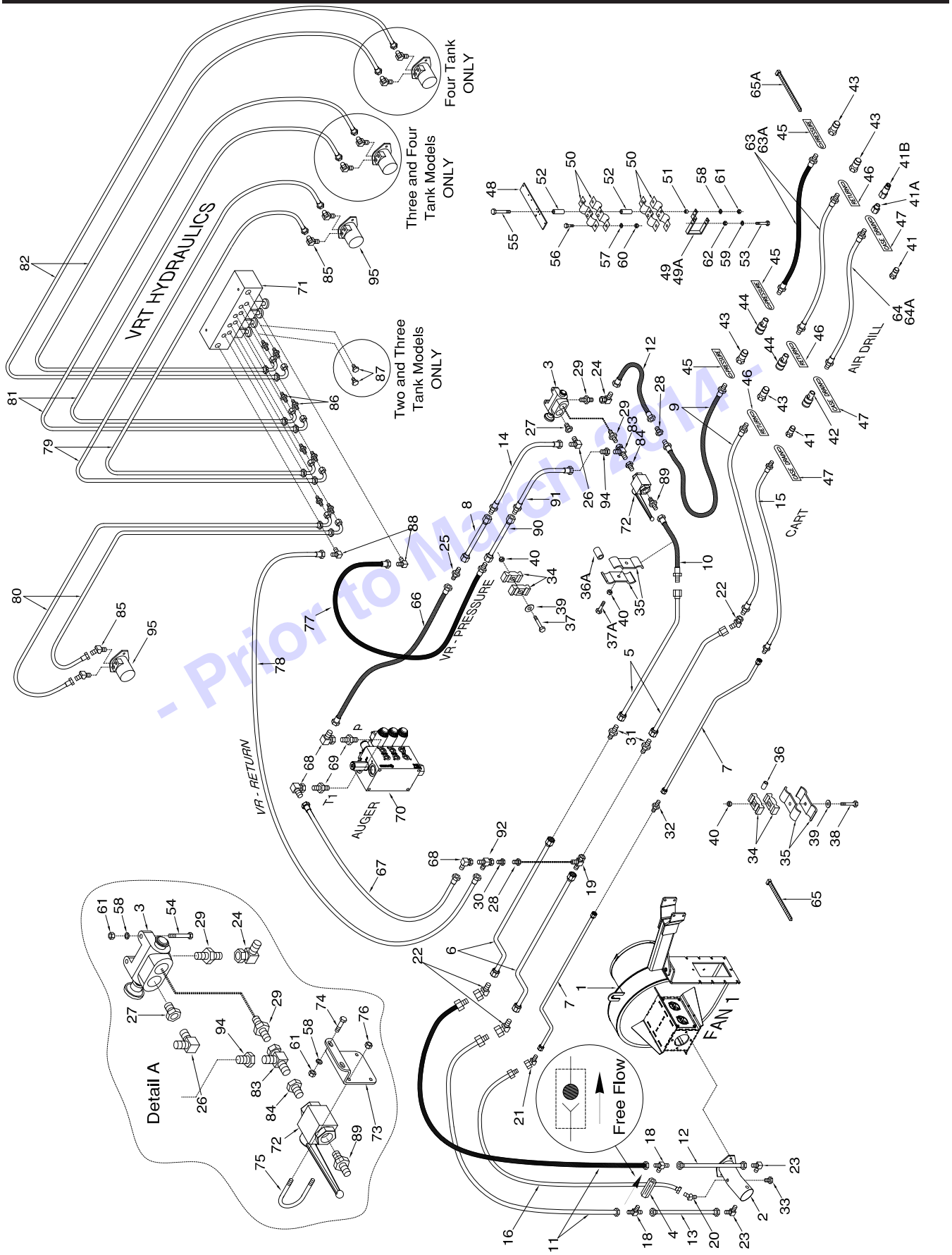

Hydraulic - 9365, 9450, 9535 Tow Behind - Fan VRT

Item	Part No.	Description	Qty
Cart System			
1	* * * * *	Fan - See Section 11	1
2	* * * * *	Hydraulic Motor - Rexroth - See Section 11	1
3	N34506	Selector Valve w/1 1/16-12 FORB - (N31603 - Seal Kit) (C26358 - Knob)	1
4	N16399	Check Valve - 7PSI - 1 1/16-12 ORB	1
5	N19335	Oil Line - 1 x 92 Lg w/45 Bend w/1 1/16-12 FJIC	2
6	N36833	Oil Line - 1 x 94 Lg w / 6 Offset Bend x 1 5/16-12 FJIC	2
7	N36444	Oil Line - 1/2 x 94 Lg w / 6 Offset Bend x 3/4-16 FJIC	2
8	**C-4368**	**Oil Line - 5/8 x 88 Lg w/ 7/8-14 FJIC**	**1**
9	N37037	Hyd Hose - 3/4 x 270 Lg w/1 5/16-12 MJIC x 1 1/16-12 MORB	2
10	N50900	Hyd Hose - 3/4 x 52 Lg w/1 5/16-12 MJIC x 1 1/16-12 FJIC	1
11	N19434	Hyd Hose - 3/4 x 35 Lg w/1 5/16-12 MJIC x 1 1/16-12 FJIC	2
12	**N15991**	**Hyd Hose - 3/4 x 12 Lg w/1 1/16-12 FJIC**	**2**
13	N37900	Hyd Hose - 3/4 x 18 Lg w/1 1/16-12 FJIC	1
14	C-4387	Hyd Hose - 1/2 x 36 Lg w/7/8-14 MJIC x 7/8-14 FJIC	1
15	N37180	Hyd Hose - 3/8 x 270 Lg w/3/4-16 MJIC x 7/8-14 MORB	1
16	N19475	Hyd Hose - 3/8 x 48 Lg w/9/16-18 FJIC x 3/4-16 MJIC	1
17	* * * * *		
18	N16388	Tee - (2) 1 1/16-12 MJIC x (1) 1 1/16-12 MORB	2
19	N19336	Tee - Swivel - (1) 1 5/16-12 FJIC x (2) 1 5/16-12 MJIC	1
20	N19578	45 Elbow - 9/16-18 MJIC x 9/16-18 MORB	1
21	N36380	45 Elbow - Swivel - 3/4-16 FJIC x 3/4-16 MJIC	1
22	N36382	45 Elbow - Swivel - 1 5/16-12 FJIC x 1 5/16-12 MJIC	3
23	N16359	90 Elbow - 1 1/16-12 MJIC x 1 1/16-12 MORB	2
24	N21189	90 Elbow - Swivel - 1 1/16-12 FJIC x 1 1/16-12 MJIC	1
25	**C-4469**	**Connector - 7/8-14 MJIC.**	**1**
26	C15318	90 Elbow - 7/8-14 MJIC x 7/8-14 MORB	1
27	N34499	Connector - 1 1/16-12 MORB x 7/8-14 FORB	1
28	N19338	Connector - 1 1/16-12 MJIC x 1 5/16-12 FJIC	1
29	N15990	Connector 1 1/16-12 MJIC x 1 1/16-12 MORB	2
30	N19337	Connector - 7/8-14 MJIC x 1 1/16-12 FJIC	1
31	N16346	Connector - 1 5/16-12 MJIC	2
32	N25754	Connector - 3/4-16 MJIC	1
33	N16621	Plug - 9/16-18 MORB	1
34	C-4698	Nylon Oil Line Clamp	14
35	D-4808	Oil Line Clamp	10
36	N21632	Oil Line Spacer - 3/8 ID x 9/16 OD x 3/4 Lg	4
36A	D-5011	Oil Line Spacer - .625 ID x 1 OD x 1.562 Lg	1
37	W-479	Hex Bolt - 3/8 x 2 1/4 Lg	3
37A	W-477	Hex Bolt - 3/8 x 1 1/2 Lg	1
38	D-5249	Hex Bolt - 3/8 x 3 1/4 Lg	4
39	W-538	Flatwasher - 3/8	7
40	M-3388	Locknut - 3/8	8
41	**N34498**	**1/2 Male Pioneer Tip - 7/8-14 FORB (Cart - 1)**	**2**
41A	K50961	Connector - 3/4-16 MORB x 7/8-14 FORB	1
41B	K50834	3/8 Flat Face Tip - 3/4-16 FORB	1
42	N34488	1/2 Female Pioneer Coupler - 7/8-14 FORB	1
43	**N37914**	**3/4 Male Pioneer Tip - 1 1/16-12 FORB (Cart - 2)**	**4**
	N69669	Kit-Hydraulic Tip Adapter -1/2 Male Pioneer (See Page 14-63 for details)	
44	N37915	3/4 Female Pioneer Coupler - 1 1/16-12 FORB	2
45	N34576	Tag - Hose ID - Air Tank - Fan/Auger - PRESSURE	3
46	N34577	Tag - Hose ID - Air Tank - Fan/Auger - RETURN	3
47	N34578	Tag - Hose ID - Air Tank - Fan/Auger - CASE DRAIN	3
48	N21690	Mount Bracket	1
49	N21691	Mount Bracket - 4	1
49A	N27589	Mount Bracket - 6	1
50	N16608	Pioneer Coupler Clamp	4
51	N13901	Bushing - 3/8 ID x 5/8 OD x 3/8 Lg	2
52	N19458	Spacer - 3/8 ID x 9/16 OD x 2 Lg	4
53	C-3918	Hex Bolt - 3/8 x 5 Lg	1
54	**S-1303**	**Hex Bolt - 5/16 x 2 Lg - Cart Selector Valve Mount**	**2**
55	S13337	Hex Bolt - 5/16 x 6 Lg	2

Not Valid for Import 2014 -

Hydraulic - 9365, 9450, 9535 Tow Behind Hydraulic - Fan VRT

Item	Part No.	Description	Qty
56	W-469	Hex Bolt - 1/4 x 3/4 Lg	4
57	W-521	Lockwasher - 1/4	4
58	**W-522**	**Lockwasher - 5/16 (Cart - 2) (VR - 2)**	**6**
59	W-523	Lockwasher - 3/8	1
60	W-512	Hex Nut - 1/4	4
61	**W-513**	**Hex Nut - 5/16 (Cart - 2) (VR - 2)**	**6**
62	W-514	Hex Nut - 3/8	1
63	N37036	Hyd Hose - 3/4 x 396 Lg w/1 1/16-12 MORB	2
63A	N37035	Hyd Hose - 3/4 x 348 Lg w/1 1/16-12 MORB	2
63B	N44955	Hyd Hose - 3/4 x 456 Lg w/1 1/16-12 MORB (5-Frame Contour Air Drill)	2
64	N36045	Hyd Hose - 3/8 x 396 Lg w/7/8-14 MORB	1
64A	N36043	Hyd Hose - 3/8 x 348 Lg w/7/8-14 MORB	1
64B	N44956	Hyd Hose - 3/8 x 456 Lg w/7/8-14 MORB (5-Frame Contour Air Drill)	1
65	D-4838	Tie Strap - 14 1/2 Lg	16
65A	D-4951	Tie Strap - 7 3/8 Lg	9
Auger System			
66	C-4468	Auger - Hyd Hose - 1/2 x 24 Lg w/7/8-14 FJIC	1
67	C26259	Auger - Hyd Hose - 1/2 x 108 Lg w/7/8-14 FJIC	1
68	K-5806	Auger - 90 Elbow - Swivel - 7/8-14 MJIC x 7/8-14 FJIC	3
69	N47903	Auger - Connector - 7/8-14 MJIC x 1 1/16-12 MORB	2
70	N51275	Auger - Valve Block	1
VR System			
71	N45195	Manifold Assembly - 4 Bank (See page 18-23)	1
72	N37845	Ball Valve (Handle - N66053)	1
73	N37847	Plate	1
74	**W-471**	**Hex Bolt - 5/16 x 1 Lg**	**2**
75	N37846	U-Bolt - 1/4 x 2 x 3	2
76	D-5277	Serrrated Locknut - 1/4	4
77	C-4387	Hyd Hose - 1/2 x 36 Lg w/7/8-14 MJIC x 7/8-14 FJIC	1
78	K-5685	Hyd Hose - 1/2 x 48 Lg w/7/8-14 FJIC	1
79	N29363	**9365** - Hyd Hose - 3/8 x 60 Lg w/3/4-16 FJIC x 9/16-18FJIC w/90 Bend	2
	N29362	**9450 & 9535 -** Hyd Hose - 3/8 x 48 Lg w/3/4-16 FJIC x 9/16-18FJIC w/90 Bend	2
80	N29364	**ALL** - Hyd Hose - 3/8 x 72 Lg w/3/4-16 FJIC x 9/16-18 FJIC w/90 Bend	2
81	N37421	**9450 & 9535** Hyd Hose - 3/8 x 108 Lg w/3/4-16 FJIC x 9/16-18 FJIC w/90 Bend	2
82	N45192	**9535** Hyd Hose - 3/8 x 120 Lg w/3/4-16 FJIC x 9/16-18 FJIC w/90 Bend	2
83	N29356	Tee - Swivel - (1) - 1 1/16 FJIC x (2) - 1 1/16 MJIC	1
84	N37849	Connector - 1 1/16 FJIC x 1 1/16-12 MORB	1
85	N51990	45 Elbow - 3/4-16 MJIC x 7/8-14 MORB	8
86	N29358	Connector - 9/16-18 MJIC x 9/16-18 MORB	8
87	N29365	Plug - 9/16-18 MORB	2
88	C15318	90 Elbow - 7/8-14 MJIC x 7/8-14 MORB	2
89	N15990	Connector - 1 1/16-12 MJIC x 1 1/16-12 MORB	1
90	**C-4368**	**Oil Line - 5/8 x 88 Lg w/ 7/8-14 FJIC**	**1**
91	**C-4385**	**Hyd Hose - 1/2 x 24 Lg w/7/8-14 MJIC x 7/8-14 FJIC**	**1**
92	**H18746**	**Tee - Swivel - (1) - 7/8-14 FJIC x (2) - 7/8-14 MJIC**	**1**
93	C-4469	Connector - 7/8-14 MJIC	1
94	N19337	Connector - 7/8-14 MJIC x 1 1/16-12 FJIC	1
95	N29319	Hydraulic Motor - DANFOSS	1
	N48071	Seal Kit for DANFOSS DH80 series 1 motor	
	N42365	Seal Kit for WHITE RS series motor	
	N19023	Decal - Danger “HOT” (Not Shown)	1
	N36263	Decal - Warning “BURN HAZARD” (Not Shown)	1
	N36443	Decal - Auger “LEVER POSITION” (Not Shown)	1
	N36453	Decal - “AUGER / FAN” (Not Shown)	1
	N49783	Decal - “FAN / CALIBRATION”	1

- Valid to March 2014 -

Hydraulic
9445, 9550, 9650 Tow Behind - Fan VRT

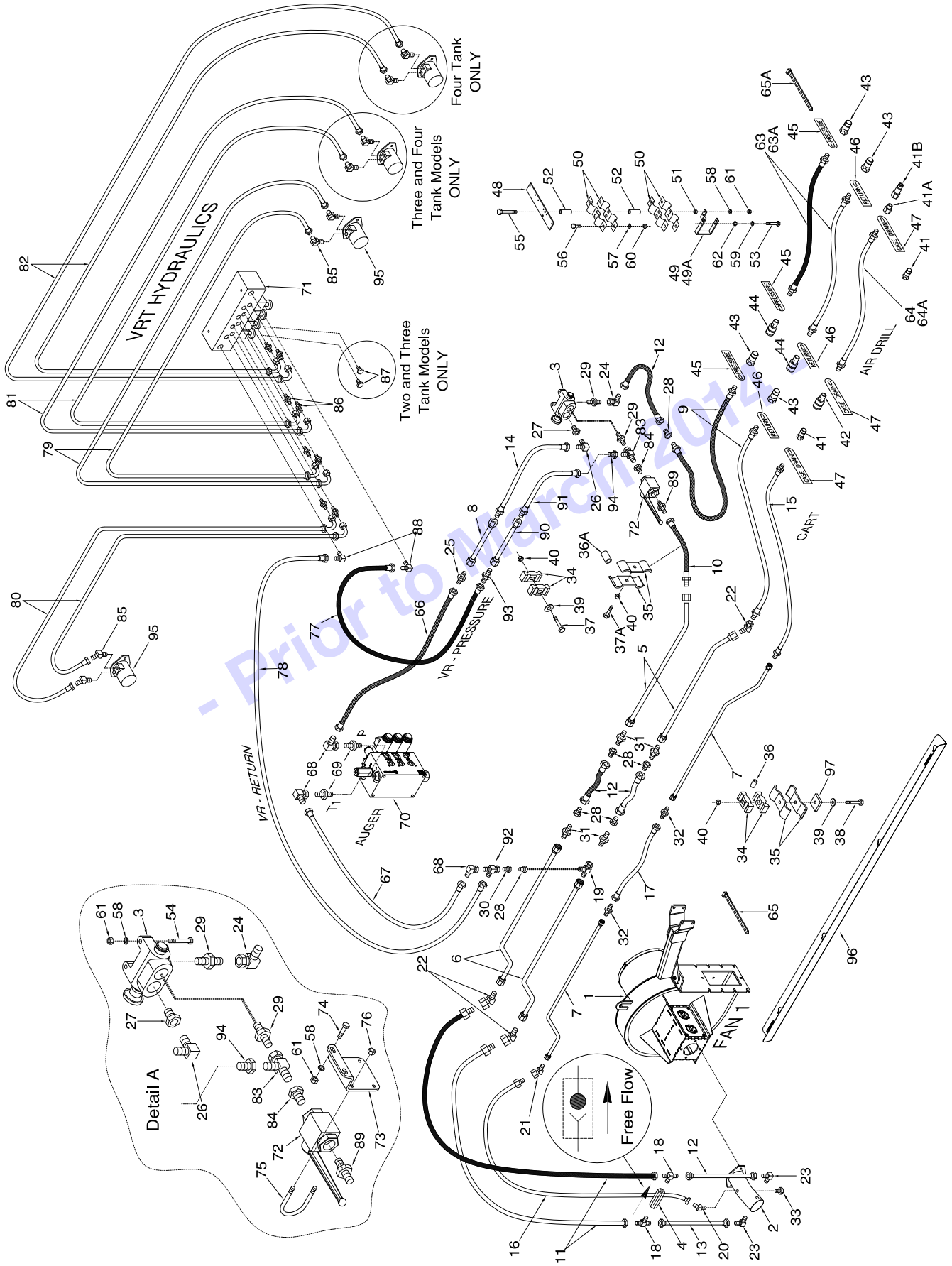

Hydraulic - 9445, 9550, 9650 Tow Behind - Fan VRT

Item	Part No.	Description	Qty
Cart System			
1	* * * * *	Fan - See Section 11	1
2	* * * * *	Hydraulic Motor - Rexroth - See Section 11	1
3	N34506	Selector Valve w/1 1/16-12 FORB - (N31603 - Seal Kit) (C26358 - Knob)	1
4	N16399	Check Valve - 7PSI - 1 1/16-12 ORB	1
5	N27601	Oil Line - 1 x 108 Lg w/45 Bend w/1 1/16-12 FJIC	2
6	N36833	Oil Line - 1 x 94 Lg w / 6 Offset Bend x 1 5/16-12 FJIC	2
7	N36444	Oil Line - 1/2 x 94 Lg w / 6 Offset Bend x 3/4-16 FJIC	2
8	C-4370	Oil Line - 5/8 x 128 Lg w/ 7/8-14 FJIC	1
9	N37037	Hyd Hose - 3/4 x 270 Lg w/1 5/16-12 MJIC x 1 1/16-12 MORB	2
10	N55197	Hyd Hose - 3/4 x 57 Lg w/1 5/16-12 MJIC x 1 1/16-12 FJIC	1
11	N19434	Hyd Hose - 3/4 x 35 Lg w/1 5/16-12 MJIC x 1 1/16-12 FJIC	2
12	N15991	Hyd Hose - 3/4 x 12 Lg w/1 1/16-12 FJIC	4
13	N37900	Hyd Hose - 3/4 x 18 Lg w/1 1/16-12 FJIC	1
14	**C-4385**	**Hyd Hose - 1/2 x 24 Lg w/7/8-14 MJIC x 7/8-14 FJIC**	**1**
15	N37180	Hyd Hose - 3/8 x 270 Lg w/3/4-16 MJIC x 7/8-14 MORB	1
16	N19475	Hyd Hose - 3/8 x 48 Lg w/9/16-18 FJIC x 3/4-16 MJIC	1
17	D10821	Hyd Hose - 3/8 x 38 Lg w/3/4-16 FJIC	1
18	N16388	Tee - (2) 1 1/16-12 MJIC x (1) 1 1/16-12 MORB	2
19	N19336	Tee - Swivel - (1) 1 5/16-12 FJIC x (2) 1 5/16-12 MJIC	1
20	N19578	45 Elbow - 9/16-18 MJIC x 9/16-18 MORB	1
21	N36380	45 Elbow - Swivel - 3/4-16 FJIC x 3/4-16 MJIC	1
22	N36382	45 Elbow - Swivel - 1 5/16-12 FJIC x 1 5/16-12 MJIC	3
23	N16359	90 Elbow - 1 1/16-12 MJIC x 1 1/16-12 MORB	2
24	N21189	90 Elbow - Swivel - 1 1/16-12 FJIC x 1 1/16-12 MJIC	1
25	**C-4469**	**Connector - 7/8-14 MJIC.**	**1**
26	C15318	90 Elbow - 7/8-14 MJIC x 7/8-14 MORB	1
27	N34499	Connector - 1 1/16-12 MORB x 7/8-14 FORB	1
28	N19338	Connector - 1 1/16-12 MJIC x 1 5/16-12 FJIC	5
29	N15990	Connector 1 1/16-12 MJIC x 1 1/16-12 MORB	2
30	N19337	Connector - 7/8-14 MJIC x 1 1/16-12 FJIC	1
31	N16346	Connector - 1 5/16-12 MJIC	4
32	N25754	Connector - 3/4-16 MJIC	2
33	N16621	Plug - 9/16-18 MORB	1
34	C-4698	Nylon Oil Line Clamp	**14**
35	D-4808	Oil Line Clamp	10
36	N21632	Oil Line Spacer - 3/8 ID x 9/16 OD x 3/4 Lg	4
36A	D-5011	Oil Line Spacer - .625 ID x 1 OD x 1.562 Lg	1
37	W-479	Hex Bolt - 3/8 x 2 1/4 Lg	**3**
37A	W-477	Hex Bolt - 3/8 x 1 1/2 Lg	1
38	C-1550	Hex Bolt - 3/8 x 4 Lg	4
39	W-538	Flatwasher - 3/8	**7**
40	M-3388	Locknut - 3/8	**8**
41	**N34498**	**1/2 Male Pioneer Tip - 7/8-14 FORB (Cart - 1)**	**2**
41A	K50961	Connector - 3/4-16 MORB x 7/8-14 FORB	1
41B	K50834	3/8 Flat Face Tip - 3/4-16 FORB	1
42	N34488	1/2 Female Pioneer Coupler - 7/8-14 FORB	1
43	**N37914**	**3/4 Male Pioneer Tip - 1 1/16-12 FORB (Cart - 2)**	**4**
	N69669	Kit-Hydraulic Tip Adapter -1/2 Male Pioneer (See Page 14-63 for details)	
44	N37915	3/4 Female Pioneer Coupler - 1 1/16-12 FORB	2
45	N34576	Tag - Hose ID - Air Tank - Fan/Auger - PRESSURE	3
46	N34577	Tag - Hose ID - Air Tank - Fan/Auger - RETURN	3
47	N34578	Tag - Hose ID - Air Tank - Fan/Auger - CASE DRAIN	3
48	N21690	Mount Bracket	1
49	N21691	Mount Bracket - 4	1
49A	N27589	Mount Bracket - 6	1
50	N16608	Pioneer Coupler Clamp	4
51	N13901	Bushing - 3/8 ID x 5/8 OD x 3/8 Lg	2
52	N19458	Spacer - 3/8 ID x 9/16 OD x 2 Lg	4
53	C-3918	Hex Bolt - 3/8 x 5 Lg	1
54	**S-1303**	**Hex Bolt - 5/16 x 2 Lg - Cart Selector Valve Mount**	**2**
55	S13337	Hex Bolt - 5/16 x 6 Lg	2

- Discontinued 2014 -

Hydraulic - 9445, 9550, 9650 Tow Behind Hydraulic - Fan VRT

Item	Part No.	Description	Qty
56	W-469	Hex Bolt - 1/4 x 3/4 Lg	4
57	W-521	Lockwasher - 1/4	4
58	**W-522**	**Lockwasher - 5/16 (Cart - 2) (VR - 2)**	**6**
59	W-523	Lockwasher - 3/8	1
60	W-512	Hex Nut - 1/4	4
61	**W-513**	**Hex Nut - 5/16 (Cart - 2) (VR - 2)**	**6**
62	W-514	Hex Nut - 3/8	1
63	N37036	Hyd Hose - 3/4 x 396 Lg w/1 1/16-12 MORB	2
63A	N37035	Hyd Hose - 3/4 x 348 Lg w/1 1/16-12 MORB	2
63B	N44955	Hyd Hose - 3/4 x 456 Lg w/1 1/16-12 MORB (5-Frame Contour Air Drill)	2
64	N36045	Hyd Hose - 3/8 x 396 Lg w/7/8-14 MORB	1
64A	N36043	Hyd Hose - 3/8 x 348 Lg w/7/8-14 MORB	1
64B	N44956	Hyd Hose - 3/8 x 456 Lg w/7/8-14 MORB (5-Frame Contour Air Drill)	1
65	D-4838	Tie Strap - 14 1/2 Lg	16
65A	D-4951	Tie Strap - 7 3/8 Lg	9
Auger System			
66	C-4468	Auger - Hyd Hose - 1/2 x 24 Lg w/7/8-14 FJIC	1
67	C26259	Auger - Hyd Hose - 1/2 x 108 Lg w/7/8-14 FJIC	1
68	K-5806	Auger - 90 Elbow - Swivel - 7/8-14 MJIC x 7/8-14 FJIC	3
69	N47903	Auger - Connector - 7/8-14 MJIC x 1 1/16-12 MORB	2
70	N51275	Auger - Valve Block	1
VR System			
71	N45195	Manifold Assembly - 4 Bank (See page 18-23)	1
72	N37845	Ball Valve (Handle - N66053)	1
73	N37847	Plate	1
74	**W-471**	**Hex Bolt - 5/16 x 1 Lg**	**2**
75	N37846	U-Bolt - 1/4 x 2 x 3	2
76	D-5277	Serrrated Locknut - 1/4	4
77	C26344	Hyd Hose - 1/2 x 42 Lg w/7/8-14 FJIC	1
78	K-5685	Hyd Hose - 1/2 x 48 Lg w/7/8-14 FJIC	1
79	N29364	**9445** - Hyd Hose - 3/8 x 72 Lg w/3/4-16 FJIC x 9/16-18 FJIC w/90 Bend	2
	N29363	**9550 & 9650** - Hyd Hose - 3/8 x 60 Lg w/3/4-16 FJIC x 9/16-18FJIC w/90 Bend	2
80	N29364	**ALL** - Hyd Hose - 3/8 x 72 Lg w/3/4-16 FJIC x 9/16-18 FJIC w/90 Bend	2
81	N51952	**9550 & 9650** - Hyd Hose - 3/8 x 96 Lg w/3/4-16 FJIC x 9/16-18 FJIC w/90 Bend	2
82	N51951	**9650** - Hyd Hose - 3/8 x 144 Lg w/3/4-16 FJIC x 9/16-18 FJIC w/90 Bend	2
83	N29356	Tee - Swivel - (1) - 1 1/16 FJIC x (2) - 1 1/16 MJIC	1
84	N37849	Connector - 1 1/16 FJIC x 1 1/16-12 MORB	1
85	N51990	45 Elbow - 3/4-16 MJIC x 7/8-14 MORB	8
86	N29358	Connector - 9/16-18 MJIC x 9/16-18 MORB	8
87	N29365	Plug - 9/16-18 MORB	2
88	C15318	90 Elbow - 7/8-14 MJIC x 7/8-14 MORB	2
89	N15990	Connector - 1 1/16-12 MJIC x 1 1/16-12 MORB	1
90	C-4370	Oil Line - 5/8 x 128 Lg w/ 7/8-14 FJIC	1
91	**C-4385**	**Hyd Hose - 1/2 x 24 Lg w/7/8-14 MJIC x 7/8-14 FJIC**	**1**
92	**H18746**	**Tee - Swivel - (1) - 7/8-14 FJIC x (2) - 7/8-14 MJIC**	**1**
93	C-4469	Connector - 7/8-14 MJIC	1
94	N19337	Connector - 7/8-14 MJIC x 1 1/16-12 FJIC	1
95	N29319	Hydraulic Motor - DANFOSS	1
	N48071	Seal Kit for DANFOSS DH80 series 1 motor	
	N42365	Seal Kit for WHITE RS series motor	
96	N53086	Panel - Oil Line Cover - 2 1/4 tall - Single Fan	2
	N53009	Panel - Oil Line Cover - 3 3/4 tall - Dual Fan	2
97	S31476	Plate Spacer - 1/2	4
	N19023	Decal - Danger “HOT” (Not Shown)	1
	N36263	Decal - Warning “BURN HAZARD” (Not Shown)	1
	N36443	Decal - Auger “LEVER POSITION” (Not Shown)	1
	N36453	Decal - “AUGER / FAN” (Not Shown)	1
	N49783	Decal - “FAN / CALIBRATION”	1

Thru March 2014 -

- Prior to March 2014 -

Blank Page

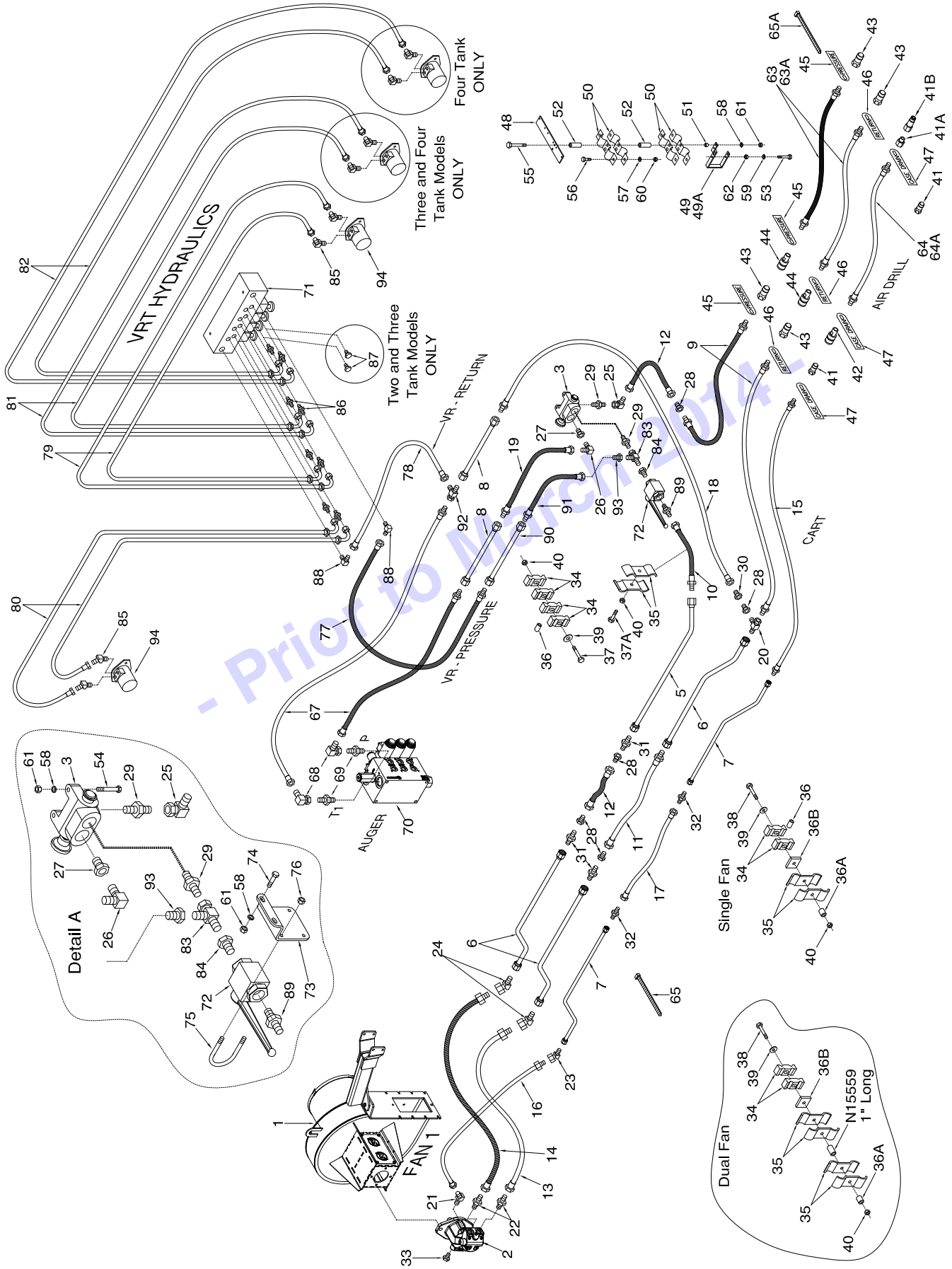
VRT HYDRAULICS
Four Tank ONLY
Three and Four Tank Models ONLY
Two and Three Tank Models ONLY
VR - RETURN
VR - PRESSURE
AUGER
CART
AIR DRILL
Detail A
Single Fan
Dual Fan
N15559 1" Long
FAN 1
- Prior to March2014 -

Hydraulic - 9800 Tow Behind - Fan VRT

Item	Part No.	Description	Qty
Cart System			
1	* * * * *	Fan - See Section 11	1
2	N53243	Hydraulic Motor W/ Internal Check Valve - Rexroth - See Section 11	1
3	N34506	Selector Valve w/1 1/16-12 FORB - (N31603 - Seal Kit) (C26358 - Knob)	1
4	* * * * *		
5	N27601	Oil Line - 1 x 108 Lg w/45 Bend w/1 1/16-12 FJIC	2
6	N36833	Oil Line - 1 x 94 Lg w / 6 Offset Bend x 1 5/16-12 FJIC	2
7	N36444	Oil Line - 1/2 x 94 Lg w / 6 Offset Bend x 3/4-16 FJIC	2
8	C-4370	Oil Line - 5/8 x 128 Lg w/ 7/8-14 FJIC	2
9	N37037	Hyd Hose - 3/4 x 270 Lg w/1 5/16-12 MJIC x 1 1/16-12 MORB	2
10	N55197	Hyd Hose - 3/4 x 57 Lg w/1 5/16-12 MJIC x 1 1/16-12 FJIC	1
11	N19434	Hyd Hose - 3/4 x 35 Lg w/1 5/16-12 MJIC x 1 1/16-12 FJIC	1
12	N15991	Hyd Hose - 3/4 x 12 Lg w/1 1/16-12 FJIC	2
13	N53493	Hyd Hose - 3/4 x 48 Lg w/1 5/16-12 MJIC x 7/8-14 FJIC	1
14	N53495	Hyd Hose - 3/4 x 54 Lg w/1 5/16-12 MJIC x 7/8-14 FJIC	1
15	N37180	Hyd Hose - 3/8 x 270 Lg w/3/4-16 MJIC x 7/8-14 MORB	1
16	N19475	Hyd Hose - 3/8 x 48 Lg w/9/16-18 FJIC x 3/4-16 MJIC	1
17	D10821	Hyd Hose - 3/8 x 38 Lg w/3/4-16 FJIC	1
18	**C18779**	**Hyd Hose - 1/2 x 72 Lg w/7/8-14 MJIC x 7/8-14 FJIC**	**1**
19	**C-4385**	**Hyd Hose - 1/2 x 24 Lg w/7/8-14 MJIC x 7/8-14 FJIC**	**1**
20	N19336	Tee - Swivel - (1) 1 5/16-12 FJIC x (2) 1 5/16-12 MJIC	1
21	N19578	45 Elbow - 9/16-18 MJIC x 9/16-18 MORB	1
22	N34505	Connector - 7/8-14 (#10) MJIC x 7/8-14 (#10) MORB	2
23	N36380	45 Elbow - Swivel - 3/4-16 FJIC x 3/4-16 MJIC	1
24	N36382	45 Elbow - Swivel - 1 5/16-12 FJIC x 1 5/16-12 MJIC	2
25	N21189	90 Elbow - Swivel - 1 1/16-12 FJIC x 1 1/16-12 MJIC	1
26	C15318	90 Elbow - 7/8-14 MJIC x 7/8-14 MORB	1
27	N34499	Connector - 1 1/16-12 MORB x 7/8-14 FORB	1
28	N19338	Connector - 1 1/16-12 MJIC x 1 5/16-12 FJIC	5
29	N15990	Connector 1 1/16-12 MJIC x 1 1/16-12 MORB	2
30	N19337	Connector - 7/8-14 MJIC x 1 1/16-12 FJIC	1
31	N16346	Connector - 1 5/16-12 MJIC	4
32	N25754	Connector - 3/4-16 MJIC	2
33	N16621	Plug - 9/16-18 MORB	1
34	C-4698	Nylon Oil Line Clamp	**14**
35	D-4808	Oil Line Clamp	10
36	N21632	Oil Line Spacer - 3/8 ID x 9/16 OD x 3/4 Lg	4
36A	N16257	Oil Line Spacer - 3/8 ID x 5/8 OD x 5/8 Lg	4
36B	S31476	Plate Spacer - 1/2	4
37	C-1550	Hex Bolt - 3/8 x 4 Lg	**3**
37A	W-477	Hex Bolt - 3/8 x 1 1/2 Lg	1
38	C-1550	Hex Bolt - 3/8 x 4 Lg	4
39	W-538	Flatwasher - 3/8	**7**
40	M-3388	Locknut - 3/8	**8**
41	**N34498**	**1/2 Male Pioneer Tip - 7/8-14 FORB (Cart - 1)**	**2**
41A	K50961	Connector - 3/4-16 MORB x 7/8-14 FORB	1
41B	K50834	3/8 Flat Face Tip - 3/4-16 FORB	1
42	N34488	1/2 Female Pioneer Coupler - 7/8-14 FORB	1
43	**N37914**	**3/4 Male Pioneer Tip - 1 1/16-12 FORB (Cart - 2)**	**4**
	N69669	Kit-Hydraulic Tip Adapter -1/2 Male Pioneer (See Page 14-63 for details)	
44	N37915	3/4 Female Pioneer Coupler - 1 1/16-12 FORB	2
45	N34576	Tag - Hose ID - Air Tank - Fan/Auger - PRESSURE	3
46	N34577	Tag - Hose ID - Air Tank - Fan/Auger - RETURN	3
47	N34578	Tag - Hose ID - Air Tank - Fan/Auger - CASE DRAIN	3
48	N21690	Mount Bracket	1
49	N21691	Mount Bracket - 4	1
49A	N27589	Mount Bracket - 6	1
50	N16608	Pioneer Coupler Clamp	4
51	N13901	Bushing - 3/8 ID x 5/8 OD x 3/8 Lg	2

- Printed in USA 2014 -

Hydraulic - 9800 Tow Behind Hydraulic - Fan VRT

Item	Part No.	Description	Qty
52	N19458	Spacer - 3/8 ID x 9/16 OD x 2 Lg	4
53	C-3918	Hex Bolt - 3/8 x 5 Lg	1
54	**S-1303**	**Hex Bolt - 5/16 x 2 Lg - Cart Selector Valve Mount**	**2**
55	S13337	Hex Bolt - 5/16 x 6 Lg	2
56	W-469	Hex Bolt - 1/4 x 3/4 Lg	4
57	W-521	Lockwasher - 1/4	4
58	**W-522**	**Lockwasher - 5/16 (Cart - 2) (VR - 2)**	**6**
59	W-523	Lockwasher - 3/8	1
60	W-512	Hex Nut - 1/4	4
61	**W-513**	**Hex Nut - 5/16 (Cart - 2) (VR - 2)**	**6**
62	W-514	Hex Nut - 3/8	1
63	N37036	Hyd Hose - 3/4 x 396 Lg w/1 1/16-12 MORB	2
63A	N37035	Hyd Hose - 3/4 x 348 Lg w/1 1/16-12 MORB	2
63B	N44955	Hyd Hose - 3/4 x 456 Lg w/1 1/16-12 MORB (5-Frame Contour Air Drill)	2
64	N36045	Hyd Hose - 3/8 x 396 Lg w/7/8-14 MORB	1
64A	N36043	Hyd Hose - 3/8 x 348 Lg w/7/8-14 MORB	1
64B	N44956	Hyd Hose - 3/8 x 456 Lg w/7/8-14 MORB (5-Frame Contour Air Drill)	1
65	D-4838	Tie Strap - 14 1/2 Lg	16
65A	D-4951	Tie Strap - 7 3/8 Lg	9
Auger System			
67	C-4387	Auger - Hyd Hose - 1/2 x 36 Lg w/7/8-14 MJIC x 7/8-14 FJIC	2
68	K-5806	Auger - 90 Elbow - Swivel - 7/8-14 MJIC x 7/8-14 FJIC	3
69	N47903	Auger - Connector - 7/8-14 MJIC x 1 1/16-12 MORB	2
70	N51275	Auger - Valve Block	1
VR System			
71	N45195	Manifold Assembly - 4 Bank (See page 18-23)	1
72	N37845	Ball Valve (Handle - N66053)	1
73	N37847	Plate	1
74	**W-471**	**Hex Bolt - 5/16 x 1 Lg**	**2**
75	N37846	U-Bolt - 1/4 x 2 x 3	2
76	D-5277	Serrrated Locknut - 1/4	4
77	C-4387	Auger - Hyd Hose - 1/2 x 36 Lg w/7/8-14 MJIC x 7/8-14 FJIC	1
78	K-5685	Hyd Hose - 1/2 x 48 Lg w/7/8-14 FJIC	1
79	N29364	Hyd Hose - 3/8 x 72 Lg w/3/4-16 FJIC x 9/16-18 FJIC w/90 Bend	2
80	N50079	Hyd Hose - 3/8 x 84 Lg w/3/4-16 FJIC x 9/16-18 FJIC w/90 Bend	2
81	N45192	Hyd Hose - 3/8 x 120 Lg w/3/4-16 FJIC x 9/16-18 FJIC w/90 Bend	2
82	N53344	Hyd Hose - 3/8 x 168 Lg w/3/4-16 FJIC x 9/16-18 FJIC w/90 Bend	2
83	N29356	Tee - Swivel - (1) - 1 1/16 FJIC x (2) - 1 1/16 MJIC	1
84	N37849	Connector - 1 1/16 FJIC x 1 1/16-12 MORB	1
85	N51990	45 Elbow - 3/4-16 MJIC x 7/8-14 MORB	8
86	N29358	Connector - 9/16-18 MJIC x 9/16-18 MORB	8
87	N29365	Plug - 9/16-18 MORB	2
88	C15318	90 Elbow - 7/8-14 MJIC x 7/8-14 MORB	2
89	N15990	Connector - 1 1/16-12 MJIC x 1 1/16-12 MORB	1
90	C-4370	Oil Line - 5/8 x 128 Lg w/ 7/8-14 FJIC	1
91	**C-4385**	**Hyd Hose - 1/2 x 24 Lg w/7/8-14 MJIC x 7/8-14 FJIC**	**1**
92	**H18746**	**Tee - Swivel - (1) - 7/8-14 FJIC x (2) - 7/8-14 MJIC**	**1**
93	N19337	Connector - 7/8-14 MJIC x 1 1/16-12 FJIC	1
94	N29319	Hydraulic Motor - DANFOSS	4
	N48071	Seal Kit for DANFOSS DH80 series 1 motor	
	N42365	Seal Kit for WHITE RS series motor	
	N19023	Decal - Danger “HOT” (Not Shown)	1
	N36263	Decal - Warning “BURN HAZARD” (Not Shown)	1
	N36443	Decal - Auger “LEVER POSITION” (Not Shown)	1
	N36453	Decal - “AUGER / FAN” (Not Shown)	1
	N49783	Decal - “FAN / CALIBRATION”	1

- Prior to March 2014 -

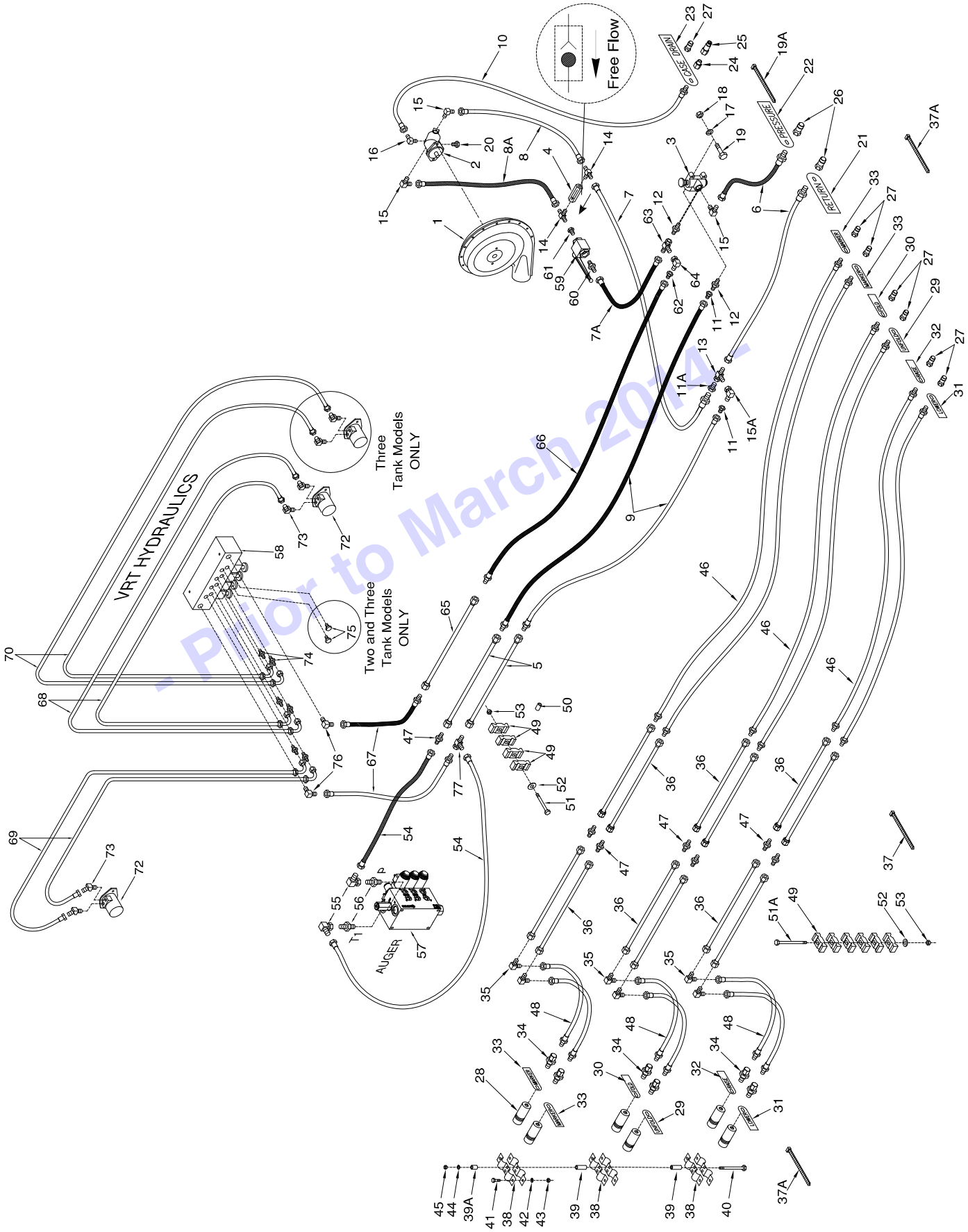
Free Flow
CASE DRAIN
PRESSURE
RETURN
VRT HYDRAULICS
Three Tank Models ONLY
Two and Three Tank Models ONLY
AUGER
- Prior to March 2014 -

9365, 9450 Tow Between Hydraulic Drive - Fan VRT

Item	Part No.	Description	Qty
1	* * * * *	Fan - See Section 11	1
2	* * * * *	Hydraulic Motor - Rexroth - See Section 11	1
3	N37514	Selector Valve (Seal Kit # N31603) (Knob # C26358)	1
4	N16399	Check Valve - 7PSI - 1 1/16-12 ORB	1
5	**C-4368**	**Oil Line - 5/8 x 88 Lg w/ 7/8-14 FJIC**	**2**
6	N37038	Hyd Hose - 3/4 x 84 Lg w/ 1 1/16-12 MORB x 1 1/16-12 FJIC	2
7	N50900	Hyd Hose - 3/4 x 52 Lg w/1 5/16-12 MJIC x 1 1/16-12 FJIC	1
7A	N25644	Hyd Hose - 3/4 x 35 Lg w/1 1/16-12 FJIC	1
8	**N15991**	**Hyd Hose - 3/4 x 12 Lg w/1 1/16-12 FJIC**	**1**
8A	N37900	Hyd Hose - 3/4 x 18 Lg w/1 1/16-12 FJIC	1
9	**N55169**	**Hyd Hose - 1/2 x 108 Lg w/7/8-14 MJIC x 7/8-14 FJIC**	2
10	N37404	Hyd Hose - 3/8 x 152 w/ 7/8-14 MORB X 9/16-18 FJIC	1
11	N19337	Connector - 7/8-14 MJIC x 1 1/16-12 FJIC	2
11A	N19338	Connector - 1 5/16 (#16) FJIC x 1 1/16 (#12) MJIC	1
12	N15990	Connector - 1 1/16-12 MJIC x 1 1/16-12 MORB	2
13	N29356	Tee - Swivel - (1) - 1 1/16 FJIC x (2) - 1 1/16 MJIC	1
14	N16388	Tee - (2) 1 1/16-12 MJIC x (1) 1 1/16-12 MORB	2
15	N16359	90 Elbow - 1 1/16-12 MJIC x 1 1/16-12 MORB	3
15A	N21189	90 Elbow - Swivel - 1 1/16-12 FJIC x 1 1/16-12 MJIC	1
16	N19578	45 Elbow - 9/16-18 MJIC x 9/16-18 MORB	1
17	W-522	Lockwasher - 5/16	2
18	W-513	Hex Nut - 5/16	2
19	S-1303	Hex Bolt - 5/16 x 2 Lg	2
20	N16621	Plug - 9/16-18 MORB	1
21	N34577	Tag - Hose ID Tank - Fan/Auger - RETURN	1
22	N34576	Tag - Hose ID - Tank - Fan/Auger - PRESSURE	1
23	N34578	Tag - Hose ID - Tank - Fan/Auger - CASE DRAIN	1
24	K50961	Connector - 3/4-16 MORB x 7/8-14 FORB	1
25	K50834	3/8 Flat Face Tip - 3/4-16 FORB	1
26	N37914	3/4 Male Pioneer Tip - 1 1/16-12 FORB	2
	N69669	Kit-Hydraulic Tip Adapter -1/2 Male Pioneer (See Page 14-63 for details)	
27	N34498	1/2 Male Pioneer Tip - 7/8-14 FORB	7
28	N34488	1/2 Female Pioneer Coupler - 7/8-14 FORB	6
29	S37662	Tag - Hose ID - Wing Lift - UNFOLD	2
30	S37661	Tag - Hose ID - Wing Lift - FOLD	2
31	S37663	Tag - Hose ID - Depth Control - LOWER	2
32	S37664	Tag - Hose ID - Depth Control - RAISE	2
33	N37657	Tag - Hose ID - WHEEL MARKER	4
34	N34620	Connector - 7/8-14 FJIC x 7/8-14 MORB	6
35	H24393	90 Elbow - 7/8-14 MJIC	7
36	N37348	Oil Line - 5/8 x 84 Lg w/ 7/8-14 FJIC	12
37	D-4838	Tie Strap - 14 1/2 Lg	15
37A	D-4951	Tie Strap - 7 3/8 Lg	15
37B	S13336	Tie Strap - 24 Lg	3
38	N16608	Coupler Clamp - Female Pioneer	6
39	N19458	Spacer Bushing - 0.540 OD x 2	6
39A	N19155	Spacer Bushing - 0.540 OD x 1/2	2
40	S13337	Hex Bolt - 5/16 x 6 Lg	2
41	W-469	Hex Bolt - 1/4 x 3/4 Lg	6
42	W-521	Lockwasher - 1/4	6
43	W-512	Hex Nut - 1/4	6
44	W-522	Lockwasher - 5/16	2
45	W-513	Hex Nut - 5/16	2
46	N37403	Hyd Hose - 1/2 x 192 Lg - 7/8-14 MJIC x 7/8-14 MORB	6
47	**C-4469**	**Connector - 7/8-14 MJIC.**	**6**
48	C-4387	Hyd Hose - 1/2 x 36 Lg w/7/8-14 MJIC x 7/8-14 FJIC Swivel	6
49	C-4698	Nylon Oil Line Clamp **(VRT-4) (STD-4) (Tillage-24)**	**32**
50	N16257	Oil Line Spacer - 3/8 ID x 5/8 OD x 5/8 Lg **(VRT)**	**2**
51	C-1550	Hex Bolt - 3/8 x 4 Lg **(VRT) (Standard would use 2 1/4 Lg Bolt)**	**2**
51A	C-3664	Hex Bolt - 3/8 x 5 1/2 Lg	4

- Prior to March 2014 -

9365, 9450 Tow Between Hydraulic Drive - Fan VRT

Item	Part No.	Description	Qty
52	W-538	Flatwasher - 3/8	**6**
53	M-3388	Locknut - 3/8	**6**
Auger System			
54	C-4468	Auger - Hyd Hose - 1/2 x 24 Lg w/7/8-14 FJIC	2
55	K-5806	Auger - 90 Elbow - Swivel - 7/8-14 MJIC x 7/8-14 FJIC	2
56	N47903	Auger - Connector - 7/8-14 MJIC x 1 1/16-12 MORB	2
57	N51275	Auger - Valve Block	1
VRT System			
58	N45195	Manifold Assembly - 4 Valve Bank (See Page 18-23 for Details)	1
59	N37845	Ball Valve (Handle - N66053)	1
60	N15990	Connector - 1 1/16-12 MJIC x 1 1/16-12 MORB	1
61	N37849	Connector - 1 1/16-12 FJIC x 1 1/16-12 MORB	1
62	N19337	Connector - 7/8-14 MJIC x 1 1/16-12 FJIC	1
63	N29356	Swivel Tee - (1) - 1 1/16-12 FJIC x (2) - 1 1/16-12 MJIC	1
64	N21189	90 Elbow - Swivel - 1 1/16-12 FJIC x 1 1/16-12 MJIC	1
65	**C-4368**	**Oil Line - 5/8 x 88 Lg w/ 7/8-14 FJIC**	**1**
66	**N55169**	**Hyd Hose - 1/2 x 108 Lg w/7/8-14 MJIC x 7/8-14 FJIC**	1
67	C-4387	Hyd Hose - 1/2 x 36 Lg w/7/8-14 MJIC x 7/8-14 FJIC	2
68	N29363	**9365** - Hyd Hose - 3/8 x 60 Lg w/3/4-16 FJIC x 9/16-18FJIC w/90 Bend	2
	N29362	**9450 -** Hyd Hose - 3/8 x 48 Lg w/3/4-16 FJIC x 9/16-18FJIC w/90 Bend	2
69	N29364	**ALL** - Hyd Hose - 3/8 x 72 Lg w/3/4-16 FJIC x 9/16-18 FJIC w/90 Bend	2
70	N37421	**9450** Hyd Hose - 3/8 x 108 Lg w/3/4-16 FJIC x 9/16-18 FJIC w/90 Bend	2
72	N29319	Hydraulic Motor - DANFOSS	3
	N48071	Seal Kit for DANFOSS DH80 series 1 motor	
	N42365	Seal Kit for WHITE RS series motor	
73	N51990	45 Elbow - 3/4-16 MJIC x 7/8-14 MORB	8
74	N29358	Connector - 9/16-18 MJIC x 9/16-18 MORB	8
75	N29365	Plug - 9/16-18 MORB	2
76	C15318	90 Elbow - 7/8-14 MJIC x 7/8-14 MORB	2
77	H18746	Tee - Swivel - (2) 7/8-14 MJIC x (1) 7/8-14 FJIC (MMF)	1
	N19023	Decal - Danger "HOT" (Not Shown)	1
	N36263	Decal - Warning "BURN HAZARD" (Not Shown)	1
	N36443	Decal - Auger "LEVER POSITION" (Not Shown)	1
	N19031	Decal - "AUGER / FAN" (Not Shown)	1
	N49783	Decal - "CALIBRAITON / FAN" (Not Shown)	1

- Prior to March 2014 -

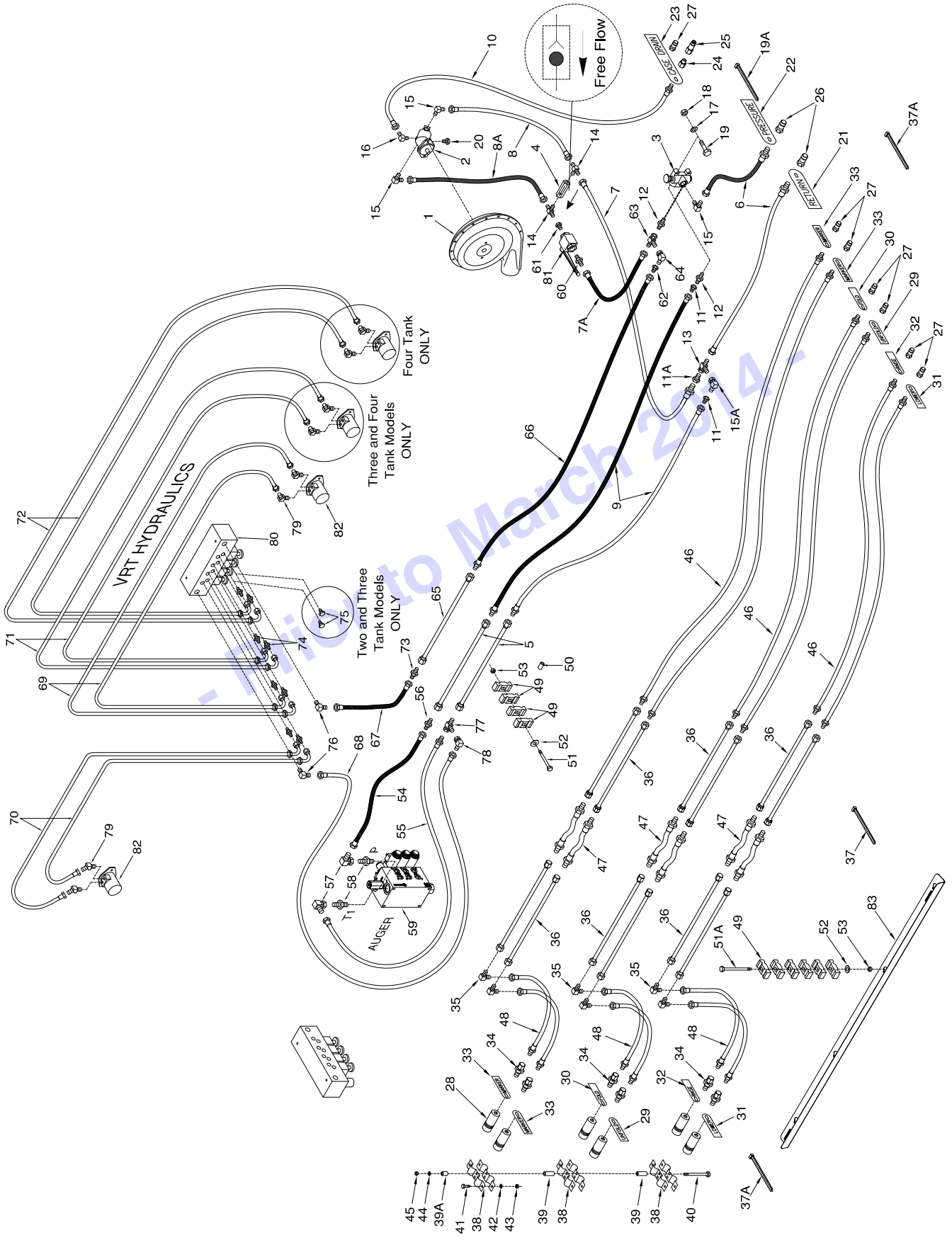

- Thru to March 2014 -

9445, 9550, 9650 Tow Between Hydraulic Drive - Fan VRT

Item	Part No.	Description	Qty
1	* * * * *	Fan - See Section 11	1
2	* * * * *	Hydraulic Motor - Rexroth - See Section 11	1
3	N37514	Selector Valve (Seal Kit # N31603) (Knob # C26358)	1
4	N16399	Check Valve - 7PSI - 1 1/16-12 ORB	1
5	C-4370	Oil Line - 5/8 x 128 Lg w/ 7/8-14 FJIC	2
6	N37038	Hyd Hose - 3/4 x 84 Lg w/ 1 1/16-12 MORB x 1 1/16-12 FJIC	2
7	N50900	Hyd Hose - 3/4 x 52 Lg w/1 5/16-12 MJIC x 1 1/16-12 FJIC	1
7A	N25644	Hyd Hose - 3/4 x 35 Lg w/1 1/16-12 FJIC	1
8	**N15991**	**Hyd Hose - 3/4 x 12 Lg w/1 1/16-12 FJIC**	**1**
8A	N37900	Hyd Hose - 3/4 x 18 Lg w/1 1/16-12 FJIC	1
9	F-5679	Hyd Hose - 1/2 x 96 Lg w/7/8-14 MJIC x 7/8-14 FJIC	2
10	N37404	Hyd Hose - 3/8 x 152 w/ 7/8-14 MORB X 9/16-18 FJIC	1
11	N19337	Connector - 7/8-14 MJIC x 1 1/16-12 FJIC	2
11A	N19338	Connector - 1 5/16 (#16) FJIC x 1 1/16 (#12) MJIC	1
12	N15990	Connector - 1 1/16-12 MJIC x 1 1/16-12 MORB	2
13	N29356	Tee - Swivel - (1) - 1 1/16 FJIC x (2) - 1 1/16 MJIC	1
14	N16388	Tee - (2) 1 1/16-12 MJIC x (1) 1 1/16-12 MORB	2
15	N16359	90 Elbow - 1 1/16-12 MJIC x 1 1/16-12 MORB	3
15A	N21189	90 Elbow - Swivel - 1 1/16-12 FJIC x 1 1/16-12 MJIC	1
16	N19578	45 Elbow - 9/16-18 MJIC x 9/16-18 MORB	1
17	W-522	Lockwasher - 5/16	2
18	W-513	Hex Nut - 5/16	2
19	S-1303	Hex Bolt - 5/16 x 2 Lg	2
20	N16621	Plug - 9/16-18 MORB	1
21	N34577	Tag - Hose ID Tank - Fan/Auger - RETURN	1
22	N34576	Tag - Hose ID - Tank - Fan/Auger - PRESSURE	1
23	N34578	Tag - Hose ID - Tank - Fan/Auger - CASE DRAIN	1
24	K50961	Connector - 3/4-16 MORB x 7/8-14 FORB	1
25	K50834	3/8 Flat Face Tip - 3/4-16 FORB	1
26	N37914	3/4 Male Pioneer Tip - 1 1/16-12 FORB	2
	N69669	Kit-Hydraulic Tip Adapter -1/2 Male Pioneer (See Page 14-63 for details)	
27	N34498	1/2 Male Pioneer Tip - 7/8-14 FORB	7
28	N34488	1/2 Female Pioneer Coupler - 7/8-14 FORB	6
29	S37662	Tag - Hose ID - Wing Lift - UNFOLD	2
30	S37661	Tag - Hose ID - Wing Lift - FOLD	2
31	S37663	Tag - Hose ID - Depth Control - LOWER	2
32	S37664	Tag - Hose ID - Depth Control - RAISE	2
33	N37657	Tag - Hose ID - WHEEL MARKER	4
34	N34620	Connector - 7/8-14 FJIC x 7/8-14 MORB	6
35	H24393	90 Elbow - 7/8-14 MJIC	6
36	N37348	Oil Line - 5/8 x 84 Lg w/ 7/8-14 FJIC	12
37	D-4838	Tie Strap - 14 1/2 Lg	15
37A	D-4951	Tie Strap - 7 3/8 Lg	15
37B	S13336	Tie Strap - 24 Lg	3
38	N16608	Coupler Clamp - Female Pioneer	6
39	N19458	Spacer Bushing - 0.540 OD x 2	6
39A	N19155	Spacer Bushing - 0.540 OD x 1/2	2
40	S13337	Hex Bolt - 5/16 x 6 Lg	2
41	W-469	Hex Bolt - 1/4 x 3/4 Lg	6
42	W-521	Lockwasher - 1/4	6
43	W-512	Hex Nut - 1/4	6
44	W-522	Lockwasher - 5/16	2
45	W-513	Hex Nut - 5/16	2
46	N37403	Hyd Hose - 1/2 x 192 Lg - 7/8-14 MJIC x 7/8-14 MORB	6
47	C-4386	Hyd Hose - 1/2 x 36 Lg w/7/8-14 MJIC	6
48	C-4387	Hyd Hose - 1/2 x 36 Lg w/7/8-14 MJIC x 7/8-14 FJIC Swivel	6
49	C-4698	Nylon Oil Line Clamp **(VRT-4) (STD-4) (Tillage-24)**	**36**
50	N16257	Oil Line Spacer - 3/8 ID x 5/8 OD x 5/8 Lg **(VRT)**	**3**
51	C-1550	Hex Bolt - 3/8 x 4 Lg **(VRT) (Standard would use 2 1/4 Lg Bolt)**	**3**
51A	C-3664	Hex Bolt - 3/8 x 5 1/2 Lg	4

- Print - March 2014 -

9445, 9550, 9650 Tow Between Hydraulic Drive - Fan VRT

Item	Part No.	Description	Qty
52	W-538	Flatwasher - 3/8	**7**
53	M-3388	Locknut - 3/8	**7**
Auger System			
54	C26344	Auger - Hyd Hose - 1/2 x 42 Lg w/7/8-14 FJIC	1
55	C-4388	Auger - Hyd Hose - 1/2 x 48 Lg w/ 7/8-14 MJIC x 7/8-14 FJIC	1
56	C-4469	Connector - 7/8-14 MJIC	1
57	K-5806	Auger - 90 Elbow - Swivel - 7/8-14 MJIC x 7/8-14 FJIC	2
58	N47903	Auger - Connector - 7/8-14 MJIC x 1 1/16-12 MORB	2
59	N51275	Auger - Valve Block	1
VRT System			
60	N15990	Connector - 1 1/16-12 MJIC x 1 1/16-12 MORB	1
61	N37849	Connector - 1 1/16-12 FJIC x 1 1/16-12 MORB	1
62	N19337	Connector - 7/8-14 MJIC x 1 1/16-12 FJIC	1
63	N29356	Swivel Tee - (1) - 1 1/16-12 FJIC x (2) - 1 1/16-12 MJIC	1
64	N21189	90 Elbow - Swivel - 1 1/16-12 FJIC x 1 1/16-12 MJIC	1
65	C-4370	Oil Line - 5/8 x 128 Lg w/ 7/8-14 FJIC	1
66	F-5679	Hyd Hose - 1/2 x 96 Lg w/7/8-14 MJIC x 7/8-14 FJIC	1
67	C26344	Hyd Hose - 1/2 x 42 Lg w/7/8-14 FJIC	1
68	K-5685	Hyd Hose - 1/2 x 48 Lg w/7/8-14 FJIC	1
69	N29364	**9445** - Hyd Hose - 3/8 x 72 Lg w/3/4-16 FJIC x 9/16-18 FJIC w/90 Bend	2
	N29363	**9550 & 9650** - Hyd Hose - 3/8 x 60 Lg w/3/4-16 FJIC x 9/16-18FJIC w/90 Bend	2
70	N29364	**ALL** - Hyd Hose - 3/8 x 72 Lg w/3/4-16 FJIC x 9/16-18 FJIC w/90 Bend	2
71	N51952	**9550 & 9650** - Hyd Hose - 3/8 x 96 Lg w/3/4-16 FJIC x 9/16-18 FJIC w/90 Bend	2
72	N51951	**9650** - Hyd Hose - 3/8 x 144 Lg w/3/4-16 FJIC x 9/16-18 FJIC w/90 Bend	2
73	C-4469	Connector - 7/8-14 MJIC	1
74	N29358	Connector - 9/16-18 MJIC x 9/16-18 MORB	8
75	N29365	Plug - 9/16-18 MORB	2
76	C15318	90 Elbow - 7/8-14 MJIC x 7/8-14 MORB	2
77	H18746	Tee - Swivel - (2) 7/8-14 MJIC x (1) 7/8-14 FJIC (MMF)	1
78	K-5806	90 Elbow - Swivel - 7/8-14 MJIC x 7/8-14 FJIC	1
79	N51990	45 Elbow - 3/4-16 MJIC x 7/8-14 MORB	8
80	N45195	Manifold Assembly - 4 Valve Bank (See Page 18-23 for Details)	1
81	N37845	Ball Valve (Handle - N66053)	1
82	N29319	Hydraulic Motor - DANFOSS	4
	N48071	Seal Kit for DANFOSS DH80 series 1 motor	
	N42365	Seal Kit for WHITE RS series motor	
83	N53009	Panel - Oil Line Cover	2
	N19023	Decal - Danger “HOT” (Not Shown)	1
	N36263	Decal - Warning “BURN HAZARD” (Not Shown)	1
	N36443	Decal - Auger “LEVER POSITION” (Not Shown)	1
	N19031	Decal - “AUGER / FAN” (Not Shown)	1
	N49783	Decal - “CALIBRAITON / FAN” (Not Shown)	1

- Prior to March 2014 -

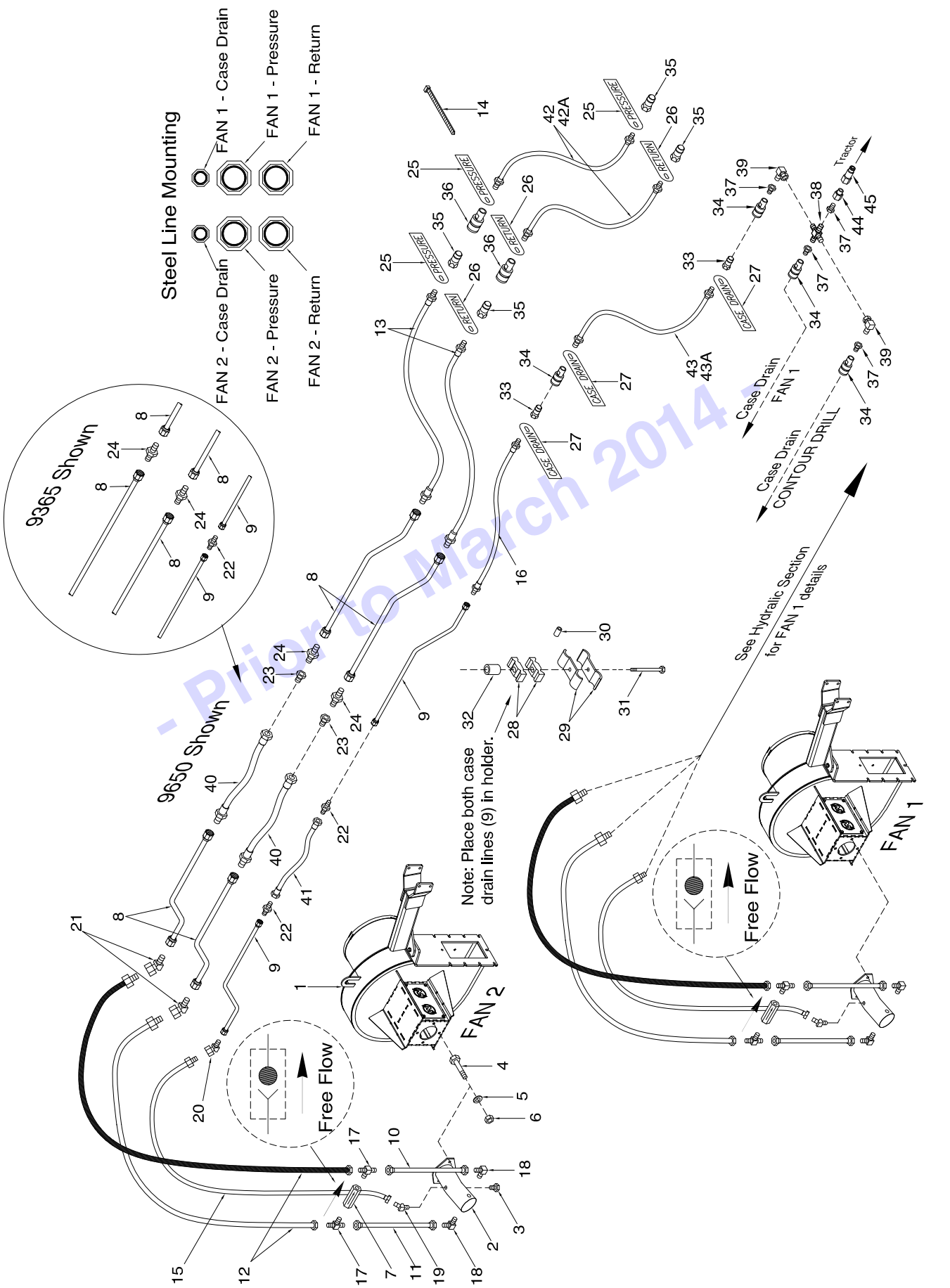

- Prior to March 2014 -

Dual Fan - Tow Behind

Item	Part No.	Description	Qty
1	N37826	Fan - See Section 11	1
2	N37742	Hydraulic Motor - 16cc - Rexroth - See Section 11	1
3	N16621	Plug - 9/16-18 MORB	1
4	S-1189	Hex Bolt - 1/2 x 1 3/4 Lg	2
5	W-525	Lockwasher - 1/2	6
6	W-516	Hex Nut - 1/2	6
7	N16399	Check Valve - 7 PSI - 1 1/16-12 ORB	1
8	N36833	Oil Line - 1 x 94 Lg w / 6 Offset Bend x 1 5/16-12 FJIC	4
9	N36444	Oil Line - 1/2 x 94 Lg w / 6 Offset Bend x 3/4-16 FJIC	2
10	N15991	Hyd Hose - 3/4 x 12 Lg w/1 1/16-12 FJIC	1
11	N37900	Hyd Hose - 3/4 x 18 Lg w/1 1/16-12 FJIC	1
12	N50900	Hyd Hose - 3/4 x 52 Lg w/1 5/16-12 MJIC x 1 1/16-12 FJIC	2
12	**N53491**	**Hyd Hose - 3/4 x 62 Lg w/1 5/16-12 MJIC x 1 1/16-12 FJIC**	**2**
13	N37037	Hyd Hose - 3/4 x 270 Lg w/1 5/16-12 MJIC x 1 1/16-12 MORB	2
14	D-4951	Nylon Tie Strap - 7 3/8 Lg	12
15	N50901	Hyd Hose - 3/8 x 62 Lg w/9/16-18 FJIC x 3/4-16 MJIC	2
15	**N53492**	**Hyd Hose - 3/8 x 72 Lg w/9/16-18 FJIC x 3/4-16 MJIC**	**2**
16	N37180	Hyd Hose - 3/8 x 270 Lg w/3/4-16 MJIC x 7/8-14 MORB	1
17	N16388	Tee - (2) 1 1/16-12 MJIC x (1) 1 1/16-12 MORB	2
18	N16359	90 Elbow - 1 1/16-12 MJIC x 1 1/16-12 MORB	2
19	N19578	45 Elbow - 9/16-18 MJIC x 9/16-18 MORB	1
20	N36380	45 Elbow - Swivel - 3/4-16 FJIC x 3/4-16 MJIC	1
21	N36382	45 Elbow - Swivel - 1 5/16-12 FJIC x 1 5/16-12 MJIC	2
22	N25754	Connector - 3/4-16 MJIC	2
23	N19338	Connector - 1 5/16-12 FJIC x 1 1/16-12 MJIC - (9445, 9550, 9650)	2
24	N16346	Connector - 1 5/16-12 MJIC	3
25	N34576	Tag - Hose ID - Air Tank - Fan/Auger - PRESSURE	3
26	N34577	Tag - Hose ID - Air Tank - Fan/Auger - RETURN	3
27	N34578	Tag - Hose ID - Air Tank - Fan/Auger - CASE DRAIN	3
28	C-4698	Nylon Oil Line Clamp	14
29	D-4808	Oil Line Clamp	8
30	N21632	Oil Line Spacer	4
31	C-3664	Hex Bolt - 3/8 x 5 1/2 Lg	4
32	N15559	Spacer - 0.385 ID x 5/8 OD x 1 Lg	4
33	N34498	Male Pioneer Tip - 7/8-14 FORB	3
34	N34488	Pioneer Coupler - 7/8-14 FORB	3
35	N37914	3/4 Male Tip - 1 1/16-12 FORB	2
	N69669	Kit-Hydraulic Tip Adapter -1/2 Male Pioneer (See Page 14-63 for details)	
36	N37915	3/4 Female Coupler - 1 1/16-12 FORB	2
37	N34620	Connector - Swivel - 7/8-14 MORB x 7/8-14 FJIC	4
38	C-4401	Cross - (4) 7/8-14 MJIC	1
39	K-5806	90 Elbow - Swivel - 7/8-14 MJIC x 7/8-14 FJIC	2
40	N19434	Hyd Hose - 3/4 x 35 Lg w/1 5/16-12 MJIC x 1 1/16-12 FJIC - (9445, 9550, 9650)	4
41	D10821	Hyd Hose - 3/8 x 38 Lg w/3/4-16 FJIC - (9445, 9550, 9650)	1
42	N37036	Hyd Hose - 3/4 x 396 Lg w/1 1/16-12 MORB	2
42A	N37035	Hyd Hose - 3/4 x 348 Lg w/1 1/16-12 MORB	2
42B	N44955	Hyd Hose - 3/4 x 456 Lg w/1 1/16-12 MORB (5-Frame Contour Air Drill)	2
43	N36045	Hyd Hose - 3/8 x 396 Lg w/7/8-14 MORB	1
43A	N36043	Hyd Hose - 3/8 x 348 Lg w/7/8-14 MORB	1
43B	N44956	Hyd Hose - 3/8 x 456 Lg w/7/8-14 MORB (5-Frame Contour Air Drill)	1
44	K50961	Connector - 3/4-16 MORB x 7/8-14 FORB	1
45	K50834	3/8 Flat Face Tip - 3/4-16 FORB	1

Prior to March 2014 -

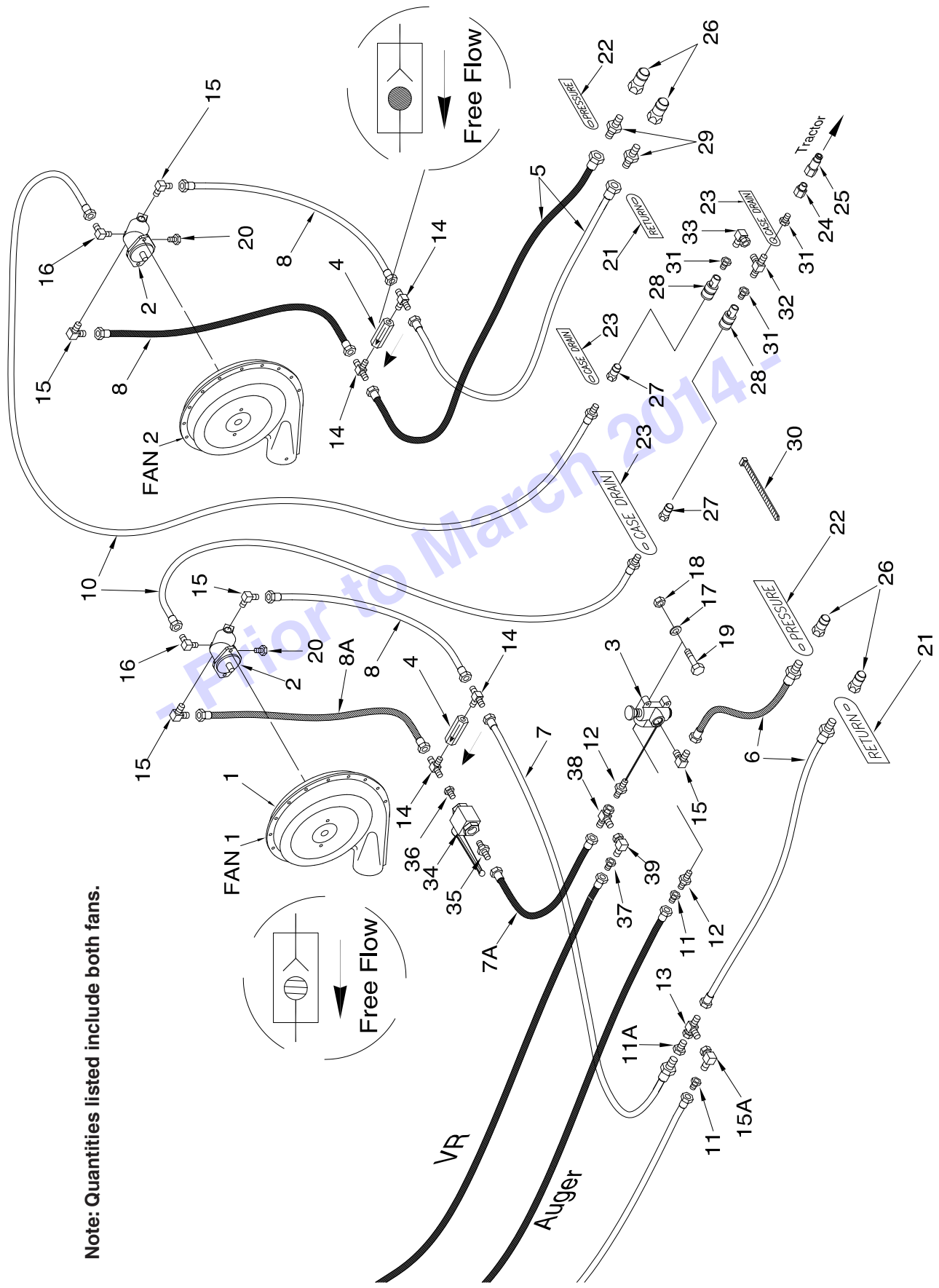

Prior to March 2014

Dual Fan - Tow Between

Item	Part No.	Description	Qty
1	* * * * *	Fan - See Section 11	2
2	* * * * *	Hydraulic Motor - Rexroth - See Section 11	2
3	N37514	Selector Valve (Seal Kit # N31603) (Knob # C26358)	1
4	N16399	Check Valve - 7PSI - 1 1/16-12 ORB	2
5	N50084	Hyd Hose - 3/4 x 132 Lg w/ 7/8-14 FJIC x 1 1/16-12 FJIC	2
6	N37038	Hyd Hose - 3/4 x 84 Lg w/ 1 1/16-12 MORB x 1 1/16-12 FJIC	2
7	N50900	Hyd Hose - 3/4 x 52 Lg w/1 5/16-12 MJIC x 1 1/16-12 FJIC	1
7A	N25644	Hyd Hose - 3/4 x 35 Lg w/1 1/16-12 FJIC	1
8	N15991	Hyd Hose - 3/4 x 12 Lg w/1 1/16-12 FJIC	3
8A	N37900	Hyd Hose - 3/4 x 18 Lg w/1 1/16-12 FJIC	1
9	F-5679	Hyd Hose - 1/2 x 96 Lg w/7/8-14 MJIC x 7/8-14 FJIC	2
10	N37404	Hyd Hose - 3/8 x 152 w/ 7/8-14 MORB X 9/16-18 FJIC	1
11	N19337	Connector - 7/8-14 MJIC x 1 1/16-12 FJIC	2
11A	N19338	Connector - 1 5/16 (#16) FJIC x 1 1/16 (#12) MJIC	1
12	N15990	Connector - 1 1/16-12 MJIC x 1 1/16-12 MORB	2
13	N29356	Tee - Swivel - (1) - 1 1/16 FJIC x (2) - 1 1/16 MJIC	1
14	N16388	Tee - (2) 1 1/16-12 MJIC x (1) 1 1/16-12 MORB	4
15	N16359	90 Elbow - 1 1/16-12 MJIC x 1 1/16-12 MORB	5
15A	N21189	90 Elbow - Swivel - 1 1/16-12 FJIC x 1 1/16-12 MJIC	1
16	N19578	45 Elbow - 9/16-18 MJIC x 9/16-18 MORB	2
17	W-522	Lockwasher - 5/16	2
18	W-513	Hex Nut - 5/16	2
19	S-1303	Hex Bolt - 5/16 x 2 Lg	2
20	N16621	Plug - 9/16-18 MORB	2
21	N34577	Tag - Hose ID Tank - Fan/Auger - RETURN	2
22	N34576	Tag - Hose ID - Tank - Fan/Auger - PRESSURE	2
23	N34578	Tag - Hose ID - Tank - Fan/Auger - CASE DRAIN	3
24	K50961	Connector - 3/4-16 MORB x 7/8-14 FORB	1
25	K50834	3/8 Flat Face Tip - 3/4-16 FORB	1
26	N37914	3/4 Male Pioneer Tip - 1 1/16-12 FORB	2
	N69669	Kit-Hydraulic Tip Adapter -1/2 Male Pioneer (See Page 14-63 for details)	
27	N34498	1/2 Male Pioneer Tip - 7/8-14 FORB	7
28	N34488	1/2 Female Pioneer Coupler - 7/8-14 FORB	2
29	N47903	Connector - 7/8-14 MJIC x 1 1/16-12 MORB	2
30	D-4951	Nylon Tie Strap -7 3/8 Lg	7
	D-4838	Nylon Tie Strap -14 1/2 Lg	2
31	N34620	Connector - Swivel - 7/8-14 MORB x 7/8-14 FJIC	3
32	C-4394	Tee - (3) 7/8-14 MJIC	1
33	K-5806	90 Elbow - Swivel - 7/8-14 MJIC x 7/8-14 FJIC	1
34	N37845	Ball Valve (Handle - N66053)	1
35	N15990	Connector - 1 1/16-12 MJIC x 1 1/16-12 MORB	1
36	N37849	Connector - 1 1/16-12 FJIC x 1 1/16-12 MORB	1
37	N19337	Connector - 7/8-14 MJIC x 1 1/16-12 FJIC	1
38	N29356	Swivel Tee - (1) - 1 1/16-12 FJIC x (2) - 1 1/16-12 MJIC	1
39	N21189	90 Elbow - Swivel - 1 1/16-12 FJIC x 1 1/16-12 MJIC	1

Prior to March 2014 -

Variable Rate System
Valve Manifold - 3 Bank

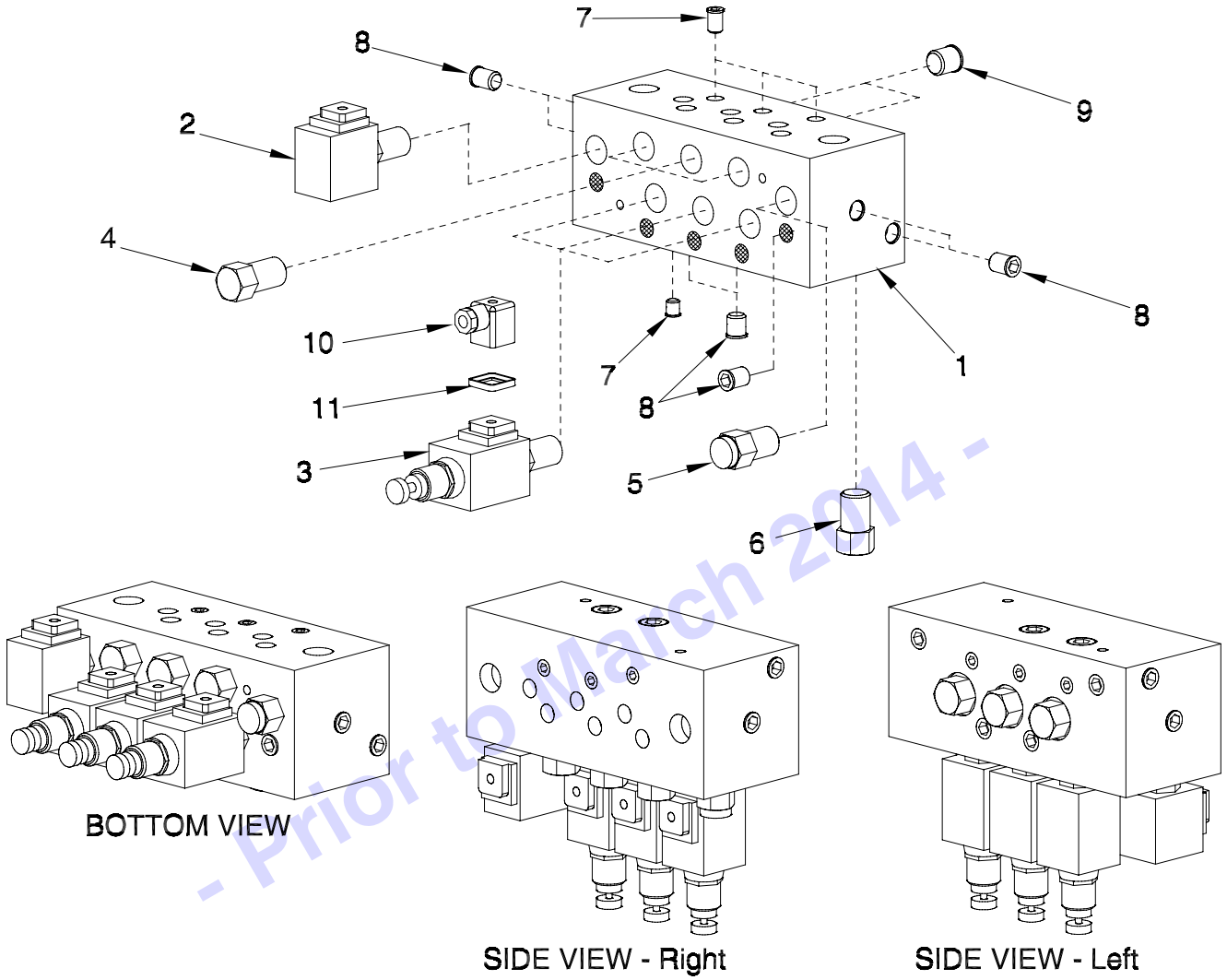

- Prior to March 2014 -

Item	Part No.	Description	Qty
1	N45508	Valve Manifold Block	1
2	N45509	Valve - Dump - Solenoid	1
3	N47440	Valve - Solenoid - Flow Element	3
4	N29324	Valve - Flow Restrictor - Slave	3
5	N29325	Valve - Flow Regulator - Supply	1
6	N29328	Valve - Flow Regulator - Drain	3
7	N45511	Male Plug - 4 SAE Tapered	6
8	N45512	Male Plug - 6 SAE Tapered	13
9	N45513	Male Plug - 8 SAE Tapered	2
10	N29329	DIN Connector - Plug w/Gasket	4
11	N29331	Gasket - DIN Connector	4
	N45505	Valve Manifold Assembly (Includes above items except 10 & 11)	

Variable Rate System
Valve Manifold - 4 Bank

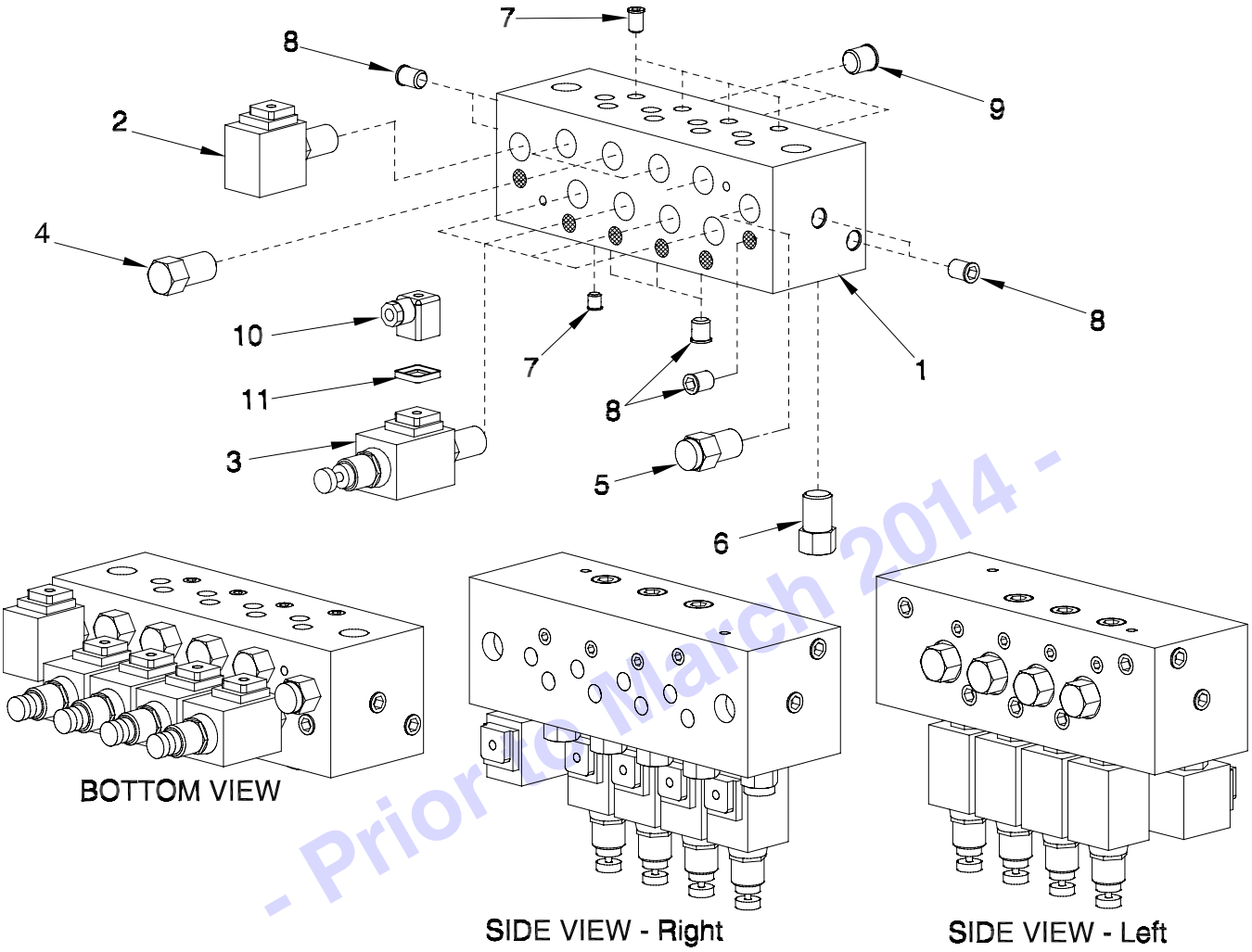

- Prior to March 2014 -

Item	Part No.	Description	Qty
1	N45508	Valve Manifold Block	1
2	N45509	Valve - Dump - Solenoid	1
3	N47440	Valve - Solenoid - Flow Element	4
4	N29324	Valve - Flow Restrictor - Slave	4
5	N29325	Valve - Flow Regulator - Supply	1
6	N29328	Valve - Flow Regulator - Drain	4
7	N45511	Male Plug - 4 SAE Tapered	8
8	N45512	Male Plug - 6 SAE Tapered	15
9	N45513	Male Plug - 8 SAE Tapered	3
10	N29329	DIN Connector - Plug w/Gasket	5
11	N29331	Gasket - DIN Connector	5
	N45195	Valve Manifold Assembly (Includes above items except 10 & 11)	

Notes

- Prior to March 2014 -

Section 19:
Monitor and Clutch

Section Contents

Monitor - Ground Drive 19-3
- Harness Connections 19-3
- LOUP Elite Monitor - 2021 to Present 19-4
- Version 3 Monitor - Prior to 2021 19-6
- FTU - Field Test Unit 19-9
- Clutch Harness and Switch 19-10
- Optional Clutch 19-11
- Optical Blockage System 19-12

AGTRON 19-13
- ART Blockage System 19-13
- LEGEND Blockage System 19-14

Remote Clutch Switch - Optional 19-16
- Tillage 19-16
- Maxim III 19-18
- C2 Contour and RAZR 19-19

Digi-Star Weigh Scale 19-20
- Tow Between 19-20
- Tow Behind 19-22

Variable Rate System 19-24
- X20 - TopCon System 19-24
- EAGLE - TopCon System 19-27
- Valve and Control Mount 19-30
- Valve and Control Mount Version 2 19-32

X30 with IB-1 TopCon System 19-34
- Cart Harness 19-34
- VR Harness 19-36
- ICT System 19-38
- Tractor Installation 19-40

Section Contents

X30 Apollo TopCon System - Prior to 2018 19-42
- Control and Valve Mount 19-42
- Cart Harness 19-44
- ICT System 19-46
- Tractor without ISO BUS - X30 Installation - 2016 19-48
- Tractor without ISO BUS - X30 Installation - 2017 19-49
- Seed Unit - Tow Behind Cart 19-50
- AGI-4 Receiver Kit 19-51

X35 Apollo TopCon System - 2018 19-52
- Control and Valve Mount 19-52
- Cart Harness 19-54
- ICT System 19-56
- Tractor without ISO BUS - X35 Installation 19-58
- Seed Unit - Tow Behind Cart 19-59

X35 Apollo TopCon System - 2019 to present 19-60
- Control and Valve Mount 19-60
- 2018 Harness Transition - Tow Behind 19-62
- Cart Harness - Tow Behind 19-66
- Cart Harness - Tow Between 19-68
- ICT System - Tow Behind 19-70
- ICT System - Tow Between 19-72
- Tractor without ISO BUS - X35 Installation 19-74
- AGI-4 Receiver Kit 19-75

QUANTUM 19-76
- Apollo - Lift and Pressure Control Kit 19-76

Liquid and NH3 System 19-78

Monitor - Ground Drive Harness Connections

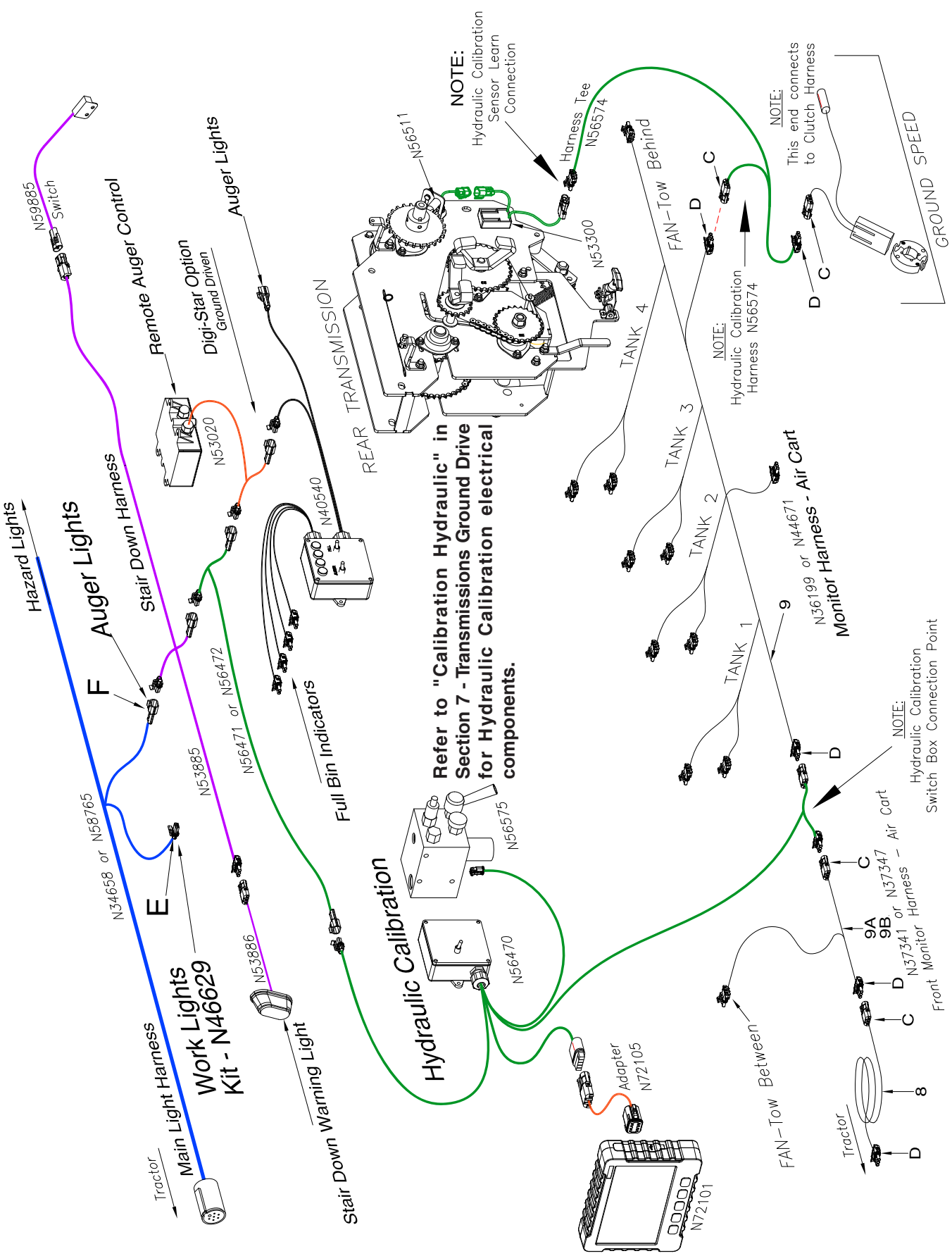

Refer to "Calibration Hydraulic" in Section 7 - Transmissions Ground Drive for Hydraulic Calibration electrical components.

The current Vansco N44049 monitor has been discontinued by the supplier, in its place Morris is pleased to introduce the new N72101 Loup Elite monitor. This is a running change for the 2021 production year.

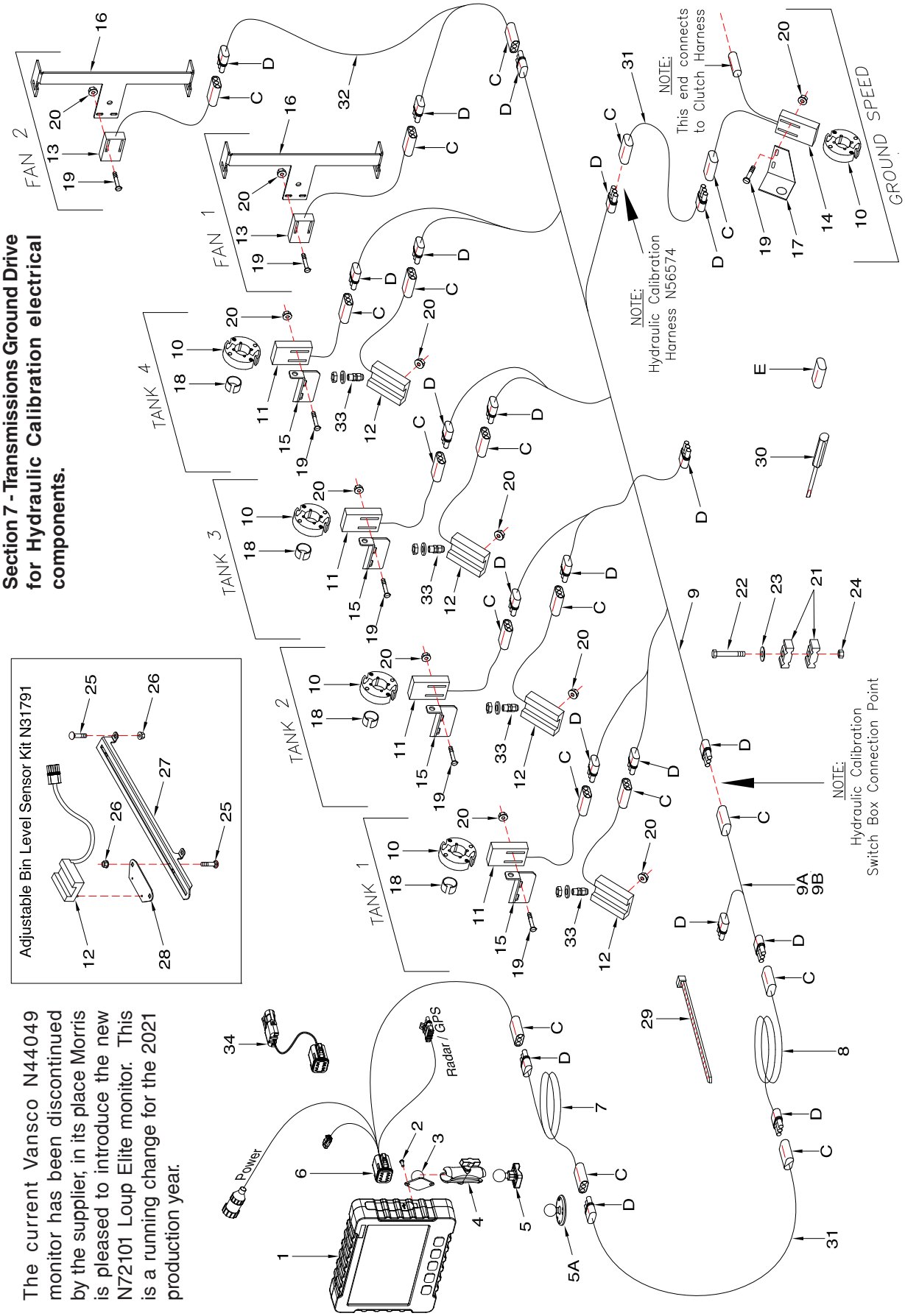

LOUP Elite Monitor - 2021 to Present			
Item	**Part No.**	**Description**	**Qty**
		Monitor Assembly	
1	N72101	Monitor - LOUP Elite	1
	N72100	Kit LOUP Elite - Includes items 1, 2, 3, 4, 5 and 6	
2	N44265	Machine Screw - #10-32 x 1/2	2
3	N45644	Ball Mount - 1" used on back of Monitor (RAM-B-238)	1
4	N45645	Mount Arms - 1" (RAM B-201)	1
5	N45646	Ball Mount - 1" used to mount in Tractor Cab (RAM-B-231)	1
5A	N55469	Mounting Ball - Monitor Mount on Cart Frame- 1 Diameter Ball (RAM-B-202-U)	1
6	N72102	Harness - Tractor Monitor	
7	N32470	Wire - Monitor Extension - 21ft (Weather Pak)	1
8	N32471	Wire - Monitor Extension - 37 1/2 ft (Weather Pak) Tow Behind ONLY	1
9	N36199	Harness - Monitor - Small Frame 9365, 9450 & (Shown)	1
	N44671	Harness - Monitor - Small Frame 9535	1
	N44671	Harness - Monitor - Large Frame 9445, 9550 & 9650	1
9A	N37341	Harness - Monitor - Extension - Tow Between	1
9B	N37347	Harness - Monitor - Extension - Tow Behind	1
10	N16471	Reed Switch Actuator - 4 Magnet	4
11	N27617	Reed Switch	3
12	N27616	Sensor - Bin Level c/w Gasket	3
13	N27618	Magnetic Sensor - Fan - (1 Per Fan)	1
14	N27619	Reed Switch - Ground	1
15	N36405	Sensor Mount - Metershaft - Main	3
16	N37809	Sensor Mount - 17 Dia Fan	1
17	N27621	Sensor Mount - Main Switch - Ground	1
18	N19599	Bushing - Spacer	3
19	N16563	Machine Screw - #8 - 32 UNC x 1 1/4 Lg	10
20	N16564	Serrated Locknut - #8 - 32 UNC	13
21	C-4698	Nylon Clamp	2
22	W-479	Hex Head Bolt - 3/8 x 2 1/4 Lg	1
23	W-538	Flatwasher - 3/8	1
24	M-3388	Locknut - 3/8	1
25	D-5259	Carriage Head Bolt - 5/16 x 3/4 Lg	6
26	D-5278	Serrated Nut - 5/16	6
27	N40899	Adjustment Plate	1
28	N31790	Base Plate	1
29	D-4838	Nylon Tie Strap - 14 1/2 Lg (Black)	1
30	N27625	Assembly Tool - Packard Connector	1
31	**N56067**	**Wire - Monitor Extension - 6ft (Wheather Pak) - 9445, 9550, 9650, 9800 and 91000**	**2**
		Dual Fan Assembly	
32	N50069	Y-Cable - Dual Fan Option	1
33		**Wire Groument Components**	
	N56748	Bimed Locknut - Per Tank	1
	N56749	Bimed Cable Gland - Per Tank	1
	N56750	M-16 Washer - Nitrile Rubber - Per Tank	1
34	N72105	Harness - HYD CAL adapter - Loop Elite Monitor - Can be used as an adapter to plug Elite Monitor into Version 3 harness N44253	1
	N72270	Elite Operator's Manual	
		Replacement Parts on Page 19-8	

The current Vansco N44049 monitor has been discontinued by the supplier, in its place Morris is pleased to introduce the new N72101 Loup Elite monitor. This is a running change for the 2021 production year.

Refer to "Calibration Hydraulic" in Section 7 Transmissions Ground Drive for Hydraulic Calibration electrical components.

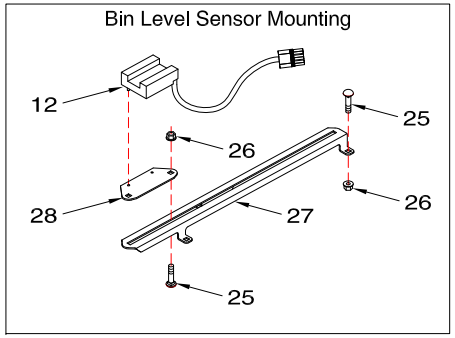

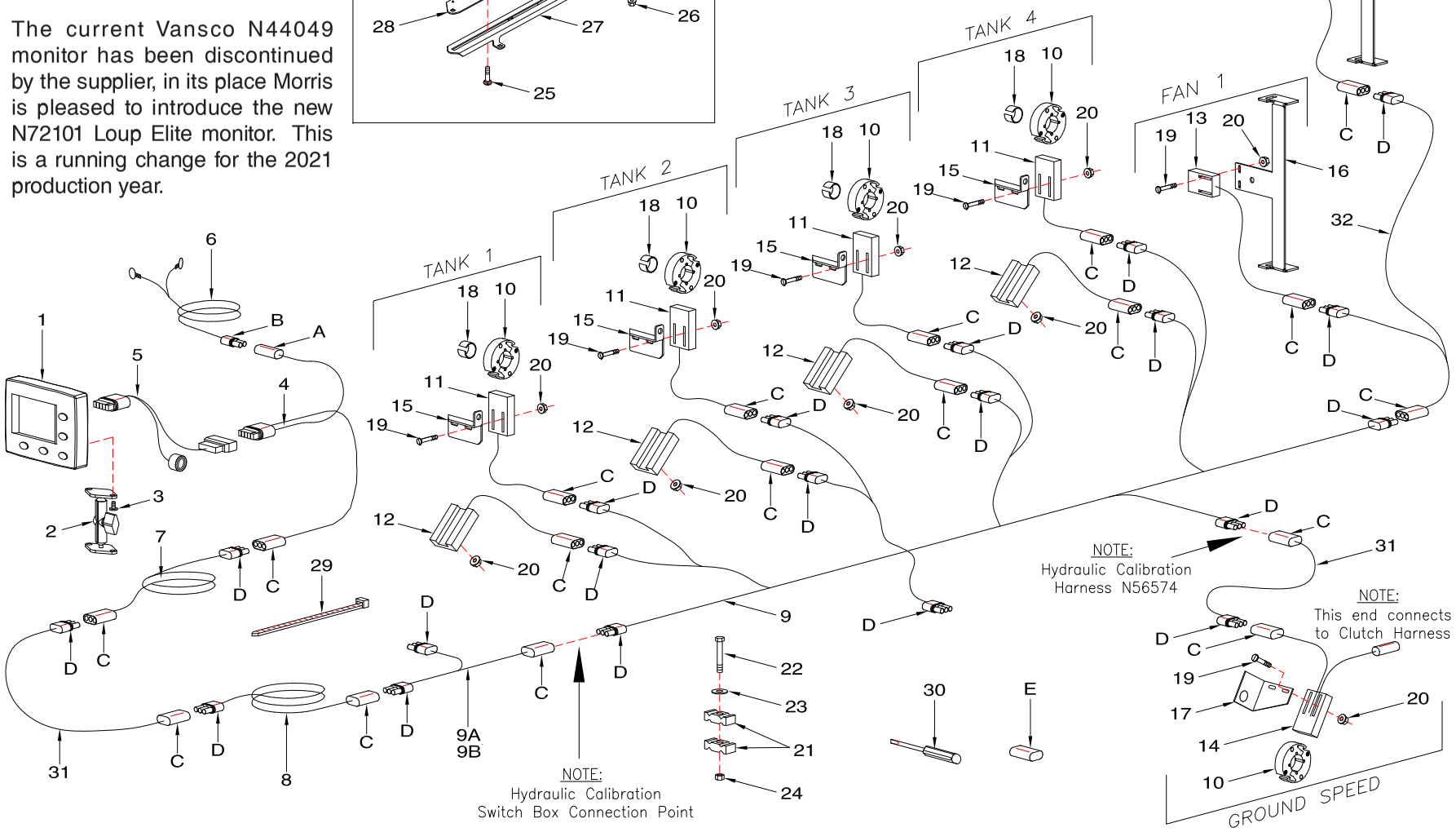

Monitor - Version 3 Monitor - Prior to 2021

Item	Part No.	Description	Qty
		Monitor Assembly	
1	N44049	Monitor - Version 3 - NEW	1
2	N45644	Ball Mount - 1" used on back of Monitor (RAM-B-238)	1
	N45645	Mount Arms - 1" (RAM B-201)	1
	N45646	Ball Mount - 1" used to mount in Tractor Cab (RAM-B-231)	1
	N55469	Mounting Ball - Monitor Mount on Cart Frame- 1 Diameter Ball (RAM-B-202-U)	1
3	N44265	Machine Screw - #10-32 x 1/2	2
4	N44253	Power Cable - VMD Monitor	1
5	N44264	Alarm and Cable Assembly - Optional	1
	N44256	Alarm	
	N44255	Adaptor Cable	
6	N27609	Power Cable - Monitor	1
7	N32470	Wire - Monitor Extension - 21ft (Weather Pak)	1
8	N32471	Wire - Monitor Extension - 37 1/2 ft (Weather Pak) Tow Behind ONLY	1
9	N36199	Harness - Monitor - Small Frame 9365, 9450 & (Shown)	1
	N44671	Harness - Monitor - Small Frame 9535	1
	N44671	Harness - Monitor - Large Frame 9445, 9550 & 9650	1
9A	N37341	Harness - Monitor - Extension - Tow Between	1
9B	N37347	Harness - Monitor - Extension - Tow Behind	1
10	N16471	Reed Switch Actuator - 4 Magnet	4
11	N27617	Reed Switch	3
12	N27616	Sensor - Bin Level c/w Gasket	3
13	N27618	Magnetic Sensor - Fan - (1 Per Fan)	1
14	N27619	Reed Switch - Ground	1
15	N36405	Sensor Mount - Metershaft - Main	3
16	N37809	Sensor Mount - 17 Dia Fan	1
17	N27621	Sensor Mount - Main Switch - Ground	1
18	N19599	Bushing - Spacer	3
19	N16563	Machine Screw - #8 - 32 UNC x 1 1/4 Lg	10
20	N16564	Serrated Locknut - #8 - 32 UNC	13
21	C-4698	Nylon Clamp	2
22	W-479	Hex Head Bolt - 3/8 x 2 1/4 Lg	1
23	W-538	Flatwasher - 3/8	1
24	M-3388	Locknut - 3/8	1
25	D-5259	Carriage Head Bolt - 5/16 x 3/4 Lg	6
26	D-5278	Serrated Nut - 5/16	6
27	N40899	Adjustment Plate	1
28	N31790	Base Plate	1
29	D-4838	Nylon Tie Strap - 14 1/2 Lg (Black)	1
30	N27625	Assembly Tool - Packard Connector	1
31	**N56067**	**Wire - Monitor Extension - 6ft (Wheather Pak) - 9445, 9550, 9650, 9800 and 91000**	**2**
		Dual Fan Assembly	
32	N50069	Y-Cable - Dual Fan Option	1
		Replacement Parts on Next Page	
		Wire Groument Components	
	N56748	Bimed Locknut - Per Tank	1
	N56749	Bimed Cable Gland - Per Tank	1
	N56750	M-16 Washer - Nitrile Rubber - Per Tank	1

Monitor - Monitor and Blockage Module

Item	Part No.	Description	Qty
		Replacement Connectors	
A	N29384	Weather Pak Connector - BLACK - 2 Pin Plug	
B	N29385	Weather Pak Connector - BLACK - 2 Pin Socket	
C	N27613	Weather Pak Connector - BLACK - 3 Pin Plug (Male)	
D	N27614	Weather Pak Connector - BLACK - 3 Pin Socket (Female)	
E	N27615	Seal Connector - BLACK - 3 Pin	
H	N29151	Weather Pak Connector - BLACK - 4 Pin Plug	
I	N29152	Weather Pak Connector - BLACK - 4 Pin Socket	
J	N29153	Seal Connector - BLACK - 4 Pin	
	N29147	Seal - Weather Pak - Cavity Plug (Not Shown)	
	N29148	Seal -Weather Pak - Wire Plug (Not Shown)	
	N29149	Terminal - Weather Pak - Male End (Not Shown)	
	N29150	Terminal - Weather Pak - Female End (Not Shown)	
		Replacement Parts (Not Shown)	
	N24391	Fuse Holder & Cap (Installed in Clutch Switch Box N27011)	
	N24302	Magnet Only - 1/4 Round x 3/4 Lg (Installed in Items #6 & 7) - pairs only	
		ORDER KITS THROUGH WHOLEGOODS ONLY	

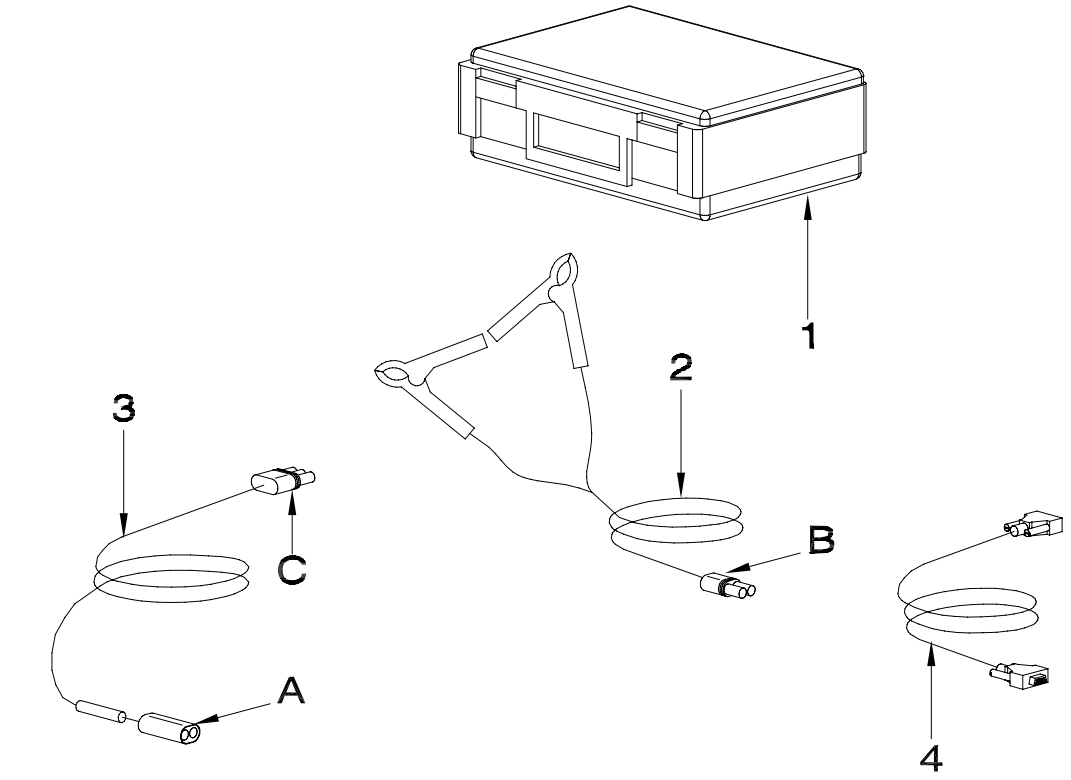

For diagnostic use on version 3 monitor N44049.

Item	Part No.	Description	Qty
		FTU - Field Test Unit	
1	N27119	FTU - Field Test Unit	1
2	N32492	Power Cable - FTU - 10 ft - Test Clip	1
3	N32491	Power Cable - 3 ft - Main	1
4	N32494	Adaptor Cable - FTU - for PC	1
5	N34177	FTU - Operation Manual (Not Shown)	1
		Replacement Connectors	
A	N29384	Weather Pak Connector - BLACK - 2 Pin Plug (Shroud)	
B	N29385	Weather Pak Connector - BLACK - 2 Pin Socket (Tower)	
C	N27614	Weather Pak Connector - BLACK - 3 Pin Socket (Tower)	

Clutch - Ground Drive
Clutch Harness and Switch

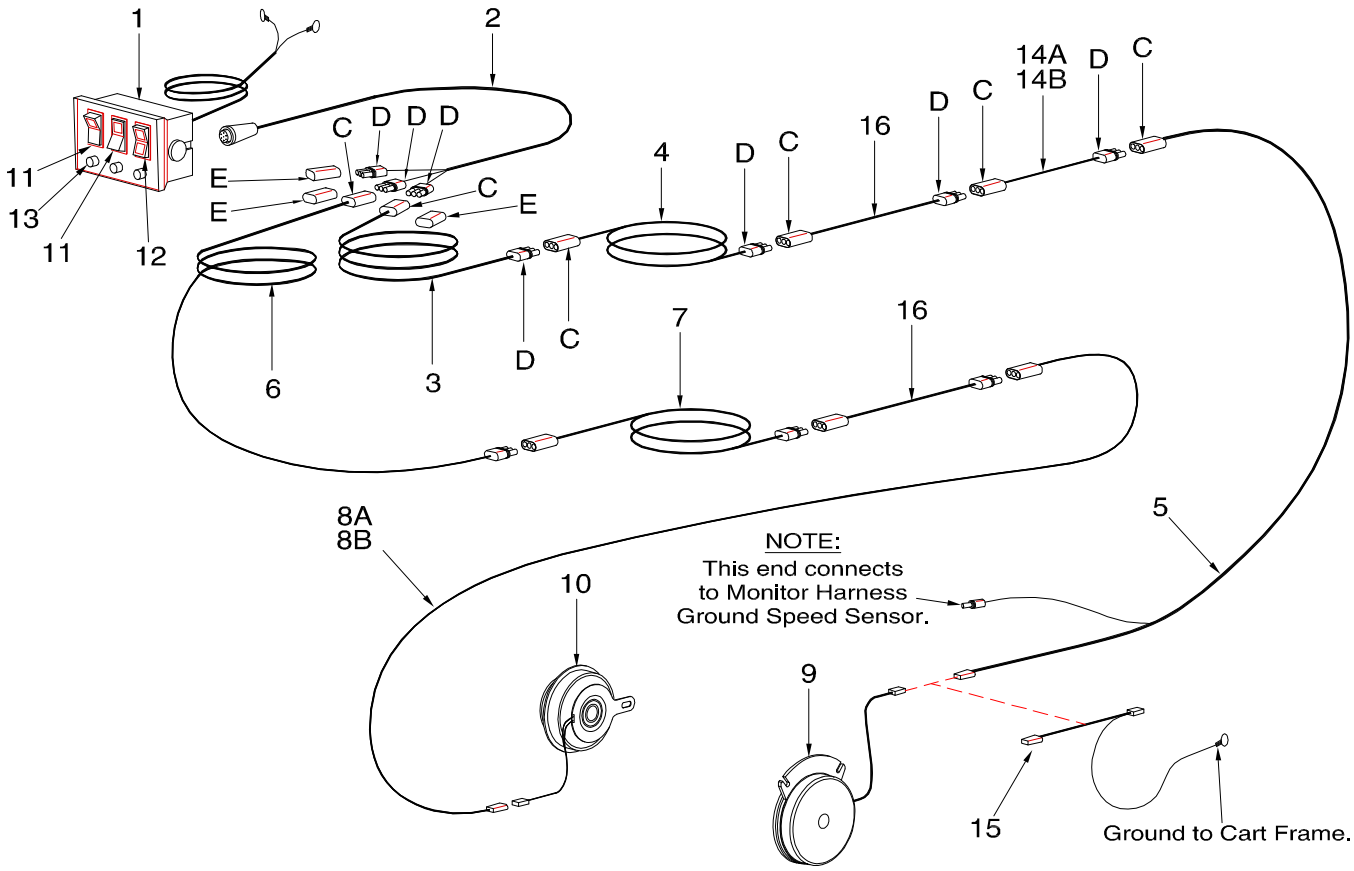

Item	Part No.	Description	Qty
1	N27011	Clutch Switch - Main - (Fuse 7.5 amp - N30594)	1
2	N27012	Clutch Wire - Extension - 8 ft	1
3	N32456	Clutch Wire - Extension - 16 ft (Weather Pak)	1
4	N32457	Wire - Clutch Extension - 37 1/2 ft (Weather Pak) Tow Behind Only	1
5	N36200	Clutch Harness - Main - 9365, 9450 and 9535	1
	N44669	Clutch Harness - Main - 9445, 9550 and 9650	1
6	N32458	Wire - Clutch Extension (Aux) - 16 ft (Weather Pak)	2
7	N32460	Wire - Clutch Extension (Aux) - 37 1/2 ft (Weather Pak)	1
8A	N37343	Clutch Harness - Secondary - 31 ft - Tow Between	1
8B	N37346	Clutch Harness - Secondary - 43 ft - Tow Behind	1
9	N51260	Electric Clutch - 200 ft-lb - Main	1
10	N16862	Electric Clutch - 105 ft-lb - Secondary (N19502 bearing)	1
11	N29382	Clutch Rocker Switch - 2 Way - #83301	2
12	N29383	Granular Rocker Switch - 3 Way - #200301	1
13	N30594	Fuse - 7.5 amp	3
14A	N37342	Clutch wire - Extension - 12 ft - Tow Between	1
14B	N37344	Clutch wire - Extension - Main - Tow Behind	1
15	N44734	Clutch Ground Wire	1
16	**N56068**	**Wire-Clutch Extension-6ft (Wheather Pak) - 9445, 9550, 9650, 9800 and 91000 Behinds**	**2**
C	N27613	Weather Pak Connector - BLACK - 3 Pin Shroud (Male)	
D	N27614	Weather Pak Connector - BLACK - 3 Pin Tower (Female)	
E	N27615	Seal Connector - BLACK - 3 Pin	

Clutch - Ground Drive
Optional Clutch

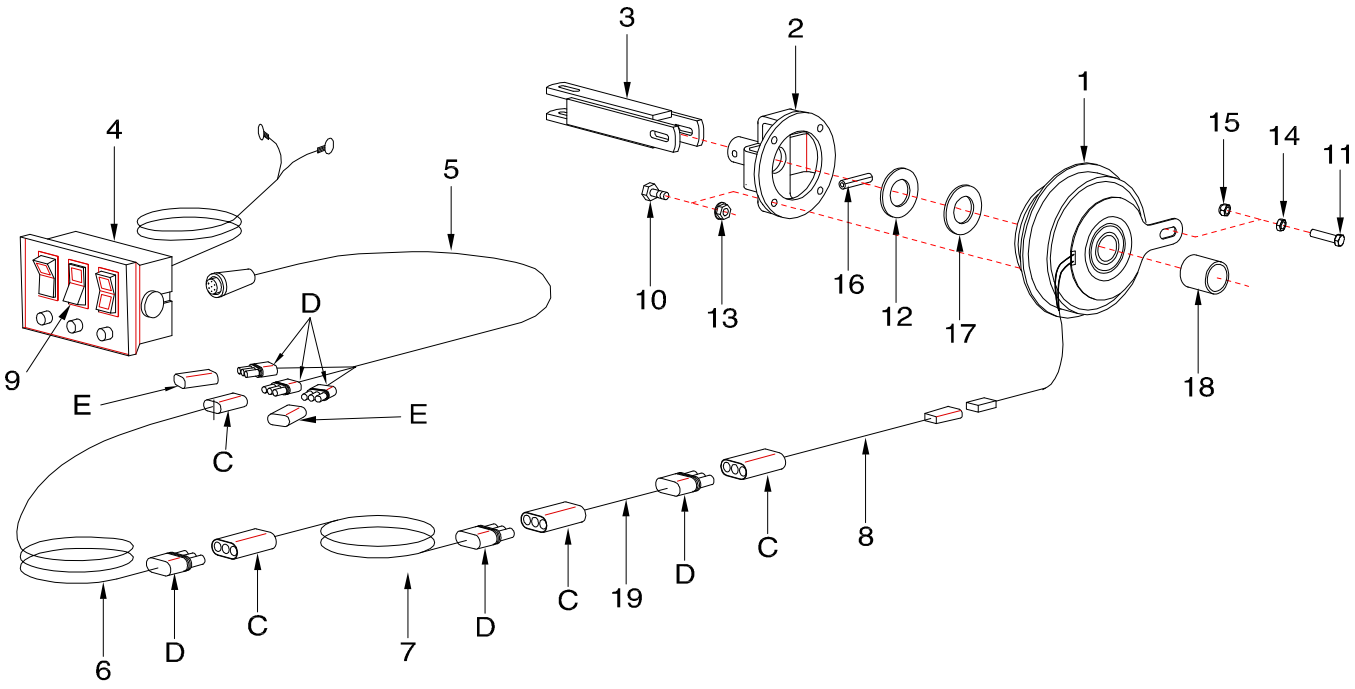

Item	Part No.	Description	Qty
1	N16862	Electric Clutch - 12 Volt (N19502 bearing)	1
2	N19470	Coupler - Fertilizer Clutch	1
3	N21287	Coupler - Metering - 5 5/8 Lg	1
4	N27011	Clutch Switch - Main - (Fuse 7.5 amp - N30594)	1
5	N27012	Clutch Wire - Extension - 8 ft	1
6	N32458	Wire - Clutch Extension (Aux) - 16 ft (Weather Pak)	1
7	N32460	Wire - Clutch Extension (Aux) - 37 1/2 ft (Weather Pak)	1
8	N32459	Clutch Wire (Aux)(Weather Pak)	1
	N24583	Clutch Wire (Bulk/ft)	
9	N29382	Clutch Rocker Switch - 2 Way - #83301	1
10	W-469	Hex Bolt - 1/4 x 3/4 Lg	4
11	W-477	Hex Bolt - 3/8 x 1 1/2 Lg	1
12	H18268	Flatwasher - 1 1/32 ID x 1 3/4 OD x 10 Ga Thick	2
13	D-5277	Serrated Locknut - 1/4	4
14	S-748	Jam Nut - 3/8	1
15	M-3388	Lock Nut - 3/8	1
16	S-4781	Spiral Pin - 1/4 x 1 1/2 Lg	1
17	N31040	Washer - 1 3/4 OD x 16 Ga Thick (As Req'd)	2
18	C21667	Spacer - 1 1/16 ID x 1 5/16 OD x 3/4 LG	1
19	N56068	Wire Extension - 6 ft - required with all 9800, 91000 Behinds and 9650 Behinds 2015	1
		Order Kits Through Wholegoods	
	N32780	Tow Behind Clutch Kit - Weather Pak (Includes All Above Items Except 4 & 5)	
	N32779	Tow Between Clutch Kit - Weather Pak (Includes All Above Items Except 4, 5 & 7)	
		See Pg 14-4 for a complete list of Replacement Connectors	
C	N27613	Weather Pak Connector - BLACK - 3 Pin Shroud (Male)	
D	N27614	Weather Pak Connector - BLACK - 3 Pin Tower (Female)	
E	N27615	Seal Connector - BLACK - 3 Pin	

Monitor - Ground Drive
Optical Blockage System

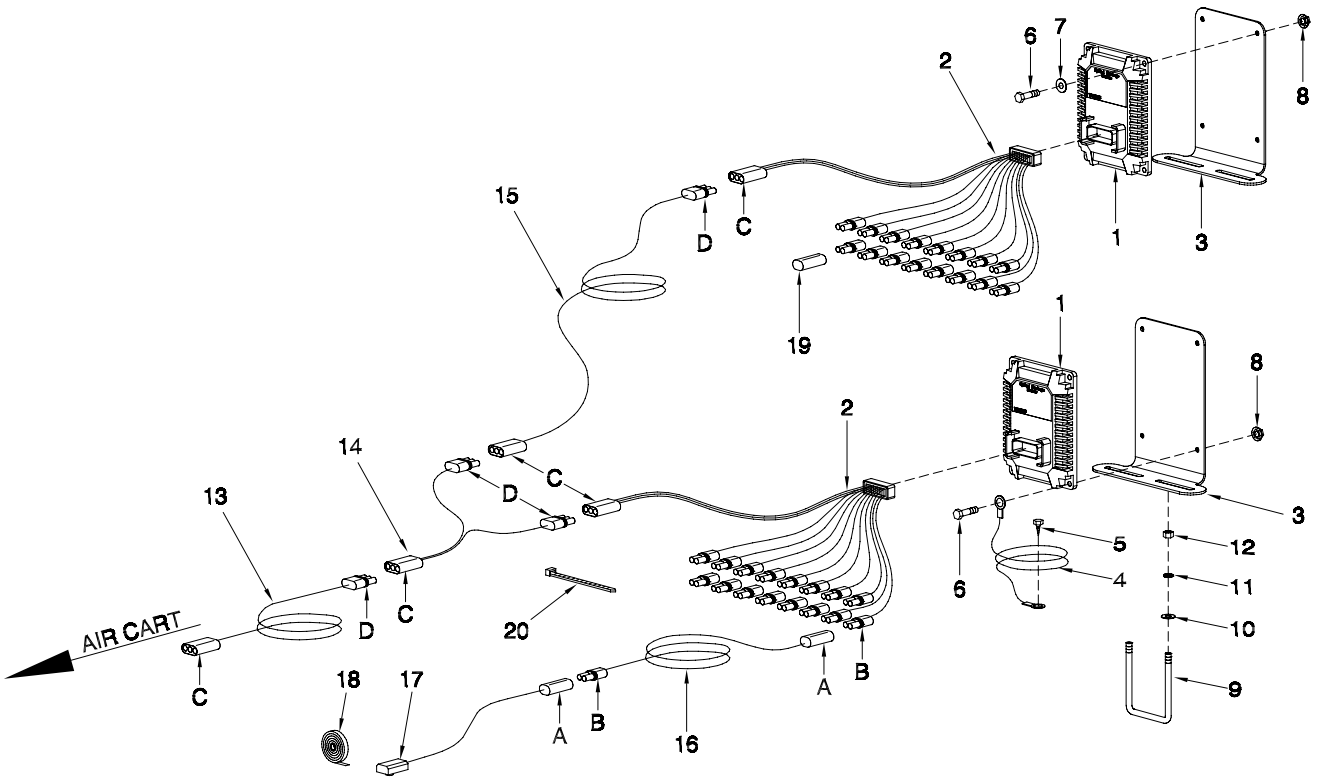

Item	Part No.	Description	Qty
1	N34989	Optical Module - Blockage	Asreq
2	N37012	Module Cable (Qty per Blockage Module)	1
3	N44013	Bracket - Mount (Qty per Blockage Module)	1
4	N31049	Wire - Ground - Blockage Module (Qty per Blockage Module)	1
5	N16698	Screw - 1/4 x 3/4 Self Tapping (Qty per Blockage Module)	1
6	W-1552	Hex Bolt - 1/4 x 1 Lg (Qty per Blockage Module)	4
7	S-1198	Flatwasher- 1/4 (Qty per Blockage Module)	3
8	D-5277	Serrated Locknut - 1/4 (Qty per Blockage Module)	4
9	N15098	U-Bolt - 3/8 x 4 x 5 (Qty per Blockage Module)	1
	N36148	U-Bolt - 3/8 x 3 x 4 (Optional Qty per Blockage Module)	1
	D12714	U-Bolt - 3/8 x 2 x 2 3/4 (Optional Qty per Blockage Module)	1
	N34024	U-Bolt - 3/8 x 2 x 6 (Optional Qty per Blockage Module)	1
	N31209	U-Bolt - 3/8 x 7 x 8 (Optional Qty per Blockage Module)	1
10	D-5489	Flatwasher - 3/8 (Qty per Blockage Module)	2
11	W-523	Lockwasher - 3/8 (Qty per Blockage Module)	2
12	W-514	Hex Nut - 3/8 (Qty per Blockage Module)	2
13	N34795	Wire - Blockage Module (Required for 1st Module ONLY)	1
14	N34791	Y-Cable (Required for each additional Module ONLY)	1
15	N34792	Extension Cable - 5 ft Lg	Asreq
	N34793	Extension Cable - 10 ft Lg	Asreq
	N34794	Extension Cable - 20 ft Lg	Asreq
	N34795	Extension Cable - 30 ft Lg	Asreq
16	N37014	Optical Sensor Extension Cable - 5 ft Lg	Asreq
	N37016	Optical Sensor Extension Cable - 10 ft Lg	Asreq
	N37018	Optical Sensor Extension Cable - 20 ft Lg	Asreq
	N37020	Optical Sensor Extension Cable - 30 ft Lg	Asreq
17	N37013	Optical Sensor	Asreq
18	N34841	Rubber Tape - 30 ft roll (will do 8 sensors)	Asreq
19	N29334	Weather Pak Seal Connector - 2 Pin	Asreq
20	N34715	Nylon Tie Strap - 5.6 Lg (Qty per Pin Sensor)	2
	D-4951	Nylon Tie Strap - 7.375 Lg	18
	S13336	Nylon Tie Strap - 24 Lg	20

AGTRON
ART Blockage System

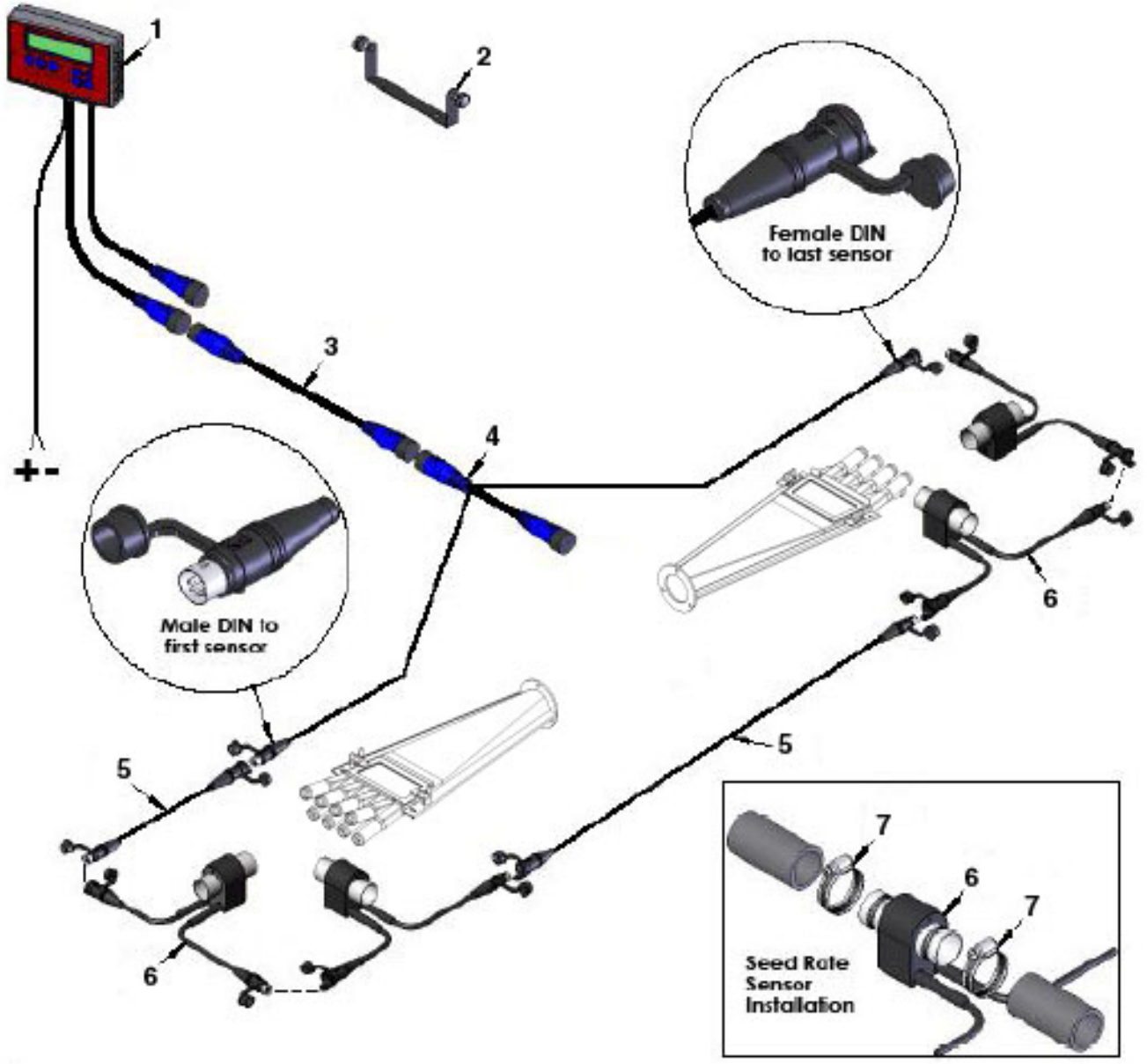

Item	Part No:	Description	No. Used ART100	No. Used ART260
1	N47469	Agtron ART100 monitor	1	-
1A	N47461	Agtron ART260 monitor	-	1
2	* * * * *	Monitor Mounting Bracket Kit	1	1
3	N47463	Extension Cable - 10ft (3m)	2	4
	N47464	Extension Cable - 20ft (6m)	1	2
4	N47462	'Y' Cable	1	2
5	N47465	Sensor Loop Cable - 2ft (0.6m)	-	-
	N47466	Sensor Loop Cable - 4ft (1.2m)	-	-
	N47467	Sensor Loop Cable - 10ft (3m)	6	12
	N47468	Sensor Loop Cable - 20ft (6m)	2	4
6	N47471	Sensor - Optical (24mm)	AsReq	AsReq
	N47472	Sensor - Optical (30mm)	AsReq	AsReq
7	N11470	Hose Clamp - HS-20	AsReq	AsReq
	N47470	Kit - ART100 Blockage Monitor (Includes 1, 2 to 5)		
	N47460	Kit - ART260 Blockage Monitor (Includes 1A to 5)		

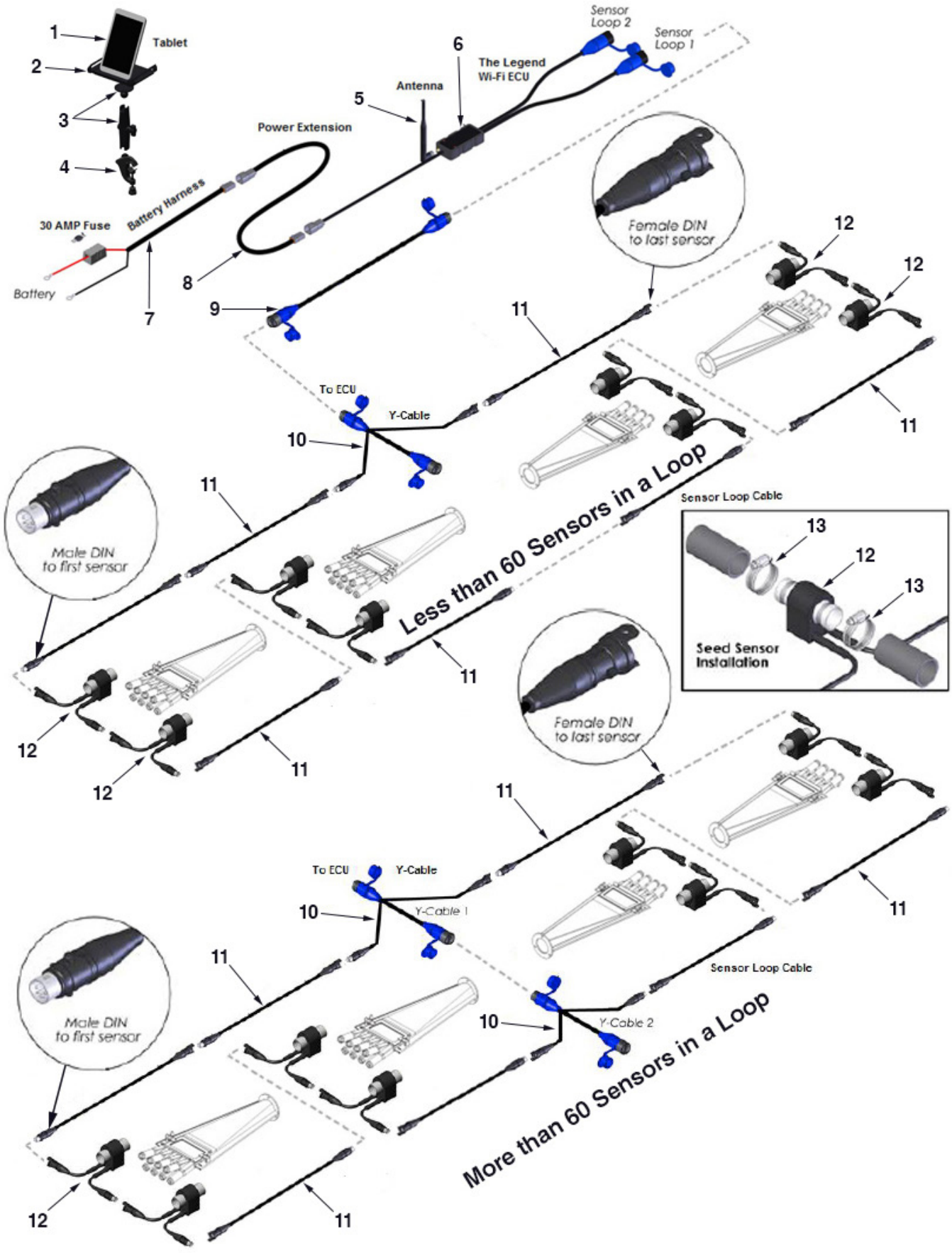
1
Tablet
2
3
4
30 AMP Fuse
Battery Harness
Battery
7
Power Extension
8
9
5
Antenna
6
The Legend
Wi-Fi ECU
Sensor
Loop 2
Sensor
Loop 1
Female DIN
to last sensor
12
12
11
11
To ECU
Y-Cable
10
Male DIN
to first sensor
11
Less than 60 Sensors in a Loop
11
Sensor Loop Cable
13
12
13
Seed Sensor
Installation
12
12
11
Female DIN
to last sensor
11
To ECU
Y-Cable
10
Y-Cable 1
11
Male DIN
to first sensor
Sensor Loop Cable
10
Y-Cable 2
More than 60 Sensors in a Loop
12
11

AGTRON - LEGEND Blockage System

Item	Part No.	Description	No Used	
			Single	Dual
1	N58694	Tablet and Cradle	1	1
2	N58656	Ram Mount Cradle 8" - 850033009	1	1
3	N58655	Ram Mount Arm - 850033001	1	1
4	N58658	Yoke Clamp Base - 850033002	1	1
5	N58651	Antenna - 7 Lg - 050013005	1	1
6	N58691	LEGEND Wi-Fi ECU - AGST410	1	1
7	N58652	Harness Battery - AGD2006	1	1
8	N62940	Power Extension Harness - 15 ft - DT04-2P (Optional)		
	N62941	Power Extension Harness - 35 ft - AGD2020 (Optional)		
9	N47464	Extension Cable - 20ft (6m) - Tow Between ONLY	2	4
10	N58692	Y-Cable LEGEND - 9ASTY10	1	2
		Note: Additional Y-Cable required when more than 60 sensors in a loop.		
11	N58693	Sensor Loop LEGEND - 10 ft - 9ASTX10	6	12
	N58653	Sensor Loop LEGEND - 20 ft - 9ASTX20	2	4
12	N58659	Seed Rate Sensor LEGEND - 15/16 Hose - AGST24E	AsReq	AsReq
12A	N62030	Seed Rate Sensor LEGEND - 1 1/8 Hose - AGST30E	AsReq	AsReq
13	N11470	Hose Clamp - HS-20 - 2 per Sensor	AsReq	AsReq
		Order Kits Through Wholegoods ONLY		
	N60161	Agtron "Legend" Tablet Kit (Inculdes items 1 to 4)		
	N60160	Agtron "Legend" Base Single Shoot Kit (Inculdes items 5, 6, 7 and 11)		
	N60170	Agtron "Legend" Base Double Shoot Kit (Inculdes items 5, 6, 7 and 11)		
	N62942	Agtron "Legend" 24mm Sensor Kit (Includes Item 12 and 13)		
	N62943	Agtron "Legend" 30mm Sensor Kit (Includes Item 12A and 13)		

8900/9000
MAXIM AIR DRILL FRONT MOUNT

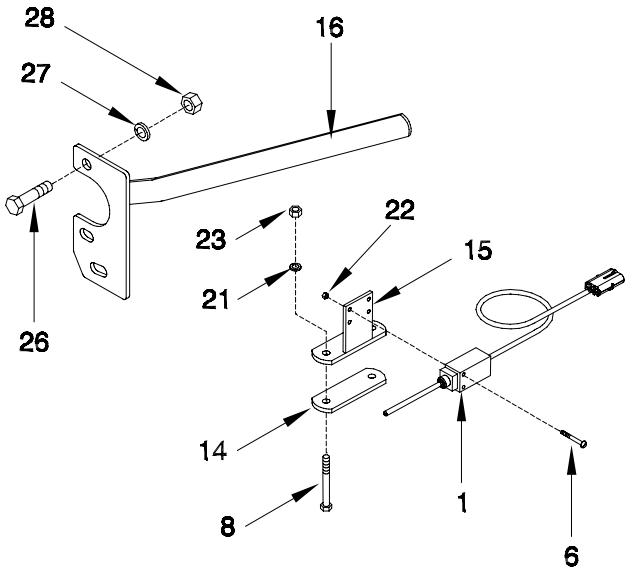

MAGNUM III

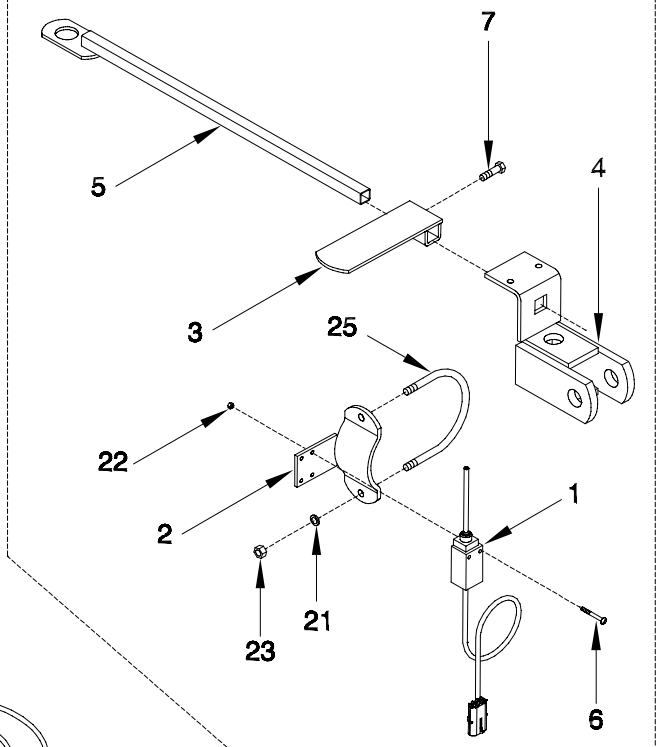

CONCEPT 2000

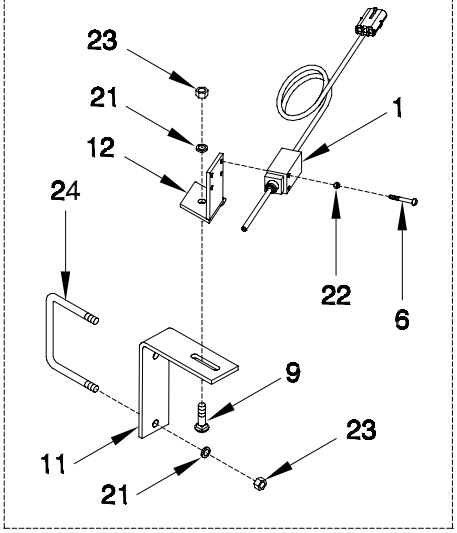

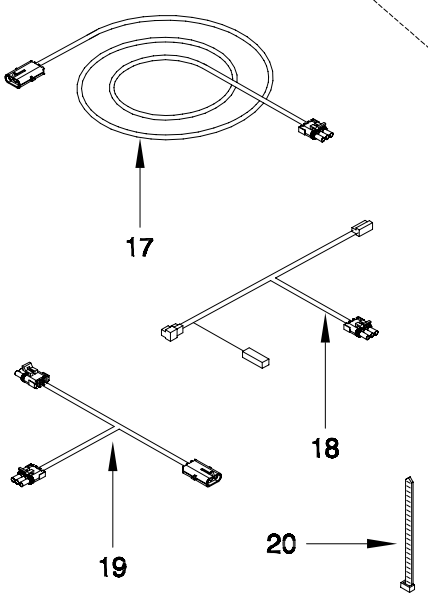

NEVER PIN

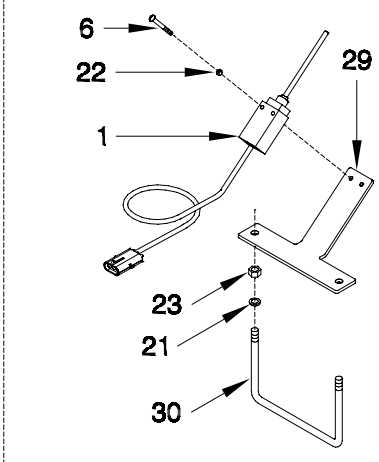

Optional - Remote Clutch Switch - Tillage

Item	Part No.	Description	Qty
		MAGNUM III - Order Kits Through Wholegoods ONLY	
1	N32481	Work Switch & Wire - Weather Pak End	1
2	N32104	Switch Bracket - Magnum III	1
3	N32110	Activator Arm - Magnum III	1
4	C29572	Left Knuckle Joint - Magnum III 43 and 50 ONLY	1
5	C29579	Depth Stop Rod - Magnum III 43 and 50 ONLY	1
6	N32101	Stove Bolt - 3/16 x 1 1/2 Lg	2
7	W-867	Bolt - 3/8 x 3/4 Lg	1
17	N32457	Wire - Clutch Extension (Main) - 37 1/2 ft - Weather Pak Ends	1
18	N32483	Connector - 'Y' Wire - Tow Between ONLY - Weather Pak Ends	1
19	N32482	Connector - 'Y' Wire - Tow Behind ONLY - Weather Pak Ends	1
20	S13336	Tie Strap	6
21	W-523	Lockwasher - 3/8	2
22	N32102	Nut - 3/16	2
23	W-514	Nut - 3/8	2
25	C31374	U-Bolt - 3/8 x 4 1/2 x 12 1/2	1
	N32781	Kit Work Switch Mag III 25, 31 & 40 - Tow Between (Includes Above Items except 4, 5 &19)	
	N32786	Kit Work Switch Mag III 25, 31 & 40 - Tow Behind (Includes Above Items except 4, 5 &18)	
	N32776	Kit Work Switch Mag III 43 & 50 - Tow Between (Includes Above Items except 19)	
	N32785	Kit Work Switch Mag III 43 & 50 - Tow Behind (Includes Above Items except 18)	
		CONCEPT 2000 - Order Kits Through Wholegoods ONLY	
1	N32481	Work Switch & Wire - Weather Pak End	1
6	N32101	Stove Bolt - 3/16 x 1 1/2 Lg	2
9	P7C616	Carriage Bolt - 3/8 x 1 Lg	1
11	N32062	Mounting Bracket Angle	1
12	N40472	Switch Bracket - Work Switch	1
17	N32457	Wire - Clutch Extension (Main) - 37 1/2 ft - Weather Pak Ends	1
18	N32483	Connector - 'Y' Wire - Tow Between ONLY - Weather Pak Ends	1
19	N32482	Connector - 'Y' Wire - Tow Behind ONLY - Weather Pak Ends	1
20	S13336	Tie Strap	2
21	W-523	Lockwasher - 3/8	3
22	N32102	Nut - 3/16	2
23	W-514	Nut - 3/8	3
24	N15098	U-Bolt - 3/8 x 4 x 5	1
	N32772	Kit Work Switch Concept - Tow Between (Includes Above Items except 19)	
	N32782	Kit Work Switch Concept - Tow Behind (Includes Above Items except 17 &18)	
		8900/9000 & MAXIM AIR DRILL FRONT MOUNT - Order Kits Through Wholegoods ONLY	
1	N32481	Work Switch & Wire - Weather Pak End	1
6	N32101	Stove Bolt - 3/16 x 1 1/2 Lg	2
8	C-1550	Bolt - 3/8 x 4 Lg	2
14	N32106	Mounting Plate	1
15	N32105	Switch Bracket - 8900/9000	1
16	N32107	Activator Arm - 8900/9000	1
17	N32457	Wire - Clutch Extension (Main) - 37 1/2 ft - Weather Pak Ends	1
18	N32483	Connector - 'Y' Wire - Tow Between ONLY - Weather Pak Ends	1
19	N32482	Connector - 'Y' Wire - Tow Behind ONLY - Weather Pak Ends	1
20	S13336	Tie Strap	6
21	W-523	Lockwasher - 3/8	2
22	N32102	Nut - 3/16	2
23	W-514	Nut - 3/8	2
26	W-497	Hex Bolt - 5/8 x 1 1/2 25 - 31 and 31 - 41 ONLY	2
27	W-526	Lock Washer - 5/8 25 - 31 and 31 - 41 ONLY	2
28	W-517	Nut - 5/8 25 - 31 and 31 - 41 ONLY	2
	N32775	Kit Work Switch 8900/9000 - Tow Between (Includes Above Items except 19)	
	N32774	Kit Work Switch 8900/9000 - Tow Behind (Includes Above Items except 18)	
		Never Pin - Order Kits Through Wholegoods ONLY	
1	N32481	Work Switch & Wire - Weather Pak End	1
6	N32101	Stove Bolt - 3/16 x 1 1/2 Lg	2
17	N32457	Wire - Clutch Extension (Main) - 37 1/2 ft - Weather Pak Ends	1
18	N32483	Connector - 'Y' Wire - Tow Between ONLY - Weather Pak Ends	1
19	N32482	Connector - 'Y' Wire - Tow Behind ONLY - Weather Pak Ends	1
20	S13336	Tie Strap	6
21	W-523	Lockwasher - 3/8	2
22	N32102	Nut - 3/16	2
23	W-514	Nut - 3/8	2
29	N34731	Bracket - Work Switch - Never Pin	1
30	H10592	U-Bolt - 3/8 x 6 x 5	1
	N35620	Kit Work Switch Never Pin - Tow Between (Includes Above Items except 19)	
	N35619	Kit Work Switch Never Pin - Tow Behind (Includes Above Items except 18)	

Remote Clutch Switch - Optional
Maxim III

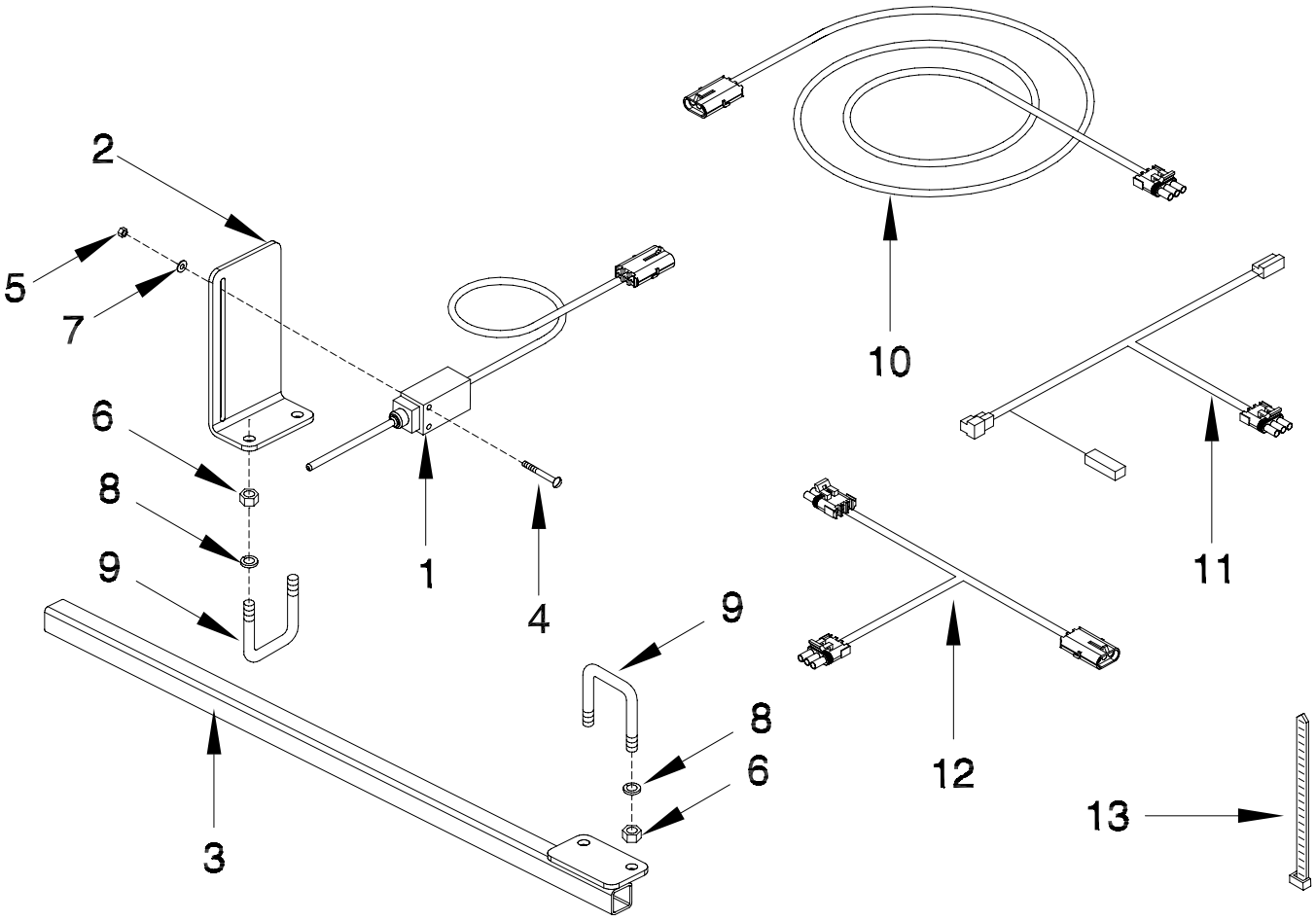

Item	Part No.	Description	Qty
1	N32481	Work Switch & Wire - Weather Pak End	1
2	S39949	Bracket Mount - Work Switch - Maxim III	1
3	S39948	Bracket Actuator - Work Switch - Maxim III	1
4	N32101	Stove Bolt - 3/16 x 1 1/2 Lg	2
5	N32102	Nut - 3/16	2
6	W-514	Hex Bolt - 3/8	4
7	S39549	Flatwasher - 3/16	2
8	W-523	Lockwasher - 3/8	4
9	N15097	U-Bolt - 3/8 x 2 x 5	2
10	N32457	Wire - Clutch Extension (Main) - 37 1/2 ft - Weather Pak Ends	1
11	N32483	Connector - 'Y' Wire - Tow Between ONLY - Weather Pak Ends	1
12	N32482	Connector - 'Y' Wire - Tow Behind ONLY - Weather Pak Ends	1
13	S13336	Tie Strap	6
		Order Kits through Wholegoods Only	
	N41221	Kit Work Switch Maxim III - Tow Between (Includes Above Items except 12)	
	N41220	Kit Work Switch Maxim III - Tow Behind (Includes Above Items except 11)	

Remote Clutch Switch - Optional
C2 Contour and RAZR

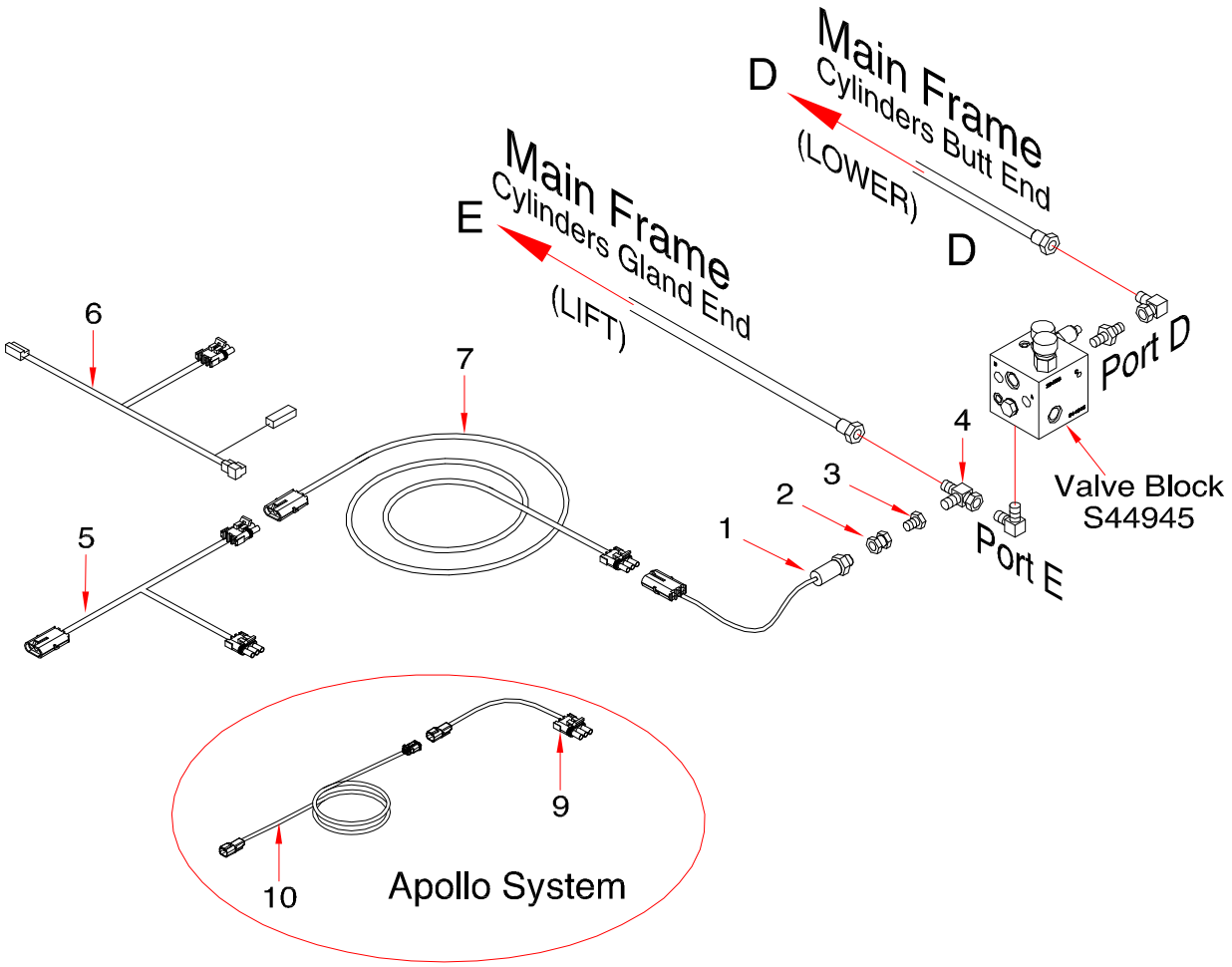

Item	Part No.	Description	Qty
		Ground Drive and Base X20 and X30 Systems	
1	S56558	Pressure Switch	1
2	S42998	Connector - 1/4 FNPT x 9/16-18 FJIC	1
3	F10384	Connector - 9/16-18 MJIC x 7/8-14 FJIC	1
4	H18746	Tee - Swivel - (2) 7/8-14 MJIC x (1) 7/8-14 FJIC	1
5	N32482	Connector - 'Y' Wire - Tow Behind ONLY - Weather Pak Ends	1
6	N32483	Connector - 'Y' Wire - Tow Between ONLY - Weather Pak Ends	1
7	N32457	Wire - Clutch Extension (Main) - 37 1/2 ft - Weather Pak Ends	1
8	S13336	Tie Strap	4
	S54297	Tow Between - Work Switch Kit (Includes Items 1, 2, 3, 4, 6, 7, and 8)	
	S54298	Tow Behind - Work Switch Kit (Includes Items 1, 2, 3, 4, 5, 7, and 8)	
		Apollo System - 2016	
1	S56558	Pressure Switch	1
2	S42998	Connector - 1/4 FNPT x 9/16-18 FJIC	1
3	F10384	Connector - 9/16-18 MJIC x 7/8-14 FJIC	1
4	H18746	Tee - Swivel - (2) 7/8-14 MJIC x (1) 7/8-14 FJIC	1
9	N60323	Harness Adaptor - Pressure Work Switch - 5m - 1015894-01	1
10	N59010	Harness - Work Switch - 5 m - AGA4468	1

Digi-Star Weigh Scale
Tow Between

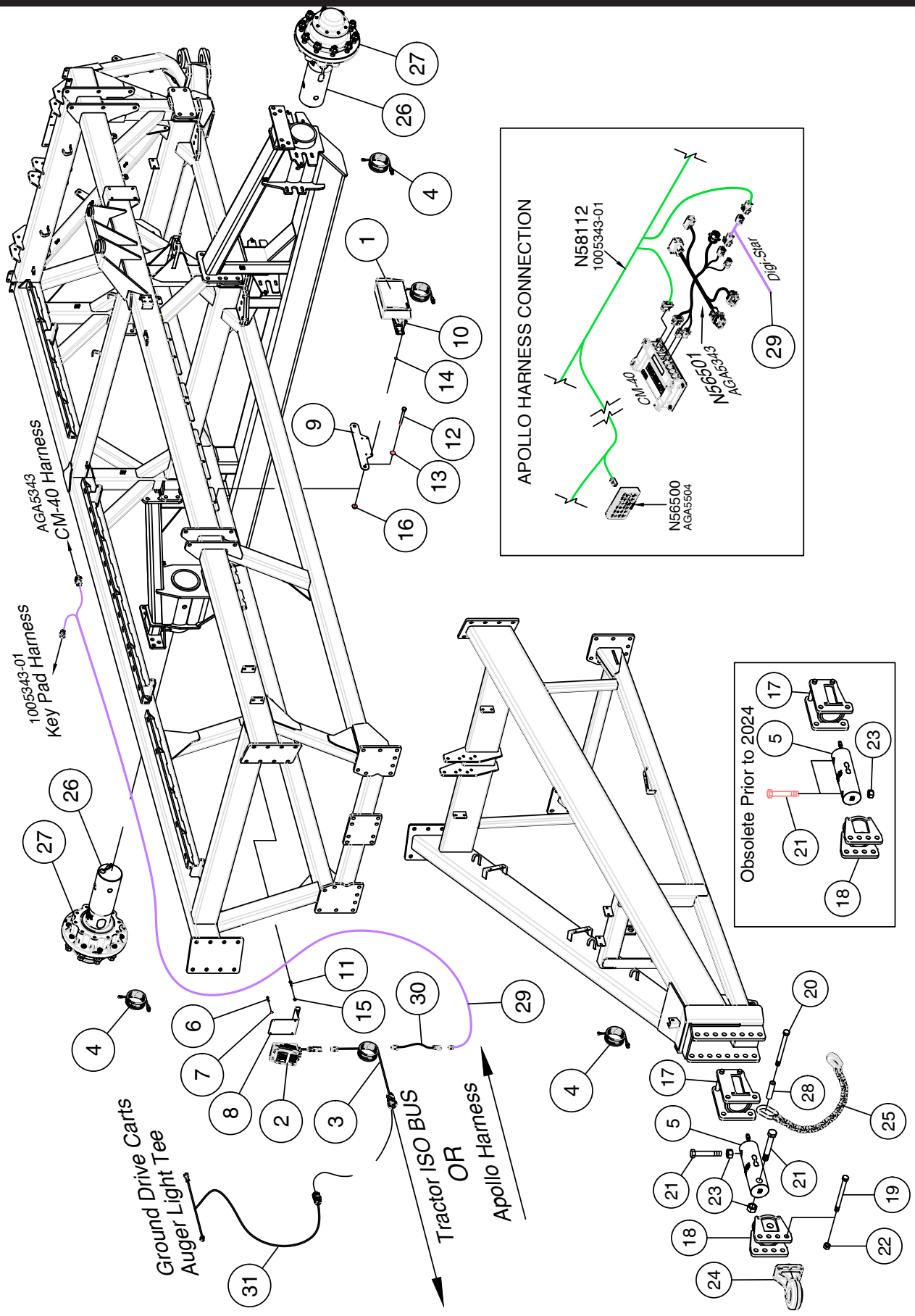

Digi-Star Weigh Scale - Tow Between

Item	Part No.	Description	Qty
1	N74140	Remote Display - Digi-Star	1
	N53369	Remote Display - Digi-Star - Obsolete	
2	N72111	Kit - Digi-Star -SL2110	1
	N53366	Kit - Digi-Star - SL110 ISO DT6 - 407747 - Obsolete	
3	N53367	Harness - Implement - 407780 (Connects to Tractor ISO BUS)	1
4	N53368	Harness -EZ Mate Cable - Digi-Star - 21 ft- 404900	3
5	N73327	Load Cell -2024 to Present	1
	N53775	Load Cell - Obsolete - To use N73327, Bracket N53780 needs replacing with new hole orientation.	
6	N34961	Screw - #10-24 x 3/4 Lg - Machine	4
7	N37787	Locknut - #10-24 Nylon Insert	4
8	N53481	Plate - Display Mount - Digi-Star	1
9	N53482	Plate - Display Mount - Digi-Star	1
10	W-470	Hex Bolt - 1/4 x 1 1/4 Lg	4
11	W-471	Hex Bolt - 5/16 x 1 Lg	2
12	W-496	Hex Bolt - 1/2 x 5 1/2 Lg	2
13	S-1925	Washer - 0.531 ID x 1.062 OD x 13 Ga	2
14	D-5277	Locknut - 1/4 Flanged Serrated	4
15	D-5278	Locknut - 5/16 Flanged Serrated	2
16	D14565	Locknut - 1/2 Flanged Serrated	2
17	N53740	Bracket - Load Cell - Tow Between - Cart Side	1
18	N53780	Bracket - Load Cell - Tow Between - Clevis Side	1
19	C18597	Hex Bolt - 1 x 8 Lg	3
20	K53438	Hex Bolt - 1 x 11 Lg GR.8	3
21	S44715	Hex Bolt - 1 1/4 x 8 Lg	2
22	D-5274	Locknut - 1 Unitorque	3
23	S39780	Locknut - 1 1/4	2
24	N37041	Hitch Clevis - CAT 4 - 9445, 9550 and 9650	1
	N49675	Hitch Clevis - CAT 5 - 9800 and 91000 (Optional 9445, 9550 and 9650)	
25	N44710	Chain Safety Ag - 80,000 Lb	1
26	N53364	Spindle - 6 Diameter **- 30,000 lbs** - DIGI-STAR - 9445, 9550 and 9650 Rear	2
	N55240	Spindle - 6 Diameter **- 35,000 lbs** - DIGI-STAR - 9800 and 91000 Rear	
27	N53665	DIGI-STAR Hub & Spindle Assembly **- 30,000 lbs** - 9445, 9550 and 9650 Rear - Duals	2
	N60395	DIGI-STAR Hub & Spindle Assembly **- 30,000 lbs** - 9445, 9550 and 9650 Rear-**Singles**	
	N55235	DIGI-STAR Hub & Spindle Assembly **- 35,000 lbs** - 9800 and 91000 Rear - Duals	
28	N64746	Spacer - 1.02 ID x 1 1/2 OD x 6 1/2 Lg	1
		Apollo System - 2016	
29	N60570	Harness - Apollo to Digi-Star - 1011972-01	1
30	N60571	Harness Adapter - Apollo to Digi-Star - 1011971-01	1
		Ground Drive Units	
31	N60755	Power Cable	1

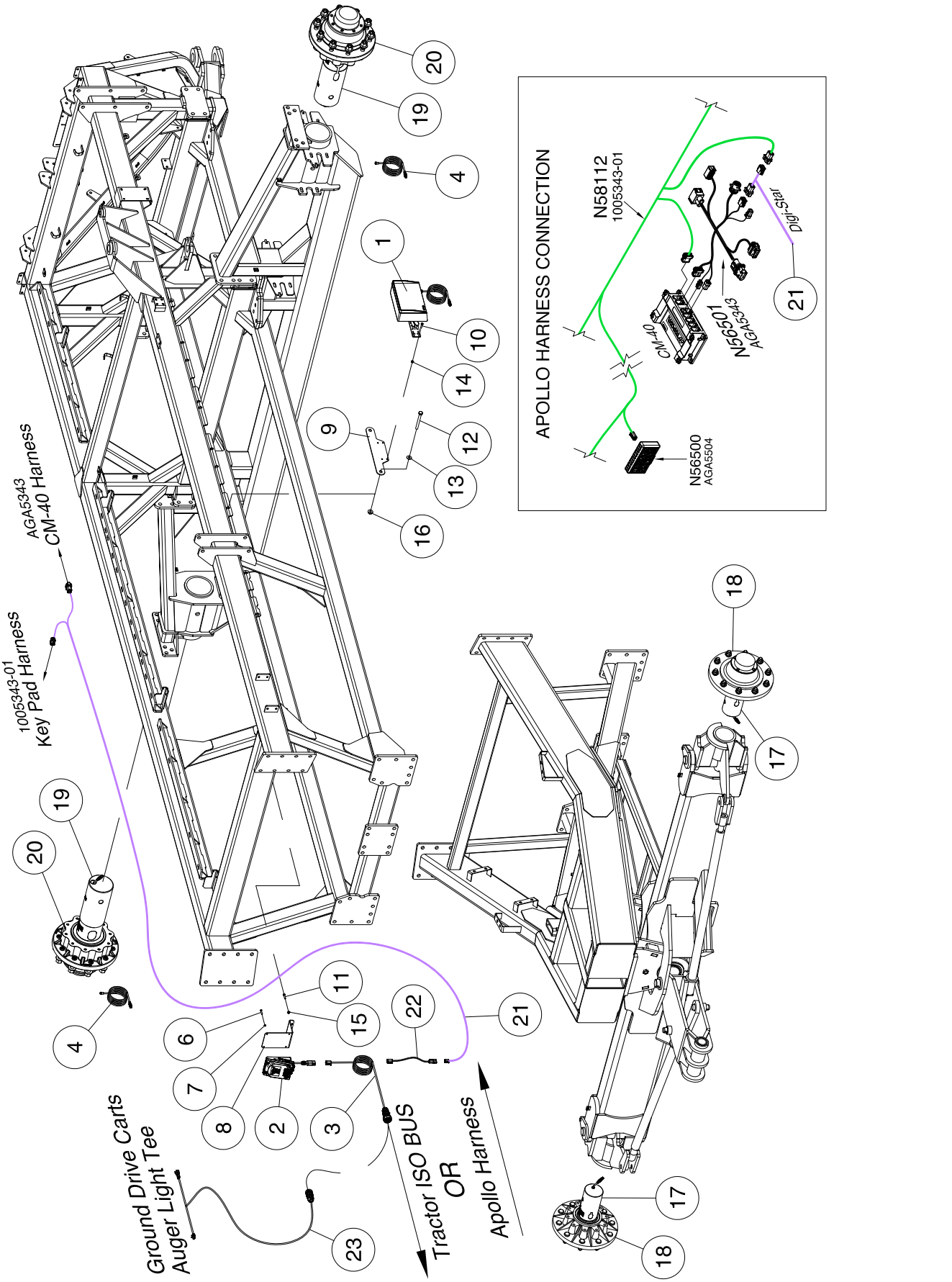
APOLLO HARNESS CONNECTION
N58112
1005343-01
N56501
AGA5343
CM-40
Digi-Star
N56500
AGA5504
AGA5343
CM-40 Harness
1005343-01
Key Pad Harness
Ground Drive Carts
Auger Light Tee
Tractor ISO BUS
OR
Apollo Harness
1
2
3
4
6
7
8
9
10
11
12
13
14
15
16
17
18
19
20
21
22
23

Digi-Star Weigh Scale - Tow Behind

Item	Part No.	Description	Qty
1	N74140	Remote Display - Digi-Star	1
	N53369	Remote Display - Digi-Star - Obsolete	
2	N72111	Kit - Digi-Star -SL2110	1
	N53366	Kit - Digi-Star - SL110 ISO DT6 - 407747 - Obsolete	
3	N53367	Harness - Implement - 407780 (Connects to Tractor ISO BUS)	1
4	N53368	Harness -EZ Mate Cable - Digi-Star - 21 ft- 404900	2
5	N53365	Implement Harness - 25 ft - 408100	1
6	N34961	Screw - #10-24 x 3/4 Lg - Machine	4
7	N37787	Locknut - #10-24 Nylon Insert	4
8	N53481	Plate - Display Mount - Digi-Star	1
9	N53482	Plate - Display Mount - Digi-Star	1
10	W-470	Hex Bolt - 1/4 x 1 1/4 Lg	4
11	W-471	Hex Bolt - 5/16 x 1 Lg	2
12	W-496	Hex Bolt - 1/2 x 5 1/2 Lg	2
13	S-1925	Washer - 0.531 ID x 1.062 OD x 13 Ga	2
14	D-5277	Locknut - 1/4 Flanged Serrated	4
15	D-5278	Locknut - 5/16 Flanged Serrated	2
16	D14565	Locknut - 1/2 Flanged Serrated	2
17	N55145	Spindle - DIGI-STAR - 9445, 9550 and 9650 Front	2
	N53363	Spindle - DIGI-STAR- 9800 and 91000 Front	
18	N53879	DIGI-STAR Hub & Spindle Assembly - 9445, 9550 and 9650 Front	2
	N55234	DIGI-STAR Hub & Spindle Assembly- 9800 and 91000 Front	
19	N53364	Spindle - 6 Diameter **- 30,000 lbs** - DIGI-STAR - 9445, 9550 and 9650 Rear	2
	N55240	Spindle - 6 Diameter **- 35,000 lbs** - DIGI-STAR - 9800 and 91000 Rear	
20	N53665	DIGI-STAR Hub & Spindle Assembly **- 30,000 lbs** - 9445, 9550 and 9650 Rear - Duals	2
	N60395	DIGI-STAR Hub & Spindle Assembly **- 30,000 lbs** - 9445, 9550 and 9650 Rear-**Singles**	
	N55235	DIGI-STAR Hub & Spindle Assembly **- 35,000 lbs** - 9800 and 91000 Rear - Duals	
		Apollo System - 2016	
21	N60570	Harness - Apollo to Digi-Star - 1011972-01	1
22	N60571	Harness Adapter - Apollo to Digi-Star - 1011971-01	1
		Ground Drive Units	
23	N60755	Power Cable	1



1 - A3745 Morris X20 Console

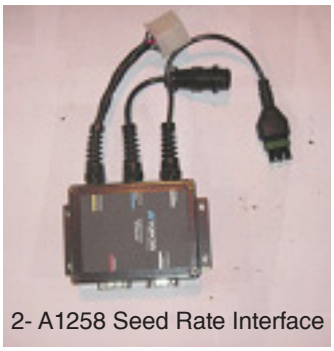

2- A1258 Seed Rate Interface



3 - MDECU



4 - A1771 Run-Reset Box
33 - Mount Bracket
34 - Screw #10



5 - A1734 Comms Cable

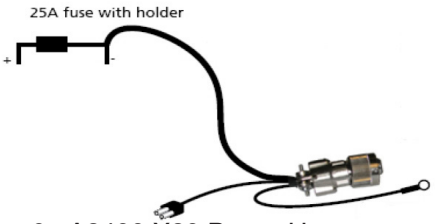

6 - A2400 X20 Power Harness



7 - A2615 X20 Ram Mount Angle Kit



10 - A3695 Sensor Harness



11 - A3737 4 Bin Drive Harness



13 - A3739 Limp Home Harness



15 - A464 Tractor Harness



16 - A467 Implement Extension



17- A468 Chassis Extension Harness
17A - A3738 Chassis Extension Harness

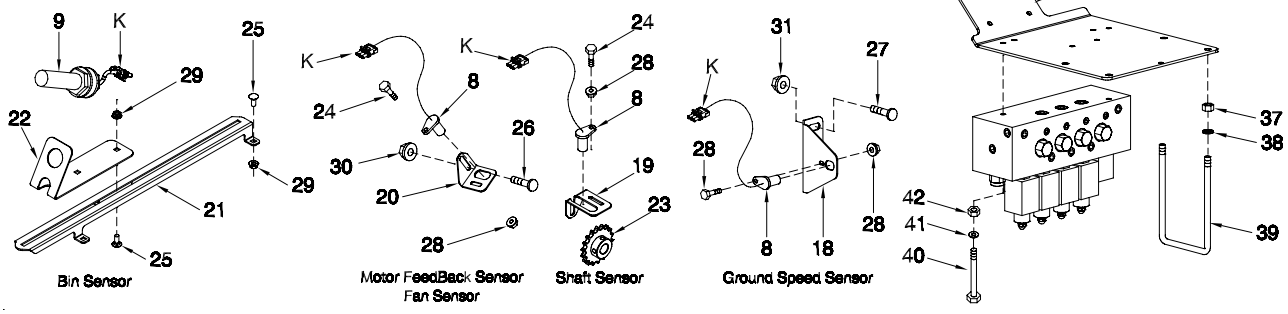

X20 - TopCon System

Item	Part No.	Description	No: Used 2Tank	3Tank	4Tank
1	A3745	Morris X20 Console	1	1	1
	A2678	X20 Seed Rate Operation Manual			
2	A1258	Zynx Seedrate / Spreader Interface	1	1	1
3	N50622	AGA3980 Multidrive Electronic Control Unit (MDECU) 4 Channel	1	1	1
4	A1771	Run / Stop / Reset Switch Box	1	1	1
5	A1734	Comms Cable Shielded 5M (16Ft) 9 Wire Male “D” To 9 Wire Female “D”	1	1	1
6	A2400	X20 Power Harness	1	1	1
7	A2615	X20 Ram Mount Angle Kit	1	1	1
8	A3680	Honeywell Proximity Sensor To Suit Morris	3	4	5
9	A3681	Bin Level Sensor To Suit Morris No Bracket	2	3	4
10	A3695	Morris 8000 Series 4 Bin Sensor Harness	1	1	1
11	A3737	Morris Canada 4 Bin Drive Harness	1	1	1
12	A1901	Serial GPS / VRC Comms Harness 0.3M (1Ft)	1	1	1
13	A3739	Morris Canada Limp Home Adaptor Harness	1	1	1
15	A464	Actuator/Hydraulic Tractor Harness Suit Zynx and Seedrate Controller	1	1	1
16	N49165	A467 Actuator/Hydraulic Implement Extension Harness 12.5M (41Ft) With Lights	1	1	1
17	A468	Actuator/Hydraulic Chassis Extension Harness 10M (32.5Ft) With Lights (9365, 9450 & 9535)	1	1	-
17A	A3738	Actuator/Hydraulic Chassis Extension Harness 12M (39.5Ft) With Lights (9445, 9550 & 9650)	1	1	1
18	N37330	Bracket - Sensor - 9365 to 9650	1	1	1
	N53664	Ground Speed Sensor Bracket - 9800			
19	N45199	Bracket - Shaft Sensor - Metershaft	2	3	4
20	N29296	Bracket - Sensor	3	4	5
21	N40899	Adjustment Plate - Cart tanks	2	3	-
22	N34799	Bracket - Bin Level Sensor	2	3	4
23	N45198	Sprocket - 40B18 - 3/4 Diameter Bore	2	3	4
24	W-469	Hex Bolt - 1/4 x 3/4 Lg	10	12	14
25	D-5259	Carriage Bolt - 5/16 x 3/4 Lg	4	6	8
26	D-5260	Carriage Bolt - 3/8 x 1 1/4 Lg	3	4	5
27	D-5265	Carriage Bolt - 1/2 x 1 Lg	2	3	4
28	D-5277	Locknut - 1/4 - Serrated	10	12	14
29	D-5278	Locknut - 5/16 - Serrated	4	6	8
30	D-5279	Locknut - 3/8 - Serrated	3	4	5
31	D14565	Locknut - 1/2 - Serrated	2	2	2
32	N45530	Shaft -Slow Speed - TOPCON VRT - 72 Tooth Feedback Wheel	2	3	4
33	N48009	Mounting Bracket - Run-Reset Box	1	1	1
34	N29696	Screw - #10 X 3/4 HEX SELF TAP	4	4	4
35	S27987	Locknut - 3/8 -16 Flange Centre Lock	2	2	2
36	W-475	Hex Bolt - 3/8 X 1 Lg	2	2	2
37	W-514	Hex Nut - 3/8	4	4	4
38	W-523	Lockwasher - 3/8	4	4	4
39	N36019	U-Bolt - 3/8 x 4 x 10 15/16 - (9365, 9450 & 9535)	2	2	2
	N19723	U-Bolt - 3/8 x 4 x 6 15/16 - (9445, 9550 & 9650)	2	2	2
40	W-1847	Hex Bolt - 1/4 x 5 Lg	2	2	2
41	W-521	Lockwasher - 1/4	2	2	2
42	W-512	Hex Nut - 1/4	2	2	2
43	N51548	Mounting Plate - Manifold (Not as Shown)	1	1	1
44	N48044	Switch Box - X20 Monitor Override (Not Shown)			
	A1705	Stylus (Not Shown)			
H	N29384	Packard Connector - BLACK - 2 Pin Plug			
I	N29385	Packard Connector - BLACK - 2 Pin Socket			
J	N27613	Packard Connector - BLACK - 3 Pin Plug			
K	N27614	Packard Connector - BLACK - 3 Pin Socket			
L	N29152	Packard Connector - BLACK - 4 Pin Socket			
M	N29153	Seal Connector - Black - BLACK - 4 Pin			
		Blockage Module Kits and Replacement Parts on Next Page			

Variable Rate System - TopCon System

Item	Part No.	Description	No: Used 2Tank	3Tank	4Tank
	N47400	Blocked Head ECU - A2021 - TOPCON (Not Shown)			
		A3540 Blocked Head Monitor Operators Manual			
	N47423	Blocked Head Sensor - A1961 - TOPCON (Not Shown)			
	N47424	Fan Pressure Sensor - A267 - TOPCON (Not Shown)			
	N47425	Seeder Interface Switch Box - A1267 - TOPCON (Not Shown)			
	N47426	Harness - 5th Tank Mini ECU - 0.5M - A2251 - TOPCON (Not Shown)			
	N47427	Harness - Mini ECU - A2189 - TOPCON (Not Shown)			
	N47428	Liquid System Loom - A1978 - TOPCON (Not Shown)			
	N47429	Extension Harness - 17.5M - A1839 - TOPCON (Not Shown)			
	N47430	Adapter Harness - NH3 ZYNX - A1833 - TOPCON (Not Shown)			
	N47431	Adapter Harness - NH3 Dicky John - A2327 - TOPCON (Not Shown)			
	N47432	Adapter Harness - NH3 Micro Trak - A2032 - TOPCON (Not Shown)			
	N47433	Adapter Harness - Liquid Fertilizer - A1581 - TOPCON (Not Shown)			
	N47434	Extension Harness - 1M - A1121 - TOPCON (Not Shown)			
	N47435	Extension Harness - 3M - A2017 - TOPCON (Not Shown)			
	N47436	Extension Harness - 9M - A2018 - TOPCON (Not Shown)			
	N47437	Kit:5th Tank UNI LIQUID - A3757 - TOPCON (Not Shown)			
	N47438	30S Sprayer ECU - AGA4059 - TOPCON (Not Shown)			
	N47439	Extension Harness - 13M - AGA4055 - TOPCON (Not Shown)			
	N47442	Adapter Harness - 1.5M - AGA4057 - TOPCON (Not Shown)			
	N47443	Tool Kit - AGA4054 - TOPCON (Not Shown)			
	N47444	Crimp Tool - U087 - TOPCON (Not Shown)			
	N47445	Kit:Sectional Liquid Control - AGA4056 - TOPCON (Not Shown)			
	N47446	AMP CPC Extraction Tool - U005 - TOPCON (Not Shown)			
	N47447	9 Pin AMP Plug Pack - A1475 - TOPCON (Not Shown)			
	N47448	16 Pin AMP Plug Pack -A1477 - TOPCON (Not Shown)			
	N47449	Extension Harness - 7.5M - A2671 - TOPCON (Not Shown)			
	N47451	Extension Harness - 12M - A2428 - TOPCON (Not Shown)			
	N47452	Extension Harness - 1M - 18 sensors - AGA4277 - TOPCON (Not Shown)			
	N47453	Extension Harness - 7.5M - A2669 - TOPCON (Not Shown)			
	N47438	Control - Sectional ECU - AGA4059 - TOPCON (Not Shown)			
	N48000	X20 AGCAM Interface Kit - AGA4076 (Not Shown)			
		A3275 AGCAM Operations/Installation Manual			
	N48001	X20 AGCAM Interface - A3358 (Not Shown)			
	N48002	X20 AGCAM Power Harness - A3360 (Not Shown)			
	N48003	X20 AGCAM USB Cable - A3366 (Not Shown)			
	N48004	X20 Power Adapter Harness - A1953 (Not Shown)			
	N48005	X20 AGCAM Camera - DMAC-RC-PAL (Not Shown)			
	N48006	X20 AGCAM Cable 20' - DMAC-EC20 (Not Shown)			
	N48007	X20 AGCAM Cable 60' - DMAC-EC60 (Not Shown)			
	N48008	X20 AGCAM Cable 6' - DMAC-ACA6 (Not Shown)			
	N48010	X20 AGCAM Camera w/Cable - DNCA-C1-PAL (Not Shown)			
	N48011	Adapter Harness - X20 Speaker Audio Harness - H1173 (Not Shown)			
	N48012	External Speaker - X20 - A1229 (Not Shown)			
	N48013	Mini USB Keyboard - X20 - A2665 (Not Shown)			
	N48014	Ram Mount Adapter - RAM-233 (Shown in item 7)			
	N48016	Ram Mount Base - RAM-202U (Shown in item 7)			
	K45686	Ram Mounting Arm - RAM-201U (Shown in item 7)			
	N48035	Mounting Plate - For N47438 Sectional ECU			
	N48036	Cover Plate - For N47438 Sectional ECU			

Variable Rate System
EAGLE - TopCon System



1 - A3815 Eagle Console



2 - MDECU



3 - A1771 Run-Reset Box



4 - A1779 Adapter Harness



5 - A464 Tractor Harness



6 - A467 Implement Extension



7 - A468 Chassis Extension Harness
7A - A3738 Chassis Extension Harness



10 - A3695 Sensor Harness



11 - A3737 4 Bin Drive Harness



12 - A3739 Limp Home Harness

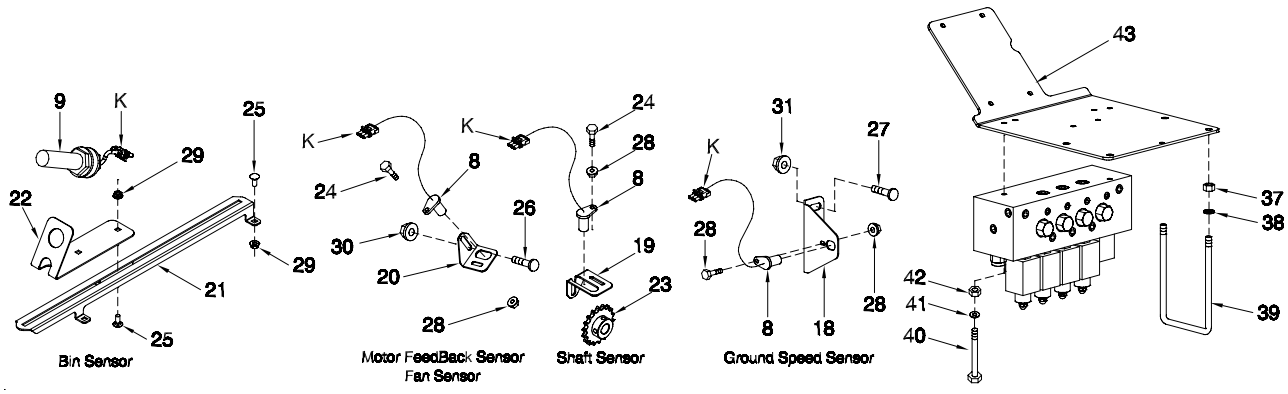

EAGLE - TopCon System

Item	Part No.	Description	No: Used 2Tank	3Tank	4Tank
1	N49188	Monitor Head - TOPCON EAGLE - A3815	1	1	1
2	A1526	Multidrive Electronic Control Unit (MDECU) 4 Channel	1	1	1
3	A1771	Run / Stop / Reset Switch Box	1	1	1
4	N49189	Adapter Harness - TOPCON EAGLE - A1779	1	1	1
5	A464	Actuator/Hydraulic Tractor Harness Suit Zynx And Seedrate Controller	1	1	1
6	A467	Actuator/Hydraulic Implement Extension Harness 12.5M (41Ft) With Lights	1	1	1
7	A468	Actuator/Hydraulic Chassis Extension Harness 10M (32.5Ft) With Lights (9365, 9450 & 9535)	1	1	-
7A	A3738	Actuator/Hydraulic Chassis Extension Harness 12M (39.5Ft) With Lights (9445, 9550 & 9650)	1	1	1
8	A3680	Honeywell Proximity Sensor To Suit Morris	3	4	5
9	A3681	Bin Level Sensor To Suit Morris No Bracket	2	3	4
10	A3695	Morris 8000 Series 4 Bin Sensor Harness	1	1	1
11	A3737	Morris Canada 4 Bin Drive Harness	1	1	1
12	A3739	Morris Canada Limp Home Adaptor Harness	1	1	1
18	N37330	Bracket - Sensor - Used with 32 Dia Rims	1	1	1
19	N45199	Bracket - Shaft Sensor - Metershaft	2	3	4
20	N29296	Bracket - Sensor	3	4	5
21	N40899	Adjustment Plate - Cart tanks	2	3	-
22	N34799	Bracket - Bin Level Sensor	2	3	4
23	N45198	Sprocket - 40B18 - 3/4 Diameter Bore	2	3	4
24	W-469	Hex Bolt - 1/4 x 3/4 Lg	10	12	14
25	D-5259	Carriage Bolt - 5/16 x 3/4 Lg	4	6	8
26	D-5260	Carriage Bolt - 3/8 x 1 1/4 Lg	3	4	5
27	D-5265	Carriage Bolt - 1/2 x 1 Lg	2	3	4
28	D-5277	Locknut - 1/4 - Serrated	10	12	14
29	D-5278	Locknut - 5/16 - Serrated	4	6	8
30	D-5279	Locknut - 3/8 - Serrated	3	4	5
31	D14565	Locknut - 1/2 - Serrated	2	2	2
32	N45530	Shaft -Slow Speed - TOPCON VRT - 72 Tooth Feedback Wheel	2	3	4
33	N48009	Mounting Bracket - Run-Reset Box	1	1	1
34	N29696	Screw - #10 X 3/4 HEX SELF TAP	4	4	4
35	S27987	Locknut - 3/8 -16 Flange Centre Lock	2	2	2
36	W-475	Hex Bolt - 3/8 X 1 Lg	2	2	2
37	W-514	Hex Nut - 3/8	4	4	4
38	W-523	Lockwasher - 3/8	4	4	4
39	N36019	U-Bolt - 3/8 x 4 x 10 15/16 - (9365, 9450 & 9535)	2	2	2
	N19723	U-Bolt - 3/8 x 4 x 6 15/16 - (9445, 9550 & 9650)	2	2	2
40	W-1847	Hex Bolt - 1/4 x 5 Lg	2	2	2
41	W-521	Lockwasher - 1/4	2	2	2
42	W-512	Hex Nut - 1/4	2	2	2
43	N51548	Mounting Plate - Manifold (Not as Shown)	1	1	1
H	N29384	Packard Connector - BLACK - 2 Pin Plug			
I	N29385	Packard Connector - BLACK - 2 Pin Socket			
J	N27613	Packard Connector - BLACK - 3 Pin Plug			
K	N27614	Packard Connector - BLACK - 3 Pin Socket			
L	N29152	Packard Connector - BLACK - 4 Pin Socket			
M	N29153	Seal Connector - Black - BLACK - 4 Pin			
		Blockage Module Kits and Replacement Parts on Next Page			

EAGLE - TopCon System

Item	Part No.	Description	No: Used 2Tank	3Tank	4Tank
	N49185	Extension Harness - TOPCON EAGLE - A2667			
	N49186	Extension Harness - TOPCON EAGLE (9M) - A2018			
	N49187	Extension Harness - TOPCON EAGLE (5M) - A768			
	N49168	Blocked Head Kit - EAGLE (Includes N49185, N49186, N49187)			
	N49169	Blocked Head Sensor - EAGLE - Small Hose - AGA4553			

Valve and Control Mount

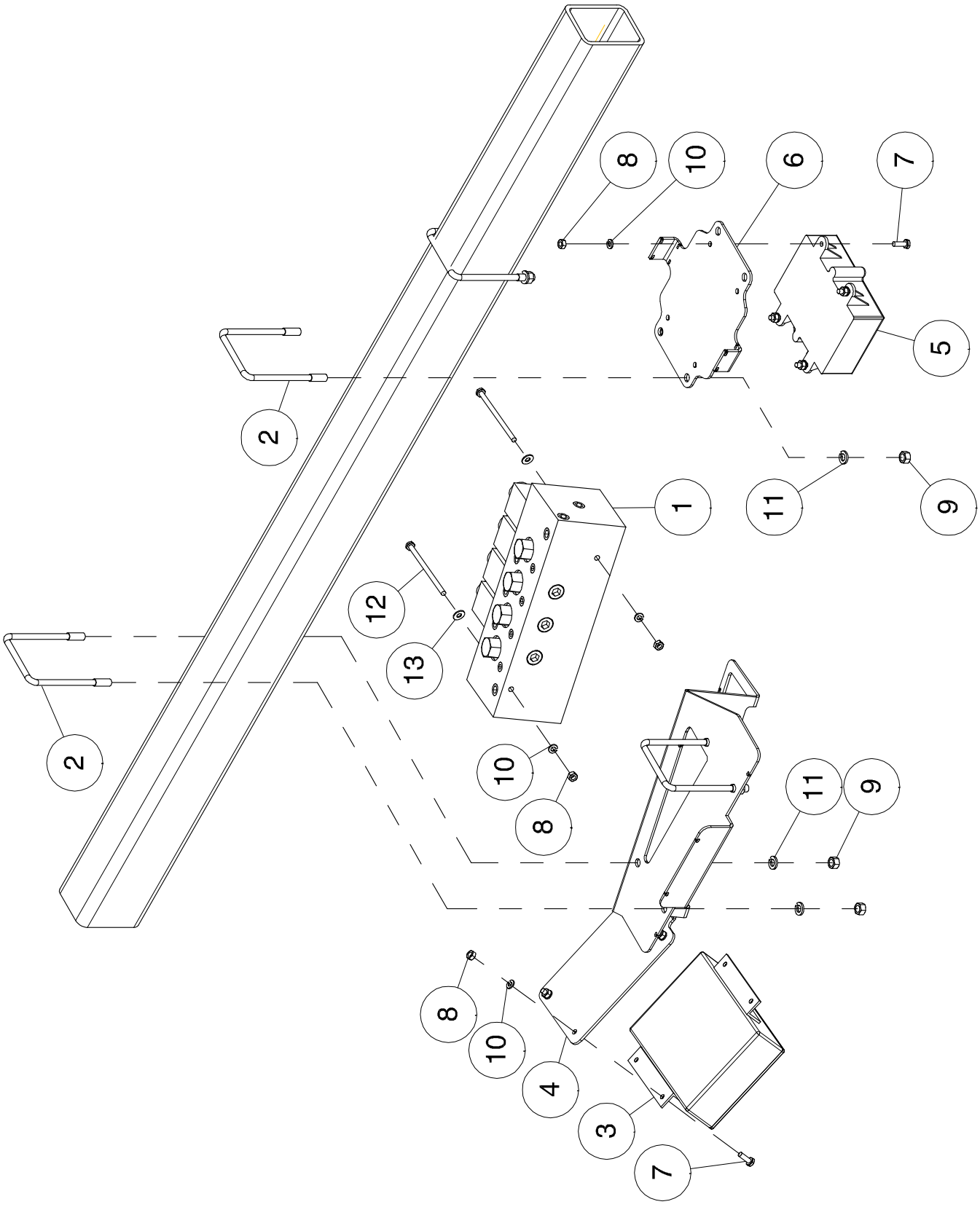

Valve and Control Mount

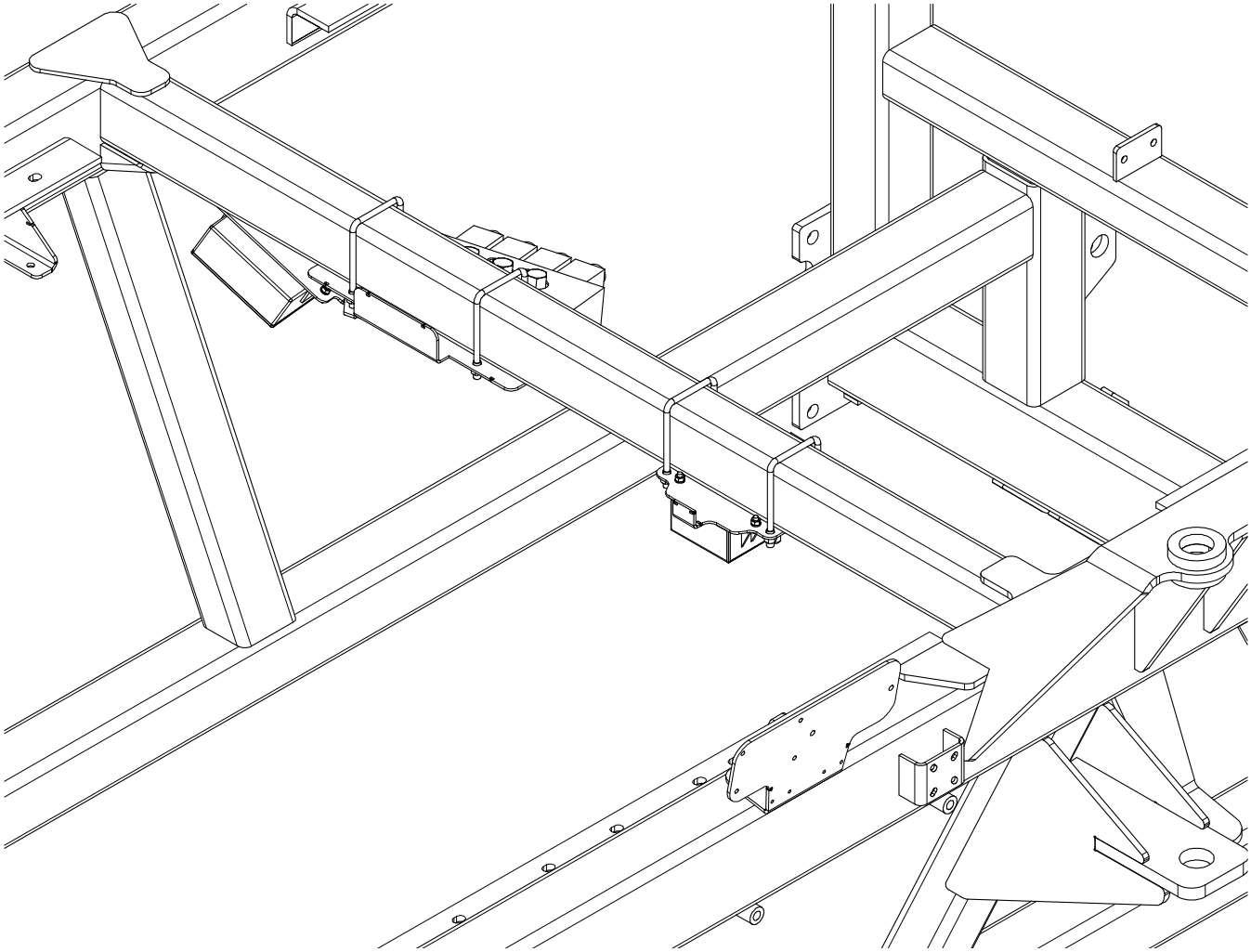

Item	Part No.	Description	Qty
1	N45195	Valve Manifold Assembly	1
2	N49642	U-Bolt - 3/8 x 3-1/16 x 4-15/16 (Prior to 2018)	4
3	N50622	Multi Drive Electronic Control Unit - 4 Channel (AGA3980)	1
4	N51548	Plate - Manifold Mount	1
5	N53020	Control Box - Wireless Auger Remote	1
6	N53023	Plate - Mounting Bracket (Prior to 2018)	1
7	W-469	Hex Head - 1/4 x 3/4 Lg	8
8	W-512	Hex Nut - 1/4	10
9	W-514	Hex Nut - 3/8 (Prior to 2018)	8
10	W-521	Lockwasher - 1/4	10
11	W-523	Lockwasher - 3/8 (Prior to 2018)	8
12	W-1847	Hex Bolt - 1/4 x 5 Lg	2
13	S-1198	Flatwasher - 5/16 ID x 3/4 OD x 1/16	2

Valve and Control Mount Version 2

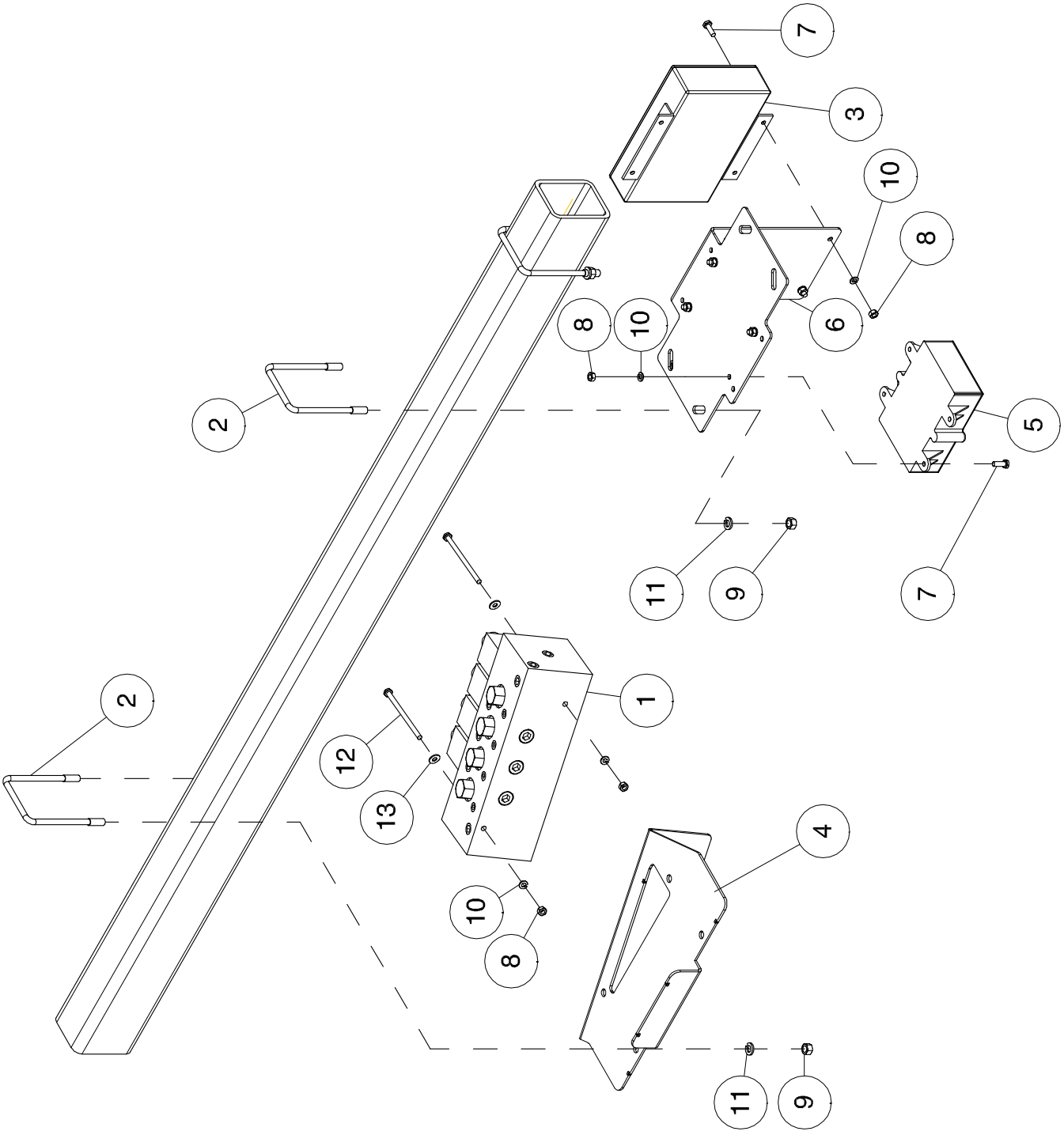

Valve and Control Mount Version 2

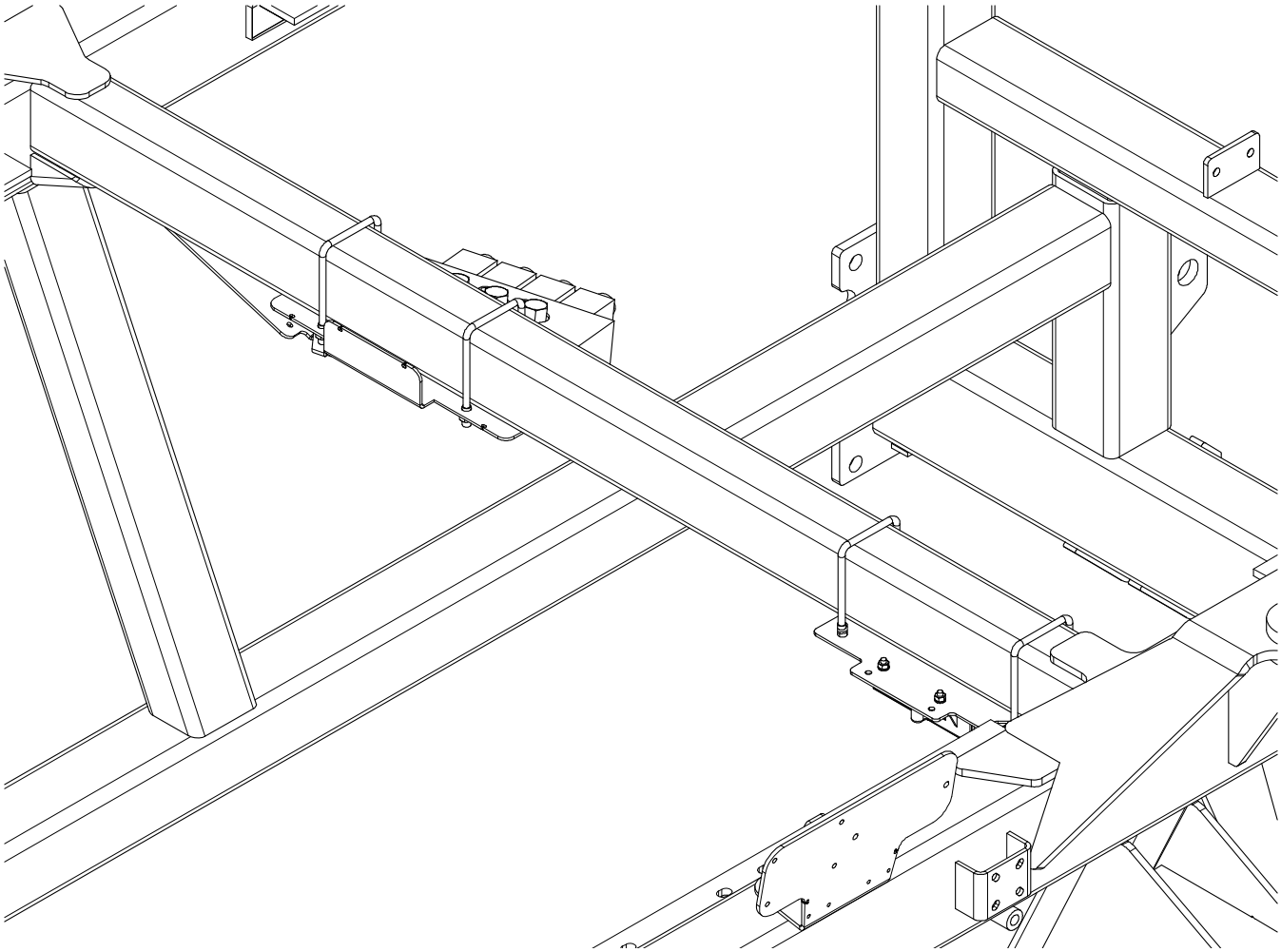

Item	Part No.	Description	Qty
1	N45195	Valve Manifold Assembly	1
2	N49642	U-Bolt - 3/8 x 3 1/16 x 4 15/16 UL - 9365 to 9650	4
	N19723	U-Bolt - 3/8 x 4 1/16 x 6 15/16 UL - 9800 and 91000	4
3	N50622	Multi Drive Electronic Control Unit - 4 Channel (AGA3980)	1
4	N53456	Plate - Manifold Mount	1
5	N53020	Control Box - Wireless Auger Remote	1
6	N53498	Universal ECU Plate	1
7	W-469	Hex Head - 1/4 x 3/4 Lg	8
8	W-512	Hex Nut - 1/4	10
9	W-514	Hex Nut - 3/8	8
10	W-521	Lockwasher - 1/4	10
11	W-523	Lockwasher - 3/8	8
12	W-1847	Hex Bolt - 1/4 x 5 Lg	2
13	S-1198	Flatwasher - 5/16 ID x 3/4 OD x 1/16	2

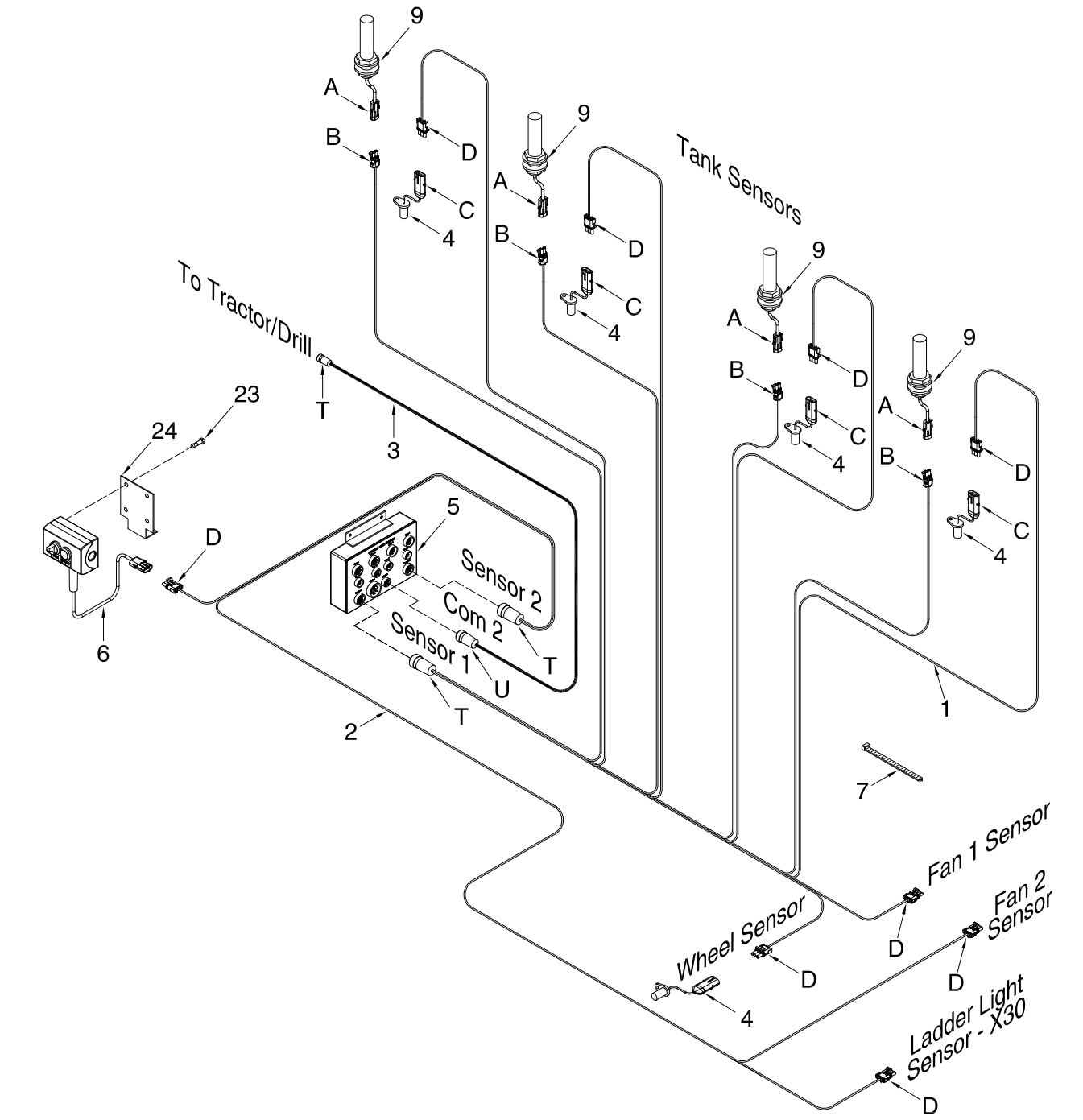

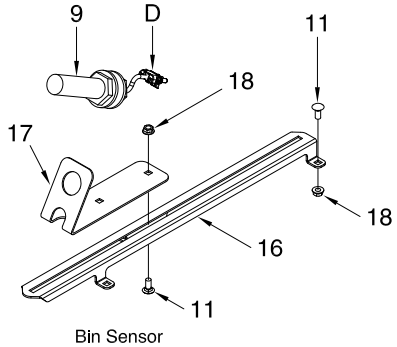

Bin Sensor

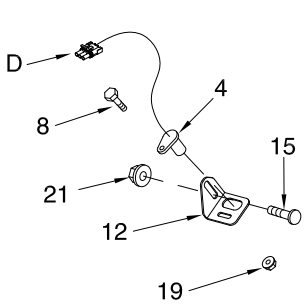

Motor FeedBack Sensor
Fan Sensor

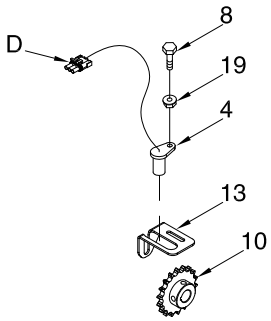

Meter Shaft Sensor

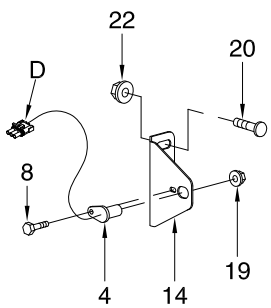

Ground Speed Sensor

X30 with IB-1 Cart Harness

Item	Part No.	Description	Qty
		Quantities listed are for a 4 Tank system	
1	N55004	TopCon 4 Tank Harness (A3695)	1
2	N55007	TopCon Dual Fan Harness (AGA4895)	1
3	N55005	TopCon Actuator Harness (A3738)	1
4	N50070	Sensor - Hall Effect (A3680)	5
5	N50622	Multi Drive Electronic Control Unit - 4 Channel (AGA3980)	1
6	N55009	TopCon - Run/Stop/Reset/ Box (A1771)	1
7	D-4838	Nylon Tie Strap - 14 1/2 Lg (Black)	AsReq
8	W-469	Hex Bolt - 1/4 x 3/4 Lg	9
9	N55011	Bin Level Sensor (A3681)	4
10	N45198	Sprocket - 40B18 - 3/4 Diameter Bore	4
11	D-5259	Carriage Bolt - 5/16 x 3/4 Lg	20
12	N29296	Fan Sensor Bracket	1
13	N45199	Shaft Sensor Bracket	4
14	N37330	Ground Speed Sensor Bracket - 4 5/8 Lg - 9365, 9450 and 9535	1
	N37330	Ground Speed Sensor Bracket - 4 5/8 Lg - 9445, 9550 and 9650 - Prior to 2016	
	N53664	**Ground Speed Sensor Bracket - 6 1/2 Lg -** 9445, 9550 and 9650 - 2016 to Present	
	N53664	**Ground Speed Sensor Bracket - 6 1/2 Lg - 9800 and 91000**	
15	D-5260	Carriage Bolt - 3/8 x 1 1/4 Lg	1
16	N40899	Adjustment Plate	4
17	N34799	Bracket - Bin Level Sensor	4
18	D-5278	Locknut - 5/16 Serrated	20
19	D-5277	Locknut - 1/4 Serrated	6
20	D-5265	Carriage Bolt - 1/2 x 1 Lg	2
21	D-5279	Locknut - 3/8 Serrated	1
22	D14565	Locknut - 1/2 Serrated	2
23	N29696	Screw - #10 x 3/4 Hex Self Tap	4
24	N48009	Mounting Bracket - Run\Reset Box	1
	N45166	Full Monitor Kit (AGA4552) - Contains Items (N55013 & N55014)	
	N55014	4 Tank Seeder Kit - Contains Items (1, 2, 3, 5, 6, N55006 & N55008)	
	N55013	4 Bin Sensor Kit - Contains Items (4 & 9)	
		Replacement Connectors	
A	N29384	Weather Pak Connector - BLACK - 2 Pin Plug	
B	N29385	Weather Pak Connector - BLACK - 2 Pin Socket	
C	N27613	Weather Pak Connector - BLACK - 3 Pin Plug (Male)	
D	N27614	Weather Pak Connector - BLACK - 3 Pin Socket (Female)	
T	206037-1	Amphenol - 16 Prin Plug (Female)	
U	206708-1	Amphenol - 9 Pin Plug (Female)	
		Wire Groument Components	
	N56748	Bimed Locknut - Per Tank	1
	N56749	Bimed Cable Gland - Per Tank	1
	N56750	M-16 Washer - Nitrile Rubber - Per Tank	1

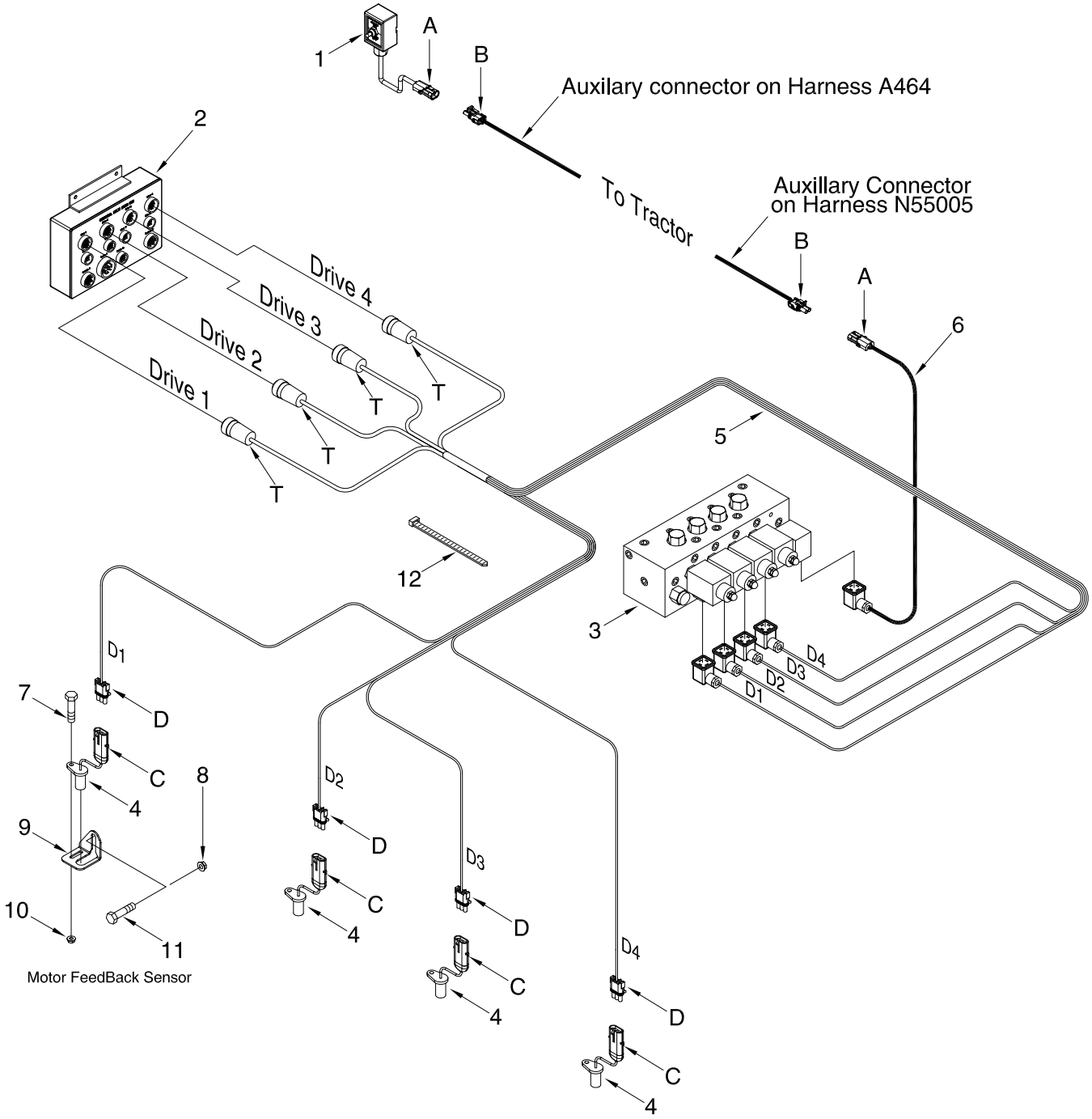
1
A
B
Auxilary connector on Harness A464
2
To Tractor
Auxillary Connector
on Harness N55005
B
A
6
Drive 4
Drive 3
Drive 2
Drive 1
T
T
T
T
5
12
3
D1
D2
D3
D4
7
D
C
4
8
9
10
11
Motor FeedBack Sensor
D2
D
C
4
D3
D
C
4
D4
D
C
4

X30 with IB-1 VR Harness

Item	Part No.	Description	Qty
		Quantities listed are for a 4 Tank system	
1	N55008	TopCon Limp Home Box (AGA4206) - used in Kit N55014	1
2	N50622	Multi Drive Electronic Control Unit - 4 Channel (AGA3980)	1
3	N45195	Valve Manifold Assembly	1
4	N50070	Sensor - Hall Effect (A3680)	5
5	N55006	4 Bin Drive Harness (A3737)	1
6	A3739	Limp Home Harness	1
7	W-469	Hex Bolt - 1/4 x 3/4 Lg	4
8	D-5279	Locknut - 3/8 Serrated	4
9	N29296	Fan Sensor Bracket	4
10	D-5277	Locknut - 1/4 Serrated	4
11	D-5260	Carriage Bolt - 3/8 x 1 1/4 Lg	4
12	D-4838	Nylon Tie Strap - 14 1/2 Lg (Black)	AsReq
		Replacement Connectors	
A	N29384	Weather Pak Connector - BLACK - 2 Pin Plug	
B	N29385	Weather Pak Connector - BLACK - 2 Pin Socket	
C	N27613	Weather Pak Connector - BLACK - 3 Pin Plug (Male)	
D	N27614	Weather Pak Connector - BLACK - 3 Pin Socket (Female)	
T	206037-1	Amphenol - 16 Prin Plug (Female)	

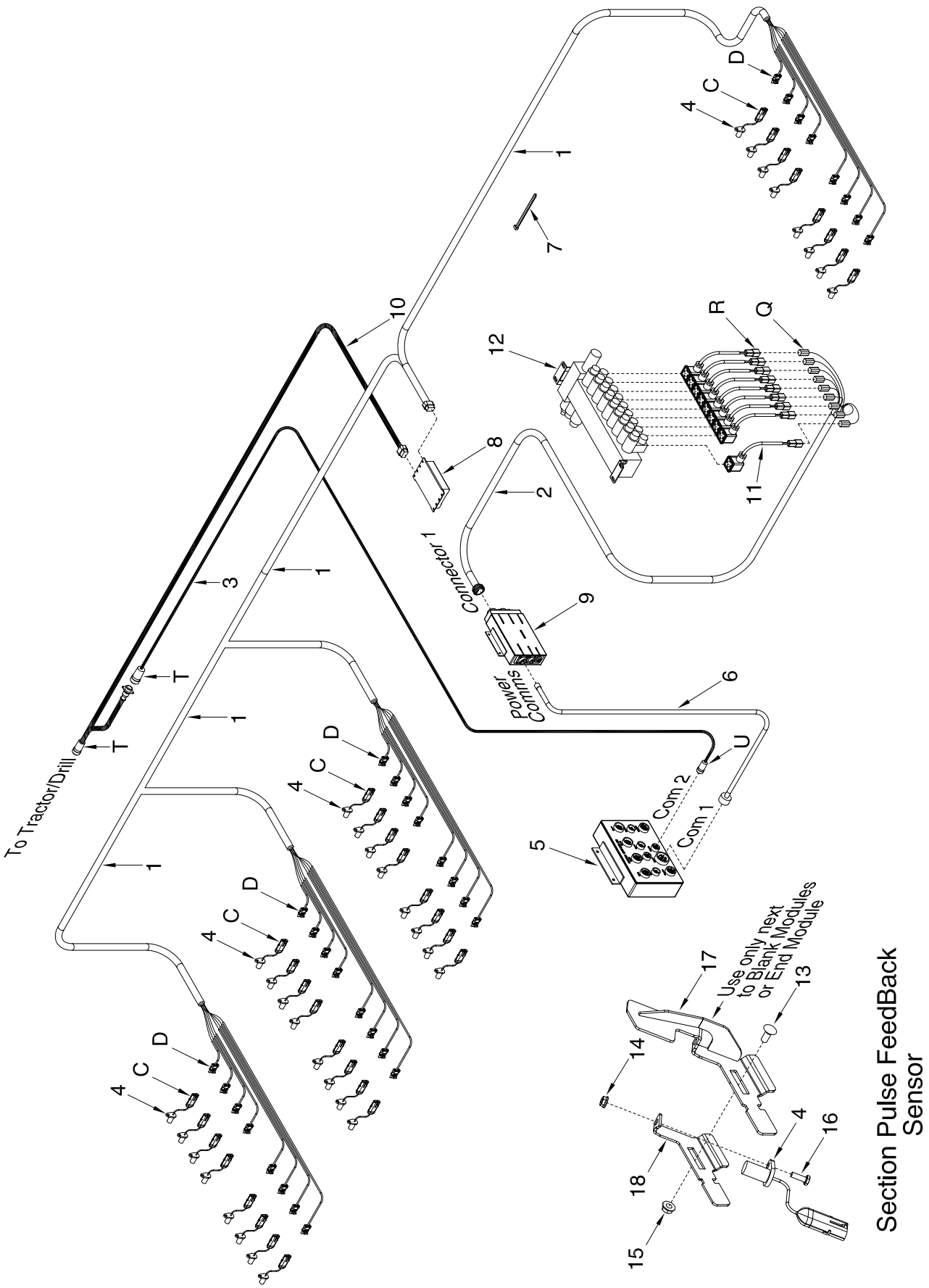

Section Pulse FeedBack Sensor

X30 with IB-1 ICT System			
Item	**Part No.**	**Description**	**Qty**
		Quantities listed are for a 4 Tank system	
1	N55980	ICT Section Sensing Harness	1
2	**N56249**	ICT 9 Granular Section Harness (N55016)	1
3	N55005	Topcon Actuator Harness (A3738) - used in Kit N55014	1
4	N50070	Sensor - Hall Effect (A3680)	32
5	N50622	Multi Drive Electronic Control Unit - 4 Channel (AGA3980) - used in Kit N55014	1
6	N47442	MDECU Adapter Harness (AGA4057)	1
7	D-4838	Nylon Tie Strap - 14 1/2 Lg (Black)	AsReq
8	N55252	Monitor Head For Section Sensing (A1954)	1
9	N55253	Sectional Control with MDECU (AGA4727)	1
10	N47453	Extension Harness (A2669)	1
11	N55258	Hirschman Connector for Granular Section Control (AGA5318)	1
12	N48750	Control Valve	1
13	D-5259	Carriage Bolt - 5/16 x 3/4 Lg	32
14	D-5277	Flange Locknut - 1/4	32
15	D-5278	Flange Locknut - 5/16	32
16	N36597	Hex Bolt - 1/4 x 3/4 Lg	32
17	N55192	Meter Shaft Stop	AsReq
18	N50747	Sensor Bracket	28
	N55032	Section Sensing Harness Kit - Contains Items (1, 8 & 10)	
	N55250	4 Tank 9 Run Sensor Kit - Contains Items (4 & 10)	
	N55015	Morris Granular ICT Kit - Contains Items (2, 6, 9 & 11)	
		Replacement Connectors	
C	N27613	Weather Pak Connector - BLACK - 3 Pin Plug (Male)	
D	N27614	Weather Pak Connector - BLACK - 3 Pin Socket (Female)	
T	206037-1	Amphenol - 16 Pin Plug (Female)	
U	206708-1	Amphenol - 9 Pin Plug (Female)	
Q	C32681	Deutsch DT 2 way Plug with Wedge - Female Pin 16-20G	
R	C32682	Deutsch DT 2 Way Plug with Wedge - Male Pin 16-20G	

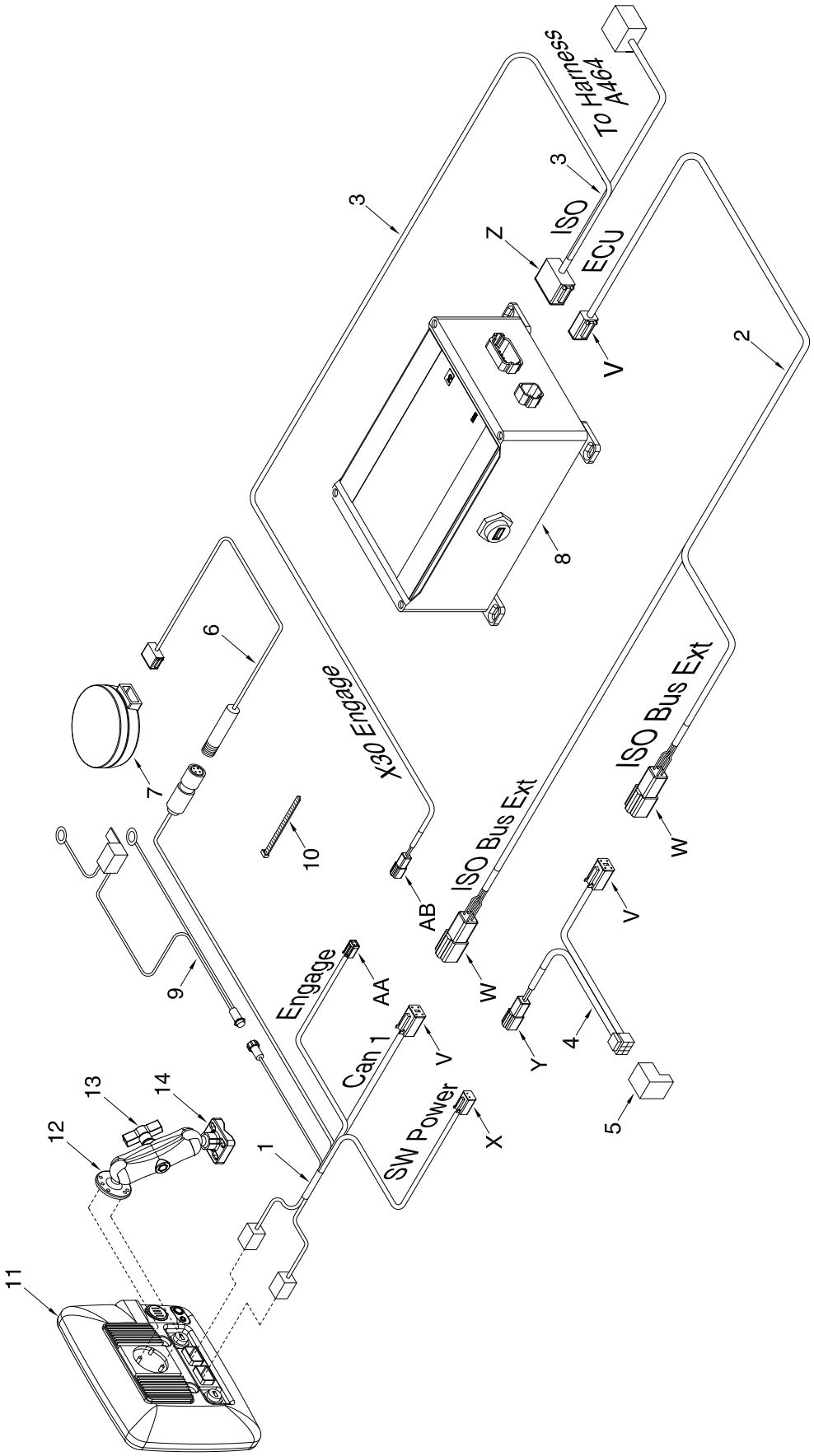
To Harness
A464
3
3
ISO
ECU
Z
V
2
8
6
7
X30 Engage
ISO Bus Ext
ISO Bus Ext
W
W
10
AB
V
9
Engage
AA
Can 1
V
Y
4
5
SW Power
X
1
12
13
14
11

X30 with IB-1 Tractor Installation

Item	Part No.	Description	Qty
1	N53032	Topcon X30 Power/Comms Harness (AGA5072)	1
2	N53052	Ext Harness (AGA5251)	1
3	N53037	ISO Bridge Adapter Harness (AGA4885)	1
4	N53053	Active Term (AGA4678)	1
5	N53054	Can Term Bias Circuit (AGK159)	1
6	N53035	GPS Reciever Harness (AGA4217)	1
7	N53034	GPS Reciever (SGR-1)	1
8	N51414	ISO Bridge - IB1 (AGA4634)	1
9	N55982	X30 Power Harness (AGA4073)	1
10	D-4838	Nylon Tie Strap - 14 1/2 Lg (Black)	AsReq
11	N53031	X30 Console (AGA4477) - Includes Ram Mount Items (12, 13 & 14)	1
12	N55984	Ram Mounting Ball - Circular Base	1
13	K45686	Ram Mounting Arm - 5"	1
14	K45685	Ram Mount Base - U-bolt	1
15	N53064	ISO Bridge Install Guide - Not Shown	1
16	A464	Actuator/Hydraulic Tractor Harness Suit Zynx and Seedrate Controller **(Not Shown)**	1
17	**N55989**	**USB to Serial Adapter - GPS SIMULATOR (Not Shown)**	
18	**N55988**	**Adaptor - N150 Wireless USB - X30 (Not Shown)**	
	N53033	Topcon GPS Antenna Kit (AGA4749) - Contains Items (6 & 7)	
	N53480	Topcon Base Kit (AGA4739) - Contains Items (1 & 11)	
	N53030	Topcon GPS Kit (AGA4748)- Contains Items (1, 6, 7, 9 & 11)	
	N53036	Topcon ISO Bridge Seeder Kit (AGA5291) - Contains items (2, 3, 4, 5, 8 & 15)	
	N55985	Ram Arm Mounting Kit - Contains Items (12, 13 & 14)	
	N55030	X30 110v Power Adapter Desktop (Not Shown) (AGA4957)	
		Replacement Connectors	
V	DT06-4S	Deutcsh - 4 Pin Plug	
W	DT04-4P	Deutcsh - 4 Pin Receptacle	
X	DT06-2S	Deutcsh - 2 Pin Plug	
Y	DT04-2P	Deutcsh - 2 Pin Receptacle	
Z	DT06-12S	Deutcsh - 12 Pin Plug	
AA	DTM06-2S	Deutcsh - 2 Pin Plug	
AB	DTM04-2P	Deutcsh - 2 Pin Receptacle	

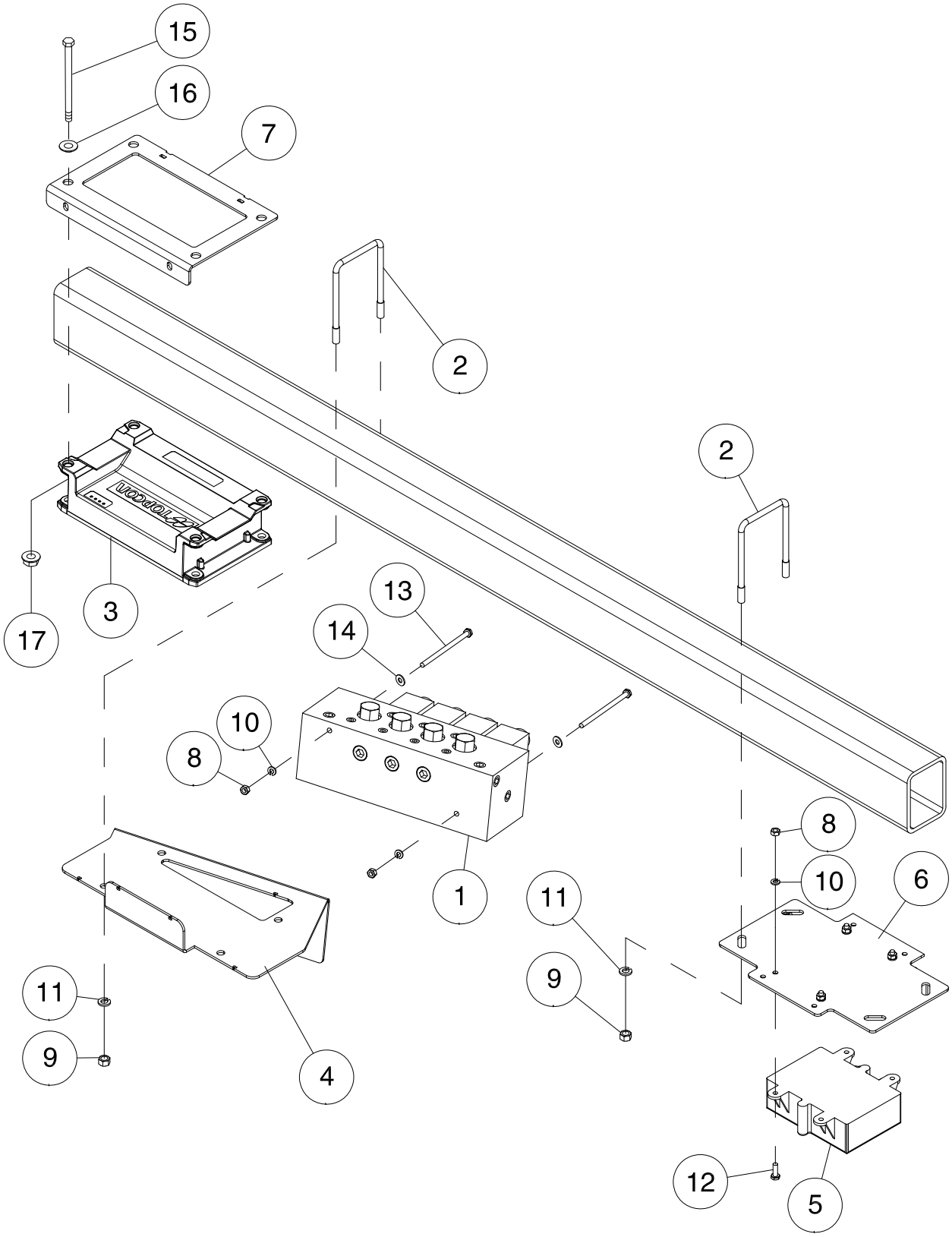
15
16
7
2
2
17
3
13
14
10
8
1
8
10
6
11
9
11
9
4
12
5

X30 Apollo Control and Valve Mount - Prior to 2018

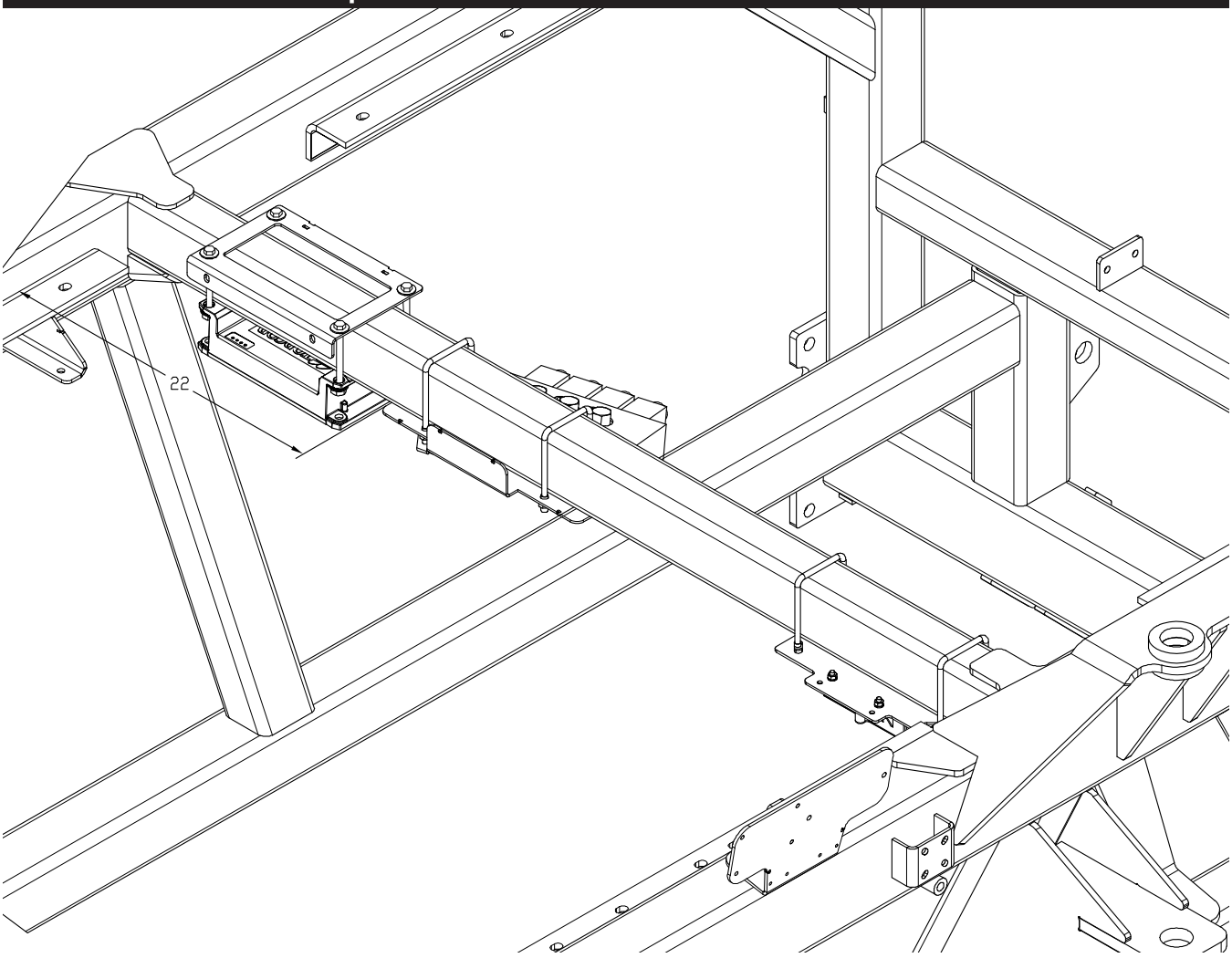

Item	Part No.	Description	Qty
1	N45195	Valve Manifold Assembly	1
2	N49642	U-Bolt - 3/8 x 3 1/16 x 4 15/16 UL - 9365 to 9650 (Prior to 2018)	4
	N19723	U-Bolt - 3/8 x 4 1/16 x 6 15/16 UL - 9800 and 91000 (Prior to 2018)	4
3	N55950	Apollo Master Module ECU - CM-40 - AGA5339	1
4	N53456	Plate - Manifold Mount	1
5	N53020	Control Box - Wireless Auger Remote	1
6	N53023	Plate - Mounting Bracket (Prior to 2018)	1
7	N58190	Bracket - ECU Mount	1
8	W-512	Hex Nut - 1/4	2
9	W-514	Hex Nut - 3/8 (Prior to 2018)	8
10	W-521	Lockwasher - 1/4	2
11	W-523	Lockwasher - 3/8 (Prior to 2018)	8
12	W-469	Hex Head - 1/4 x 3/4 Lg	8
13	W-1847	Hex Bolt - 1/4 x 5 Lg	2
14	S-1198	Flatwasher - 5/16 ID x 3/4 OD x 1/16	2
15	C-3918	Hex Bolt - 3/8 x 5 Lg - 9445, 9550 and 9650	4
	N19678	Hex Bolt - 3/8 x 7 Lg - 9800 and 91000	4
16	W-542	Flat Washer - 13/32 ID x 11/16 OD x .083 thick	4
17	D-5279	Locknut - 3/8 Serrated Flange	4

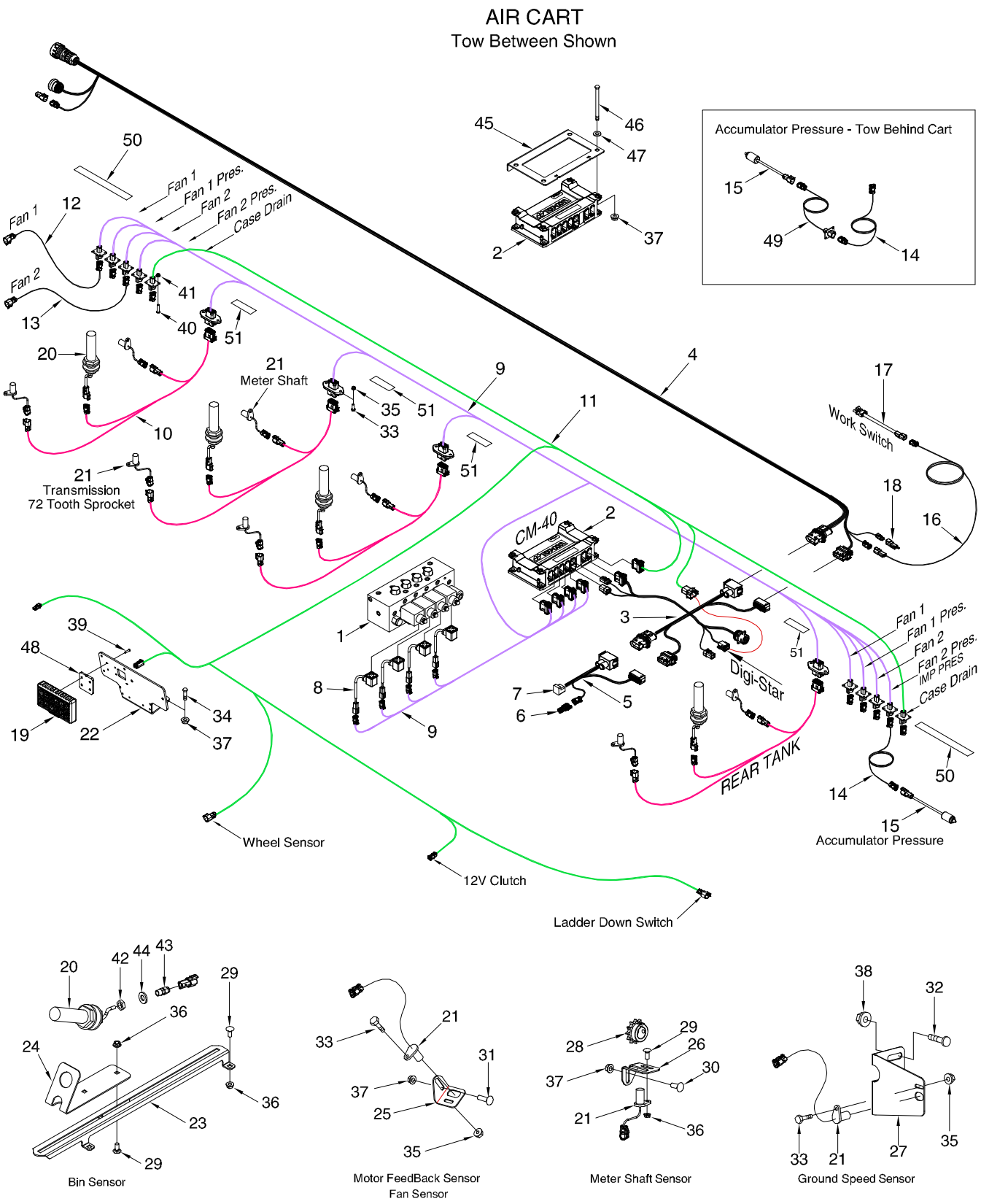
AIR CART
Tow Between Shown
Accumulator Pressure - Tow Behind Cart
Fan 1
Fan 1 Pres.
Fan 2
Fan 2 Pres.
Case Drain
Meter Shaft
Transmission
72 Tooth Sprocket
Work Switch
CM-40
Digi-Star
IMP PRES
REAR TANK
Accumulator Pressure
Wheel Sensor
12V Clutch
Ladder Down Switch

Bin Sensor

Motor FeedBack Sensor
Fan Sensor

Meter Shaft Sensor

Ground Speed Sensor

X30 Apollo Cart Harness - Prior to 2018

Item	Part No.	Description	Qty
		Quantities listed are for a 4 Tank system	
1	N45195	Valve Manifold Assembly	1
2	N55950	Apollo Master Module ECU - CM-40 - AGA5339	1
3	N56501	Harness Apollo ECU - AGA5343	1
4	N56502	Harness Apollo Front Trunk - 9m - AGA5448	1
5	N56505	Harness Apollo Terminator - AGA5345	1
6	N56519	Terminator Cap - AGY1355	1
7	N53054	CAN Term Bias Circuit - AGK159	1
8	N55258	Hirschmann Connector - AGA5318	4
9	N58110	Harness Backbone Long Chassis - 1005341-01	1
10	N58111	Harness Tank Adapter - 1005342-01	4
11	N58112	Harness Auxilary - 1005343-01	1
12	N56512	Harness Extension - 3P Deutsch - 2m - AGA4471	1
13	N56513	Harness Extension - 3P Deutsch - 5m - AGA4472	1
14	**N62084**	**Harness Extension Adapter - 3P Deutsch - 10m - 1014888-01**	**1**
15	N58963	Pressure Transducer - Accumulator	1
16	N59010	Harness Extension - Work Switch - 5m - AGA4468	1
17	N60323	Harness Adapter - Work Switch - 5m - 1015894-01	1
18	N59012	Safety Switch Loop	1
19	N56500	Keypad - AGA5504	1
20	N56507	Bin Level Sensor - AGA5478	4
21	N56511	Proximity Sensor - 1004033-01	9
22	N55833	Mount Plate - Bolt-On	1
	N62080	Mount Plate - 9800 - 91000	1
23	N40899	Adjustment Plate	4
24	N34799	Bracket - Bin Level Sensor	4
25	N29296	Fan Sensor Bracket	5
26	N45199	Shaft Sensor Bracket	4
27	N37330	Ground Speed Sensor Bracket - 4 5/8 Lg - 9365, 9450 and 9535	1
	N53664	Ground Speed Sensor Bracket - 6 1/2 Lg - 9445, 9550, 9650, 9800 and 91000	
28	N45198	Sprocket - 40B18 - 3/4 Diameter Bore - VRT	4
	D17946	Sprocket - 40B12 - 1 Diameter Bore - ICT	4
29	D-5259	Carriage Bolt - 5/16 x 3/4 Lg	20
30	P7C616	Carriage Bolt - 3/8 x 1 Lg	4
31	D-5260	Carriage Bolt - 3/8 x 1 1/4 Lg	5
32	D-5265	Carriage Bolt - 1/2 x 1 Lg	2
33	W-469	Hex Bolt - 1/4 x 3/4 Lg	14
34	W-475	Hex Bolt - 3/8 x 1 Lg	2
35	D-5277	Locknut - 1/4 Serrated Flange	14
36	D-5278	Locknut - 5/16 Serrated Flange	20
37	D-5279	Locknut - 3/8 Serrated Flange	15
38	D14565	Locknut - 1/2 Serrated Flange	2
39	N59962	Machine Screw - #10 x 3/4 Lg (Hex Head)	4
40	N29486	Machine Screw - #8 x 5/8 Lg (Phillips Pan Head)	20
41	N16564	Locknut - #8-32 Serrated	20
42	N56748	Bimed Locknut - 1 Per Tank	4
43	N56749	Bimed Cable Gland - 1 Per Tank	4
44	N56750	M-16 Washer - Nitrile Rubber - 1 Per Tank	4
45	N58190	Bracket - ECU Mount	1
46	C-3918	Hex Bolt - 3/8 x 5 Lg - 9445, 9550 and 9650	4
	N19678	Hex Bolt - 3/8 x 7 Lg - 9800 and 91000	4
47	W-542	Flat Washer - 13/32 ID x 11/16 OD x .083 thick	4
48	N56949	Spacer Plate	1
49	**N60921**	**Pressure Transducer Extension Harness - 7m - 1015895-01 (Tow Behind)**	**1**
50	N60417	Decal - Plug ID	2
51	N60418	Decal - Harness ID	4
	D-4838	Nylon Tie Strap - 14 1/2 Lg (Black)	AsReq

ICT System

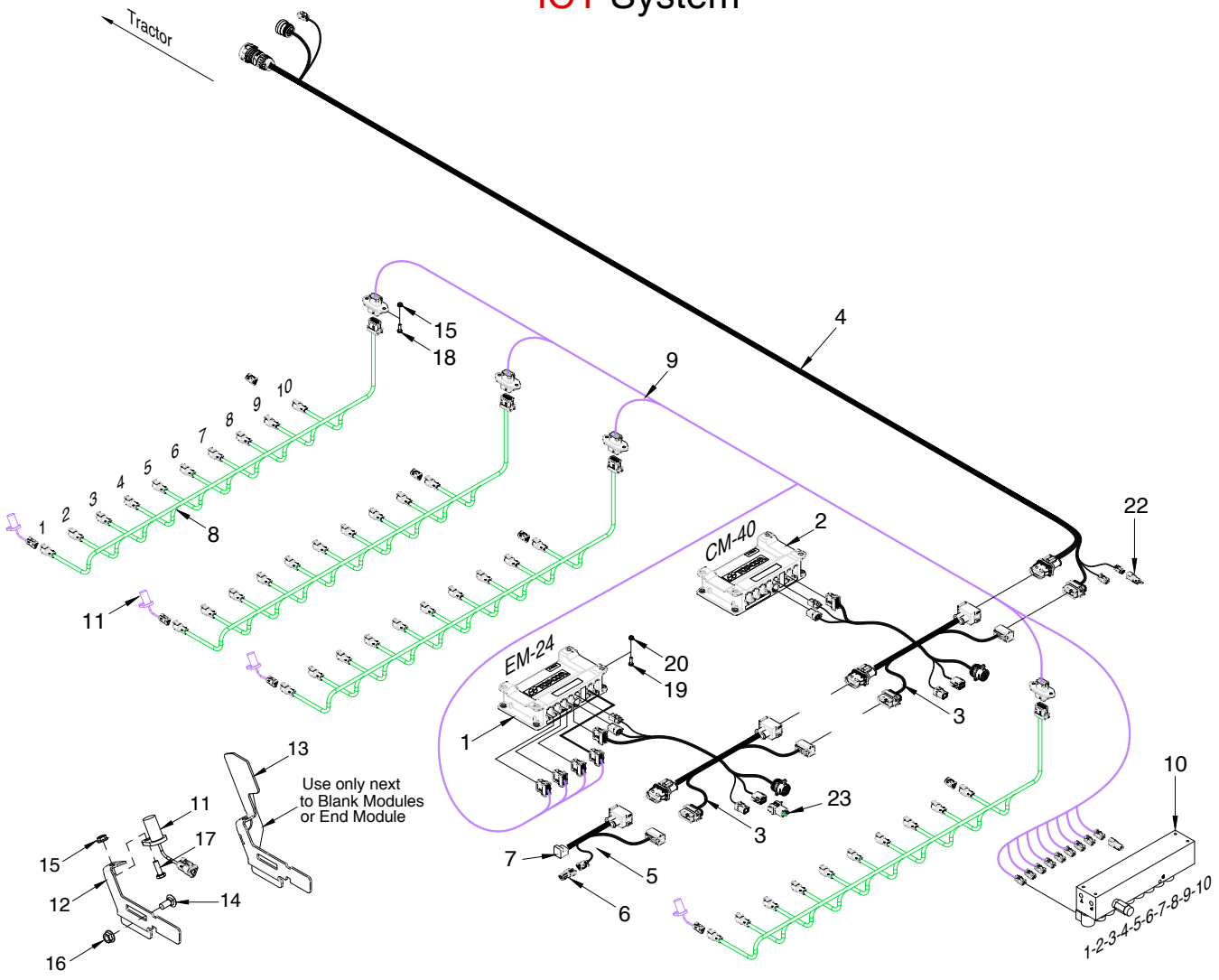
Tractor
4
15
18
9
10
9
8
7
6
5
4
3
2
1
8
11
22
CM-40
2
EM-24
20
19
1
3
13
Use only next
to Blank Modules
or End Module
11
17
15
12
14
16
23
3
7
5
6
10
1-2-3-4-5-6-7-8-9-10

X30 Apollo ICT System - Prior to 2018

Item	Part No.	Description	Qty
		Quantities listed are for a 4 Tank 10 run system	
1	N55951	Apollo I/O Module ECU - EM-24 - AGA5360	1
2	N55950	Apollo Master Module ECU - CM-40 - AGA5339	1
3	N56501	Harness Apollo ECU - AGA5343	1
4	N56502	Harness Apollo Front Trunk - 9m - AGA5448	1
5	N56505	Harness Apollo Terminator - AGA5345	1
6	N56519	Terminator Cap - AGY1355	1
7	N53054	CAN Term Bias Circuit	1
8	N58113	Harness ICT Input Adapter - 1005344-01	4
9	N58114	Harness ICT Backbone - 1005345-01	1
10	N58320	ICT Control Valve	1
	N48750	Control Valve - Prior to 2016	1
	N55258	Hirschman Connector for Granular Section Control (AGA5318)	1
11	N56511	Proximity Sensor - 1004033-01	40
12	N64789	Sensor Bracket	36
13	N55192	Meter Shaft Stop	AsReq
14	D-5259	Carriage Bolt - 5/16 x 3/4 Lg	40
15	D-5277	Locknut - 1/4 Serrated Flange	54
16	D-5278	Locknut - 5/16 Serrated Flange	40
17	N36597	Hex Bolt - 1/4 x 3/4 Lg Stainless Steel	40
18	W-469	Hex Bolt - 1/4 x 3/4 Lg	14
19	W-187	Hex Bolt - 3/8 x 1 1/4 Lg - Bolts ECUs together	4
20	D-5279	Locknut - 3/8 Serrated Flange	4
21	D-4838	Nylon Tie Strap - 14 1/2 Lg (Black)	AsReq
22	N59012	Safety Switch Loop	1
23	N74243	ISO Bus Loop Cap - ECU Harness	1

Tractor ICT Connection without ISO BUS

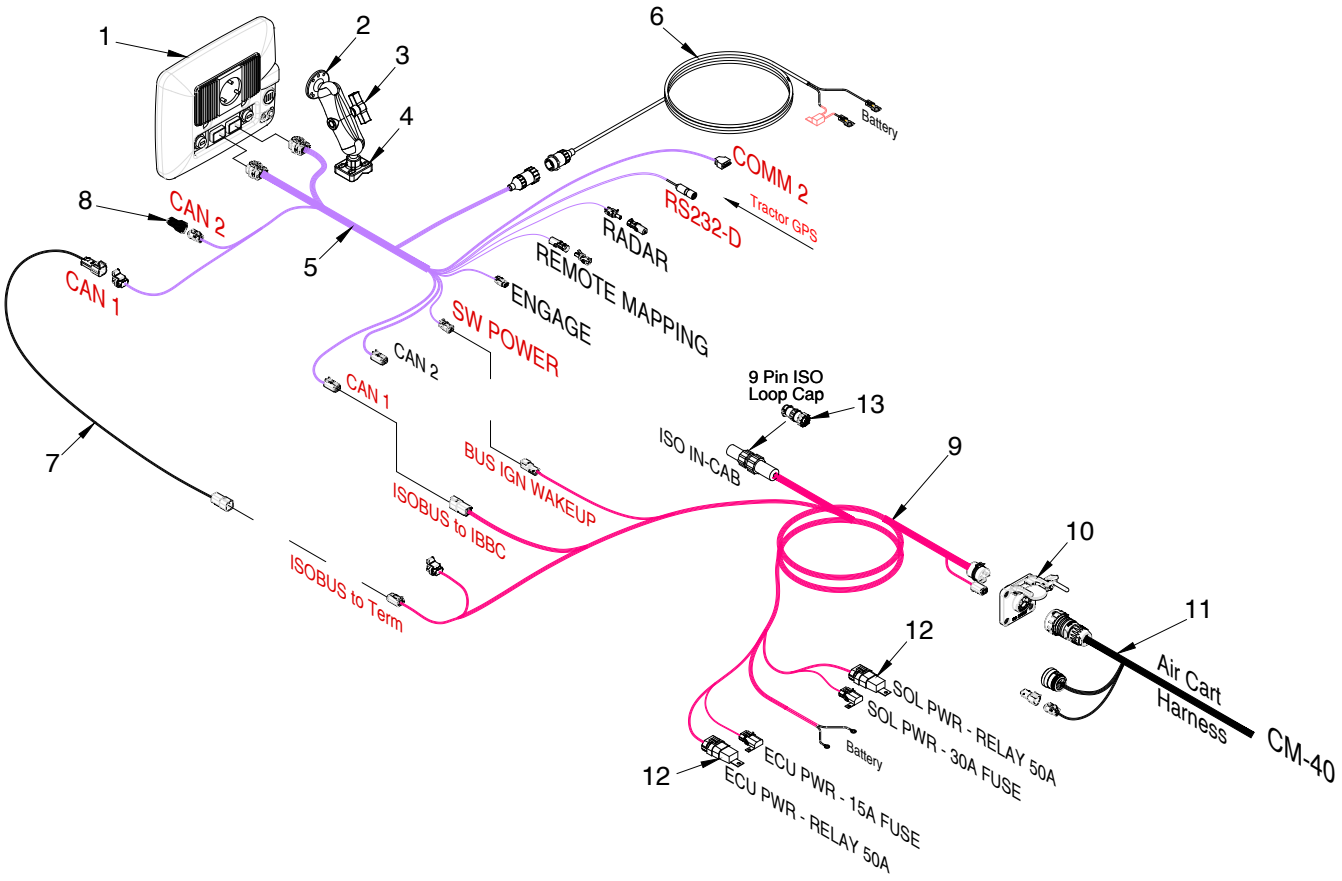

Item	Part No.	Description	Qty
1	N53031	X30 Console (AGA4477) - Includes Ram Mount Items (2, 3 & 4)	1
2	N55984	Ram Mounting Ball - Circular Base	1
3	K45686	Ram Mounting Arm - 5"	1
4	K45685	Ram Mount Base - U-Bolt	1
5	N53032	Harness - Topcon X30 Power/Comms (AGA5072)	1
6	N55982	Harness - X30 Power (AGA4073)	1
7	N56517	Harness - ISO Adapter- AGA5377	1
8	N56519	Terminator Cap - AGY1355	1
9	N58965	Harness - GEN 2 LITE (1005455-01) - Includes Items 10 and 12	1
10	N56504	Implement Breakaway Connector - IBBC (AGK163)	1
11	N56502	Harness Apollo Front Trunk - 9m - AGA5448	1
12	N72030	Relay - 50A	2
13	N74244	ISO Loop Cap - [9 Pin Amp circular]	1
	N55985	Ram Arm Mounting Kit - Contains Items (2, 3 & 4)	
	N55030	X30 110v Power Adapter Desktop (Not Shown) (AGA4957)	

Tractor ICT Connection without ISO BUS

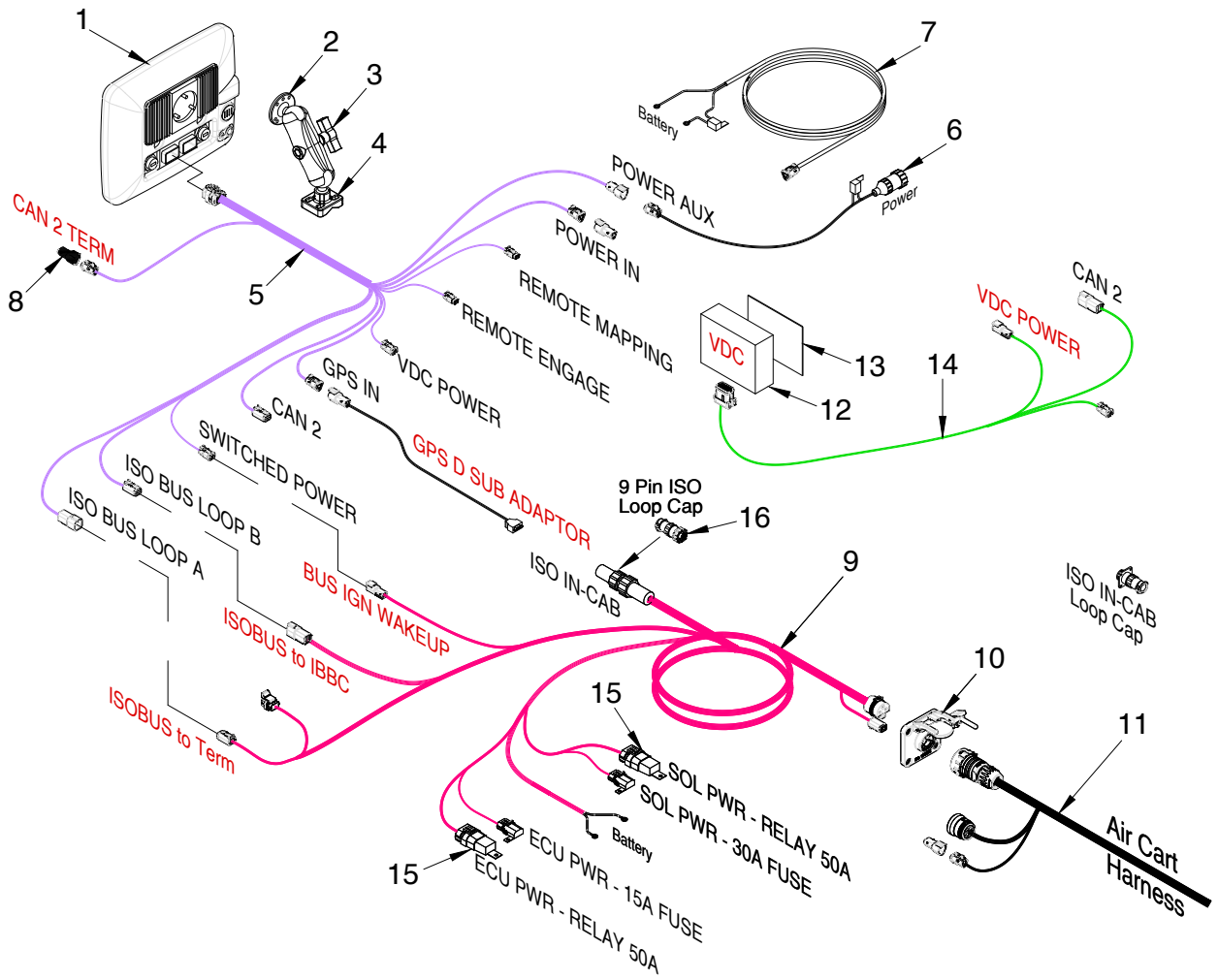

Item	Part No.	Description	Qty
1	N53031	X30 Console (AGA4477) - Includes Ram Mount Items (2, 3 & 4)	1
2	N55984	Ram Mounting Ball - Circular Base	1
3	K45686	Ram Mounting Arm - 5"	1
4	K45685	Ram Mount Base - U-Bolt	1
5	N60920	Harness - Topcon X30 Power/Comms (1006259-01)	1
6	N62370	Harness - X30 Power (AGA5246)	1
7	N62371	Harness - X30 Power (1006970-01) - Optional	
8	N56519	Terminator Cap - AGY1355	1
9	N58965	Harness - GEN 2 LITE (1005455-01) - Includes Items 10 and 15	1
10	N56504	Implement Breakaway Connector - IBBC (AGK163)	1
11	N56502	Harness Apollo Front Trunk - 9m - AGA5448	1
12	N68947	VDC Jog Wheel Controller (1003393-01) - Optional	1
13	N68948	VDC Controller Bracket (AGA5486) - Optional	1
14	N68949	VDC Harness (1004112-01) - Optional	1
	N58959	VDC Kit (1005089-01) - Includes Items 12, 13 and 14	
15	N72030	Relay - 50A	2
16	N74244	ISO Loop Cap - [9 Pin Amp circular]	1
	N55985	Ram Arm Mounting Kit - Contains Items (2, 3 & 4)	
	N55030	X30 110v Power Adapter Desktop (Not Shown) (AGA4957)	

Tow Behind Air Cart Seed Unit

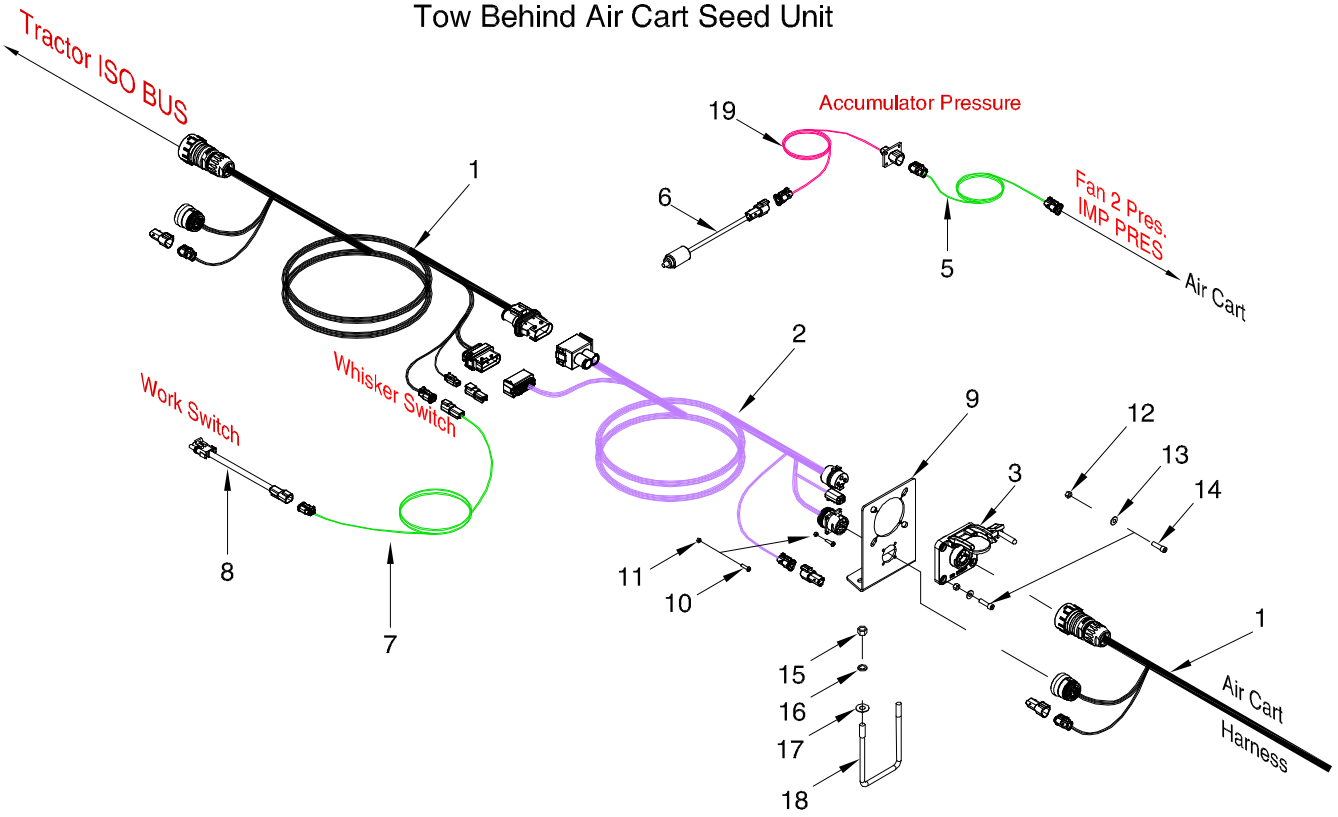

Item	Part No.	Description	Qty
1	N56502	Harness Apollo Front Trunk - 9m - AGA5448	1
2	N56503	Harness Apollo Rear Trunk - 9m - AGA5446	1
3	N56504	Implement Breakaway Connector - IBBC (AGK163)	1
4	N56513	Harness Extension - 3P Deutsch - 5m - AGA4472	1
5	N62084	Harness Extension Adapter - 3P Deutsch - 10m - 1014888-01	1
6	N58963	Pressure Transducer - Accumulator	1
7	N59010	Harness Extension - Work Switch - 5m - AGA4468	1
8	N60323	Harness Adapter - Work Switch - 5m - 1015894-01	1
9	N60321	Bracket - IBBC Mount	1
10	N29486	Machine Screw - #8 x 5/8 Lg (Phillips Pan Head)	4
11	N16564	Locknut - #8-32 Serrated	4
12	N22778	Locknut - 1/4 Nylon Insert	4
13	N40748	Flat Washer - 17/64 ID x 3/4 OD x 0.062 thick	4
14	N60320	Cap Screw - 1/4 x 7/8 Lg	4
15	W-514	Hex Nut - 3/8	2
16	W-523	Lockwasher - 3/8	2
17	D-5579	Flat Washer - 13/32 ID x 1 OD x 16GA	2
18	N49642	U-Bolt - 3/8 x 3 1/16 x 4 15/16 UL	1
19	N60921	Pressure Transducer Extension Harness - 7m - 1015895-01	1

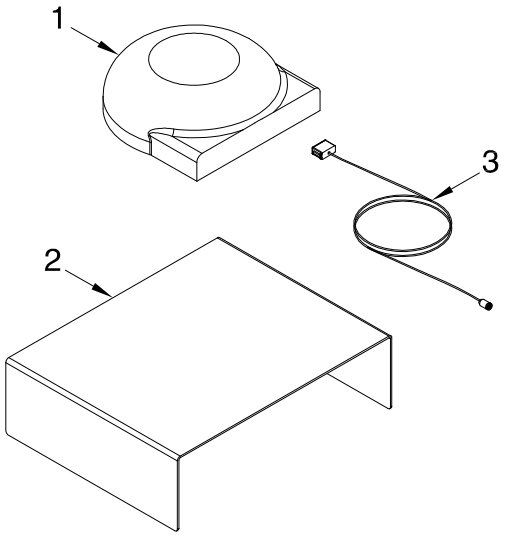

Item	Part No.	Description	Qty
1	N56900	AGI-4 Receiver (01-104701-01)	1
2	N58100	AGI-4 Roof Bracket Universal (1001005-01)	1
3	N58101	AGI-4 Roof Harness (AGA5250)	1
	N56904	Kit - AGI-4 Receiver (Includes Above Items)	


WIRELESS REMOTE

16
2
3
15
13
14
10
8
8
10
1
11
9
4
12
5

X35 Apollo Control and Valve Mount - 2018

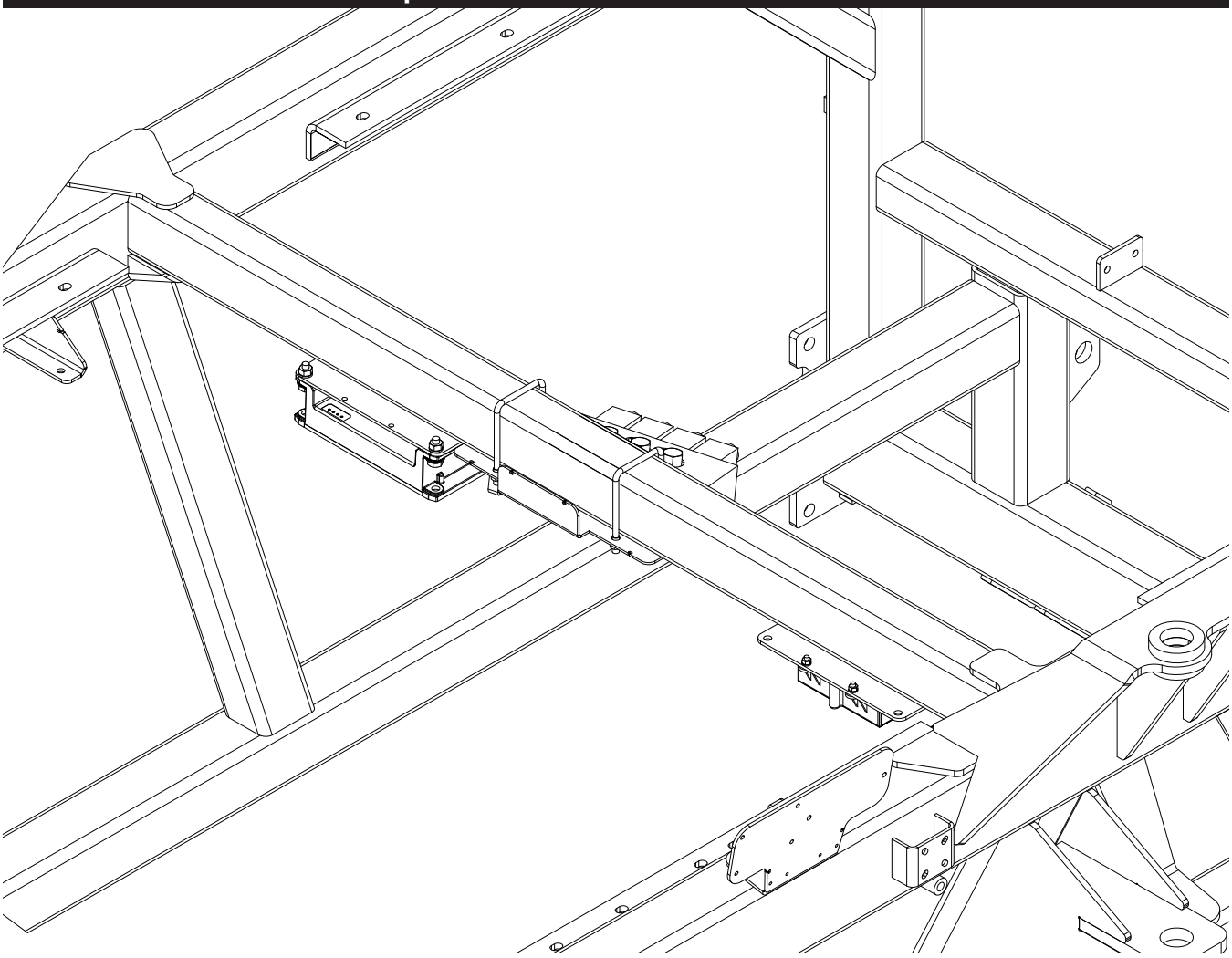

Item	Part No.	Description	Qty
1	N45195	Valve Manifold Assembly	1
2	N49642	U-Bolt - 3/8 x 3 1/16 x 4 15/16 UL - 9365 to 9650	2
	N19723	U-Bolt - 3/8 x 4 1/16 x 6 15/16 UL - 9800 and 91000	2
3	N55950	Apollo Master Module ECU - CM-40 - AGA5339	1
4	N53456	Plate - Manifold Mount	1
5	N53020	Control Box - Wireless Auger Remote	1
8	W-512	Hex Nut - 1/4	6
9	W-514	Hex Nut - 3/8	4
10	W-521	Lockwasher - 1/4	6
11	W-523	Lockwasher - 3/8	4
12	W-469	Hex Head - 1/4 x 3/4 Lg	4
13	W-1847	Hex Bolt - 1/4 x 5 Lg	2
14	S-1198	Flatwasher - 5/16 ID x 3/4 OD x 1/16	2
15	W-187	Hex Bolt - 3/8 x 1 1/4 Lg	4
16	10229	Lock Nut - 3/8	4

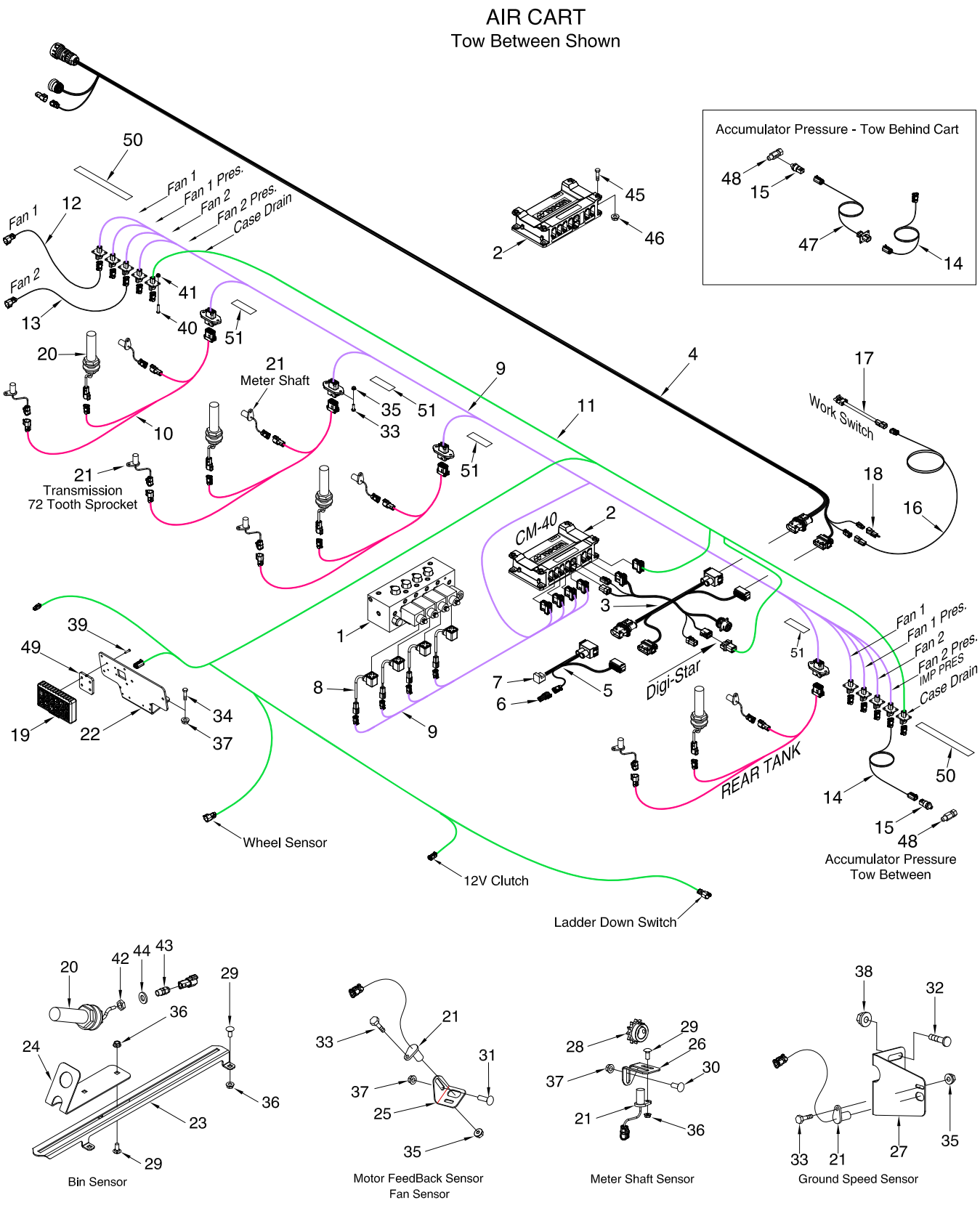
AIR CART
Tow Between Shown
Accumulator Pressure - Tow Behind Cart
48
15
47
14
50
Fan 1
Fan 1 Pres.
Fan 2
Fan 2 Pres.
Case Drain
12
41
40
51
13
20
21
Meter Shaft
35
33
10
9
11
4
17
Work Switch
18
16
21
Transmission
72 Tooth Sprocket
CM-40
2
3
1
8
9
7
6
5
Digi-Star
REAR TANK
39
49
19
22
34
37
Wheel Sensor
12V Clutch
Ladder Down Switch
IMP PRES
14
15
48
Accumulator Pressure
Tow Between
20
42
44
43
29
36
24
23
Bin Sensor
21
33
31
37
25
35
Motor FeedBack Sensor
Fan Sensor
28
26
30
Meter Shaft Sensor
38
32
27
Ground Speed Sensor

X35 Apollo Cart Harness - 2018

Item	Part No.	Description	Qty
		Quantities listed are for a 4 Tank system	
1	N45195	Valve Manifold Assembly	1
2	N55950	Apollo Master Module ECU - CM-40 - (AGA5339)	1
3	N56501	Harness Apollo ECU - (AGA5343)	1
4	N56502	Harness Apollo Front Trunk - 9m - (AGA5448)	1
5	N56505	Harness Apollo Terminator - (AGA5345)	1
6	N56519	Terminator Cap - (AGY1355)	1
7	N53054	CAN Term Bias Circuit -(AGK159)	1
8	N55258	Hirschmann Connector - (AGA5318)	4
9	N58110	Harness Backbone Long Chassis - (1005341-01)	1
10	N58111	Harness Tank Adapter - (1005342-01)	4
11	N58112	Harness Auxilary - (1005343-01)	1
12	N56512	Harness Extension - 3P Deutsch - 2m - (AGA4471)	1
13	N56513	Harness Extension - 3P Deutsch - 5m - (AGA4472)	1
14	N64670	Harness Extension Adapter - DT06-4S to DT06-3S - 10m - (1024229-01)	1
15	K62977	Pressure Transducer - Accumulator	1
16	N59010	Harness Extension - Work Switch - 5m - (AGA4468)	1
17	N60323	Harness Adapter - Work Switch - 3m - (1015894-01)	1
18	N59012	Safety Switch Loop	1
19	N56500	Keypad - (AGA5504)	1
20	N56507	Bin Level Sensor - (AGA5478)	4
21	N56511	Proximity Sensor - (1004033-01)	9
22	N55833	Mount Plate - 9365 - 9650	1
	N62080	Mount Plate - 9800 - 91000	1
23	N40899	Adjustment Plate	4
24	N34799	Bracket - Bin Level Sensor	4
25	N29296	Fan Sensor Bracket	5
26	N45199	Shaft Sensor Bracket	4
27	N37330	Ground Speed Sensor Bracket - 4 5/8 Lg - 9365, 9450 and 9535	1
	N53664	Ground Speed Sensor Bracket - 6 1/2 Lg - 9445, 9550, 9650, 9800 and 91000	
28	N45198	Sprocket - 40B18 - 3/4 Diameter Bore - VRT	4
	D17946	Sprocket - 40B12 - 1 Diameter Bore - ICT	4
29	D-5259	Carriage Bolt - 5/16 x 3/4 Lg	20
30	P7C616	Carriage Bolt - 3/8 x 1 Lg	4
31	D-5260	Carriage Bolt - 3/8 x 1 1/4 Lg	5
32	D-5265	Carriage Bolt - 1/2 x 1 Lg	2
33	W-469	Hex Bolt - 1/4 x 3/4 Lg	14
34	W-475	Hex Bolt - 3/8 x 1 Lg	2
35	D-5277	Locknut - 1/4 Serrated Flange	14
36	D-5278	Locknut - 5/16 Serrated Flange	20
37	D-5279	Locknut - 3/8 Serrated Flange	15
38	D14565	Locknut - 1/2 Serrated Flange	2
39	N59962	Machine Screw - #10 x 3/4 Lg (Hex Head)	4
40	N29486	Machine Screw - #8 x 5/8 Lg (Phillips Pan Head)	20
41	N16564	Locknut - #8-32 Serrated	20
42	N56748	Bimed Locknut - 1 Per Tank	4
43	N56749	Bimed Cable Gland - 1 Per Tank	4
44	N56750	M-16 Washer - Nitrile Rubber - 1 Per Tank	4
45	W-187	Hex Bolt - 3/8 x 1 1/4 Lg	4
46	10229	Lock Nut - 3/8	4
47	N64671	Pressure Transducer Extension Harness - 7m - (1024230-01) (Tow Behind)	1
48	K62978	Tee - Gauge Port - 7/8-14 (#10) MJIC x 7/8-14 (#10) FJIC x 7/16-20 (#4) FORB	1
49	N56949	Spacer Plate	1
50	N60417	Decal - Plug ID	2
51	N60418	Decal - Harness ID	4
	D-4838	Nylon Tie Strap - 14 1/2 Lg (Black)	AsReq

ICT System

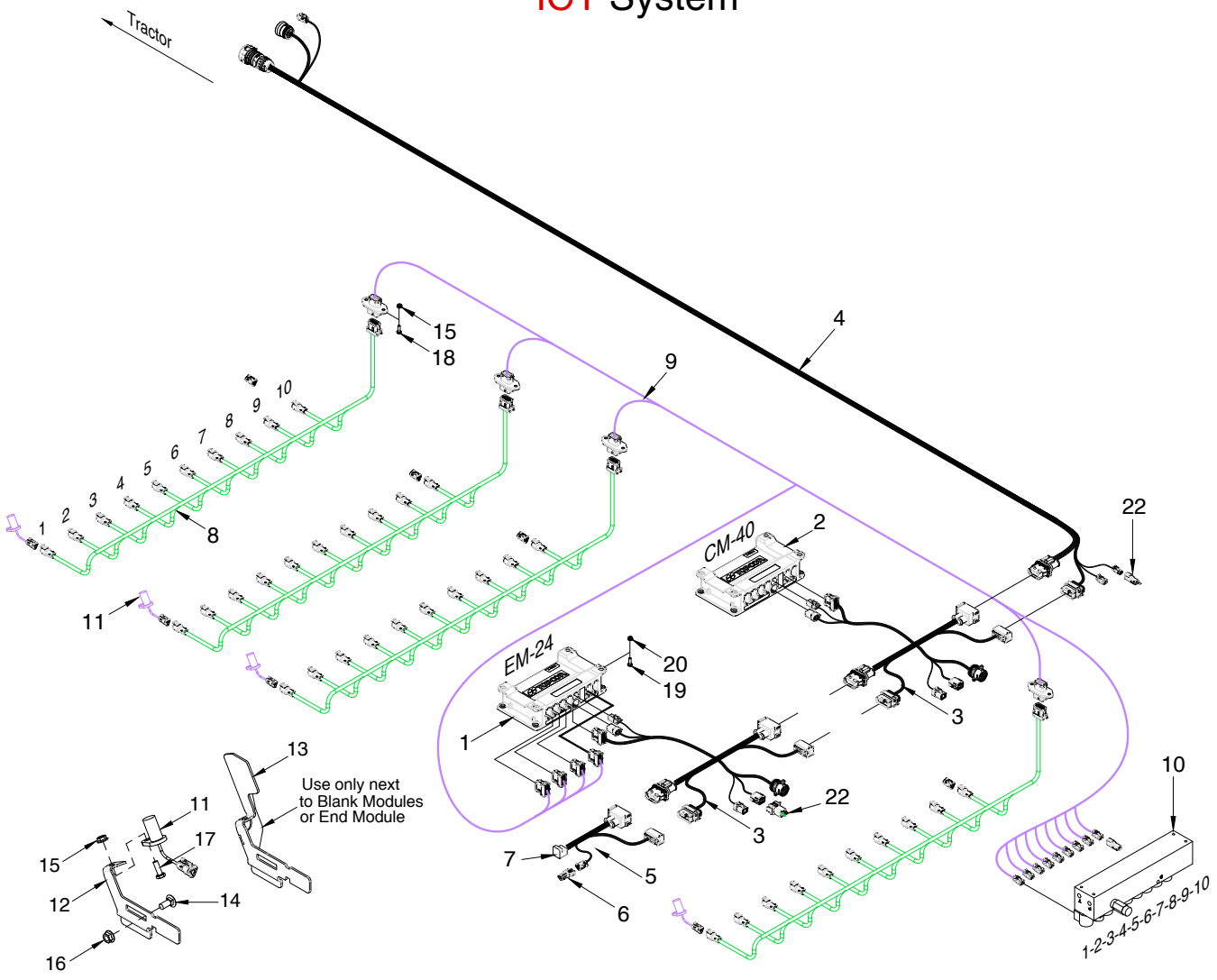
Tractor
4
15
18
9
10
9
8
7
6
5
4
3
2
1
8
11
22
CM-40
2
EM-24
20
19
1
3
22
3
7
5
6
10
1-2-3-4-5-6-7-8-9-10
13
Use only next
to Blank Modules
or End Module
11
17
15
12
14
16

X35 Apollo ICT System - 2018

Item	Part No.	Description	Qty
		Quantities listed are for a 4 Tank 10 run system	
1	N55951	Apollo I/O Module ECU - EM-24 - (AGA5360)	1
2	N55950	Apollo Master Module ECU - CM-40 - (AGA5339)	1
3	N56501	Harness Apollo ECU - (AGA5343)	1
4	N56502	Harness Apollo Front Trunk - 9m - (AGA5448)	1
5	N56505	Harness Apollo Terminator - (AGA5345)	1
6	N56519	Terminator Cap - (AGY1355)	1
7	N53054	CAN Term Bias Circuit - (AGK159)	1
8	N58113	Harness ICT Input Adapter - (1005344-01)	4
9	N58114	Harness ICT Backbone - (1005345-01)	1
10	N58320	ICT Control Valve	1
	N48750	Control Valve - Prior to 2016	1
	N55258	Hirschman Connector for Granular Section Control - (AGA5318)	1
11	N56511	Proximity Sensor - (1004033-01)	40
12	N64789	Sensor Bracket	36
13	N55192	Meter Shaft Stop	AsReq
14	D-5259	Carriage Bolt - 5/16 x 3/4 Lg	40
15	D-5277	Locknut - 1/4 Serrated Flange	54
16	D-5278	Locknut - 5/16 Serrated Flange	40
17	N36597	Hex Bolt - 1/4 x 3/4 Lg Stainless Steel	40
18	W-469	Hex Bolt - 1/4 x 3/4 Lg	14
19	W-187	Hex Bolt - 3/8 x 1 1/4 Lg - Bolts ECUs together	4
20	D-5279	Locknut - 3/8 Serrated Flange	11
21	D-4838	Nylon Tie Strap - 14 1/2 Lg (Black)	AsReq
22	N74243	ISO Bus Loop Cap - ECU Harness	1

Tractor ICT Connection without ISO BUS

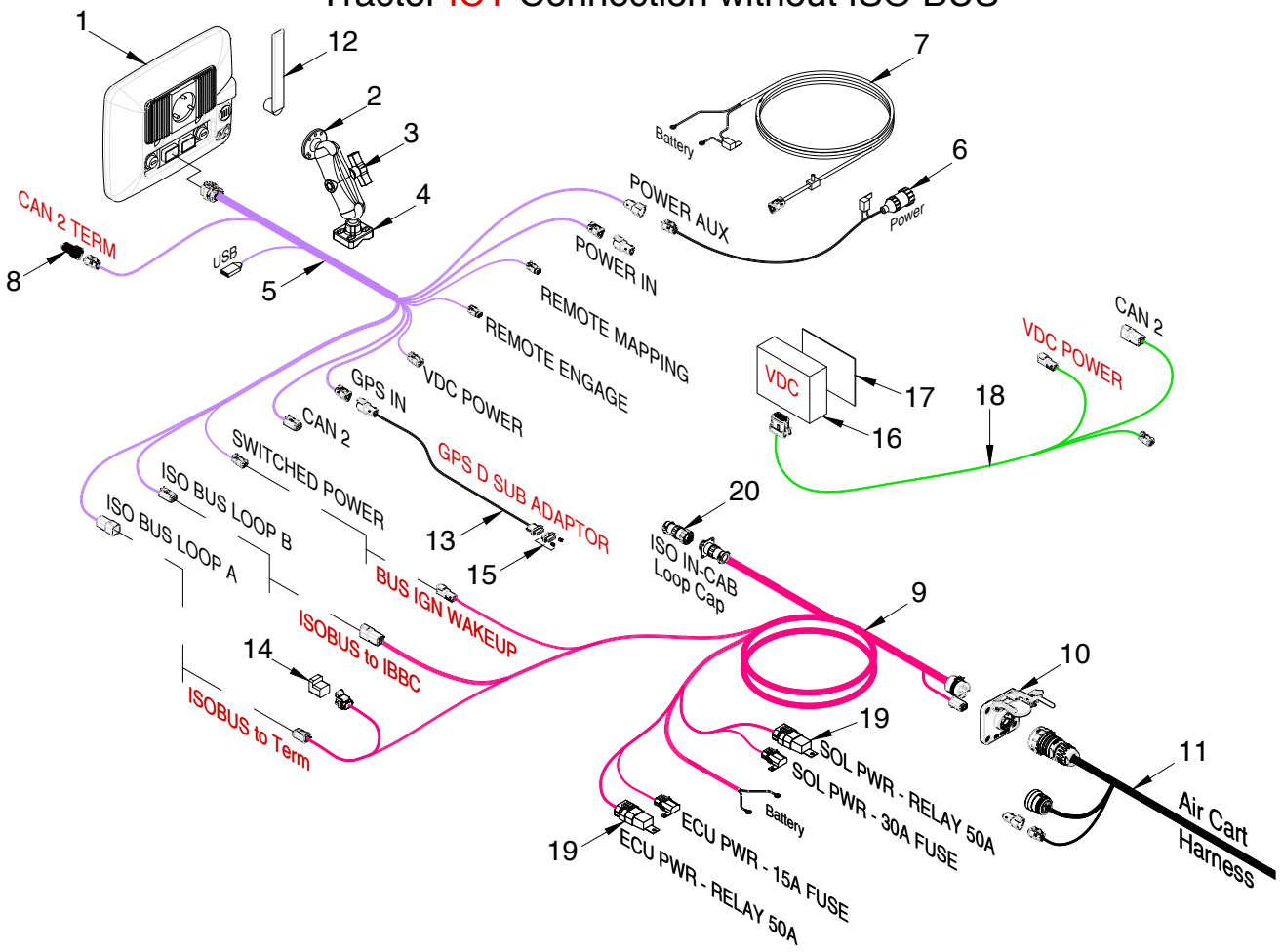

Item	Part No.	Description	Qty
1	N64500	X35 Console (1007188-01) - Includes Ram Mount Items (2, 3 & 4)	1
2	N55984	Ram Mounting Ball - Circular Base	1
3	K45686	Ram Mounting Arm - 5"	1
4	K45685	Ram Mount Base - U-Bolt	1
5	N64502	Harness - Topcon X35 Power/Comms (1019154-01)	1
6	N62370	Harness - X30 Power (AGA5246)	1
7	N62371	Harness - X30 Power (1006970-01) - Optional	
8	N56519	Terminator Cap - (AGY1355)	1
9	N58965	Harness - GEN 2 LITE (1005455-01) - Includes Items 10 and 19	1
10	N56504	Implement Breakaway Connector - IBBC (AGK163)	1
11	N56502	Harness Apollo Front Trunk - 9m - (AGA5448)	1
12	N64501	X35 WI-FI Adapter - (1018642-01)	1
13	N65056	GPS D Sub Adapter - (1021456-01)	1
14	N53054	CAN Term Bias Circuit (AGK159)	1
15	N65130	Kit - Yellow Gender Changer - Includes (1) N65099 and (2) N65098)	
16	N68947	VDC Jog Wheel Controller (1003393-01) - Optional	1
17	N68948	VDC Controller Bracket (AGA5486) - Optional	1
18	N68949	VDC Harness (1004112-01) - Optional	1
	N58959	VDC Kit (1005089-01) - Includes Items 16, 17 and 18	
	N55985	Ram Arm Mounting Kit - Contains Items (2, 3 & 4)	
19	N72030	Relay - 50A	2
20	N74244	ISO Loop Cap - [9 Pin Amp circular]	1

Tow Behind Air Cart Seed Unit

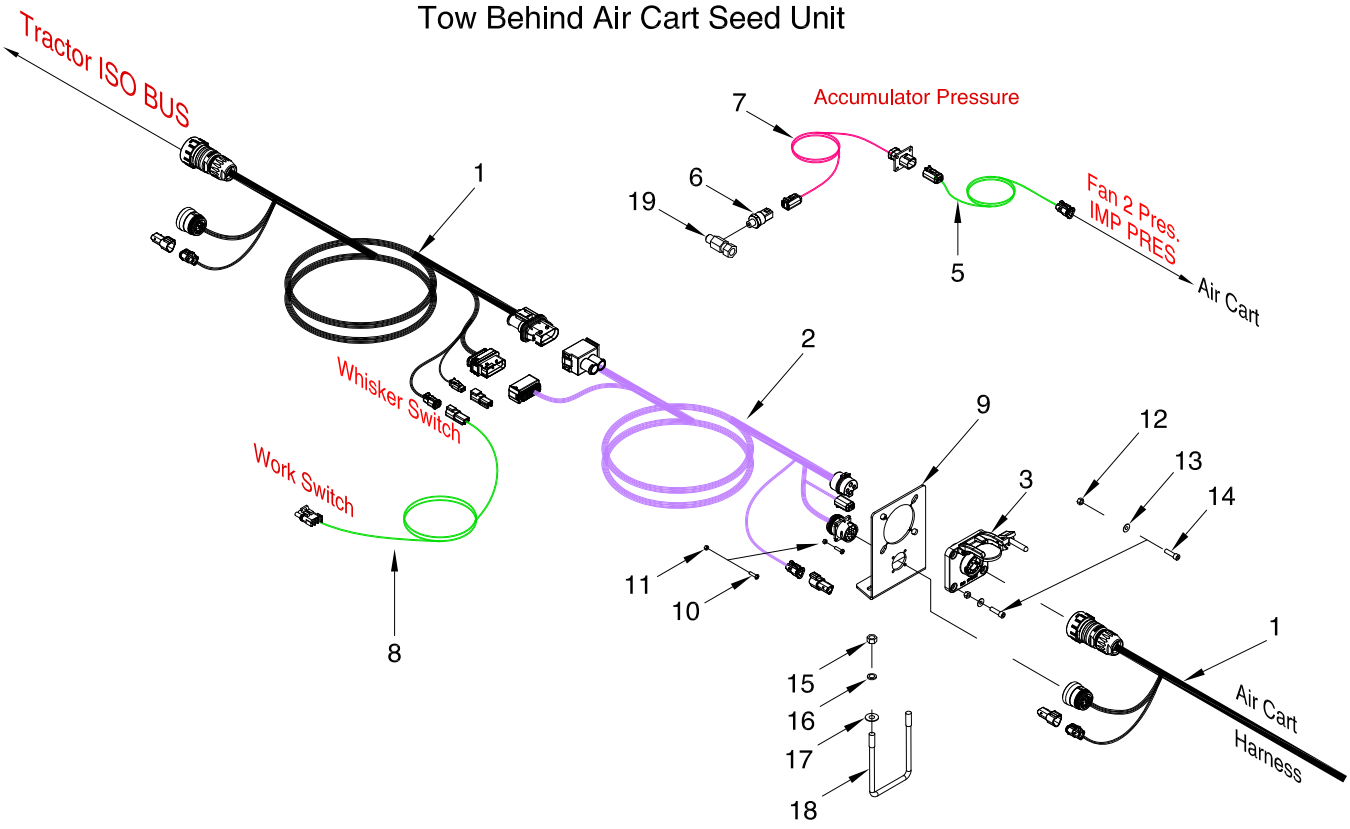

Item	Part No.	Description	Qty
1	N56502	Harness Apollo Front Trunk - 9m - (AGA5448)	1
2	N56503	Harness Apollo Rear Trunk - 9m - (AGA5446)	1
3	N56504	Implement Breakaway Connector - IBBC (AGK163)	1
4	N56513	Harness Extension - 3P Deutsch - 5m - (AGA4472)	1
5	N64670	Harness Extension Adapter - DT06-4S to DT06-3S - 10m - (1024229-01)	1
6	K62977	Pressure Transducer - Accumulator	1
7	N64671	Pressure Transducer Extension Harness - 7m - (1024230-01) (Tow Behind)	1
8	N60323	Harness Adapter - Work Switch - 3m - (1015894-01)	1
9	N60321	Bracket - IBBC Mount	1
10	N29486	Machine Screw - #8 x 5/8 Lg (Phillips Pan Head)	4
11	N16564	Locknut - #8-32 Serrated	4
12	N22778	Locknut - 1/4 Nylon Insert	4
13	N40748	Flat Washer - 17/64 ID x 3/4 OD x 0.062 thick	4
14	N60320	Cap Screw - 1/4 x 7/8 Lg	4
15	W-514	Hex Nut - 3/8	2
16	W-523	Lockwasher - 3/8	2
17	D-5579	Flat Washer - 13/32 ID x 1 OD x 16GA	2
18	N49642	U-Bolt - 3/8 x 3 1/16 x 4 15/16 UL	1
19	K62978	Tee - Gauge Port - 7/8-14 (#10) MJIC x 7/8-14 (#10) FJIC x 7/16-20 (#4) FORB	1

X35 Apollo TopCon System - 2019 to present
Control and Valve Mount



X35 Apollo Control and Valve Mount - 2019 to present

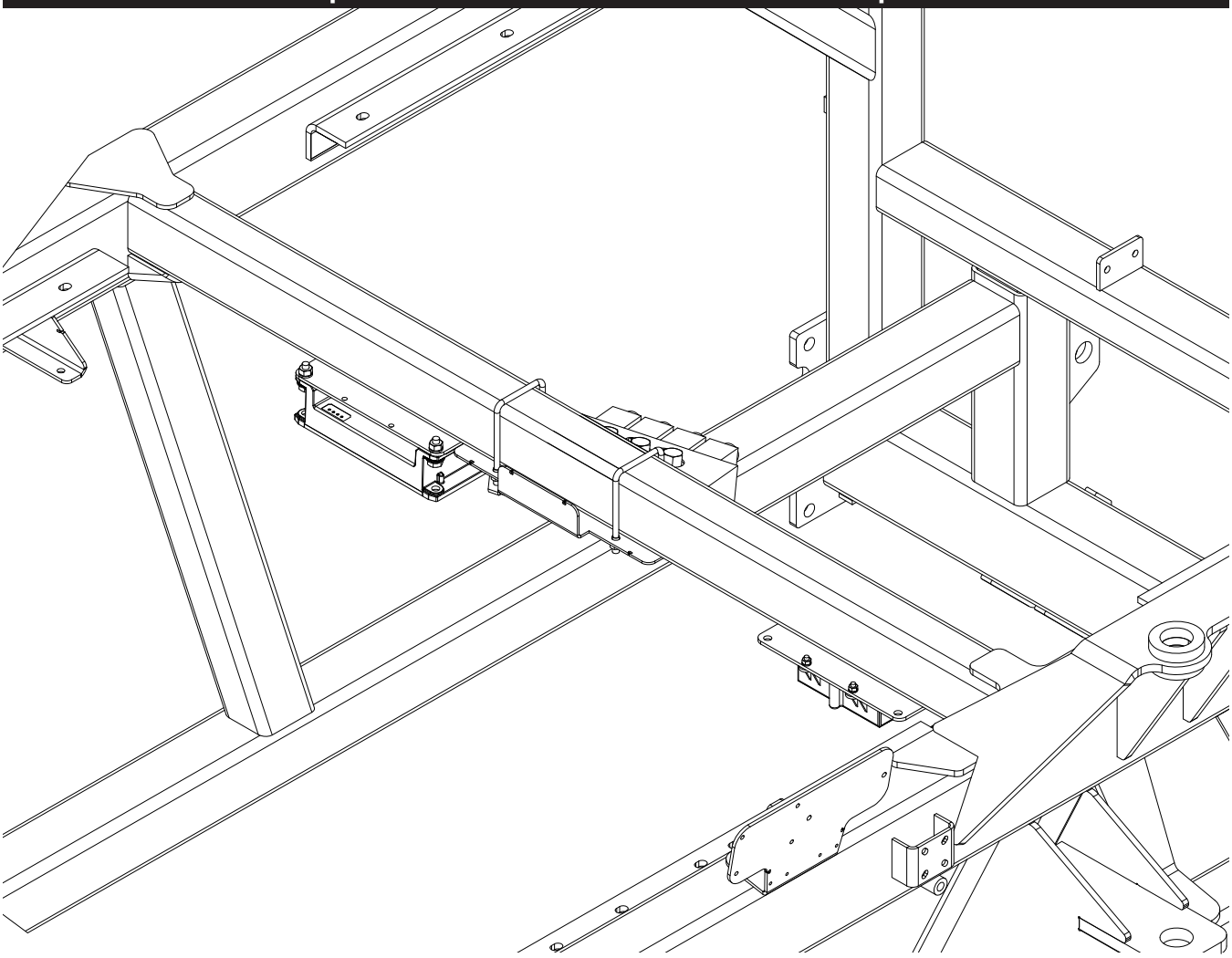

Item	Part No.	Description	Qty
1	N45195	Valve Manifold Assembly **- Prior to 2019**	1
2	N49642	U-Bolt - 3/8 x 3 1/16 x 4 15/16 UL - 9365 to 9650	2
	N19723	U-Bolt - 3/8 x 4 1/16 x 6 15/16 UL - 9800 and 91000	2
3	N68950	Apollo Master Module ECU - CM-40 Series 2 - (1024223-01)	1
4	N53456	Plate - Manifold Mount **- Prior to 2019**	1
5	N53020	Control Box - Wireless Auger Remote	1
8	W-512	Hex Nut - 1/4	6
9	W-514	Hex Nut - 3/8	4
10	W-521	Lockwasher - 1/4	6
11	W-523	Lockwasher - 3/8	4
12	W-469	Hex Head - 1/4 x 3/4 Lg	4
13	W-1847	Hex Bolt - 1/4 x 5 Lg	2
14	S-1198	Flatwasher - 5/16 ID x 3/4 OD x 1/16	2
15	W-187	Hex Bolt - 3/8 x 1 1/4 Lg	4
16	10229	Lock Nut - 3/8	4

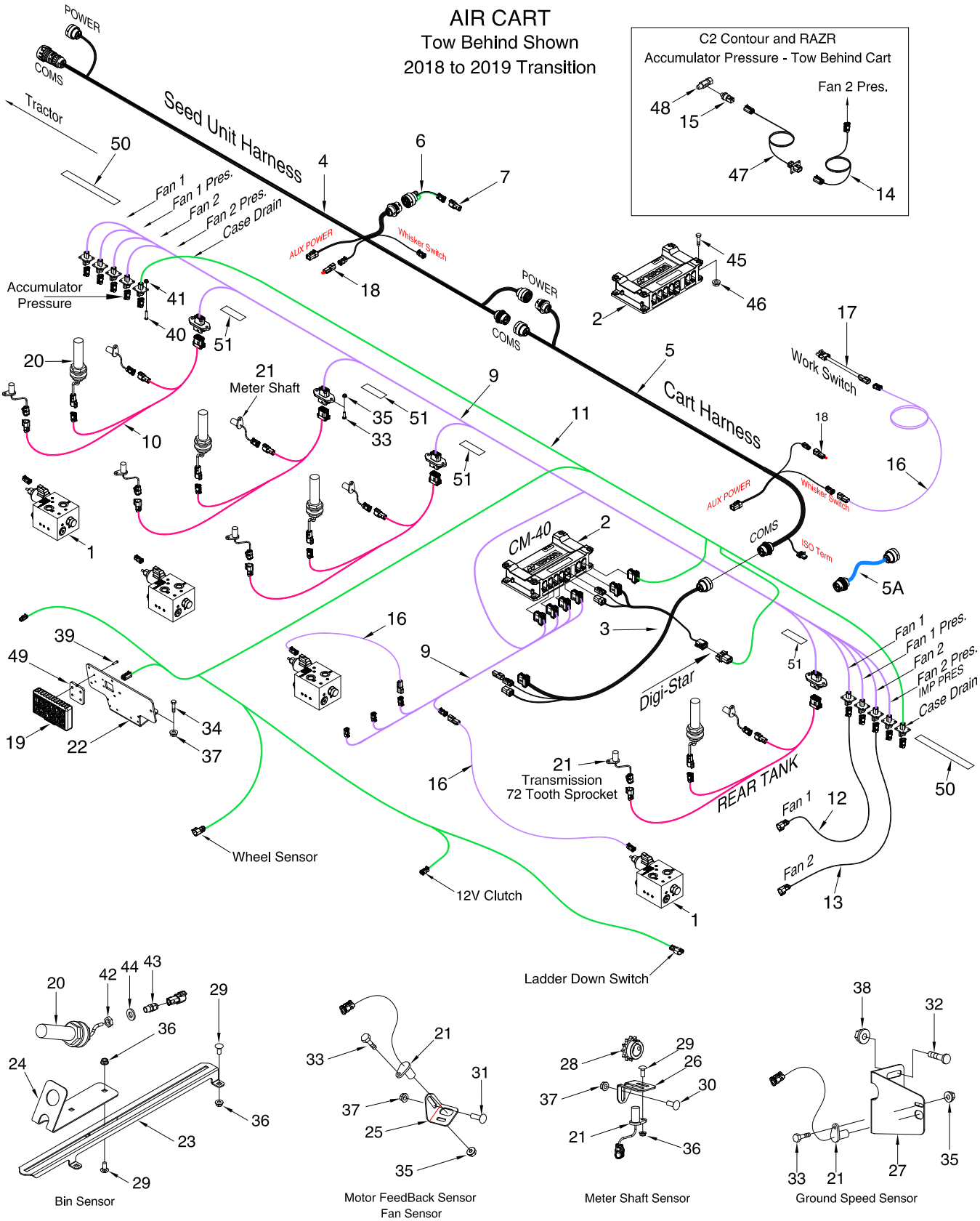
AIR CART
Tow Behind Shown
2018 to 2019 Transition
C2 Contour and RAZR
Accumulator Pressure - Tow Behind Cart
Fan 2 Pres.
48
15
47
14
POWER
COMS
Tractor
50
Seed Unit Harness
4
6
7
Fan 1
Fan 1 Pres.
Fan 2
Fan 2 Pres.
Case Drain
AUX POWER
Whisker Switch
18
Accumulator Pressure
41
40
51
POWER
COMS
2
45
46
17
Work Switch
20
21
Meter Shaft
35
51
33
9
5
Cart Harness
11
10
18
16
AUX POWER
Whisker Switch
COMS
ISO Term
5A
1
CM-40
2
3
16
9
39
49
19
22
34
37
Digi-Star
51
Fan 1
Fan 1 Pres.
Fan 2
Fan 2 Pres.
IMP PRES
Case Drain
50
21
Transmission
72 Tooth Sprocket
REAR TANK
Fan 1
12
Fan 2
13
Wheel Sensor
12V Clutch
1
Ladder Down Switch
20
42
44
43
29
36
24
23
36
29
Bin Sensor
21
33
31
37
25
35
Motor FeedBack Sensor
Fan Sensor
29
28
26
30
37
21
36
Meter Shaft Sensor
38
32
35
33
21
27
Ground Speed Sensor

X35 Apollo Cart Harness - Tow Behind - 2018 to 2019 Transition

Item	Part No.	Description	Qty
		Quantities listed are for a 4 Tank system	
1	N60258	Valve Manifold Assembly	4
2	N68950	Apollo Master Module ECU - CM-40 Series 2 - (1024223-01)	1
3	**N67032**	**Harness Apollo Dual ECU - 4GA - (1005037-01)**	**1**
4	**N67030**	**Harness Apollo Lead Implement - 4GA - (1020151-01)**	**1**
5	**N67031**	**Harness Apollo Trailing Implement - 4GA - (1004998-01)**	**1**
5A	N68000	Harness Extension - 2m - (1028492-01) - Optional	
6	**N67033**	**Harness CAN Loop for ECU Break Out - 4GA - (1005340-01)**	**1**
7	N56519	Terminator Cap - (AGY1355)	1
8	* * * * *		
9	N58110	Harness Backbone Long Chassis - (1005341-01)	1
10	N58111	Harness Tank Adapter - (1005342-01)	4
11	N58112	Harness Auxilary - (1005343-01)	1
12	N56512	Harness Extension - 3P Deutsch - 2m - (AGA4471)	1
13	N56513	Harness Extension - 3P Deutsch - 5m - (AGA4472)	1
14	N64670	Harness Extension Adapter - DT06-4S to DT06-3S - 10m - (1024229-01)	1
15	K62977	Pressure Transducer - Accumulator	1
16	**N59010**	**Harness Extension - Work Switch - 5m - (AGA4468)**	**4**
17	N60323	Harness Adapter - Work Switch - 3m - (1015894-01)	1
18	N59012	Safety Switch Loop	2
19	N56500	Keypad - (AGA5504)	1
20	N56507	Bin Level Sensor - (AGA5478)	4
21	N56511	Proximity Sensor - (1004033-01)	9
22	N55833	Mount Plate - Bolt-On	1
23	N40899	Adjustment Plate	4
24	N34799	Bracket - Bin Level Sensor	4
25	N29296	Fan Sensor Bracket	5
26	N45199	Shaft Sensor Bracket	4
27	N37330	Ground Speed Sensor Bracket - 4 5/8 Lg - 9365, 9450 and 9535	1
	N53664	Ground Speed Sensor Bracket - 6 1/2 Lg - 9445, 9550, 9650, 9800 and 91000	
28	N45198	Sprocket - 40B18 - 3/4 Diameter Bore - VRT	4
	D17946	Sprocket - 40B12 - 1 Diameter Bore - ICT	4
29	D-5259	Carriage Bolt - 5/16 x 3/4 Lg	20
30	P7C616	Carriage Bolt - 3/8 x 1 Lg	4
31	D-5260	Carriage Bolt - 3/8 x 1 1/4 Lg	5
32	D-5265	Carriage Bolt - 1/2 x 1 Lg	2
33	W-469	Hex Bolt - 1/4 x 3/4 Lg	14
34	W-475	Hex Bolt - 3/8 x 1 Lg	2
35	D-5277	Locknut - 1/4 Serrated Flange	14
36	D-5278	Locknut - 5/16 Serrated Flange	20
37	D-5279	Locknut - 3/8 Serrated Flange	15
38	D14565	Locknut - 1/2 Serrated Flange	2
39	N59962	Machine Screw - #10 x 3/4 Lg (Hex Head)	4
40	N29486	Machine Screw - #8 x 5/8 Lg (Phillips Pan Head)	20
41	N16564	Locknut - #8-32 Serrated	20
42	N56748	Bimed Locknut - 1 Per Tank	4
43	N56749	Bimed Cable Gland - 1 Per Tank	4
44	N56750	M-16 Washer - Nitrile Rubber - 1 Per Tank	4
45	W-187	Hex Bolt - 3/8 x 1 1/4 Lg	4
46	10229	Lock Nut - 3/8	4
47	N64671	Pressure Transducer Extension Harness - 7m - (1024230-01) (Tow Behind)	1
48	K62978	Tee - Gauge Port - 7/8-14 (#10) MJIC x 7/8-14 (#10) FJIC x 7/16-20 (#4) FORB	1
49	N56949	Spacer Plate	1
50	N60417	Decal - Plug ID	2
51	N60418	Decal - Harness ID	4
	D-4838	Nylon Tie Strap - 14 1/2 Lg (Black)	AsReq

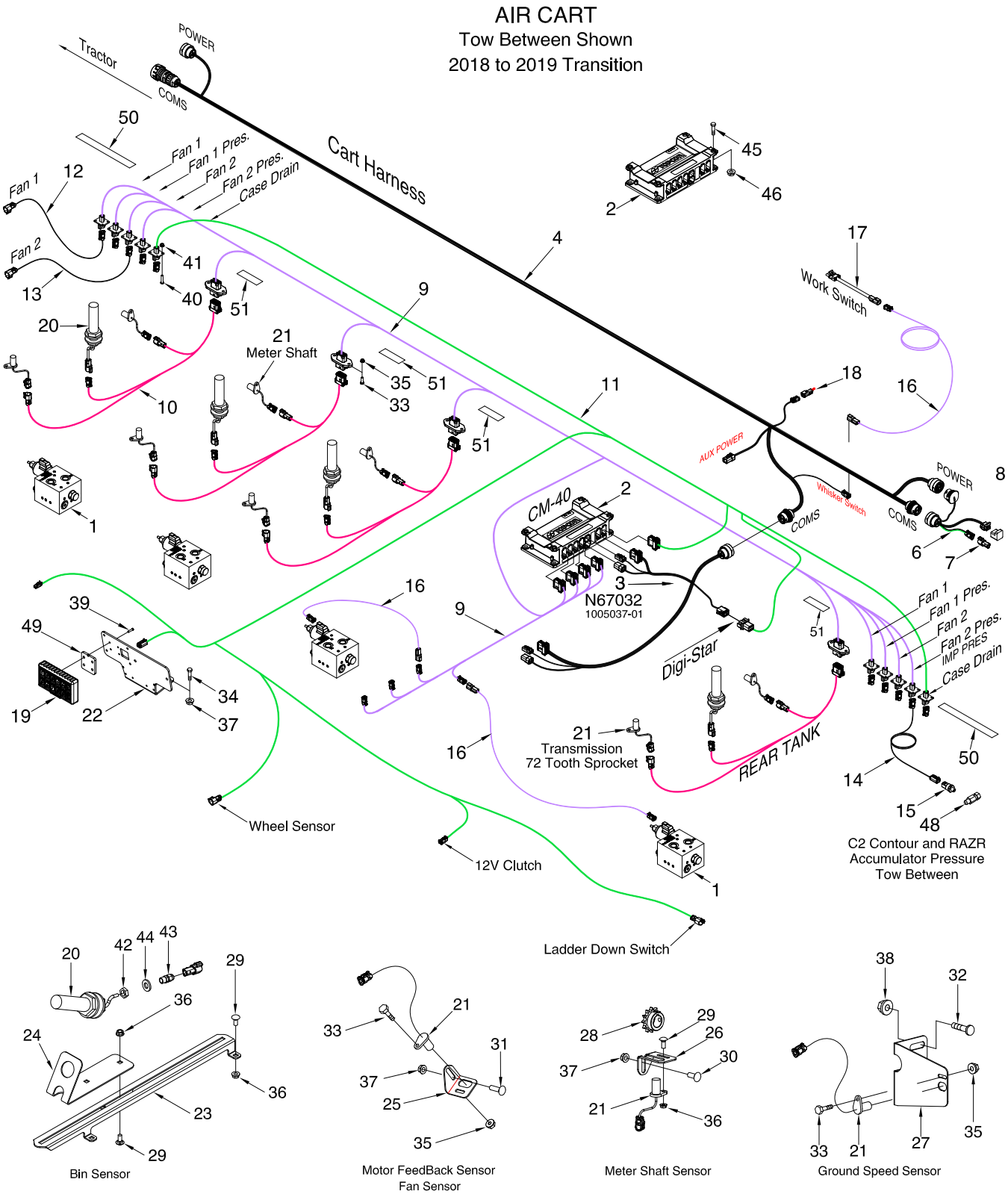
AIR CART
Tow Between Shown
2018 to 2019 Transition
Tractor
POWER
COMS
Cart Harness
Fan 1
Fan 1 Pres.
Fan 2
Fan 2 Pres.
Case Drain
Meter Shaft
Work Switch
AUX POWER
Whisker Switch
CM-40
N67032
1005037-01
Digi-Star
IMP PRES
REAR TANK
Transmission
72 Tooth Sprocket
Wheel Sensor
12V Clutch
Ladder Down Switch
C2 Contour and RAZR
Accumulator Pressure
Tow Between
Bin Sensor
Motor FeedBack Sensor
Fan Sensor
Meter Shaft Sensor
Ground Speed Sensor

X35 Apollo Cart Harness - Tow Between - 2018 to 2019 Transition

Item	Part No.	Description	Qty
		Quantities listed are for a 4 Tank system	
1	N60258	Valve Manifold Assembly	4
2	N68950	Apollo Master Module ECU - CM-40 Series 2 - (1024223-01)	1
3	**N67032**	**Harness Apollo Dual ECU - 4GA - (1005037-01)**	**1**
4	**N67030**	**Harness Apollo Lead Implement - 4GA - (1020151-01)**	**1**
5	* * * * *		
6	**N67615**	**Terminator Loop Cap - Tow Between - (1005028-01)** Includes items 7 and 8	**1**
7	N56519	Terminator Cap - (AGY1355)	1
8	N53054	CAN Term Bias Circuit (AGK159)	1
9	N58110	Harness Backbone Long Chassis - (1005341-01)	1
10	N58111	Harness Tank Adapter - (1005342-01)	4
11	N58112	Harness Auxilary - (1005343-01)	1
12	N56512	Harness Extension - 3P Deutsch - 2m - (AGA4471)	1
13	N56513	Harness Extension - 3P Deutsch - 5m - (AGA4472)	1
14	N64670	Harness Extension Adapter - DT06-4S to DT06-3S - 10m - (1024229-01)	1
15	K62977	Pressure Transducer - Accumulator	1
16	**N59010**	**Harness Extension - Work Switch - 5m - (AGA4468)**	**4**
17	N60323	Harness Adapter - Work Switch - 3m - (1015894-01)	1
18	N59012	Safety Switch Loop	2
19	N56500	Keypad - (AGA5504)	1
20	N56507	Bin Level Sensor - (AGA5478)	4
21	N56511	Proximity Sensor - (1004033-01)	9
22	N55833	Mount Plate - Bolt-On	1
23	N40899	Adjustment Plate	4
24	N34799	Bracket - Bin Level Sensor	4
25	N29296	Fan Sensor Bracket	5
26	N45199	Shaft Sensor Bracket	4
27	N37330	Ground Speed Sensor Bracket - 4 5/8 Lg - 9365, 9450 and 9535	1
	N53664	Ground Speed Sensor Bracket - 6 1/2 Lg - 9445, 9550, 9650, 9800 and 91000	
28	N45198	Sprocket - 40B18 - 3/4 Diameter Bore - VRT	4
	D17946	Sprocket - 40B12 - 1 Diameter Bore - ICT	4
29	D-5259	Carriage Bolt - 5/16 x 3/4 Lg	20
30	P7C616	Carriage Bolt - 3/8 x 1 Lg	4
31	D-5260	Carriage Bolt - 3/8 x 1 1/4 Lg	5
32	D-5265	Carriage Bolt - 1/2 x 1 Lg	2
33	W-469	Hex Bolt - 1/4 x 3/4 Lg	14
34	W-475	Hex Bolt - 3/8 x 1 Lg	2
35	D-5277	Locknut - 1/4 Serrated Flange	14
36	D-5278	Locknut - 5/16 Serrated Flange	20
37	D-5279	Locknut - 3/8 Serrated Flange	15
38	D14565	Locknut - 1/2 Serrated Flange	2
39	N59962	Machine Screw - #10 x 3/4 Lg (Hex Head)	4
40	N29486	Machine Screw - #8 x 5/8 Lg (Phillips Pan Head)	20
41	N16564	Locknut - #8-32 Serrated	20
42	N56748	Bimed Locknut - 1 Per Tank	4
43	N56749	Bimed Cable Gland - 1 Per Tank	4
44	N56750	M-16 Washer - Nitrile Rubber - 1 Per Tank	4
45	W-187	Hex Bolt - 3/8 x 1 1/4 Lg	4
46	10229	Lock Nut - 3/8	4
47	N64671	Pressure Transducer Extension Harness - 7m - (1024230-01) (Tow Behind)	1
48	K62978	Tee - Gauge Port - 7/8-14 (#10) MJIC x 7/8-14 (#10) FJIC x 7/16-20 (#4) FORB	1
49	N56949	Spacer Plate	1
50	N60417	Decal - Plug ID	2
51	N60418	Decal - Harness ID	4
	D-4838	Nylon Tie Strap - 14 1/2 Lg (Black)	AsReq

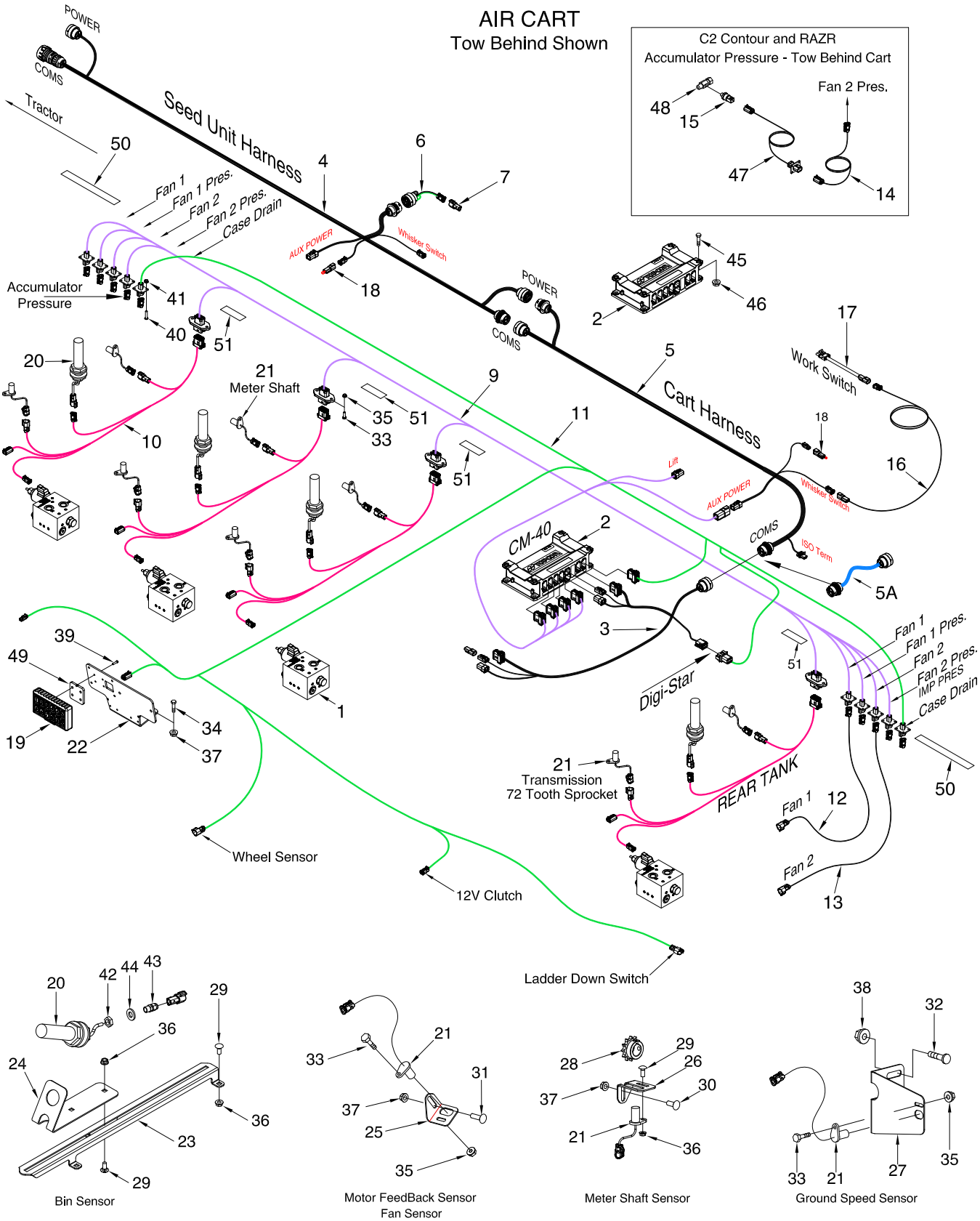
AIR CART
Tow Behind Shown
C2 Contour and RAZR
Accumulator Pressure - Tow Behind Cart
Fan 2 Pres.
48
15
47
14
POWER
COMS
Tractor
50
Seed Unit Harness
4
6
7
Fan 1
Fan 1 Pres.
Fan 2
Fan 2 Pres.
Case Drain
AUX POWER
Whisker Switch
18
Accumulator Pressure
41
40
51
POWER
COMS
2
45
46
17
Work Switch
5
Cart Harness
20
21
Meter Shaft
35
51
33
9
11
10
51
18
16
Lift
AUX POWER
Whisker Switch
CM-40
2
COMS
ISO Term
5A
3
Digi-Star
51
Fan 1
Fan 1 Pres.
Fan 2
Fan 2 Pres.
IMP PRES
Case Drain
50
39
49
19
22
34
37
1
21
Transmission
72 Tooth Sprocket
REAR TANK
Fan 1
12
Fan 2
13
Wheel Sensor
12V Clutch
Ladder Down Switch
20
42
44
43
29
36
24
23
36
29
Bin Sensor
21
33
31
37
25
35
Motor FeedBack Sensor
Fan Sensor
29
28
26
30
37
21
36
Meter Shaft Sensor
38
32
35
33
21
27
Ground Speed Sensor

X35 Apollo Cart Harness - Tow Behind - 2019 to present

Item	Part No.	Description	Qty
		Quantities listed are for a 4 Tank system	
1	N60258	Valve Manifold Assembly	4
2	N68950	Apollo Master Module ECU - CM-40 Series 2 - (1024223-01)	1
3	**N67032**	**Harness Apollo Dual ECU - 4GA - (1005037-01)**	**1**
4	**N67030**	**Harness Apollo Lead Implement - 4GA - (1020151-01)**	**1**
5	**N67031**	**Harness Apollo Trailing Implement - 4GA - (1004998-01)**	**1**
5A	N68000	Harness Extension - 2m - (1028492-01)	1
6	**N67033**	**Harness CAN Loop for ECU Break Out - 4GA - (1005340-01)**	**1**
7	N56519	Terminator Cap - (AGY1355)	1
8	* * * * *		
9	**N67042**	**Harness Backbone Long Chassis - (1026290-01)**	**1**
10	**N67043**	**Harness Tank Adapter - (1026292-01)**	**4**
11	N58112	Harness Auxilary - (1005343-01)	1
12	N56512	Harness Extension - 3P Deutsch - 2m - (AGA4471)	1
13	N56513	Harness Extension - 3P Deutsch - 5m - (AGA4472)	1
14	N64670	Harness Extension Adapter - DT06-4S to DT06-3S - 10m - (1024229-01)	1
15	K62977	Pressure Transducer - Accumulator	1
16	N59010	Harness Extension - Work Switch - 5m - (AGA4468)	1
17	N60323	Harness Adapter - Work Switch - 3m - (1015894-01)	1
18	N59012	Safety Switch Loop	2
19	N56500	Keypad - (AGA5504)	1
20	N56507	Bin Level Sensor - (AGA5478)	4
21	N56511	Proximity Sensor - (1004033-01)	9
22	N55833	Mount Plate - Bolt-On	1
23	N40899	Adjustment Plate	4
24	N34799	Bracket - Bin Level Sensor	4
25	N29296	Fan Sensor Bracket	5
26	N45199	Shaft Sensor Bracket	4
27	N37330	Ground Speed Sensor Bracket - 4 5/8 Lg - 9365, 9450 and 9535	1
	N53664	Ground Speed Sensor Bracket - 6 1/2 Lg - 9445, 9550, 9650, 9800 and 91000	
28	N45198	Sprocket - 40B18 - 3/4 Diameter Bore - VRT	4
	D17946	Sprocket - 40B12 - 1 Diameter Bore - ICT	4
29	D-5259	Carriage Bolt - 5/16 x 3/4 Lg	20
30	P7C616	Carriage Bolt - 3/8 x 1 Lg	4
31	D-5260	Carriage Bolt - 3/8 x 1 1/4 Lg	5
32	D-5265	Carriage Bolt - 1/2 x 1 Lg	2
33	W-469	Hex Bolt - 1/4 x 3/4 Lg	14
34	W-475	Hex Bolt - 3/8 x 1 Lg	2
35	D-5277	Locknut - 1/4 Serrated Flange	14
36	D-5278	Locknut - 5/16 Serrated Flange	20
37	D-5279	Locknut - 3/8 Serrated Flange	15
38	D14565	Locknut - 1/2 Serrated Flange	2
39	N59962	Machine Screw - #10 x 3/4 Lg (Hex Head)	4
40	N29486	Machine Screw - #8 x 5/8 Lg (Phillips Pan Head)	20
41	N16564	Locknut - #8-32 Serrated	20
42	N56748	Bimed Locknut - 1 Per Tank	4
43	N56749	Bimed Cable Gland - 1 Per Tank	4
44	N56750	M-16 Washer - Nitrile Rubber - 1 Per Tank	4
45	W-187	Hex Bolt - 3/8 x 1 1/4 Lg	4
46	10229	Lock Nut - 3/8	4
47	N64671	Pressure Transducer Extension Harness - 7m - (1024230-01) (Tow Behind)	1
48	K62978	Tee - Gauge Port - 7/8-14 (#10) MJIC x 7/8-14 (#10) FJIC x 7/16-20 (#4) FORB	1
49	N56949	Spacer Plate	1
50	N60417	Decal - Plug ID	2
51	N60418	Decal - Harness ID	4
	D-4838	Nylon Tie Strap - 14 1/2 Lg (Black)	AsReq

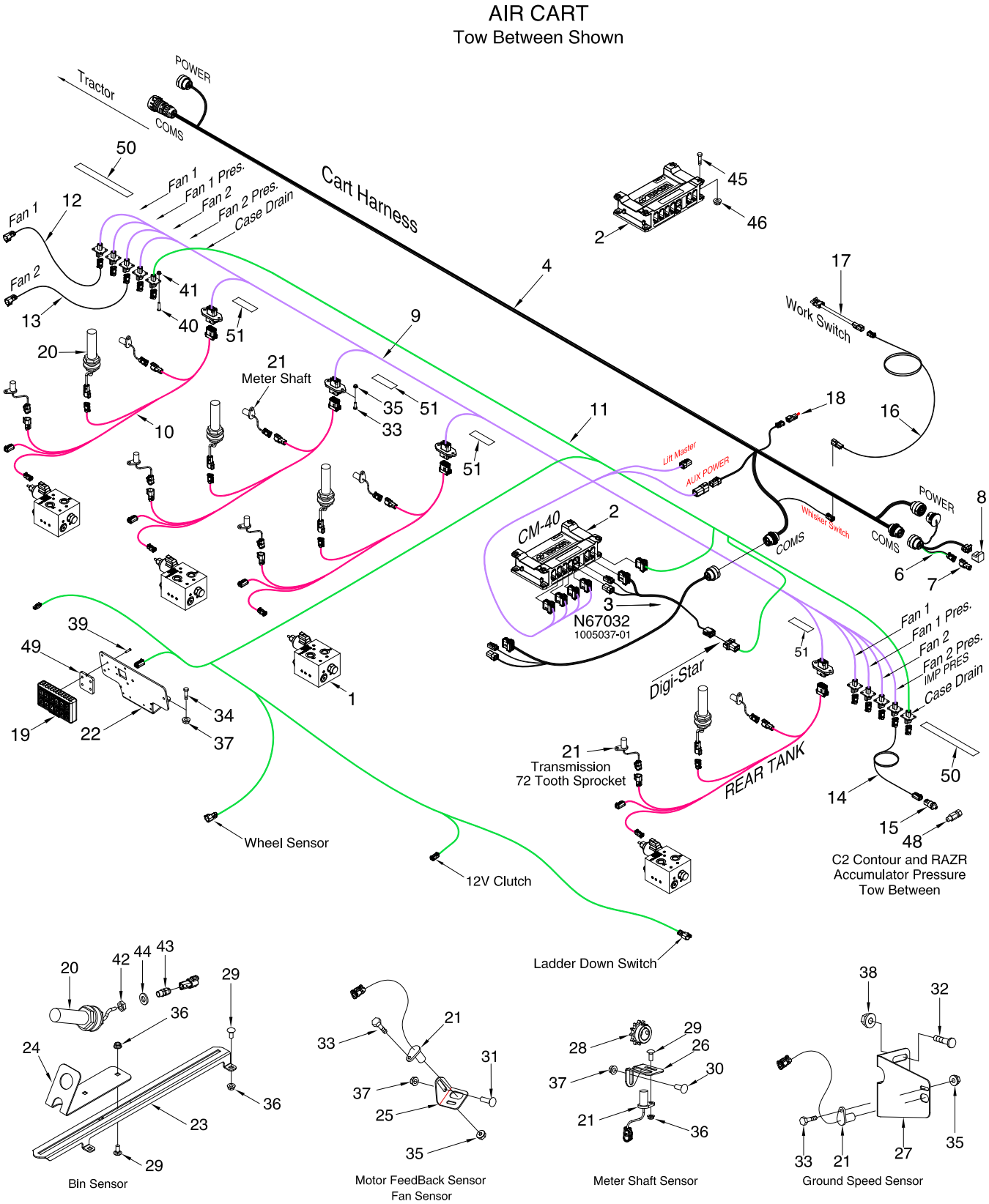
AIR CART
Tow Between Shown
Tractor
POWER
COMS
Cart Harness
Fan 1
Fan 1 Pres.
Fan 2
Fan 2 Pres.
Case Drain
50
12
41
40
51
13
20
21
Meter Shaft
35
33
9
10
11
4
45
46
2
17
Work Switch
18
16
Lift Master
AUX POWER
Whisker Switch
CM-40
N67032
1005037-01
3
8
6
7
39
49
19
22
34
37
1
Digi-Star
IMP PRES
REAR TANK
14
15
48
C2 Contour and RAZR
Accumulator Pressure
Tow Between
Transmission
72 Tooth Sprocket
Wheel Sensor
12V Clutch
Ladder Down Switch
42
44
43
29
36
24
23
Bin Sensor
31
25
Motor FeedBack Sensor
Fan Sensor
28
26
30
Meter Shaft Sensor
38
32
27
Ground Speed Sensor

X35 Apollo Cart Harness - Tow Between - 2019 to present

Item	Part No.	Description	Qty
		Quantities listed are for a 4 Tank system	
1	N60258	Valve Manifold Assembly	4
2	N68950	Apollo Master Module ECU - CM-40 Series 2 - (1024223-01)	1
3	**N67032**	**Harness Apollo Dual ECU - 4GA - (1005037-01)**	**1**
4	**N67030**	**Harness Apollo Lead Implement - 4GA - (1020151-01)**	**1**
5	* * * * *		
6	**N67615**	**Terminator Loop Cap - Tow Between - (1005028-01)** Includes items 7 and 8	**1**
7	N56519	Terminator Cap - (AGY1355)	1
8	N53054	CAN Term Bias Circuit (AGK159)	1
9	**N67042**	**Harness Backbone Long Chassis - (1026290-01)**	**1**
10	**N67043**	**Harness Tank Adapter - (1026292-01)**	**4**
11	N58112	Harness Auxilary - (1005343-01)	1
12	N56512	Harness Extension - 3P Deutsch - 2m - (AGA4471)	1
13	N56513	Harness Extension - 3P Deutsch - 5m - (AGA4472)	1
14	N64670	Harness Extension Adapter - DT06-4S to DT06-3S - 10m - (1024229-01)	1
15	K62977	Pressure Transducer - Accumulator	1
16	N59010	Harness Extension - Work Switch - 5m - (AGA4468)	1
17	N60323	Harness Adapter - Work Switch - 3m - (1015894-01)	1
18	N59012	Safety Switch Loop	2
19	N56500	Keypad - (AGA5504)	1
20	N56507	Bin Level Sensor - (AGA5478)	4
21	N56511	Proximity Sensor - (1004033-01)	9
22	N55833	Mount Plate - Bolt-On	1
23	N40899	Adjustment Plate	4
24	N34799	Bracket - Bin Level Sensor	4
25	N29296	Fan Sensor Bracket	5
26	N45199	Shaft Sensor Bracket	4
27	N37330	Ground Speed Sensor Bracket - 4 5/8 Lg - 9365, 9450 and 9535	1
	N53664	Ground Speed Sensor Bracket - 6 1/2 Lg - 9445, 9550, 9650, 9800 and 91000	
28	N45198	Sprocket - 40B18 - 3/4 Diameter Bore - VRT	4
	D17946	Sprocket - 40B12 - 1 Diameter Bore - ICT	4
29	D-5259	Carriage Bolt - 5/16 x 3/4 Lg	20
30	P7C616	Carriage Bolt - 3/8 x 1 Lg	4
31	D-5260	Carriage Bolt - 3/8 x 1 1/4 Lg	5
32	D-5265	Carriage Bolt - 1/2 x 1 Lg	2
33	W-469	Hex Bolt - 1/4 x 3/4 Lg	14
34	W-475	Hex Bolt - 3/8 x 1 Lg	2
35	D-5277	Locknut - 1/4 Serrated Flange	14
36	D-5278	Locknut - 5/16 Serrated Flange	20
37	D-5279	Locknut - 3/8 Serrated Flange	15
38	D14565	Locknut - 1/2 Serrated Flange	2
39	N59962	Machine Screw - #10 x 3/4 Lg (Hex Head)	4
40	N29486	Machine Screw - #8 x 5/8 Lg (Phillips Pan Head)	20
41	N16564	Locknut - #8-32 Serrated	20
42	N56748	Bimed Locknut - 1 Per Tank	4
43	N56749	Bimed Cable Gland - 1 Per Tank	4
44	N56750	M-16 Washer - Nitrile Rubber - 1 Per Tank	4
45	W-187	Hex Bolt - 3/8 x 1 1/4 Lg	4
46	10229	Lock Nut - 3/8	4
47	N64671	Pressure Transducer Extension Harness - 7m - (1024230-01) (Tow Behind)	1
48	K62978	Tee - Gauge Port - 7/8-14 (#10) MJIC x 7/8-14 (#10) FJIC x 7/16-20 (#4) FORB	1
49	N56949	Spacer Plate	1
50	N60417	Decal - Plug ID	2
51	N60418	Decal - Harness ID	4
	D-4838	Nylon Tie Strap - 14 1/2 Lg (Black)	AsReq

ICT System

Tow Behind Shown

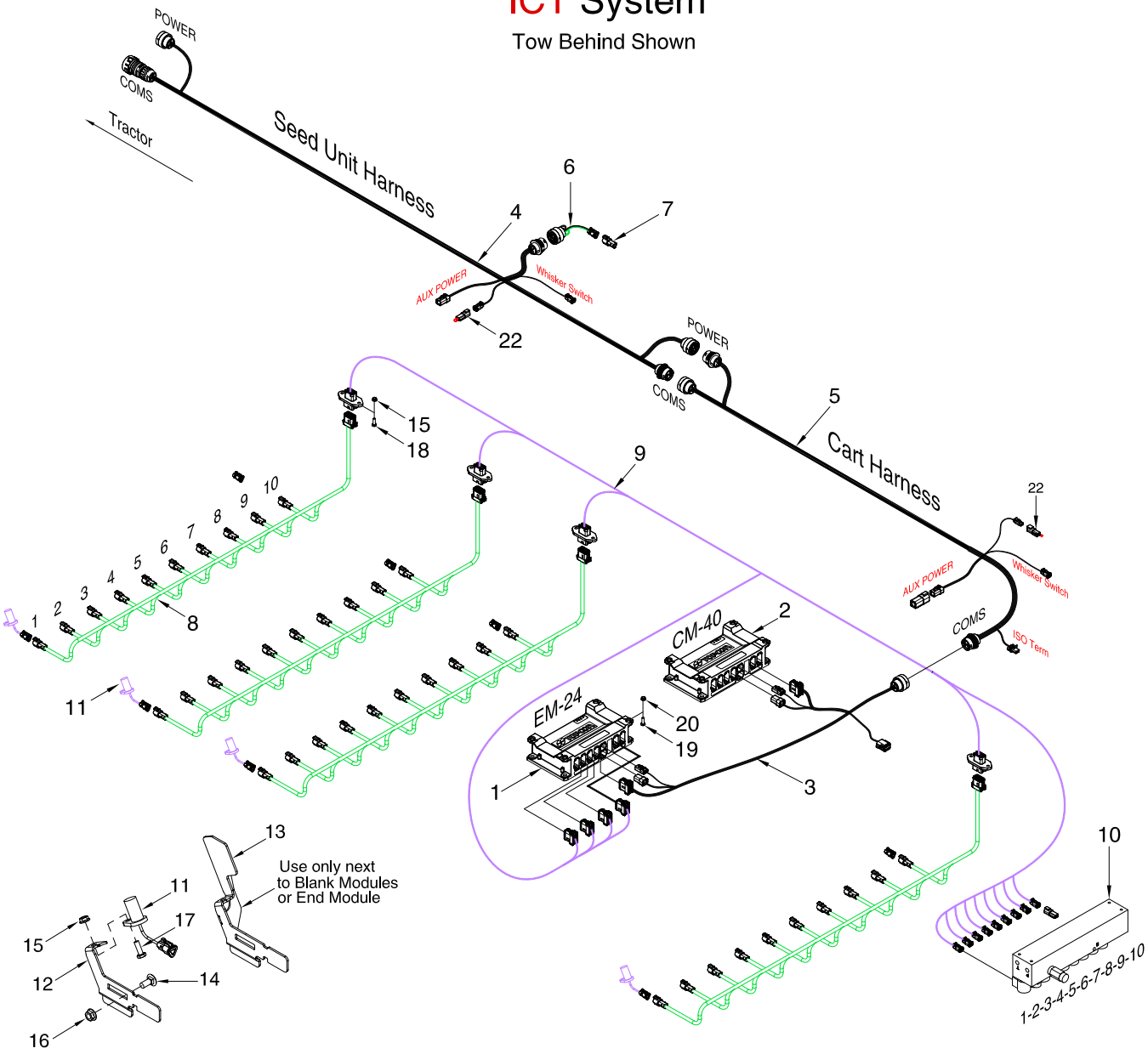

X35 Apollo ICT System - Tow Behind - 2019 to present

Item	Part No.	Description	Qty
		Quantities listed are for a 4 Tank 10 run system	
1	N55951	Apollo I/O Module ECU - EM-24 - (AGA5360)	1
2	N68950	Apollo Master Module ECU - CM-40 Series 2 - (1024223-01)	1
3	**N67032**	**Harness Apollo Dual ECU - 4GA - (1005037-01)**	**1**
4	**N67030**	**Harness Apollo Lead Implement - 4GA - (1020151-01)**	**1**
5	**N67031**	**Harness Apollo Trailing Implement - 4GA - (1004998-01)**	**1**
6	**N67033**	**Harness CAN Loop for ECU Break Out - 4GA - (1005340-01)**	**1**
7	N56519	Terminator Cap - (AGY1355)	1
8	N58113	Harness ICT Input Adapter - (1005344-01)	4
9	N58114	Harness ICT Backbone - (1005345-01)	1
10	N58320	ICT Control Valve	1
11	N56511	Proximity Sensor - (1004033-01)	40
12	N64789	Sensor Bracket	36
13	N55192	Meter Shaft Stop	AsReq
14	D-5259	Carriage Bolt - 5/16 x 3/4 Lg	40
15	D-5277	Locknut - 1/4 Serrated Flange	54
16	D-5278	Locknut - 5/16 Serrated Flange	40
17	N36597	Hex Bolt - 1/4 x 3/4 Lg Stainless Steel	40
18	W-469	Hex Bolt - 1/4 x 3/4 Lg	14
19	W-187	Hex Bolt - 3/8 x 1 1/4 Lg - Bolts ECUs together	4
20	D-5279	Locknut - 3/8 Serrated Flange	11
21	D-4838	Nylon Tie Strap - 14 1/2 Lg (Black)	AsReq
22	N59012	Safety Switch Loop	2

ICT System

Tow Between Shown

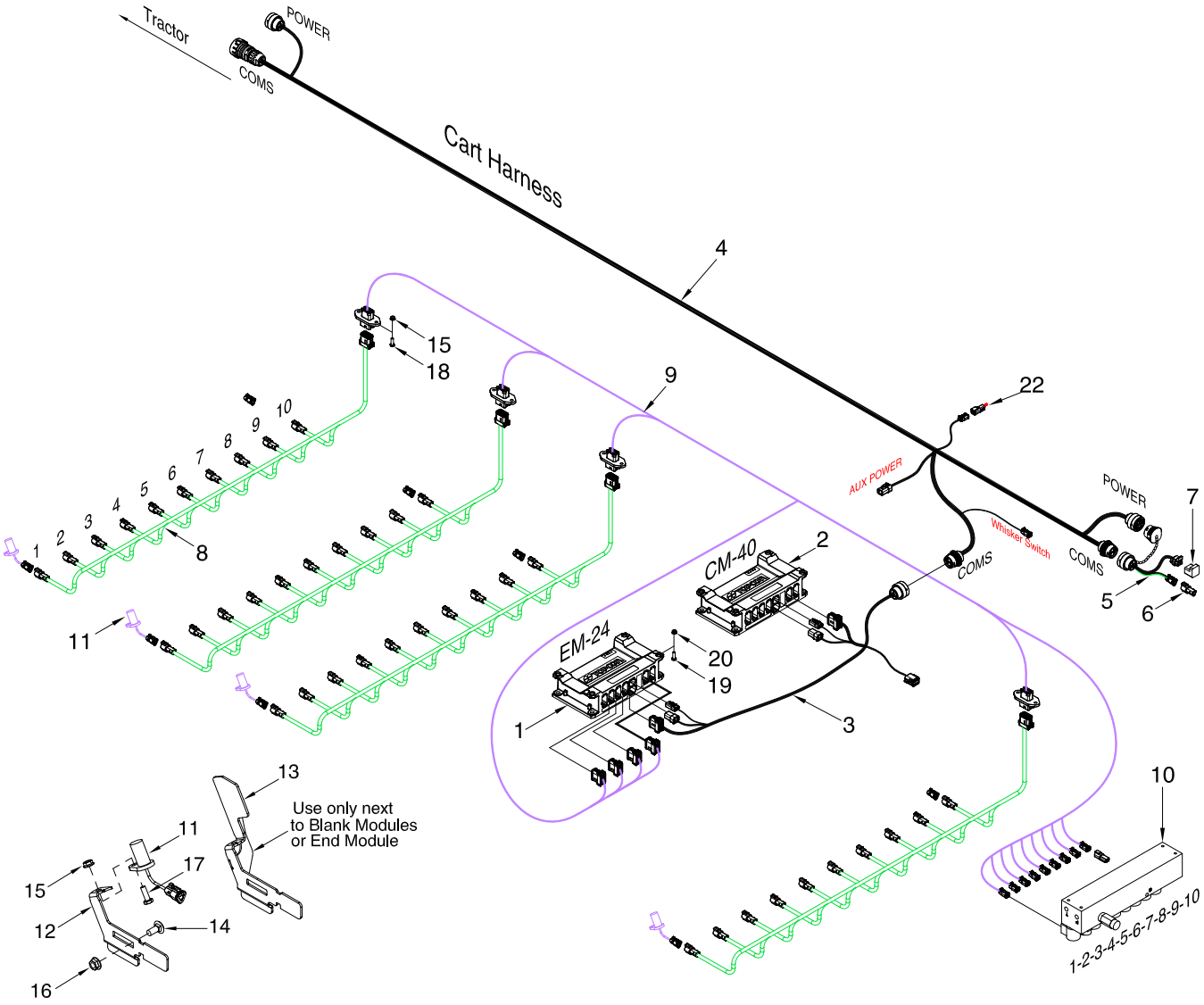

X35 Apollo ICT System - Tow Between - 2019 to present			
Item	**Part No.**	**Description**	**Qty**
		Quantities listed are for a 4 Tank 10 run system	
1	N55951	Apollo I/O Module ECU - EM-24 - (AGA5360)	1
2	N68950	Apollo Master Module ECU - CM-40 Series 2 - (1024223-01)	1
3	**N67032**	**Harness Apollo Dual ECU - 4GA - (1005037-01)**	**1**
4	**N67030**	**Harness Apollo Lead Implement - 4GA - (1020151-01)**	**1**
5	**N67615**	**Terminator Loop Cap - Tow Between - (1005028-01)** Includes items 6 and 7	**1**
6	N56519	Terminator Cap - (AGY1355)	1
7	N53054	CAN Term Bias Circuit (AGK159)	1
8	N58113	Harness ICT Input Adapter - (1005344-01)	4
9	N58114	Harness ICT Backbone - (1005345-01)	1
10	N58320	ICT Control Valve	1
11	N56511	Proximity Sensor - (1004033-01)	40
12	N64789	Sensor Bracket	36
13	N55192	Meter Shaft Stop	AsReq
14	D-5259	Carriage Bolt - 5/16 x 3/4 Lg	40
15	D-5277	Locknut - 1/4 Serrated Flange	54
16	D-5278	Locknut - 5/16 Serrated Flange	40
17	N36597	Hex Bolt - 1/4 x 3/4 Lg Stainless Steel	40
18	W-469	Hex Bolt - 1/4 x 3/4 Lg	14
19	W-187	Hex Bolt - 3/8 x 1 1/4 Lg - Bolts ECUs together	4
20	D-5279	Locknut - 3/8 Serrated Flange	11
21	D-4838	Nylon Tie Strap - 14 1/2 Lg (Black)	AsReq
22	N59012	Safety Switch Loop	2

X35 Apollo TopCon System - 2019 to present
Tractor without ISO BUS - X35 Installation

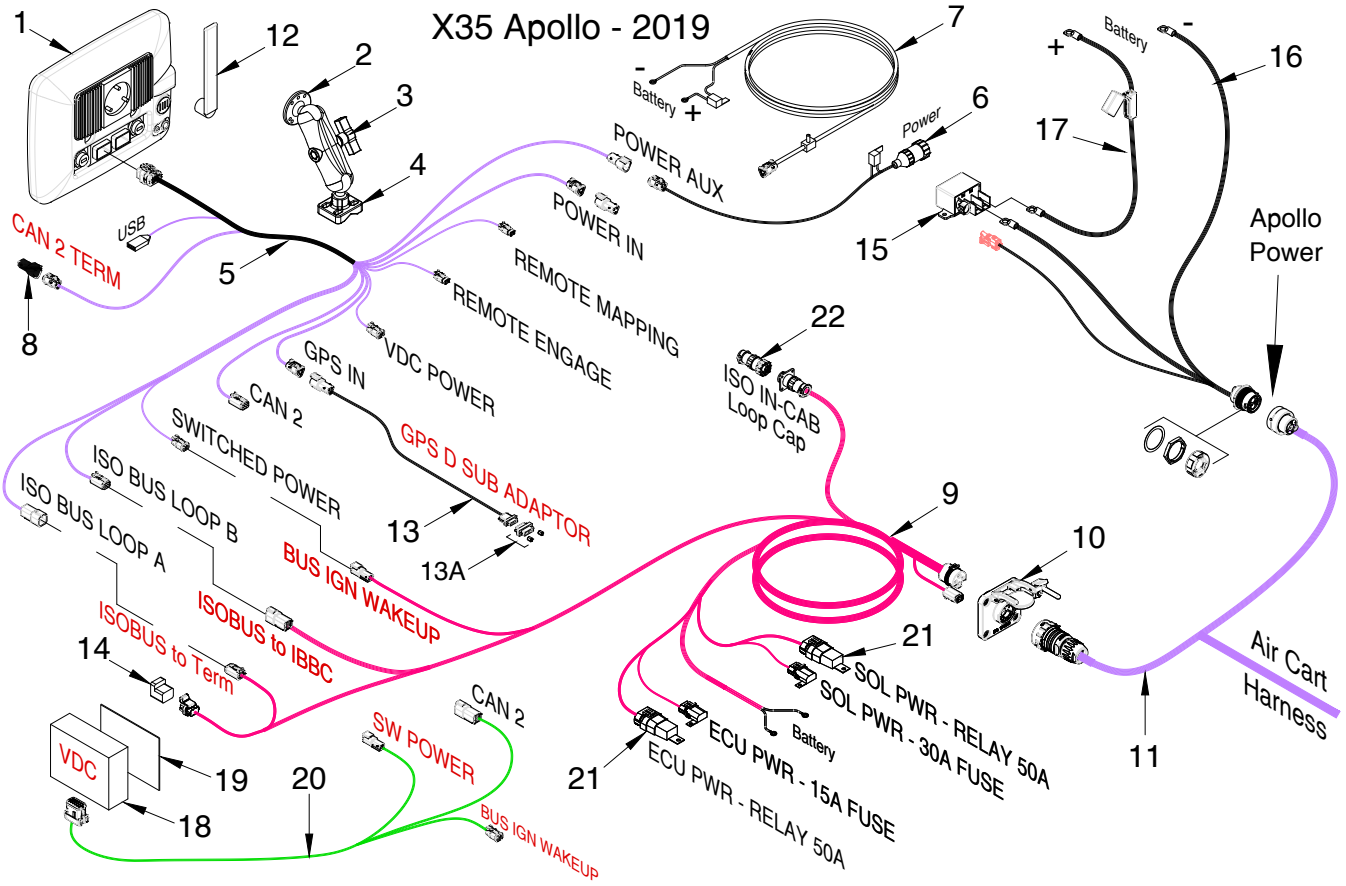

Item	Part No.	Description	Qty
1	N64500	X35 Console (1007188-01) - Includes Ram Mount Items (2, 3 & 4)	1
	N55985	Ram Arm Mounting Kit - Contains Items (2, 3 & 4)	
2	N55984	Ram Mounting Ball - Circular Base	1
3	K45686	Ram Mounting Arm - 5"	1
4	K45685	Ram Mount Base - U-Bolt	1
5	N64502	Harness - Topcon X35 Power/Comms (1019154-01)	1
6	N62370	Harness - X30 Power (AGA5246)	1
7	N62371	Harness - X30 Power (1006970-01) - Optional	
8	N56519	Terminator Cap - (AGY1355)	1
9	N58965	Harness - GEN 2 LITE (1005455-01) - Includes Items 10, 18 and 19	1
10	N56504	Implement Breakaway Connector - IBBC (AGK163)	1
11	N67030	Harness Apollo Lead Implement - 4GA - (1020151-01)	1
12	N64501	X35 WI-FI Adapter - (1018642-01)	1
13	N65056	GPS D Sub Adapter - (1021456-01)	1
13A	N65130	Kit - Yellow Gender Changer - Includes (1) N65099 and (2) N65098)	
14	N53054	CAN Term Bias Circuit (AGK159)	1
15	N67034	High Current Relay (1004269-01)	1
16	N67035	Harness - Power - 4GA (1004987-01)	1
17	N67036	Battery Cable - Fused - 4GA (1004955-01) - (100 AMP Fuse N72320)	1
18	N72030	Relay - 50A	2
19	N74244	ISO Loop Cap - [9 Pin Amp circular]	1
20	N68947	VDC Jog Wheel Controller (1003393-01) - Optional	1
21	N68948	VDC Controller Bracket (AGA5486) - Optional	1
22	N68949	VDC Harness (1004112-01) - Optional	1
	N58959	VDC Kit (1005089-01) - Includes Items 20, 21 and 22	

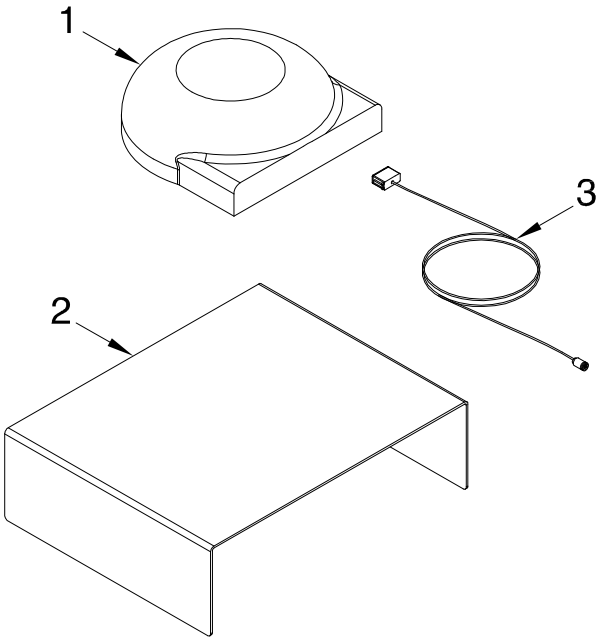

Item	Part No.	Description	Qty
1	N56900	AGI-4 Receiver (01-104701-01)	1
2	N58100	AGI-4 Roof Bracket Universal (1001005-01)	1
3	N58101	AGI-4 Roof Harness (AGA5250)	1
	N56904	Kit - AGI-4 Receiver (Includes Above Items)	
	N68003	ZTN50166 - CNH GPS Cable - (Not Shown)	
	N68004	PFP10470 - JOHN DEERE Cable Kit - (Not Shown)	
	N68005	SGR-1 X35 GPS Harness - (AGA4286) - (Not Shown)	

QUANTUM
Apollo - Lift and Pressure Control Kit

Kit for 2-3 Tank Carts (N67052)

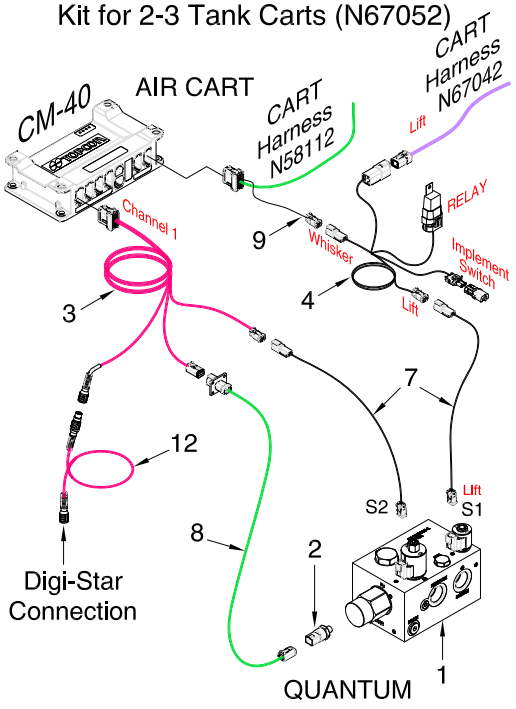

Kit for 4 Tank Carts (N67051)

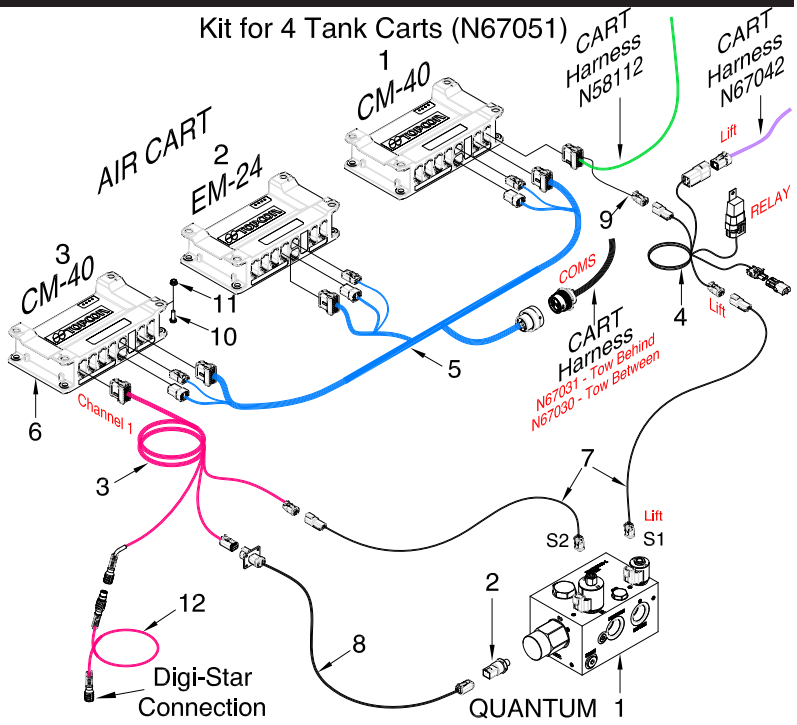

Kit N67798

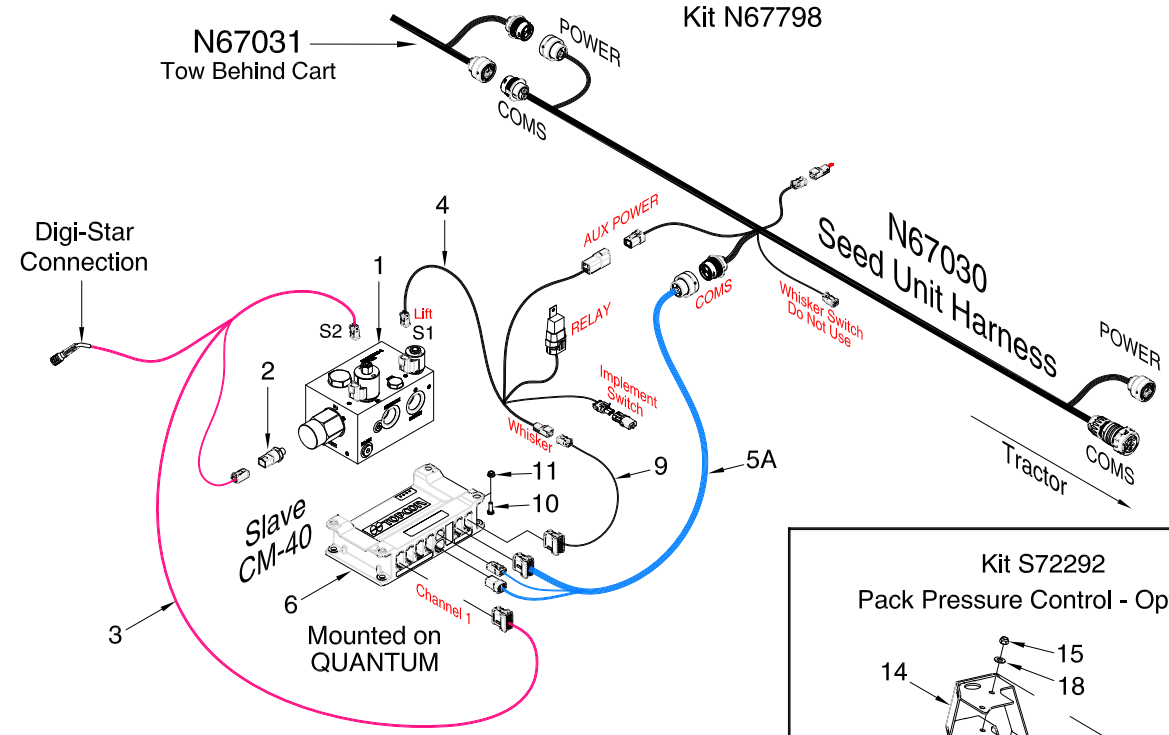

Kit S72292
Pack Pressure Control - Optional

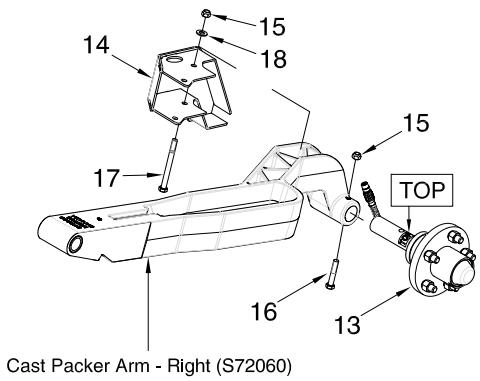

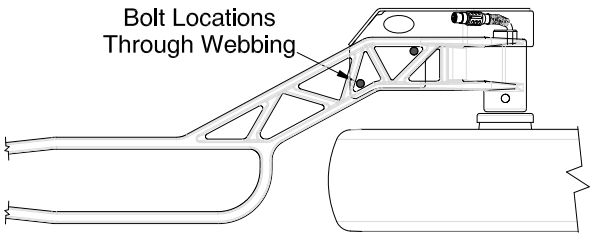

Apollo - Lift and Pressure Control Kit

Item	Part No.	Description	Qty
1	S64940	Manifold - Opener Control (Requires S68007 see note below)	1
	S68006	Manifold - Opener Control - 2000 psi (Includes S68007)	
2	K62977	Pressure Transducer	1
3	N67045	Harness - Pack Control (1026291-01)	1
4	N67046	Harness - Lift Control (1006258-01)	1
5	N67037	Harness - Triplex ECU Adapter (1005038-01)	1
5A	N67038	Harness - Single ECU (1005036-01)	1
5B	N68000	Harness Extension - 2m - (1028492-01) - Optional	
6	N68950	Apollo Master Module ECU - CM-40 Series 2 - (1024223-01)	1
7	N59010	Harness Extension - Work Switch - 5m - (AGA4468)	2
8	N64671	Pressure Transducer Extension Harness - 7m - (1024230-01)	1
9	N68001	AUX Lift Lower Signal Adapter	1
10	W-187	Hex Bolt - 3/8 x 1 1/4 Lg - Bolts ECU to plate under manifold	4
11	D-5279	Locknut - 3/8 Serrated Flange	4
12	N68002	Extension Cable - Pack Control	1
	N67052	Lift and Pressure Control Kit for 2-3 Tank Carts (Includes Items 3, 4, 7, 8, 9, 12)	
	N67051	Lift and Pressure Control Kit for 4 Tank Carts (Includes Items 3, 4, 5, 6, 7, 8, 9, 12)	
	N67798	Lift and Pressure Control Kit for 4 Tank Carts Tow Behind ONLY (Includes Items 3, 4, 5A, 6, 9, 10,11)	
		Pack Pressure Control - Option	
	S72292	Pack Force Spindle and Guard Kit. (Includes ALL Items below) - 2022 to Present	
13	S72190	Packer Hub Assembly (Includes S72200 Spindle - Digi-Star)	1
14	S72094	Guard -Pack Control - Cast Arm - Right	1
15	M-3388	Lock Nut - 3/8 Unitorque	1
16	W-480	Hex Bolt - 3/8 x 2 1/2 Lg	1
17	C-1550	Hex Bolt - 3/8 x 4 Lg	4
18	D-5489	Washer - 13/32 ID x 13/16 OD x 16 GA	4
		See QUANTUM Parts Book for Pack Pressure Control Kits prior to 2022.	

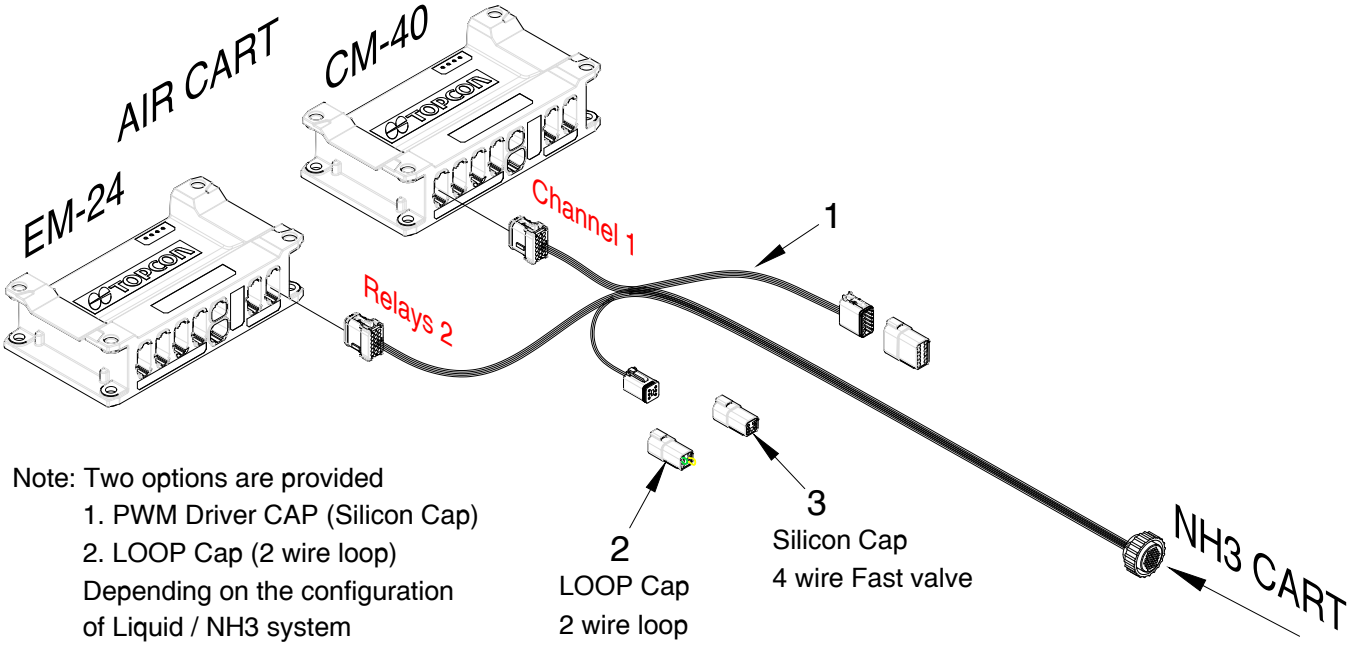

Note: Two options are provided
1. PWM Driver CAP (Silicon Cap)
2. LOOP Cap (2 wire loop)
Depending on the configuration of Liquid / NH3 system

2
LOOP Cap
2 wire loop
PWM Valve
Standard Valve
2 wire Fast valve

3
Silicon Cap
4 wire Fast valve

Item	Part No.	Description	Qty
1	N58776	Morris Liquid Sectional Control Cable - (1005496-01)	1
2	N60945	LOOP Cap	1
3	N74245	PWM Silicone Driver Cap - (1004544-01) - Raven Fast Valve	1

Section 20:
Lighting and Safety Signs

Section Contents

Light Harness Connections 20-2
Work Lights 20-3
Marking Lights 20-4
Auger Lights and Full Tank Indicator - Prior to 2016 20-6
Auger Lights and Full Tank Indicator - 2016 to Present 20-8
Stair Down Warning Light - Ladder Mount - Prior to 2016 20-11
Stair Down Warning Light - Frame Mount 20-12
SMV Sign 20-13
Safety Signs 20-14
- Decals 20-14
- Front 20-16
- Rear 20-17
- Left Side - Tow Between 20-18
- Right Side - Tow Between 20-19
- Left Side - Tow Behind 20-20
- Right Side - Tow Behind 20-21
- Top 20-22

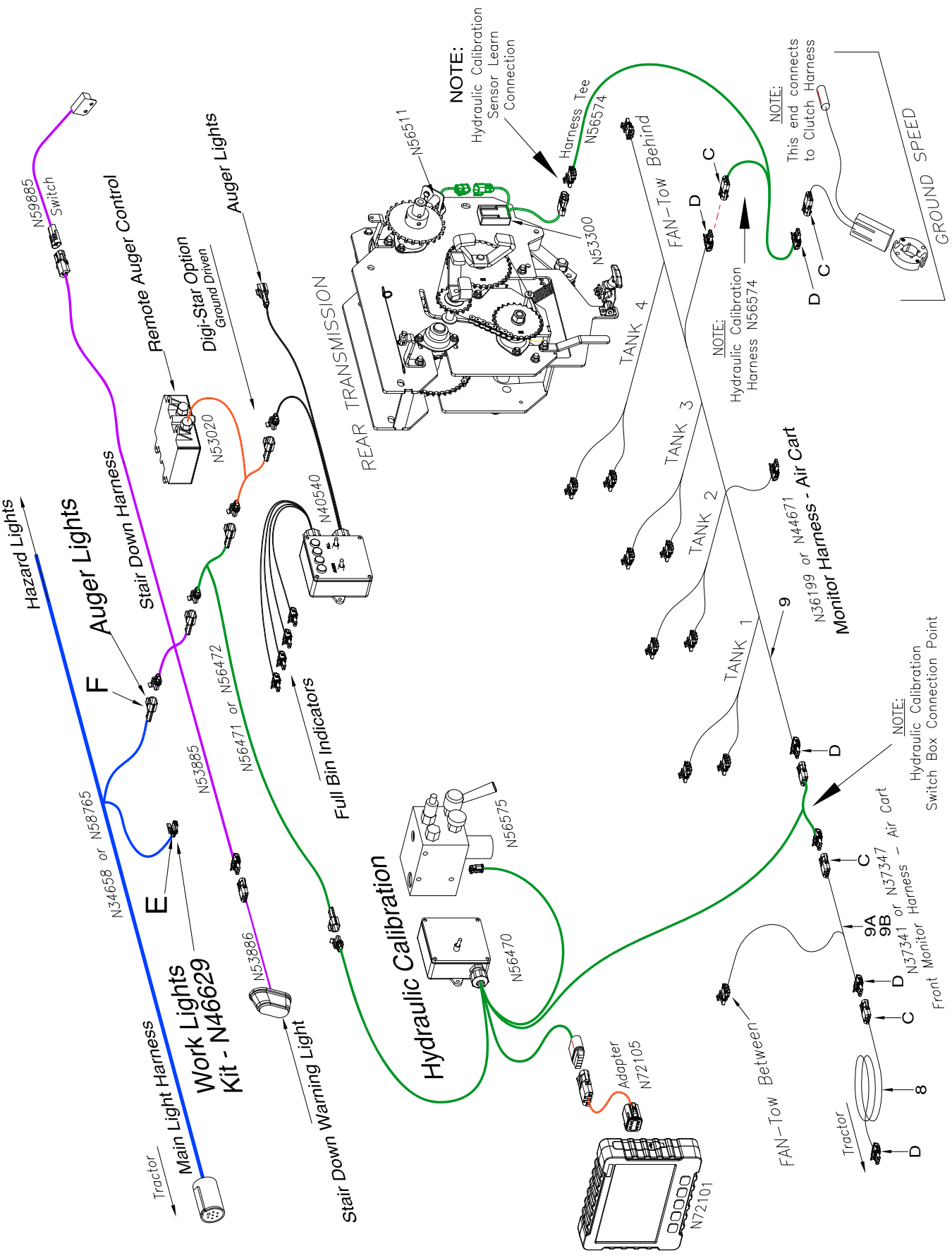
Hazard Lights
F
Auger Lights
Stair Down Harness
E
Work Lights
Kit - N46629
Main Light Harness
Tractor
N34658 or N58765
N53885
N53886
Stair Down Warning Light
N56471 or N56472
Full Bin Indicators
N40540
N53020
Remote Auger Control
Digi-Star Option
Ground Driven
Auger Lights
N59885
Switch
REAR TRANSMISSION
N56511
NOTE:
Hydraulic Calibration
Sensor Learn
Connection
Harness Tee
N56574
N53300
TANK 4
TANK 3
TANK 2
TANK 1
FAN-Tow Behind
NOTE:
Hydraulic Calibration
Harness N56574
NOTE:
This end connects
to Clutch Harness
GROUND SPEED
N36199 or N44671
Monitor Harness - Air Cart
9
Hydraulic Calibration
N56575
N56470
Adapter
N72105
N72101
NOTE:
Hydraulic Calibration
Switch Box Connection Point
9A
9B
N37341 or N37347
Front Monitor Harness - Air Cart
FAN-Tow Between
Tractor
8

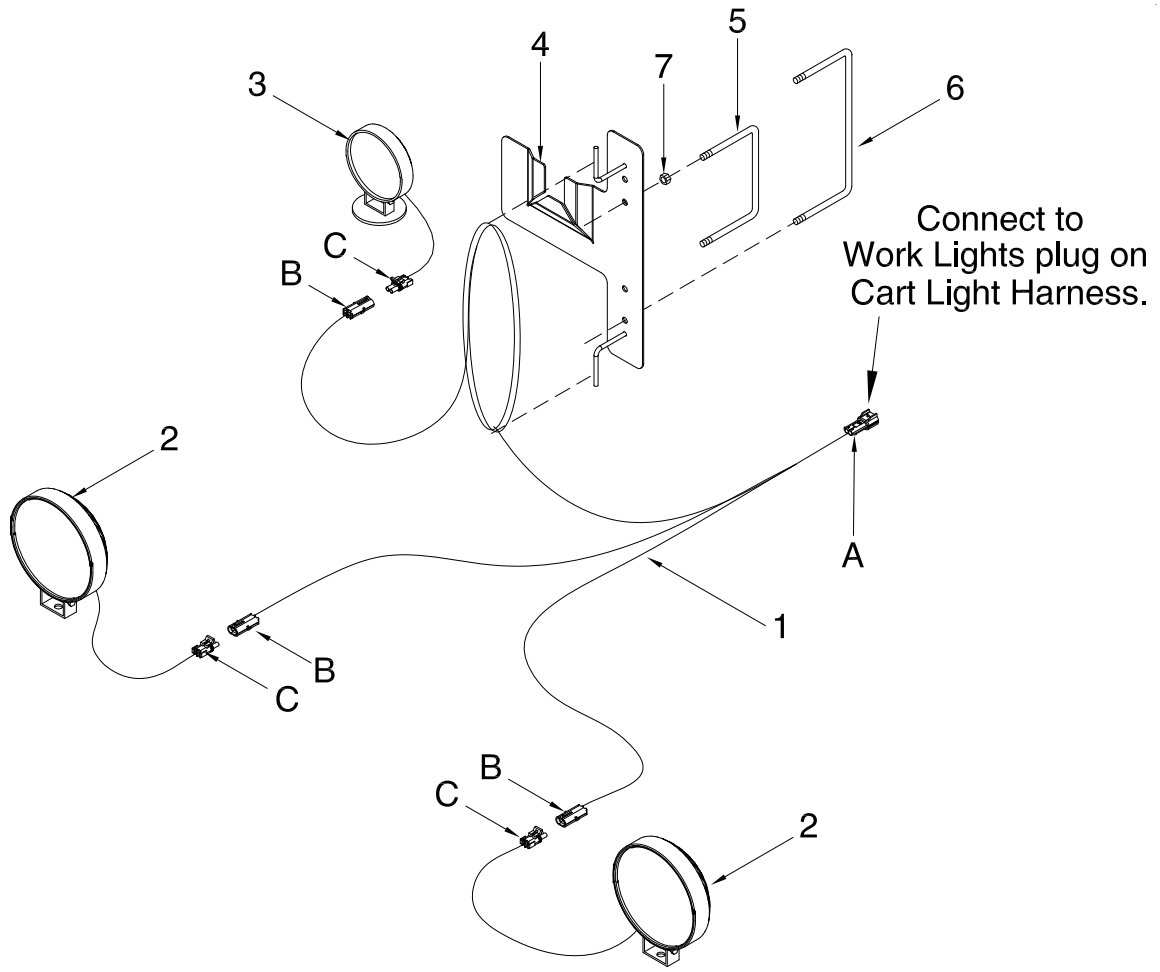

Item	Part No.	Description	Qty
1	N50363	Harness - Work Light	1
2	N50367	Work Light - 7” LED	2
3	N50364	Work Light - 4” LED Magnetic	1
4	N50370	Work Lamp Mount	1
5	H10592	U-BOLT - 3/8 x 6 x 5 UL - 9445, 9550 and 9650	1
6	N51087	U-BOLT - 3/8 x 10 x 5 1/2 UL - 9365, 9450 and 9535	1
7	M-3388	Locknut - 3/8 Unitorque	2
A	N34687	Metri - Pack - Connector - Male Terminals	
	N34688	Metri - Pack - Male Terminal - 10 Ga	
	N34691	Metri - Pack - TPA - Blue	
	N34692	Cable - Seal - Blue	
B	N29384	Weather - Pack - Shroud - 2 Male Terminals	
	N34709	Weather - Pack - Male Terminal - 16 Ga - 14 Ga	
	N29148	Cable - Seal - Green	
C	N29385	Weather - Pack - Tower - 2 Female Terminals	
	N29150	Weather - Pack - Female Terminal - 20 Ga - 18 Ga	
	N29148	Cable - Seal - Green	
		ORDER KITS THROUGH WHOLE GOODS ONLY	
	N46629	Kit - Work Lamps (Includes above items)	

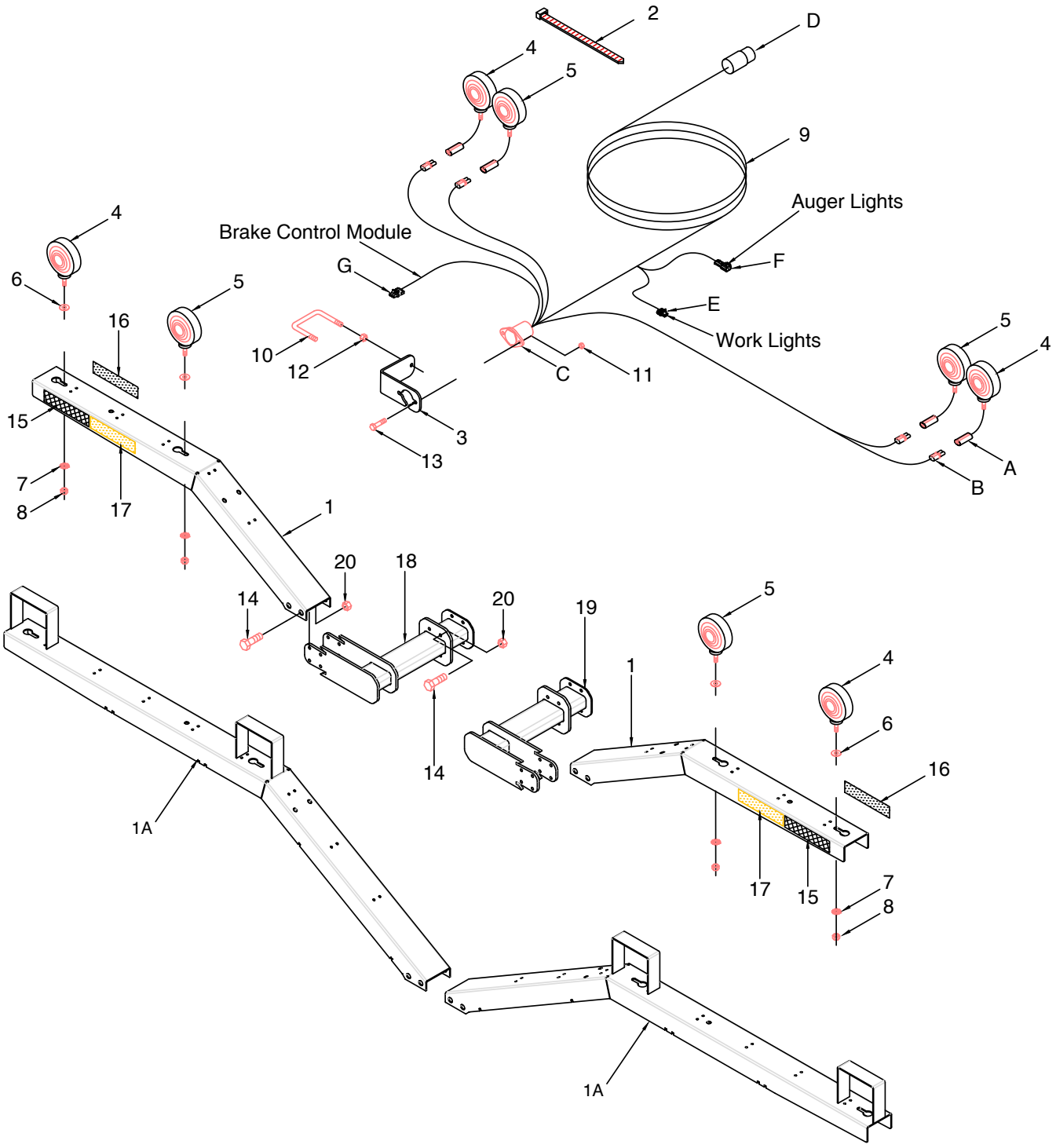
2
D
4
5
9
Auger Lights
Brake Control Module
G
F
E
Work Lights
4
6
5
16
10
12
C
11
5
4
15
3
13
A
B
7
8
17
1
20
18
14
20
19
5
1
4
6
16
1A
14
17
15
7
8
1A

Lighting - Marking Lights

Item	Part No.	Description	Qty
1	N34463	Bracket - Mounting (Single Wheels)	2
1A	N49778	Bracket - Mounting (Dual Wheels)	2
2	D-4951	Nylon Tie Strap - 7 3/8 Lg	10
3	N32001	Bracket - Mounting	1
4	**N50365**	**Light LED - Amber**	2
5	**N50366**	**Light LED - Red**	2
6	W-539	Flatwasher - 1/2	3
7	D-5280	Starwasher - 1/2	3
8	W-516	Hex Nut - 1/2	3
9	N34658	Wiring Harness - Main - 528 Lg - 9365, 9450 and 9535	1
9A	**N58765**	**Wiring Harness - Main - 588 Lg - 9445 to 91000**	**1**
10	N15098	U-Bolt - 3/8 x 4 x 5 UL	1
11	D-5278	Locknut - 5/16 Serrated	2
12	D-5279	Locknut - 3/8 Serrated	10
13	N29048	Carriage Head Bolt - 5/16 x 1 Lg	2
14	W-497	Hex Bolt - 5/8 x 1 1/2 Lg (2021 to Present)	16
	W-475	Hex Bolt - 3/8 x 1 Lg **(Prior to 2021)**	16
15	N34476	Reflector - Red	2
16	N34477	Reflector - Amber	2
17	N34478	Reflector - Orange	2
18	N53090	Extension Bracket - Left - **9800 and 91000 (Prior to 2017)**	
		For ALL 9365, 9450 and 9535 models and for Tow Between 9445, 9550 and 9650	1
	N60995	**Light Extension Bracket**	**1**
19	N53490	Extension Bracket - Right - **9800 and 91000 (Prior to 2017)**	
		For ALL 9365, 9450 and 9535 models and for Tow Between 9445, 9550 and 9650	1
	N60995	**Light Extension Bracket**	**1**
20	S-1197	Locknut - 5/8 Unitorque (2021 to Present)	16
	D-5279	Locknut - 3/8 Serrated **(Prior to 2021)**	16
A	C32681	**Deutsch - DTM04-2P - Recepticale Connector Assembly - GRAY - 2 Pin**	
B	C32682	Deutsch - DTM06-2S - Plug Connector Assembly - GRAY - 2 Pin	
C	C32686	Connector Assembly - 7 Pin Socket	
	C32684	Interior - Socket - 7 Pin Connector	
	C32685	Protective Boot - Socket - 7 Pin Connector	
D	C32690	Connector Assembly - 7 Pin Plug (Complete with Cable Protector Spring)	
	C32688	Interior - Plug - 7 Pin Connector	
	C32689	Cable Protector Spring - Plug - 7 Pin Connector	
E	N34689	Metri - Pack - Connector - Female Terminals	
	N34690	Metri - Pack - Female Terminal - 10 Ga	
	N34691	Metri - Pack - TPA - Blue	
	N34692	Cable - Seal - Blue	
F	N34687	Metri - Pack - Connector - Male Terminals	
	N34688	Metri - Pack - Male Terminal - 10 Ga	
	N34691	Metri - Pack - TPA - Blue	
	N34692	Cable - Seal - Blue	
G	N27614	Weather Pak Connector - BLACK - 3 Pin Socket	
	N27615	Seal Connector - BLACK - 3 Pin	
		ORDER KITS THROUGH WHOLE GOODS ONLY	
	N53227	Kit - Hazard Lighs (Includes items 2 to 17) - 9365, 9450 and 9535	
	N54328	Kit - Hazard Lighs (Includes items 2 to 17) - 9445 to 91000	

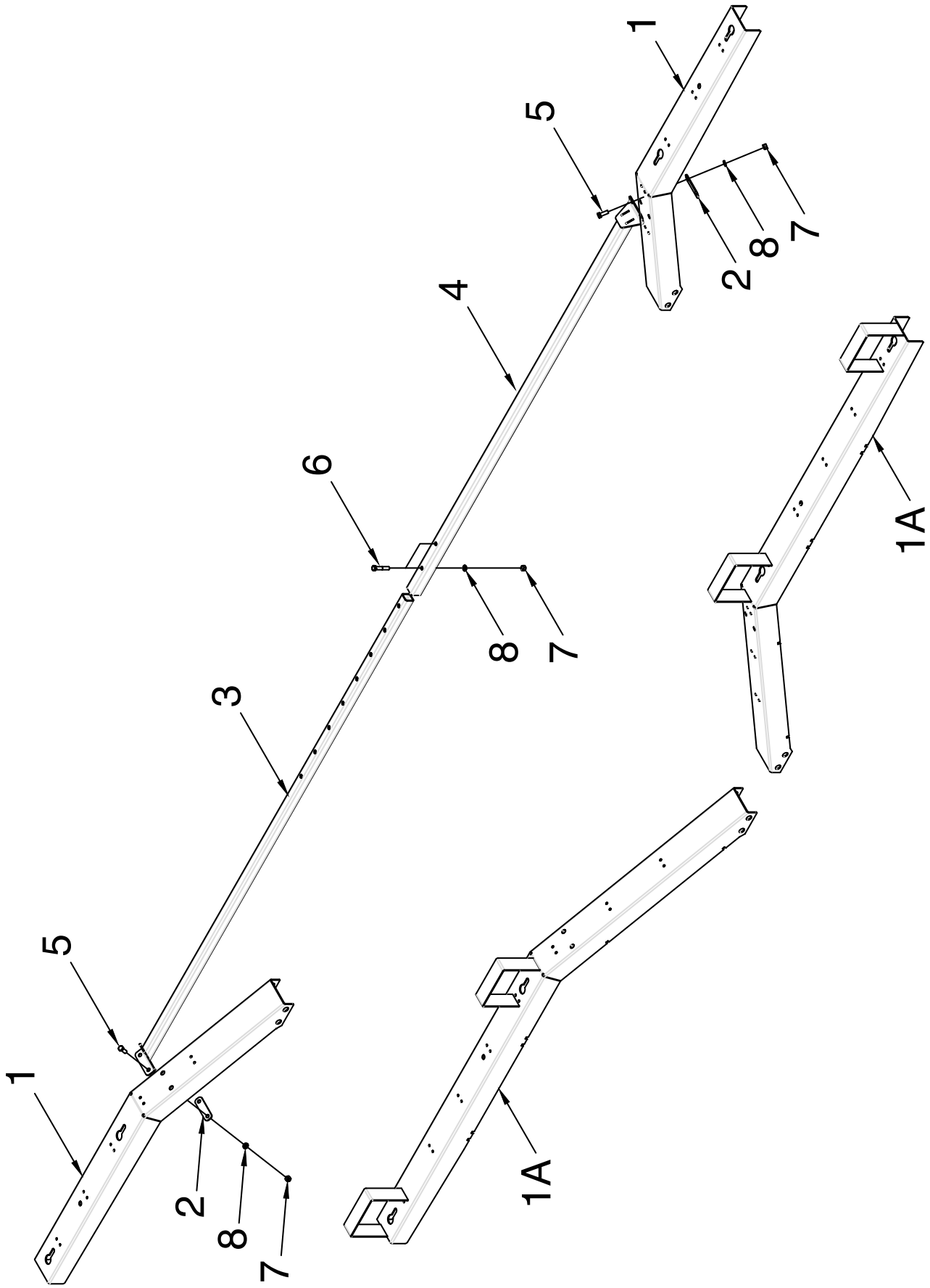
1
5
2
8
7
4
6
8
7
3
1A
5
1
2
8
7
1A

Lighting - Light Brace Kit

Item	Part No.	Description	Qty
1	N34463	Bracket - Mounting (Single Wheels)	2
1A	N49778	Bracket - Mounting (Dual Wheels)	2
2	N69731	Light Brace - Backing Plate	2
3	N69728	Light Brace - Inner Sleeve	1
4	N70529	Light Brace - Outer Sleeve	1
5	W-475	Hex Bolt - 3/8 x 1 Lg	4
6	W-478	Hex Bolt - 3/8 x 2 Lg	2
7	W-514	Nut - 3/8	6
8	W-523	Lockwasher - 3/8	6
		ORDER KITS THROUGH WHOLE GOODS ONLY	
	N69730	Kit - Light Brace (Includes items 2 to 8)	

Lighting
Auger Lights and Full Tank Indicator - Prior to 2016

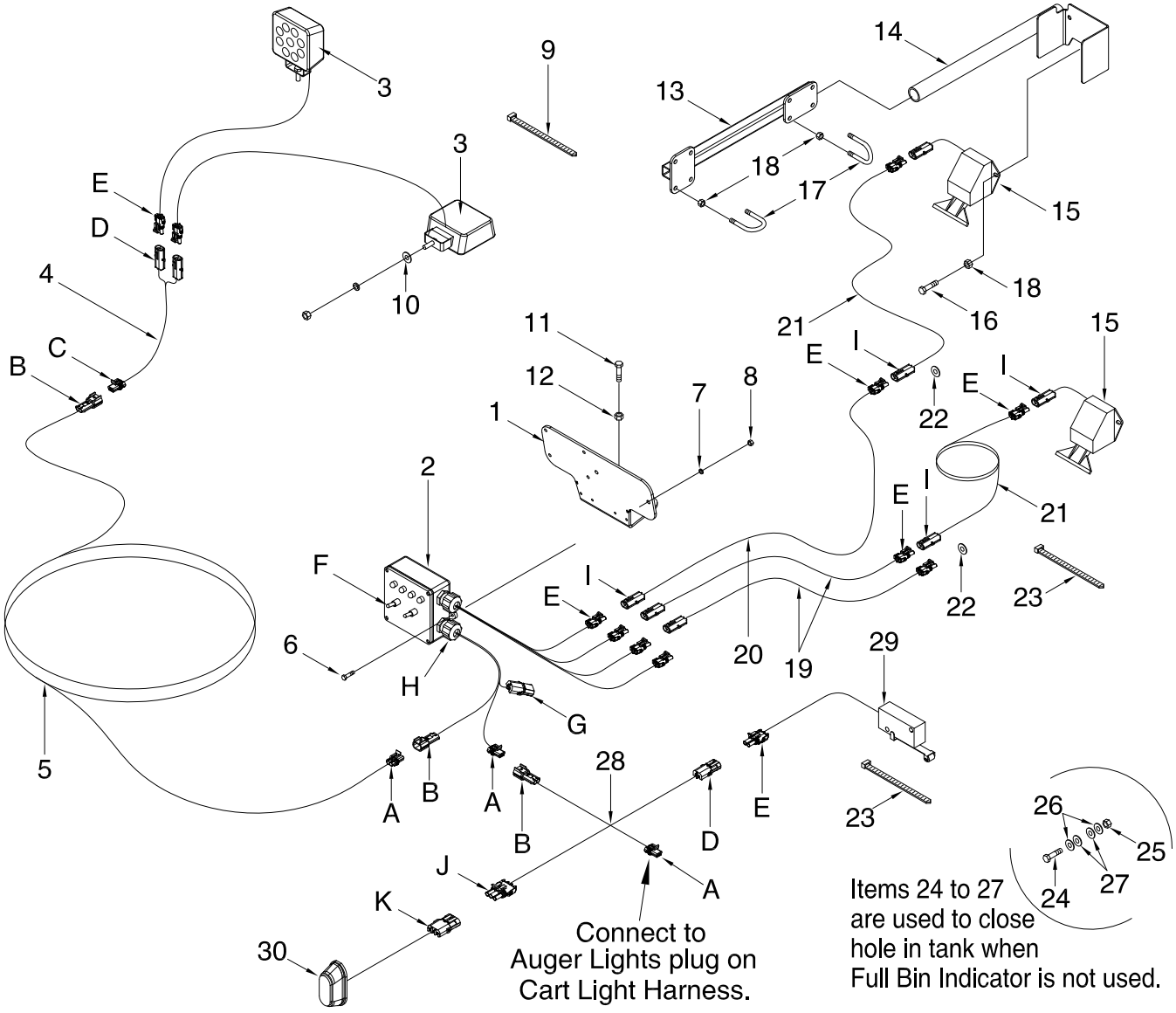

Lighting - Auger Lights and Full Tank Indicator - Prior to 2016

Item	Part No.	Description	Qty
1	**N55833**	**Mount Plate - 9365 - 9650**	**1**
	N62080	Mount Plate - 9800 - 91000	1
2	N40540	Switch Box - (Red LED Light - N69040)	1
3	N53228	Work Light LED	2
4	N34682	Cable - Two Light Adapter	1
5	N34681	Cable - Auger Light	1
6	W-1552	Hex Bolt - 1/4 x 1	2
7	W-521	Lockwasher - 1/4	2
8	W-512	Hex Nut - 1/4	2
9	D-4951	Tie Strap - 7 1/2 Lg	30
9A	D-4838	Tie Strap - 14 1/2 Lg	5
10	N53231	Backing Washer - 11/32 ID x 1 1/8 OD x .1345 Thick	2
11	W-475	Hex Bolt - 3/8 x 1 lg	2
12	D-5279	Lock Nut - 3/8 Serrated Flange	2
		Following Item Quantities are listed per Tank	
13	N42143	Bracket - Ladder Mount	1
14	N42145	Switch Bracket	1
15	N42090	Level Sensor	1
16	N15112	Hex Bolt - 5/16 x 3/4	2
17	N42091	U-Bolt - 5/16 x 2 1/4	4
18	N42098	Locknut - 5/16 stainless	10
19	N37014	Cable - 5 ft (Used in Tank 2 and Tank 3)	1
20	N37016	Cable - 10 ft (Used in Tank 1 and Tank 4)	1
21	N42089	Cable - 11 ft (Used in each Tank)	1
22	* * * * *	Grommet includes - N56748, N56749, N56750	1
23	N34715	Tie Strap - 5.6 Lg	10
24	N36597	Hex Bolt -1/4 X 3/4 HEX UNC SS304	1
25	N36143	Nut - Nylon - 1/4 Flange	1
26	S-4747	Washer - 0.281 ID x 1.75OD x 14GA	2
27	N42198	Seal - Full Bin Hole Washer	2
		Following Items Stair Down Warning Light	
28	N53885	Harness - Stair Down Warning Light	1
29	N53884	SPDT Switch	1
30	N53886	Strobe Light	1
A	N34689	Metri - Pack - Connector - Female Terminals	
	N34690	Metri - Pack - Female Terminal - 10 Ga	
	N34691	Metri - Pack - TPA - Blue	
	N34692	Cable - Seal - Blue	
B	N34687	Metri - Pack - Connector - Male Terminals	
	N34688	Metri - Pack - Male Terminal - 10 Ga	
	N34691	Metri - Pack - TPA - Blue	
	N34692	Cable - Seal - Blue	
C	N34689	Metri - Pack - Connector - Female Terminals	
	N34700	Metri - Pack - Female Terminal - 14 Ga -12 Ga	
	N34691	Metri - Pack - TPA - Blue	
	N29148	Cable - Seal - Green	
D	N29384	Weather - Pack - Shroud - 2 Male Terminals	
	N34709	Weather - Pack - Male Terminal - 16 Ga - 14 Ga	
	N29148	Cable - Seal - Green	
E	N29385	Weather - Pack - Tower - 2 Female Terminals	
	N29150	Weather - Pack - Female Terminal - 20 Ga - 18 Ga	
	N29148	Cable - Seal - Green	
F	N34696	Switch - Toggle	
G	N34698	Fuse - 10 Amp	
H	N34703	Switch Boot	
I	N29384	Weather - Pack - Shroud - 2 Male Terminals	
	N29149	Weather - Pack - Male Terminal - 20 Ga - 18 Ga	
	N29148	Cable - Seal - Green	
J	N27614	Weather Pak Connector - Tower - 3 Female Terminals	
K	N27613	Weather Pak Connector - Shroud - 3 Male Terminals	
		ORDER KITS THROUGH WHOLE GOODS ONLY	
	N46948	Kit - Auger Work Light (Includes items 3 - 10)	
	N41594	Kit - Full Bin Indicator - 2 Tank Cart (Includes Item 2 and 10 - 20)	
	N41596	Kit - Full Bin Indicator - 3 Tank Cart (Includes Item 2 and 10 - 20)	
	N52037	Kit - Full Bin Indicator - 4 Tank Cart (Includes Item 2 and 10 - 20)	

Lighting
Auger Lights and Full Tank Indicator - 2016 to Present

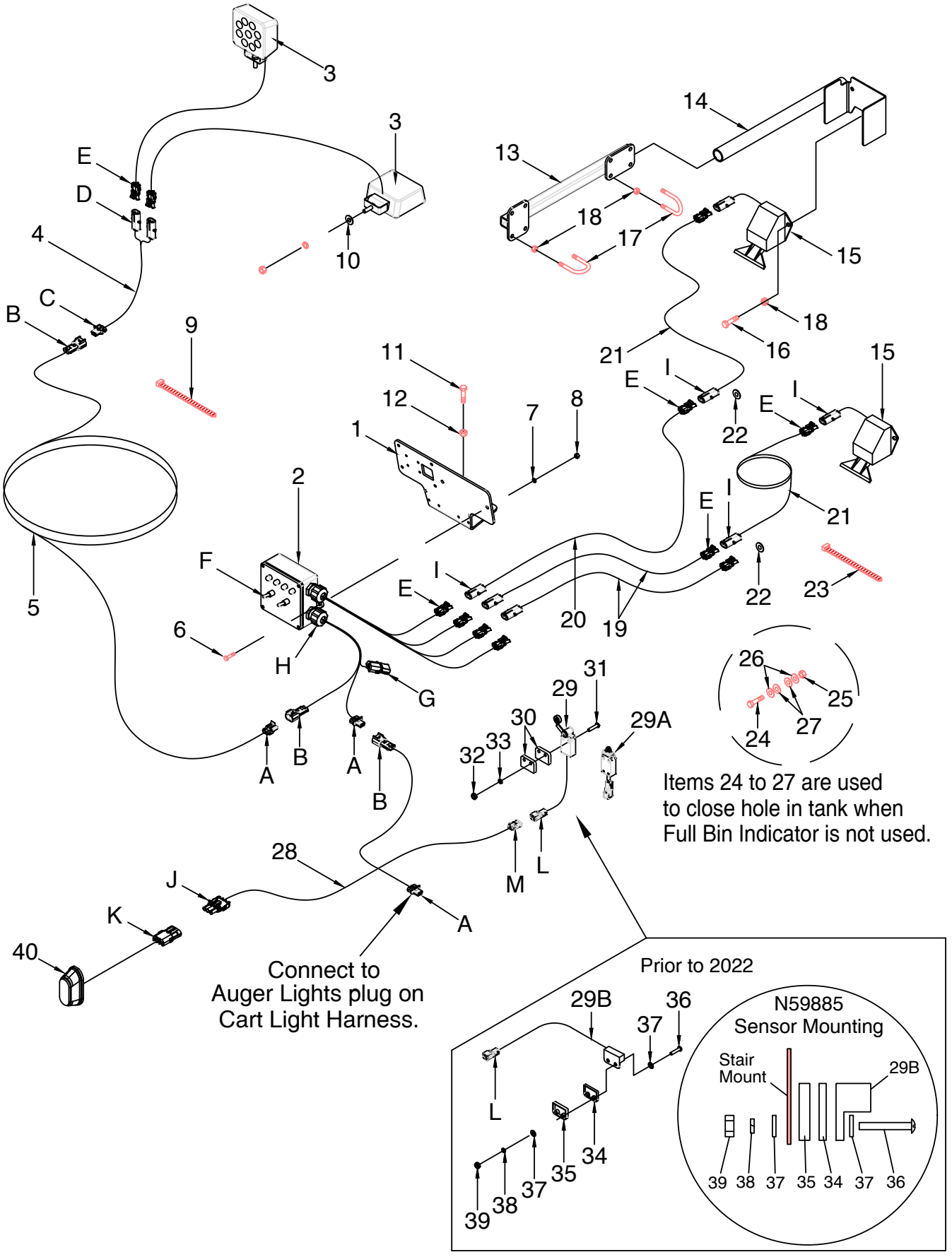

Lighting - Auger Lights and Full Tank Indicator - 2016 to Present

Item	Part No.	Description	Qty
1	**N55833**	**Mount Plate - 9365 - 9650**	**1**
	N62080	Mount Plate - 9800 - 91000	1
2	N40540	Switch Box - (Red LED Light - N69040)	1
3	N53228	Work Light - LED	2
4	N34682	Cable - Two Light Adapter	1
5	N34681	Cable - Auger Light	1
6	W-1552	Hex Bolt - 1/4 x 1 Lg	2
7	W-521	Lockwasher - 1/4	2
8	W-512	Hex Nut - 1/4	2
9	D-4951	Tie Strap - 7 1/2 Lg	30
9A	D-4838	Tie Strap - 14 1/2 Lg	5
10	N53231	Backing Washer - 11/32 ID x 1 1/8 OD x .1345 Thick	2
11	W-475	Hex Bolt - 3/8 x 1 Lg	2
12	D-5279	Lock Nut - 3/8 Serrated Flange	2
		Following Item Quantities are listed per Tank	
13	N42143	Bracket - Ladder Mount	1
14	N42145	Switch Bracket	1
15	N42090	Level Sensor	1
16	N15112	Hex Bolt - 5/16 x 3/4 Lg	2
17	N42091	U-Bolt - 5/16 x 1 3/8 x 2 1/4 Lg	4
18	N42098	Locknut - 5/16 stainless	10
19	N37014	Cable - 5 ft (Used in Tank 2 and Tank 3)	1
20	N37016	Cable - 10 ft (Used in Tank 1 and Tank 4)	1
21	N42089	Cable - 11 ft (Used in each Tank)	1
22	* * * * *	Grommet includes - N56748, N56749, N56750	1
23	N34715	Tie Strap - 5.6 Lg	10
24	N36597	Hex Bolt -1/4 x 3/4 Lg - stainless	1
25	N36143	Nut - Nylon - 1/4 Flange	1
26	S-4747	Washer - 0.281 ID x 1.75OD x 14GA	2
27	N42198	Seal - Full Bin Hole Washer	2
		Following Items Stair Down Warning Light	
28	N59884	Harness - Stair Down Warning Light	1
29	**N69737**	**Position Sensor - 2024 to present**	**1**
29A	**N71829**	**Position Sensor - 2022 to 2024**	**1**
29B	N59885	Sensor - Ferrous Proximity - Prior to 2022	
		Note: Item 29B can be converted to Item 29 with hardware 31, 32 and 33)	
30	N71512	Spacer - 1/4 Thick	2
31	N71831	Machine Screw - #8 x 1 1/2 Lg	2
32	N71832	Locknut - #8	2
33	N71836	Flat Washer - #8	2
34	N62091	Plastic Spacer - 0.2 Thick	1
35	N62092	Plastic Spacer - 0.3 Thick	1
36	N59974	Machine Scriew - #12-24 x 1 1/2 Lg Brass	2
37	11573	Flat Washer #12 - 0.25 ID x 0.562 OD - Brass	4
38	11572	Lockwasher #12 - 0.216 ID - Brass	2
39	11570	Hex Nut #12 - Brass	2
40	N53886	Strobe Light	1
		ORDER KITS THROUGH WHOLE GOODS ONLY	
	N46948	Kit - Auger Work Light (Includes items 3 - 10)	
	N41594	Kit - Full Bin Indicator - 2 Tank Cart (Includes Item 2 and 10 - 20)	
	N41596	Kit - Full Bin Indicator - 3 Tank Cart (Includes Item 2 and 10 - 20)	
	N52037	Kit - Full Bin Indicator - 4 Tank Cart (Includes Item 2 and 10 - 20)	

Lighting - Auger Lights and Full Tank Indicator - 2016 to Present

Item	Part No.	Description	Qty
A	**N34689**	**Metri - Pack - Connector - Female Terminals**	
	N34690	Metri - Pack - Female Terminal - 10 Ga	
	N34691	Metri - Pack - TPA - Blue	
	N34692	Cable - Seal - Blue	
B	**N34687**	**Metri - Pack - Connector - Male Terminals**	
	N34688	Metri - Pack - Male Terminal - 10 Ga	
	N34691	Metri - Pack - TPA - Blue	
	N34692	Cable - Seal - Blue	
C	**N34689**	**Metri - Pack - Connector - Female Terminals**	
	N34700	Metri - Pack - Female Terminal - 14 Ga -12 Ga	
	N34691	Metri - Pack - TPA - Blue	
	N29148	Cable - Seal - Green	
D	**N29384**	**Weather - Pack - Shroud - 2 Male Terminals**	
	N34709	Weather - Pack - Male Terminal - 16 Ga - 14 Ga	
	N29148	Cable - Seal - Green	
E	**N29385**	**Weather - Pack - Tower - 2 Female Terminals**	
	N29150	Weather - Pack - Female Terminal - 20 Ga - 18 Ga	
	N29148	Cable - Seal - Green	
F	**N34696**	**Switch - Toggle**	
G	N34698	Fuse - 10 Amp	
H	N34703	Switch Boot	
I	**N29384**	**Weather - Pack - Shroud - 2 Male Terminals**	
	N29149	Weather - Pack - Male Terminal - 20 Ga - 18 Ga	
	N29148	Cable - Seal - Green	
J	**N27614**	**Weather Pak Connector - Tower - 3 Female Terminals**	
K	N27613	Weather Pak Connector - Shroud - 3 Male Terminals	
L	C32681	**Deutsch - DTM04-2P - Recepticale Connector Assembly - GRAY - 2 Pin**	
M	C32682	Deutsch - DTM06-2S - Plug Connector Assembly - GRAY - 2 Pin	

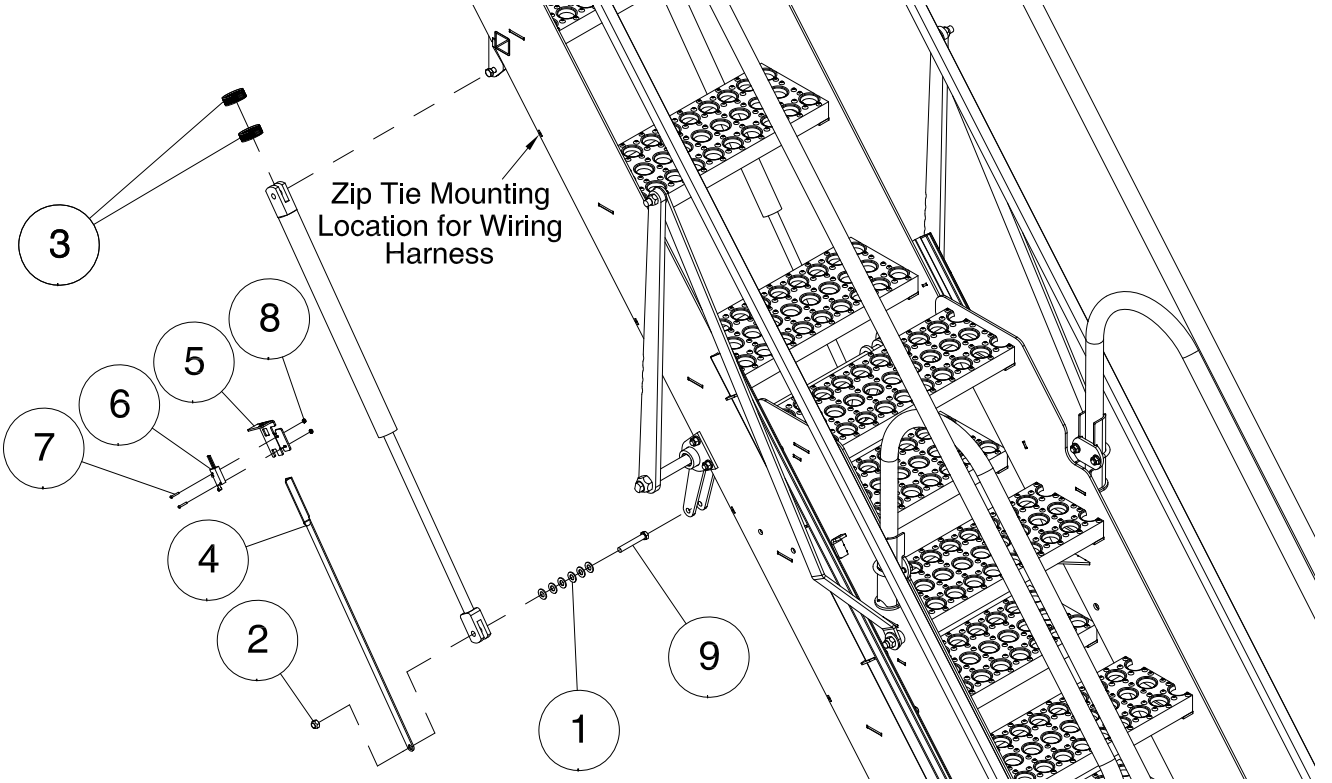

Assemble switch when the stairs are in the UP position. Also be sure that the switch is depressed by Activator Plate when the stairs are in the UP position.

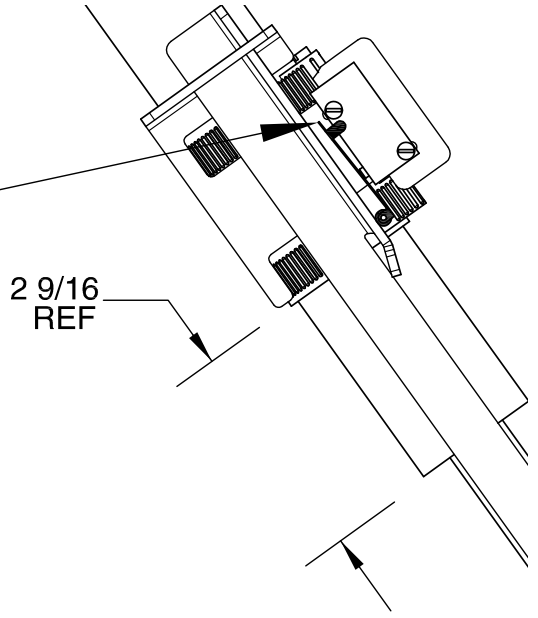

Item	Part No.	Description	Qty
1	D-5489	Washer - 13/32 ID x 13/16 OD x 16 Ga.	5
2	M-3388	Lociknut - 3/8 Unitorque	4
3	N11470	Hose Clamp - HC5-20	2
4	N53882	Bracket - Switch Activator	1
5	N53883	Bracket - Switch Mount	1
6	N53884	SPDT Switch	1
7	N53887	Machine Screw - #4-40 Slotted Screw	2
8	N53888	Hex Nut w/ Tooth Washer - #4-40 Machine Screw	2
9	W-480	Hex Bolt - 3/8 x 2 1/2 Lg.	1

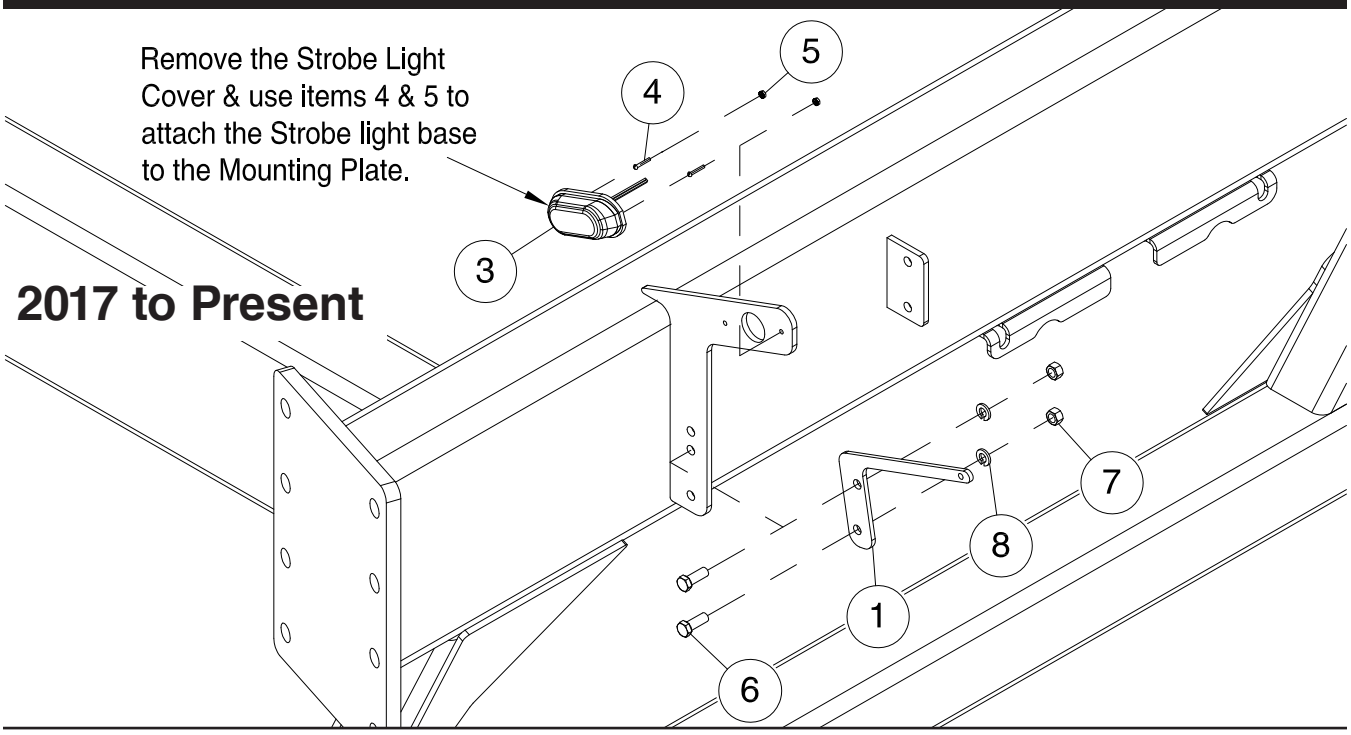

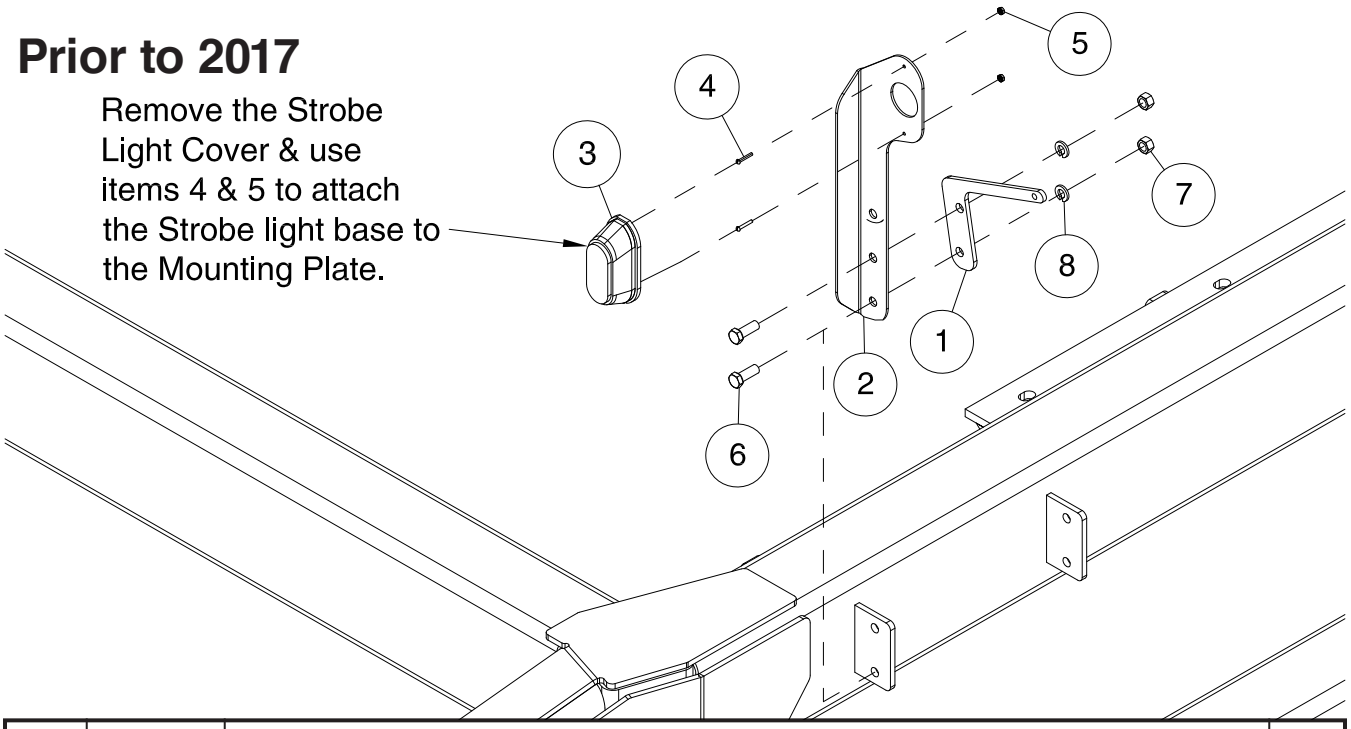

Item	Part No.	Description	Qty
1	N50654	Sprocket Mount - Ground Drive only	1
2	N53881	Bracket - Warning Light (Prior to 2017)	1
3	N53886	Strobe Light	1
4	N53887	Machine Screw - #4-40 Slotted Screw	2
5	N53888	Hex Nut w/ Tooth Washer - #4-40 Machine Screw	2
6	W-475	Hex Bolt - 3/8 x 1 Lg	2
7	W-514	Hex Nut - 3/8	2
8	W-523	Lockwasher - 3/8	2

Safety Signs
SMV Sign

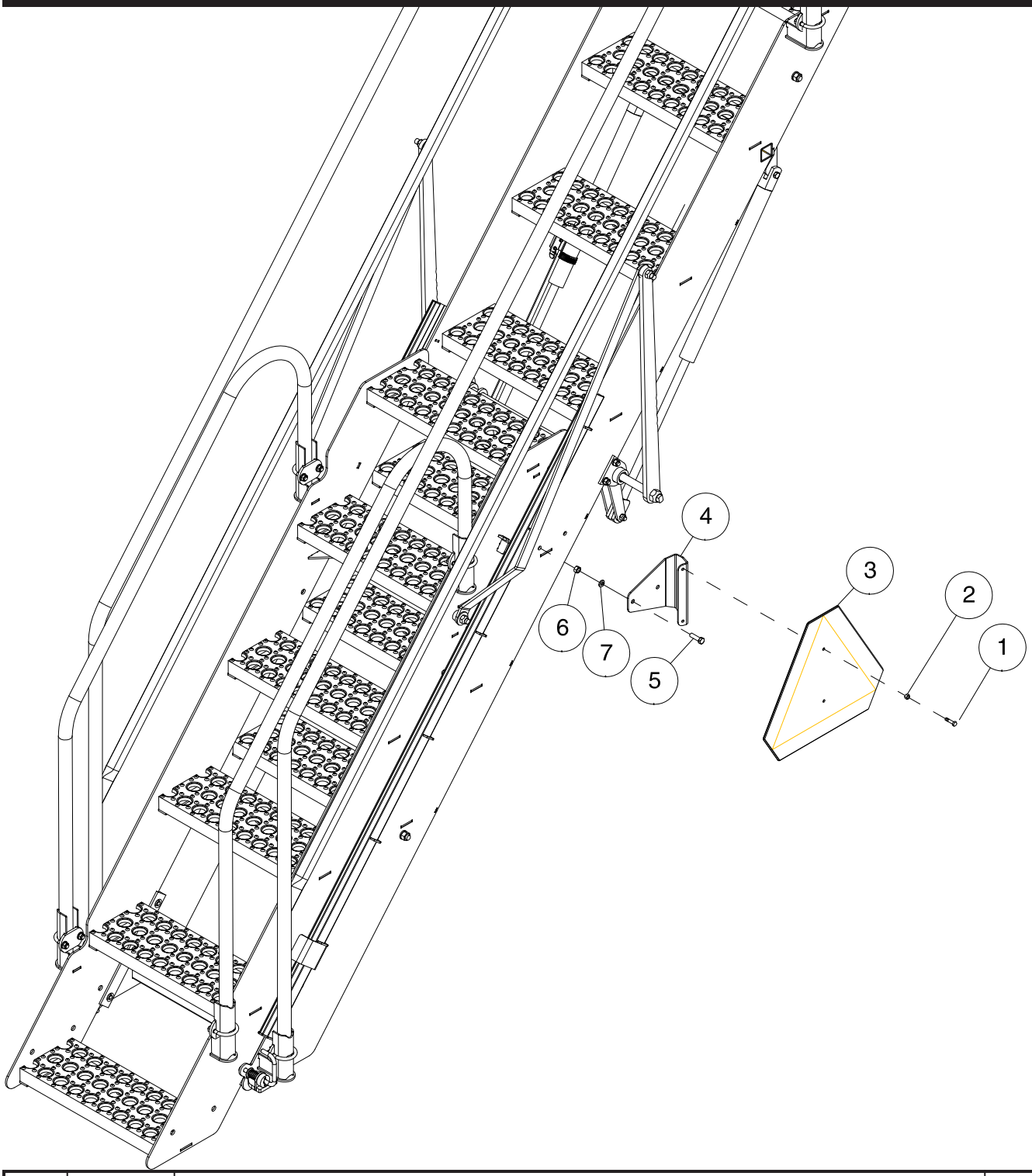

Item	Part No.	Description	Qty
1	K-3830	Hex Bolt - 1/4 x 1/2 Lg.	2
2	N22778	Locknut - 1/4 Nylon Insert	2
3	N34475	Slow Moving Vehicle Emblem	1
4	N55196	SMV Universal Bracket	1
5	W-187	Hex Bolt - 3/8 x 1 1/4 Lg.	2
6	W-514	Hex Nut - 3/8	2
7	W-523	Lockwasher - 3/8	2

Decals

Part #	Description	QTY
Tanks		
N53153	Decal - “MORRIS” (9” height)	2
N53154	Decal - Morris Bullet (12” Diameter)	1
N53155	Decal - Morris Bullet (47” Diameter)	1
N53156	Decal - ARROW	2
N53157	Decal - “9365” (2 tank Small Frame)	2
N53159	Decal - “9450” (3 tank Small Frame)	2
N53160	Decal - “9535” (4 tank Small Frame)	2
N53158	Decal - “9445” (2 tank Large Frame)	2
N53180	Decal - “9550” (3 tank Large Frame)	2
N53181	Decal - “9650” (4 tank Large Frame)	2
N55820	Decal - “9555” (2 tank)	2
N53182	Decal - “9680” (3 tank)	2
N53183	Decal - “9800” (4 tank)	2
N53195	Decal - “91000” (4 tank)	2
N53185	Decal - Tank Size - 86 Bu	1
N53186	Decal - Tank Size - 107 Bu	1
N53187	Decal - Tank Size - 133 Bu	1
N53188	Decal - Tank Size - 162 Bu	1
N53189	Decal - Tank Size - 182 Bu	1
N53190	Decal - Tank Size - 221 Bu	1
N53191	Decal - Tank Size - 265 Bu	1
N53192	Decal - Tank Size - 284 Bu	1
N53193	Decal - Tank Size - 331 Bu	1
N53194	Decal - Tank Size - 349 Bu	1
N29729	Decal - Important - Tank Bolts	6
N50158	Decal - Important - Quad Hitch Bolt Torque	1
N50177	Decal - Arm 1	2
N50178	Decal - Arm 2	2
N45429	Decal - Patent	1
N55496	Decal - Patent	1

Rate Charts - Imperial

N36021 - Slow Speed
N36022 - Seed
N36023 - Fertilizer

Rate Charts - Metric

N37146 - Slow Speed
N37147 - Seed
N37148 - Fertilizer

ICT		
N56167	Decal - Seed Plate Settings	1
N56210	Decal - ICT	2
N58899	Decal - Patent	1
N60417	Decal - Harness Plug ID	2
N60418	Decal - Harness Plug ID	4

Decals - Continued

Part #	Description	QTY
Frame		
C31201	Decal - Warning	1
D13705	Decal - Warning - “No Riders”	2
N19023	Decal - Danger	1
N24301	Decal - Warning	1
N55695	Decal - Important - “Wheel Nut Torque”	1
N36261	Decal - Warning - “Over Head Hazard”	1
N36264	Decal - Important - “Cycle Collector Valve Daily”	1per metering Body
N36263	Decal - Warning - “Burn Hazard”	1
N36255	Decal - Warning - “Crushing Hazard”	1
N36259	Decal - “Open/Close”	2 per metering Body
N36262	Decal - Danger - “Confined Space Hazard”	1 per Lid
N15094	Decal - Caution - “To Avoid Injury”	1 per Lid
N42356	Decal - Important - “Before Filling Tank”	1 per Lid
N21604	Decal - Important - “Prevent Corrosion”	1
N45429	Decal - Patented	1
N55496	Decal - Patented	1
N29355	Decal - Warning - “Moving Part Hazard” (VRT ONLY)	1
N32799	Decal - Danger - “Guard Missing” (VRT ONLY)	3
N45427	Decal - “Seed Plate Usage” (VRT ONLY)	1
N36254	Decal - “Calibrate/Fan” (VRT ONLY)	1
N49783	Decal - “Calibrate/Fan” (VRT ONLY)	1
N19029	Decal - “Rotation” (VRT Drive)	3
N19029	Decal - “Rotation” (Standard Drive)	1
N19028	Decal - “Hair Pin Location” (Large Frame)	2
N27864	Decal - “Hair Pin Location” (Small Frame)	2
N27864	Decal - “Hair Pin Location” (Large Frame Tow Between)	1 rear transmission
N44287	Decal - “Hair Pin Location” (Large Frame Tow Behind)	1 rear transmission
N60303	Decal - “Hair Pin Location” (ICT Carts)	1 per transmission
N36256	Decal - “Quick Change Sprocket”	1 per transmission
N36257	Decal - “Meter Shaft Sprocket”	1 per transmission
N42291	Decal - “Auger Position”	1
N36453	Decal - “Fan/Auger”	1
N50875	Decal - Conveyor - Lock/Unlock - Raise/Lower	1
N36443	Decal - “Lever Position”	1
N36258	Decal - Caution - “Secure Auger”	1
N19033	Decal - Danger - “Electrocution Hazard”	1
N19034	Decal - Danger - “Rotating Flighting Hazard”	1
C25809	Decal - “Grease 50 Hours”	2 per transmission
C25810	Decal - “Grease 100 Hours”	2
N37492	Decal - “Open/Closed” - Plenum	2
N34476	Reflector - Red	4
N34477	Reflector - Yellow	8
N34478	Reflector - Orange	4
N34475	SMV Sign	1

The following pages provide basic Decal Location information, for more details contact Morris’ Customer Service.

Front

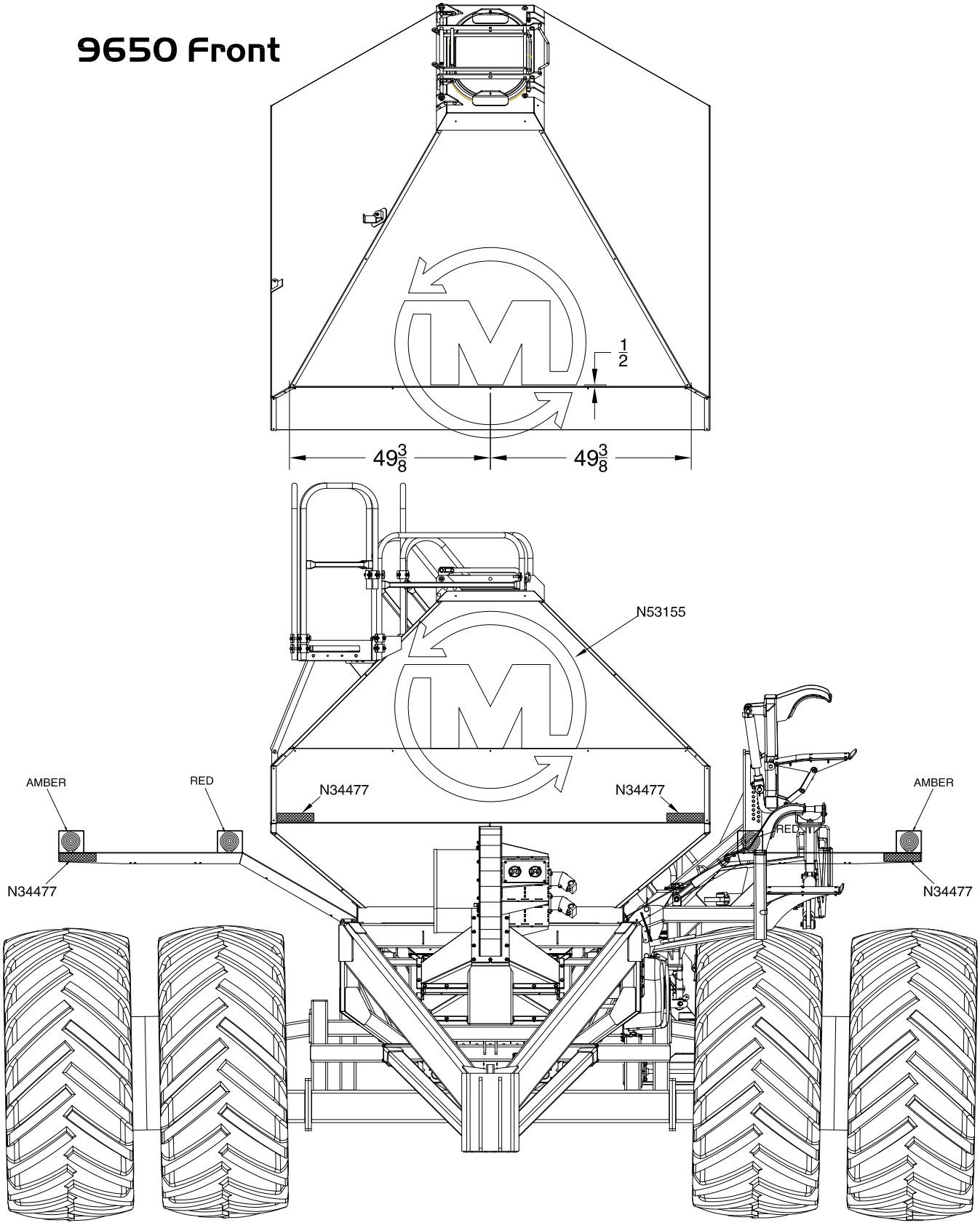
9650 Front
1/2
49 3/8
49 3/8
N53155
AMBER
RED
N34477
N34477
AMBER
RED
N34477
N34477

Rear

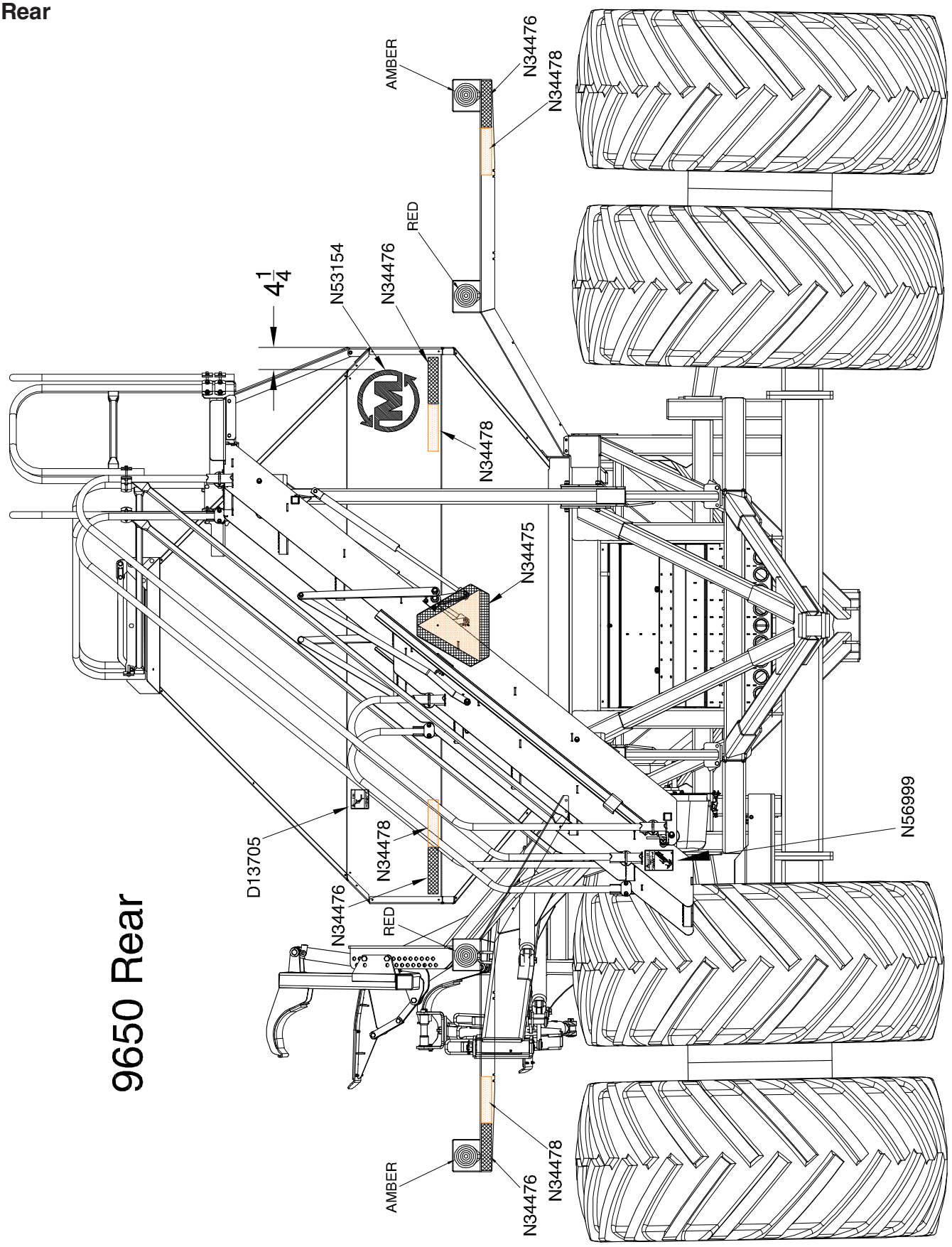
9650 Rear
AMBER
N34476
N34478
RED
N53154
N34476
4 1/4
N34478
N34475
D13705
N34478
N34476
RED
N56999
AMBER
N34476
N34478

Left Side - Tow Between

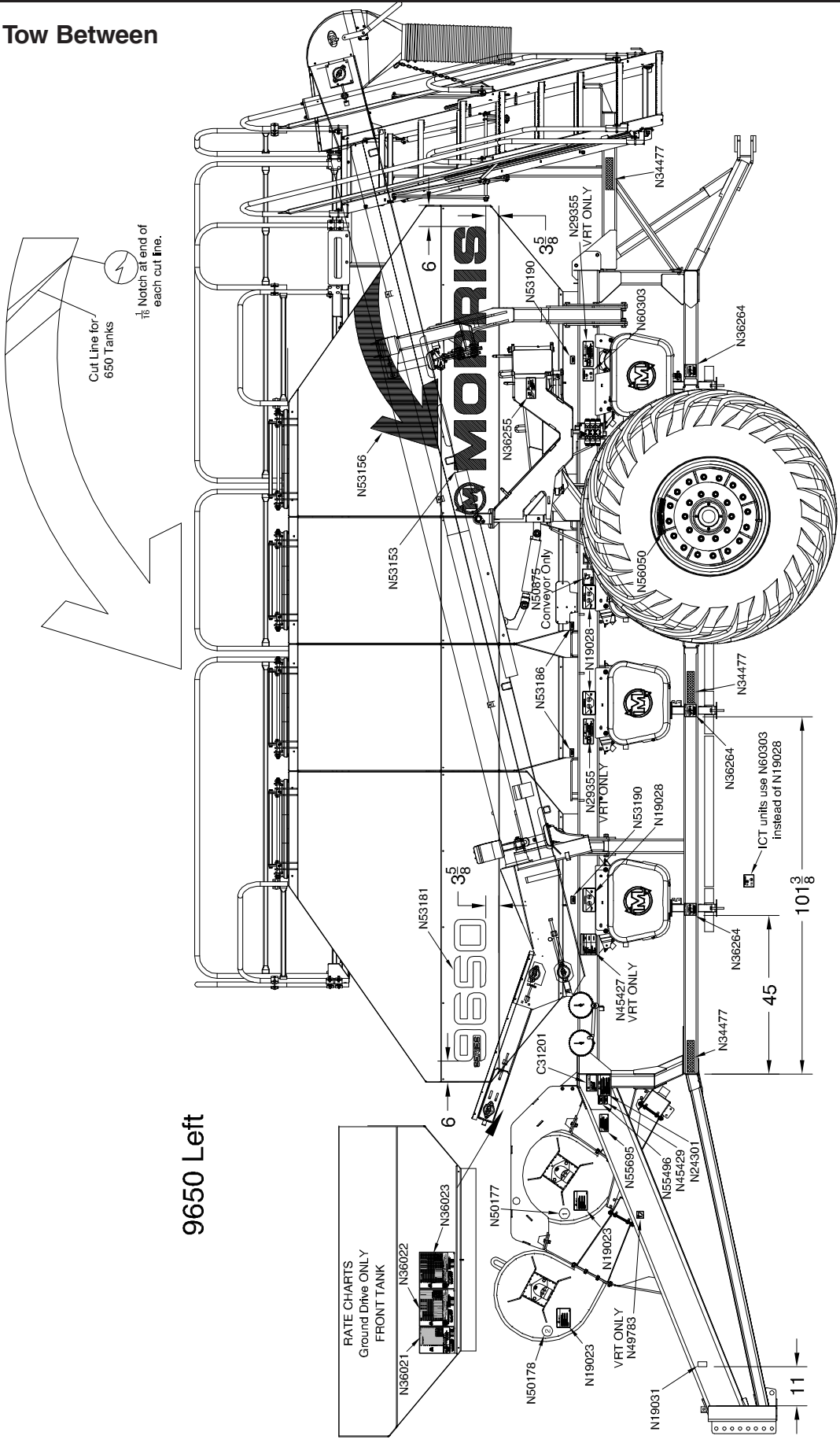

9650 Left

Right Side - Tow Between

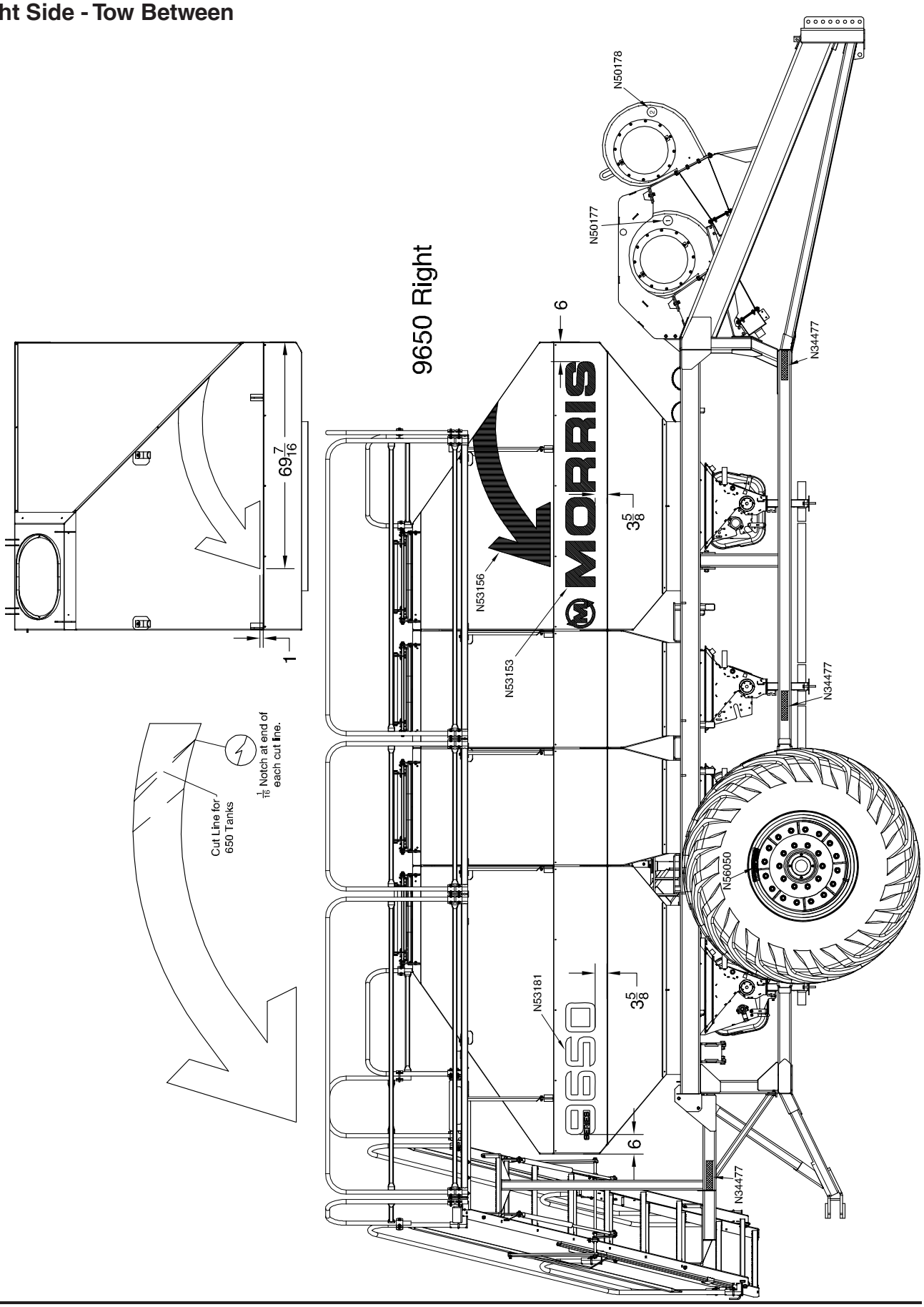

Left Side - Tow Behind

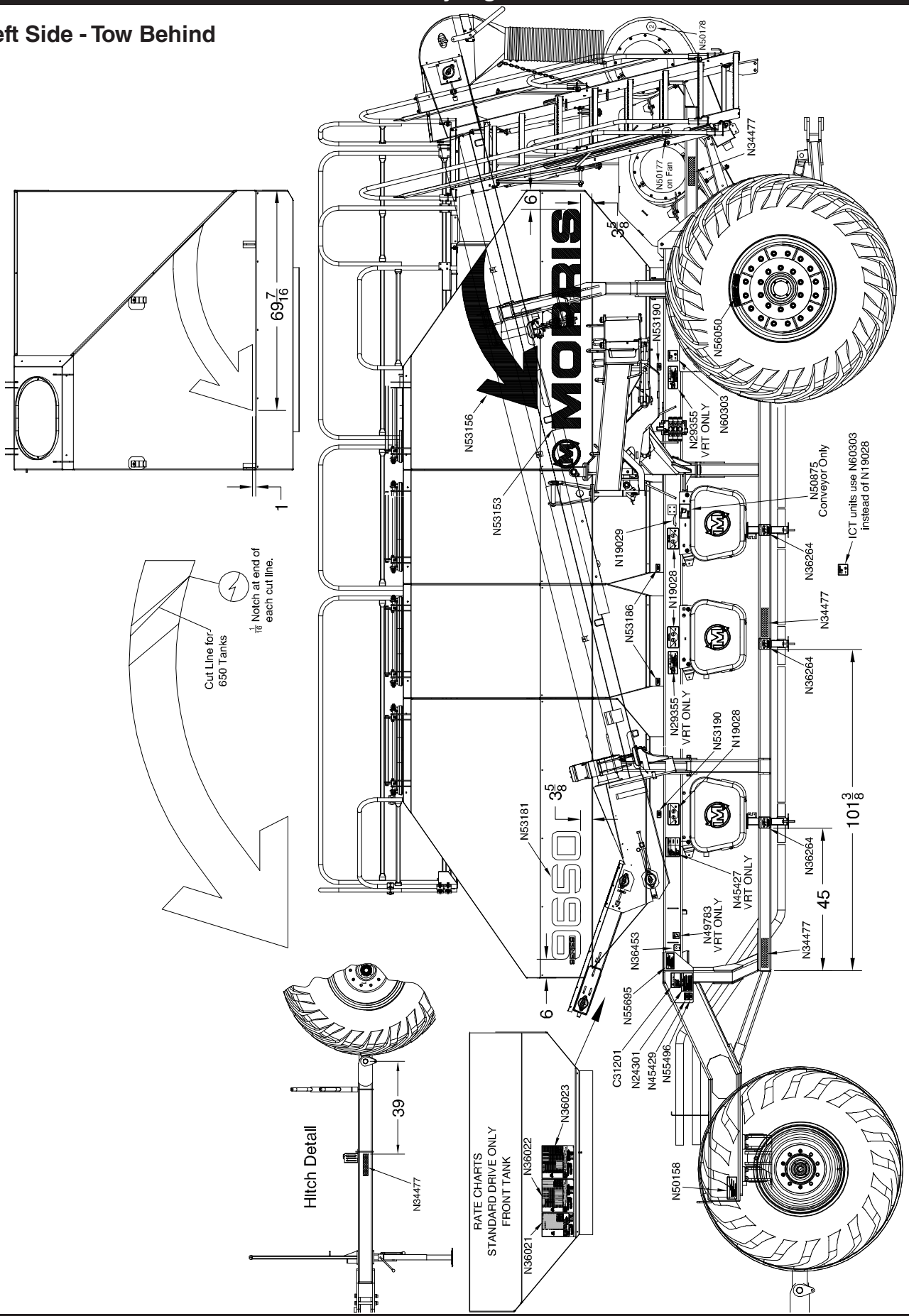

Right Side - Tow Behind

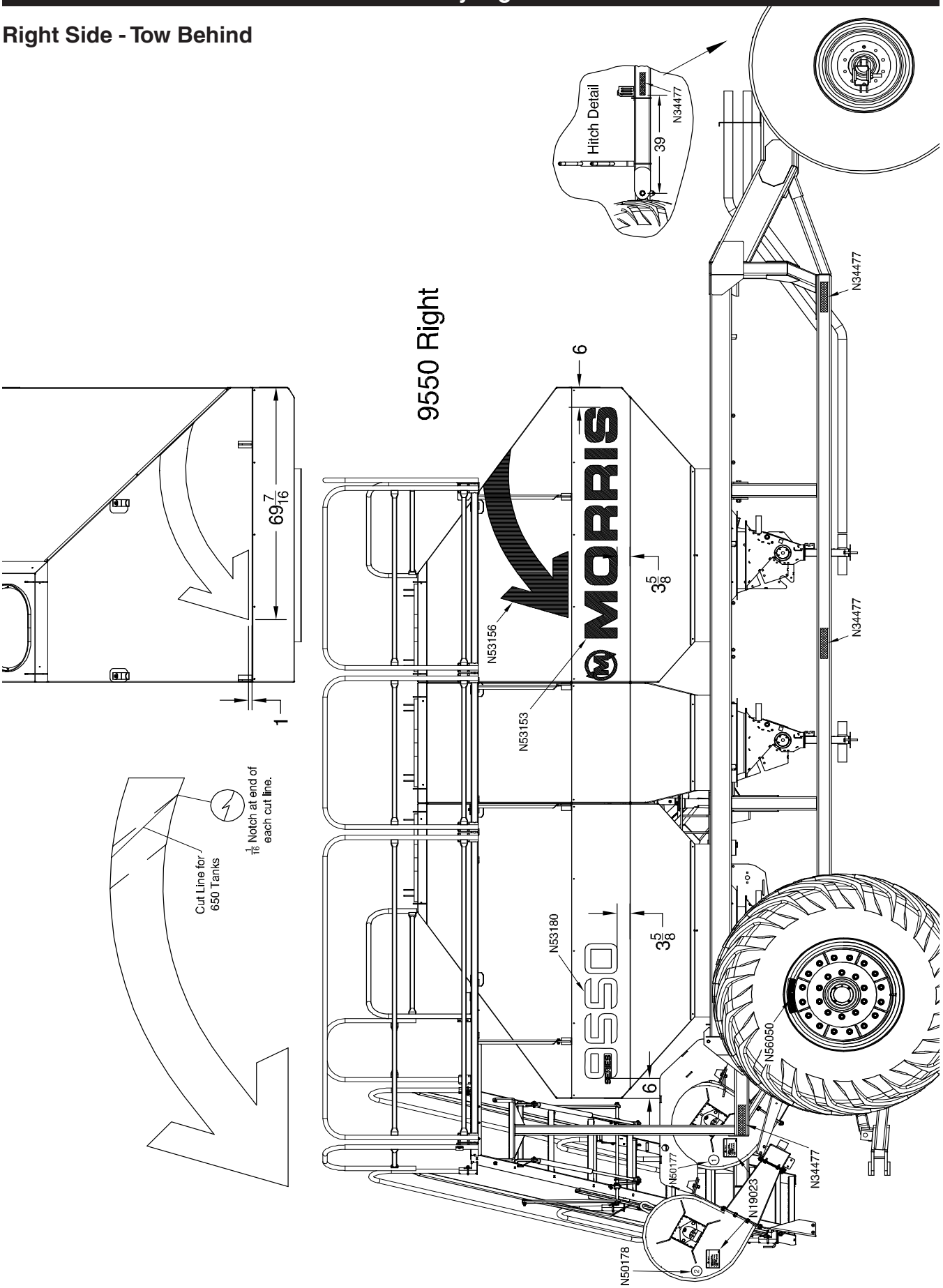

Top

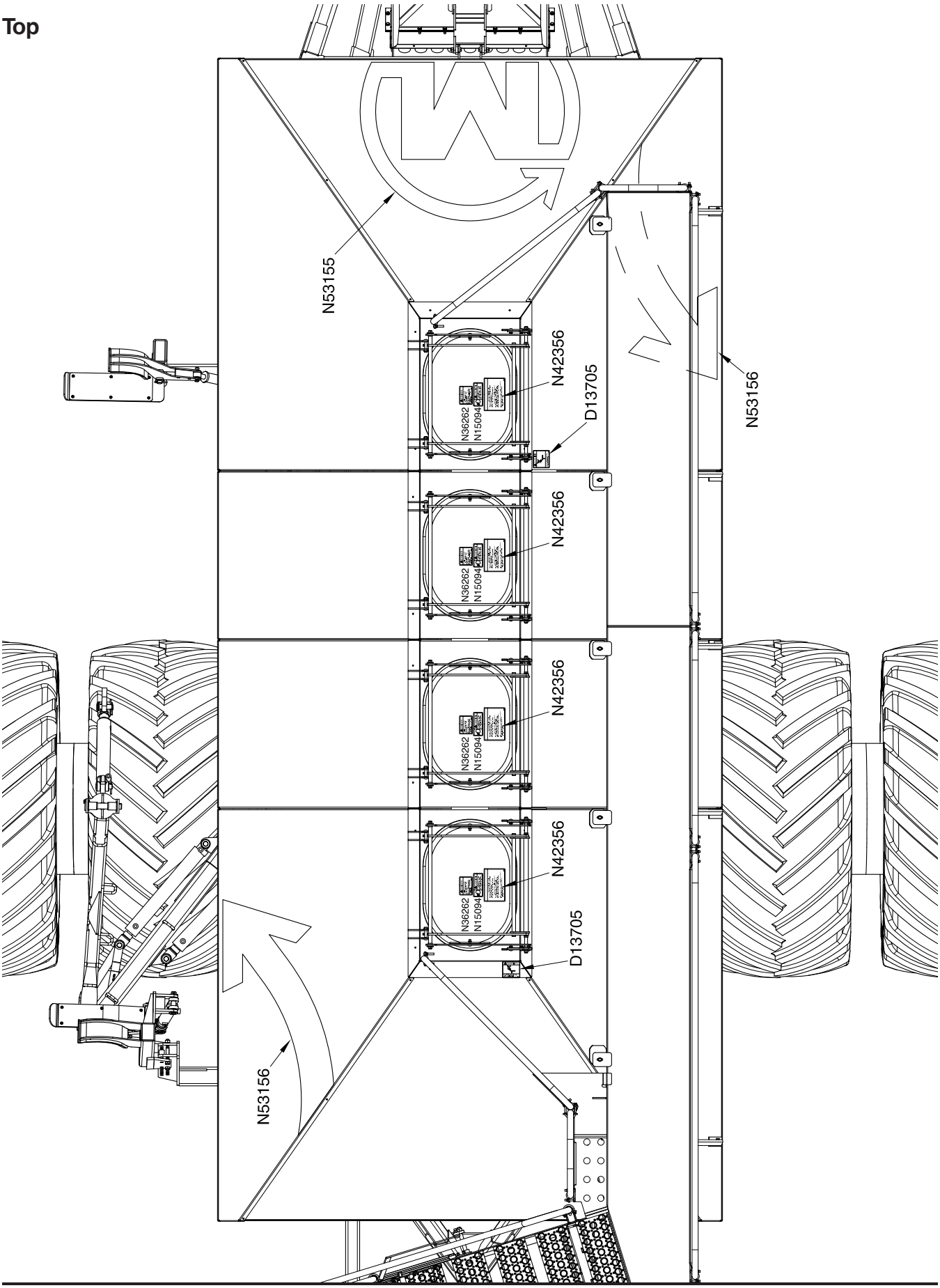
N53155
N42356
D13705
N53156
N36262
N150944
N42356
N36262
N150944
N42356
N36262
N150944
N42356
D13705
N53156
N36262
N150944

ICT Decals

Right Side - Tow Behind Shown

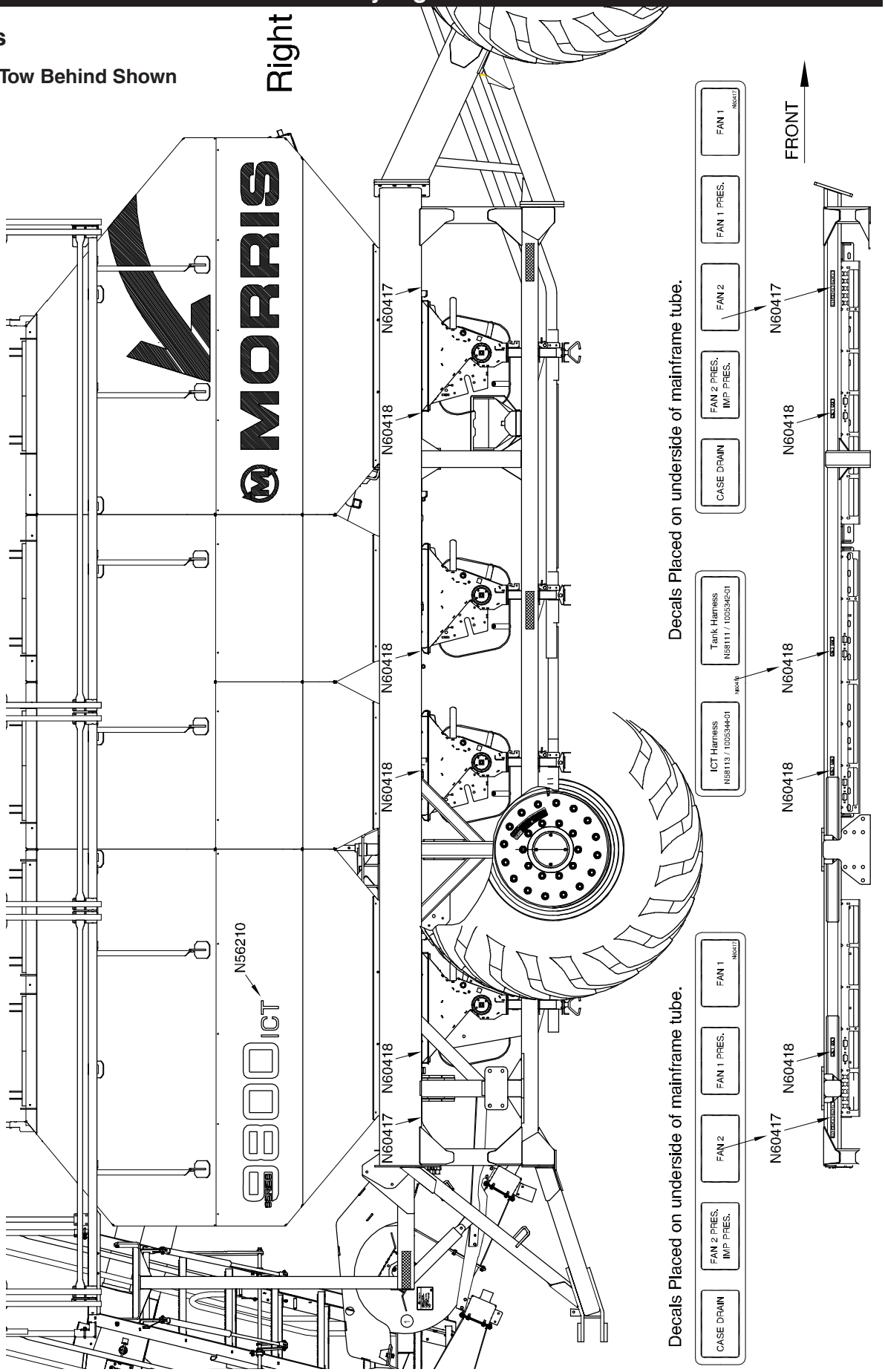

ICT Meter Body

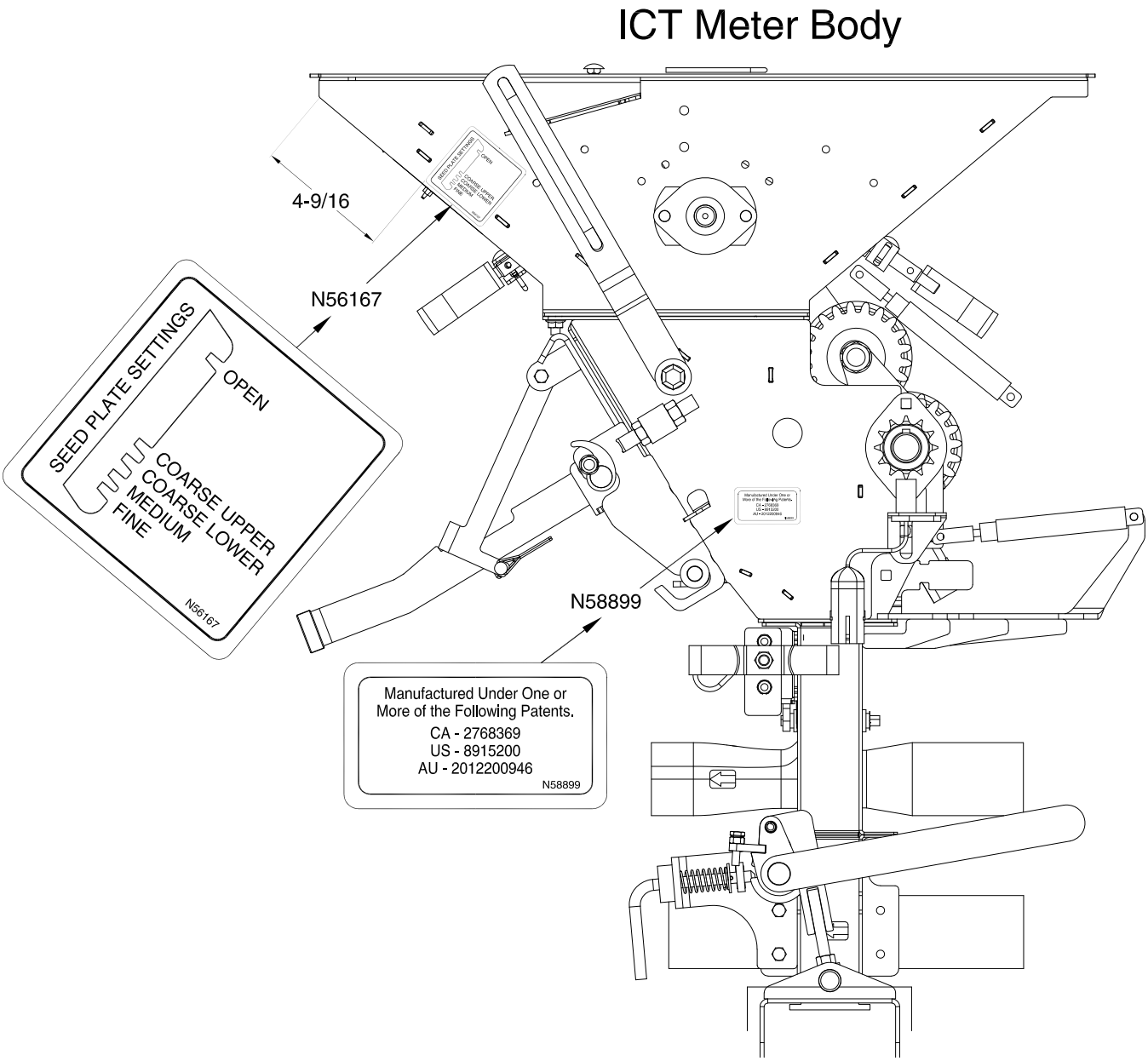

Section 21:
Brakes

Section Contents

Hydraulics and Electrical - Version 1 21-2
Hydraulics and Electrical - Version 2 21-4
Brake Caliper 21-6

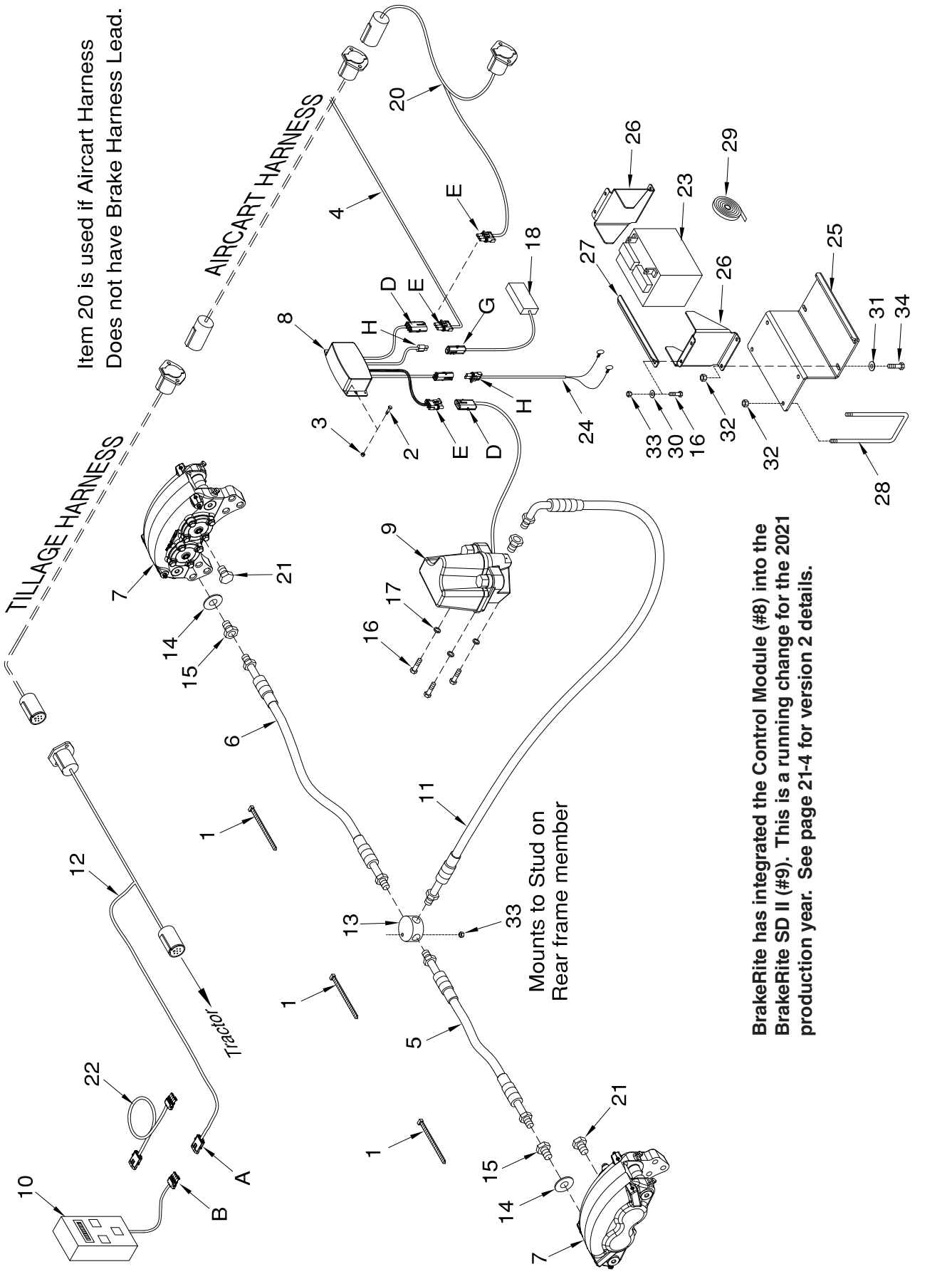
Item 20 is used if Aircart Harness
Does not have Brake Harness Lead.
AIRCART HARNESS
TILLAGE HARNESS
Tractor
Mounts to Stud on
Rear frame member
BrakeRite has integrated the Control Module (#8) into the BrakeRite SD II (#9). This is a running change for the 2021 production year. See page 21-4 for version 2 details.

Brakes - Hydraulics and Electrical - Version 1

Item	Part No.	Description	Qty
1	D-4951	Nylon Tie Strap - 7 3/8 Lg	12
2	N16563	Slotted Screw - #8 x 1 1/4 Lg	4
3	N16564	Locknut - #8 Serrated	4
4	* * * * *	Air Cart Lighting Harness	1
5	N53387	Brake Hose - 1/4 x 150 Lg	1
6	N53388	Brake Hose - 1/4 x 180 Lg	1
7	**N70884**	Brake Caliper Replacement Kit	2
8	N53394	Control Module - 4834200	1
9	N53396	BrakeRite SD II - Electric/Hydraulic Acturator - 4834100	1
10	N53397	BrakeRite SD AG Controller - 4858800	1
11	N53398	Brake Hose - 1/4 x 24	1
12	N53650	Wiring Harness - Cab Controller - 96 Lg Brake Lead	1
13	N53652	Brass Tee Fitting	1
14	N53653	Brass Brake Washer - 1/2 ID x 7/8 OD	2
15	N53654	Brass Adaptor - Brake Fitting	2
16	W-471	Bolt - 5/16 x 1 Lg	5
17	W-522	Lockwasher - 5/16	3
18	N53393	BrakeRite SD Breakaway switch - 4834500	1
19	N53395	Brakerite SD Battery Cable - 4834400 - Optional battery hook up (Not Shown)	1
20	N53651	Wiring Harness - Brake Connector - 36 Lg Brake Lead	1
21	N55840	Plug - 5/16 MORB	2
22	N56076	Extension Harness - Cab Controller - 10 ft Lg	1
23	N53577	Battery - 250 CCA - Interstate #SP-30	1
24	N53571	Battery Cable -	1
25	N53569	Holder Plate - Battery	1
26	N53578	Bracket - Battery	2
27	N53579	Clamp Strap - Battery	1
28	N19723	U-Bolt- 3/8 Dia.x 4.063 x 6.938 UL	2
29	N15716	Seal Strip - 1/4 x 1/Foot	3 FT
30	D-5488	Washer - 11/32 ID x 11/16 OD x 16 Gauge	2
31	D-5579	Washer - 13/32 ID x 1 OD x 16 Gauge	4
32	D-5279	Locknut - 3/8 Serrated	8
33	C32925	Locknut - 5/16 Center	3
34	W-475	Bolt - 3/8 x 1 Lg	4
A	N29151	Weather Pak Connector - Shroud - 4 Male Terminals	
B	N29152	Weather Pak Connector - Tower - 4 Female Terminals	
C	N29153	Seal Connector - BLACK - 4 Pin	
D	N27613	Weather Pak Connector - Shroud - 3 Male Terminals	
E	N27614	Weather Pak Connector - Tower - 3 Female Terminals	
F	N27615	Seal Connector - BLACK - 3 Pin	
G	N29384	Weather - Pack - Shroud - 2 Male Terminals	
H	N29385	Weather - Pack - Tower - 2 Female Terminals	

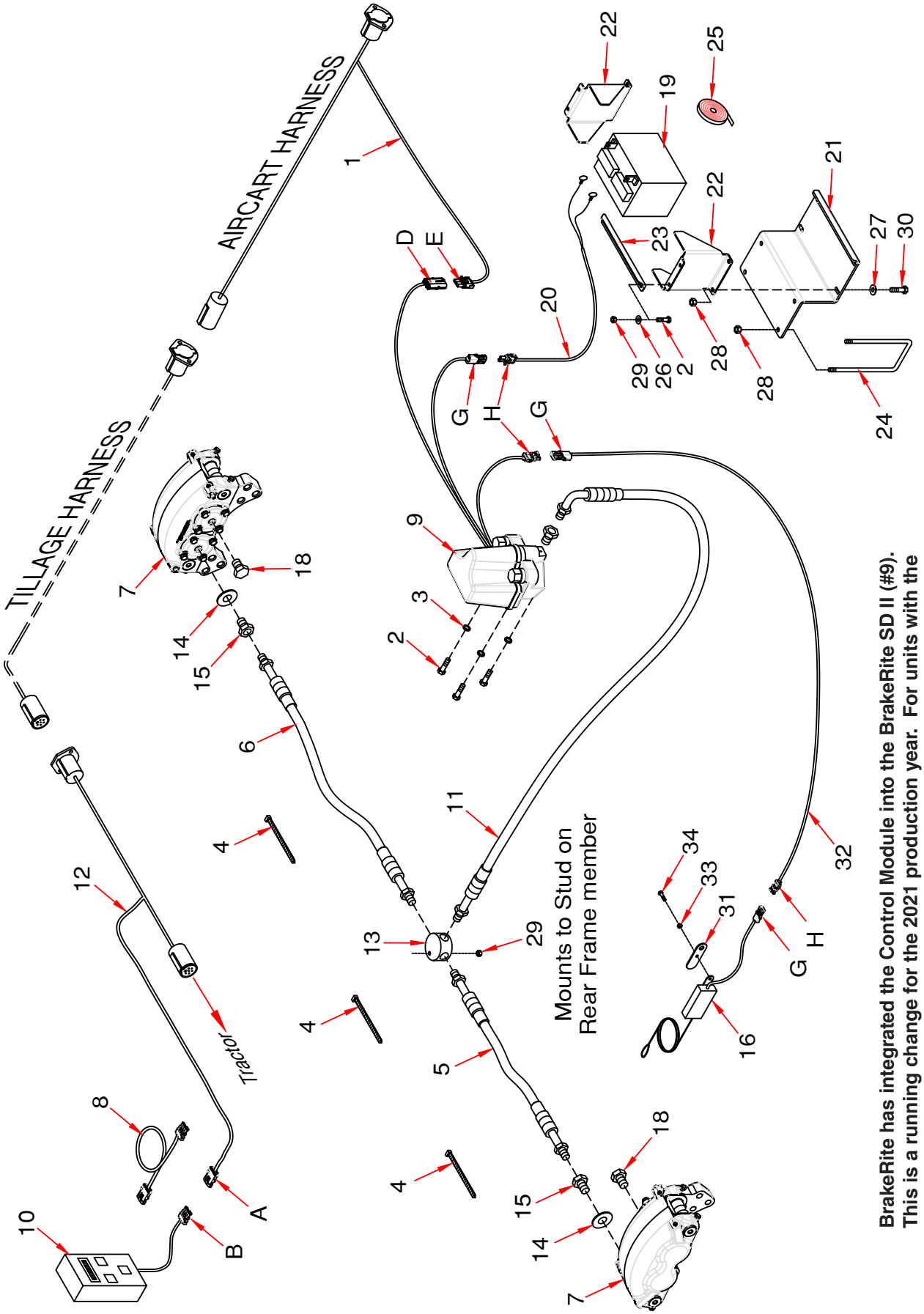
AIRCART HARNESS
TILLAGE HARNESS
Tractor
Mounts to Stud on
Rear Frame member
BrakeRite has integrated the Control Module into the BrakeRite SD II (#9).
This is a running change for the 2021 production year. For units with the
Control Module see page 21-2 for details.

Brakes - Hydraulics and Electrical - Version 2

Item	Part No.	Description	Qty
1	N58765	Air Cart Lighting Harness - 588 Lg	1
2	W-471	Bolt - 5/16 x 1 Lg	5
3	W-522	Lockwasher - 5/16	3
4	D-4951	Nylon Tie Strap - 7 3/8 Lg	12
5	N53387	Brake Hose - 1/4 x 150 Lg	1
6	N53388	Brake Hose - 1/4 x 180 Lg	1
7	**N70884**	Brake Caliper Replacement Kit	2
8	N56076	Extension Harness - Cab Controller - 10 ft Lg	1
9	**N71445**	**BrakeRite EHB - Electric/Hydraulic Acturator/Control Module - K68-001-02**	**1**
10	N53397	BrakeRite SD AG Controller - 4858800	1
11	N53398	Brake Hose - 1/4 x 24	1
12	N53650	Wiring Harness - Cab Controller - 96 Lg Brake Lead	1
13	N53652	Brass Tee Fitting	1
14	N53653	Brass Brake Washer - 1/2 ID x 7/8 OD	2
15	N53654	Brass Adaptor - Brake Fitting	2
16	N53393	BrakeRite SD Breakaway switch - 4834500	1
17	N53395	Brakerite SD Battery Cable - 4834400 - Optional battery hook up (Not Shown)	1
18	N55840	Plug - 5/16 MORB	2
19	N53577	Battery - 250 CCA - Interstate #SP-30	1
20	N53571	Battery Cable -	1
21	N53569	Holder Plate - Battery	1
22	N53578	Bracket - Battery	2
23	N53579	Clamp Strap - Battery	1
24	N19723	U-Bolt- 3/8 Dia.x 4.063 x 6.938 UL	2
25	N15716	Seal Strip - 1/4 x 1/Foot	3 FT
26	D-5488	Washer - 11/32 ID x 11/16 OD x 16 Gauge	2
27	D-5579	Washer - 13/32 ID x 1 OD x 16 Gauge	4
28	D-5279	Locknut - 3/8 Serrated	8
29	C32925	Locknut - 5/16 Center	3
30	W-475	Bolt - 3/8 x 1 Lg	4
31	N73163	Bracket Mount - Brakes Breakaway	1
32	N73164	Harness - Brakes Breakaway - Cart	1
33	N22778	Locknut - 1/4	1
34	W-469	Bolt - 1/4 x 3/4 Lg	1
	N52683	Brake Hose Kit - (Contains Items 5, 6, 11, 13, 14 &15)	
	N53391	Brakerite EHB Kit - (Contains Items 9, 16 & 17)	
	N73162	Breakaway Kit - (Contains Items 31,32, 33 & 34)	
A	N29151	Weather Pak Connector - Shroud - 4 Male Terminals	
B	N29152	Weather Pak Connector - Tower - 4 Female Terminals	
C	N29153	Seal Connector - BLACK - 4 Pin	
D	N27613	Weather Pak Connector - Shroud - 3 Male Terminals	
E	N27614	Weather Pak Connector - Tower - 3 Female Terminals	
F	N27615	Seal Connector - BLACK - 3 Pin	
G	N29384	Weather - Pack - Shroud - 2 Male Terminals	
H	N29385	Weather - Pack - Tower - 2 Female Terminals	

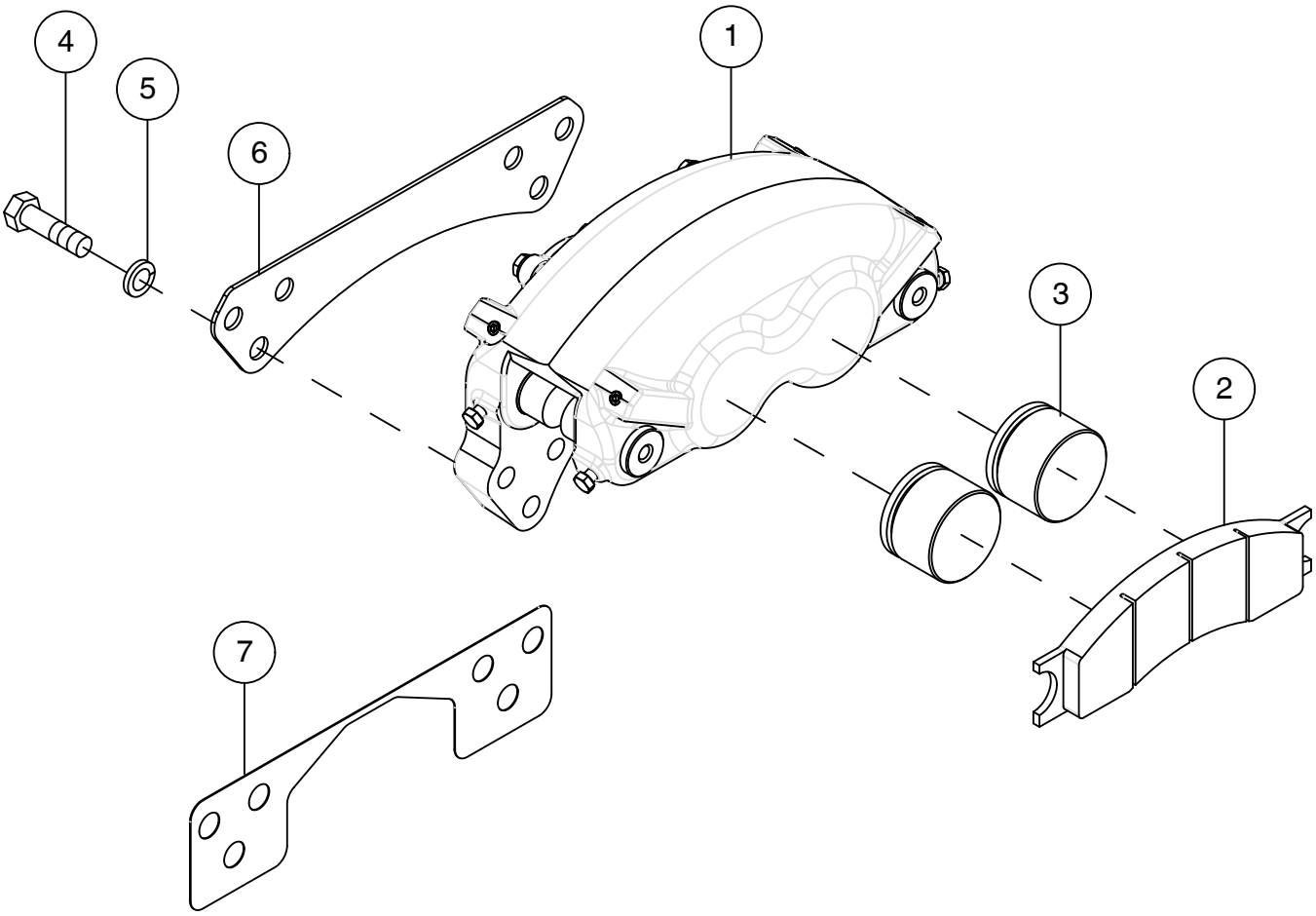

Item	Part No.	Description	Qty
1	N70881	Brake Caliper - Contains N53452, N53453 & N53451	1
2	N53452	Brake Pad Kit - 2 pads	1
3	N53453	Brake Piston	4
4	C-695	Bolt - 3/4 x 2	6
5	W-527	Lockwasher - 3/4	6
6	N70871	Shim Plate - 10 Ga - Add shim if required	1
7	N53588	Shim Plate - 22 Ga - Add shim as required for proper caliper setting - Option	4
	N53451	Seal Kit	1
	N70884	Brake Caliper Replacement Kit - Includes Items 1 to 6	

Section 22:
ICT Metering System

Section Contents

ICT Meter Body 22-2
- Module Assembly 22-2
- Swing Arm Assembly - Prior to 2022 22-4
- Swing Arm Assembly - 2022 to Present 22-5
- Access Door Assembly 22-6
- Agitator Shaft Assembly 22-8
- Blank Off 22-10
- Clean Out Door 22-11

Single Shoot Collector Body 22-12
Double Shoot Collector Body 22-14
ICT Hydraulics 22-16
- 9535, 9650, 9800 and 91000 - 2022 22-16
- 9450, 9550 and 9680 - 2022 22-18
- 9365, 9445 and 9555 - 2022 22-20
- 9535, 9650, 9800 and 91000 - Prior to 2022 22-22
- 9450, 9550 and 9680 - Prior to 2022 22-24
- 9365, 9445 and 9555 - Prior to 2022 22-26

ICT Transmissions 22-28
- Front - 9365, 9450, 9535 (Prior to 2017) 22-28
- Front - 9365, 9450, 9535 22-30
- Rear - 9365, 9450, 9535 (Prior to 2017) 22-32
- Rear - 9365, 9450, 9535 22-34
- 9445, 9550, 9650, 9800 and 91000 (Prior to 2017) 22-36
- 9445, 9550, 9650, 9800 and 91000 22-38
- Rear - 9445, 9550, 9650 Between - Prior to 2016 22-40
- Drive Coupler 22-43

Valve Block - N48750 22-44
Valve Block - N58320 22-45
Sample Collection Tray 22-46
Transmission Orbit Motor 22-50

ICT Meter Body Module Assembly

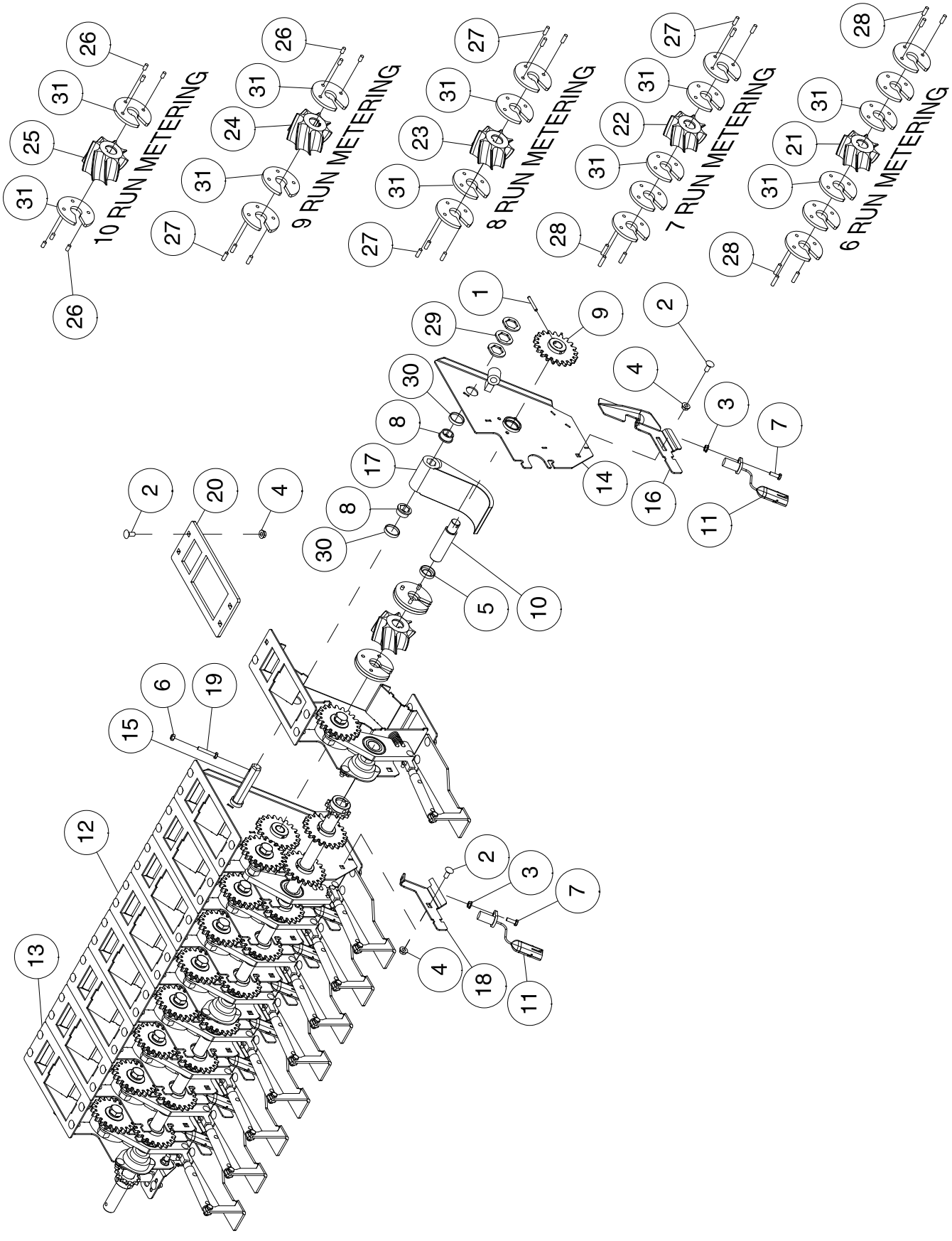

ICT Metering Body - Module Assembly

Item	Part No.	Description	Qty
1	C-3245	Spiral Pin - .204 Dia x 1 1/2 Lg	18
2	D-5259	Carriage Bolt - 5/16 x 3/4 Lg	88
3	D-5277	Lock Nut - 1/4 Flange Serrated	10
4	D-5278	Lock Nut - 5/16 Flange	86
5	N71918	Seal - 3/4 ID x 1 1/4 OD x 1/4 Thick	9
6	N22778	Locknut - 1/4 Nylon Insert	19
7	N36597	Hex Bolt - 1/4 x 3/4 Lg	18
8	N49394	Nylon Bushing	20
9	N55692	Drive Gear	9
10	N50039	Drive Shaft	9
11	N50070	Hall Effect Sensor - Topcon	10
12	N50265	Meter Body - Stainless Steel - Center	AsReq
13	N50283	Meterbody - Stainless Steel - Left	1
14	N50284	Meterbody - Stainless Steel - Right	1
15	N50296	Hex Shaft - 3/4 x 41 Lg - 9 wide	1
	N51537	Hex Shaft - 3/4 x 45 1/4 Lg - 10 wide	
16	N55192	Meter Shaft Stop	1
		Item 16 **used on end Meterbody and adjacent to Blanked-Off openings**	
17	N50744	Seedplate	9
18	N64789	Sensor Bracket	8
19	N53335	Hex Bolt - 1/4 x 1 1/2 Stainless Steel	1
20	N53526	Seal Strip - 1/4 Thick	9
21	N66896	Metering Wheel - 6 Wide	AsReq
22	N42127	Metering Wheel - 7 Wide	AsReq
23	N42128	Metering Wheel - 8 Wide	AsReq
24	N42129	Metering Wheel - 9 Wide	AsReq
25	N42130	Metering Wheel - 10 Wide	AsReq
26	N53693	Nylon Rod - 1/4 Dia x 1/2 Lg	AsReq
27	N53694	Nylon Rod - 1/4 Dia x 3/4 Lg	AsReq
28	N53695	Nylon Rod - 1/4 Dia x 1 Lg	AsReq
29	N56166	Hex Washer - 7/8	3
30	N58109	Shaft Seal - 1 ID x 1 3/8 OD	AsReq
31	N50083	Spacer - 1/4 Thick	AsReq
	N64530	Acrylic Caulking - Grey - 300 ml Tube	
	N63944	Cup Assembly - Less Meter Wheel	

ICT Meter Body
Swing Arm Assembly - Prior to 2022

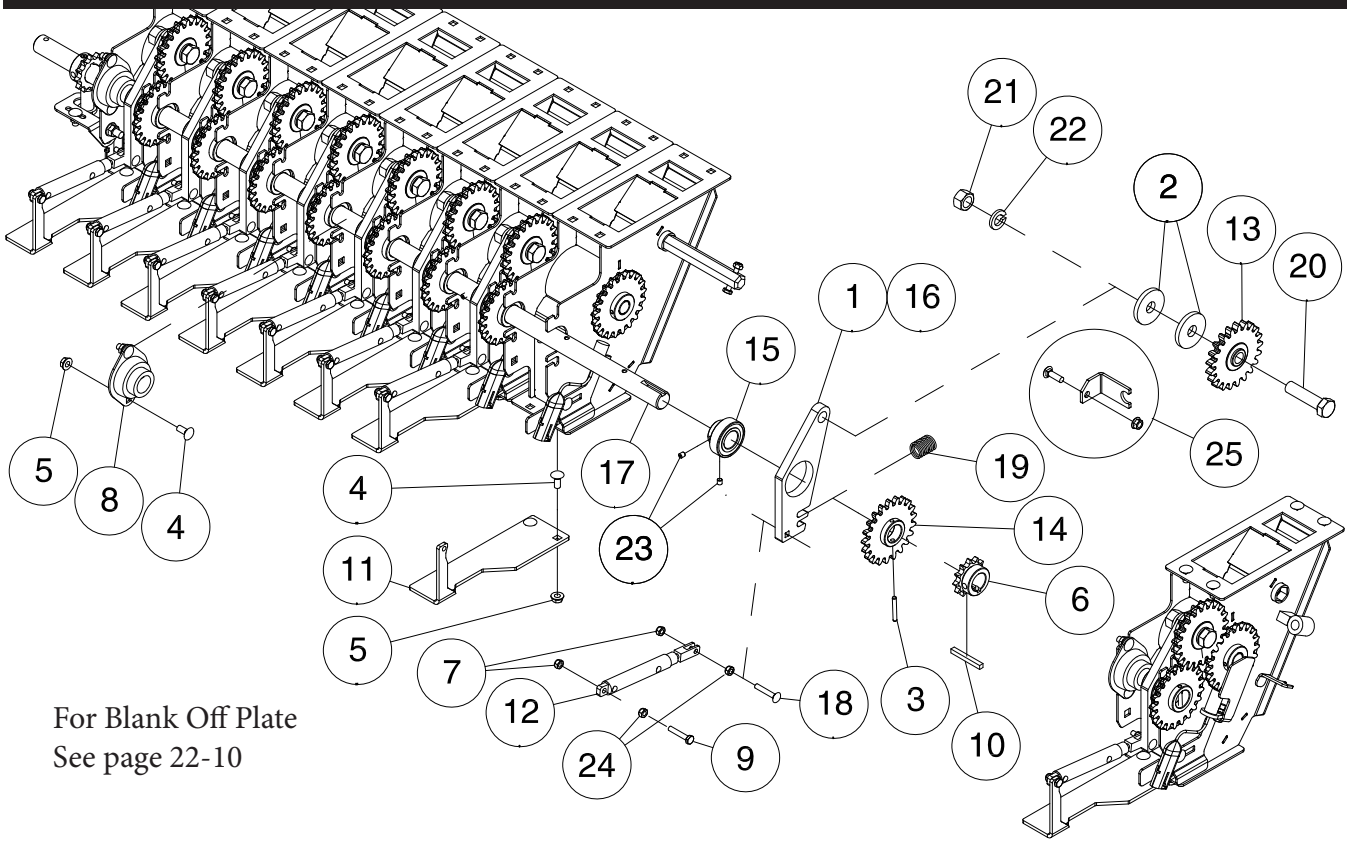

For Blank Off Plate
See page 22-10

Item	Part No.	Description	Qty
1	N58019	Idler Arm - Includes item 15 and 23	9
2	N49456	Washer - 0.635 ID x 1.995 OD x 1/4 Thick	18
3	C-3245	Spiral Pin - .204 Dia x 1 1/2 Lg	18
4	S33420	Carriage Bolt - 5/16 x 1 Lg	40
5	D-5278	Lock Nut - 5/16 Flange	38
6	D17946	Sprocket - 40B12	2
7	N22778	Locknut - 1/4 Nylon Insert	19
8	N53889	Flangette Bearing - 1 Bore	3
9	W-1552	Hex Bolt - 1/4 x 1 Lg	18
10	S10730	Keystock - 1/4 x 1/4 x 1 1/4 Lg	1
11	N49388	Mount Plate	9
12	N49389	Brass Cylinder -1/2 x1 Stroke	9
	N62086	Seal Kit for N49389 Brass Cylinder	
	N62087	Brass Assembly Tool Kit - required to install Seals	
13	N49793	Idler Gear Assembly	9
14	N55691	Drive Gear	9
15	N58955	Roller Bearing - 1 Bore	9
16	N50282	Swing Arm Assembly - Contains Items (1, 2, 13, 20, 21 & 22)	9
17	N50294	Main Jackshaft	1
18	N50531	Carriage Bolt - 1/4 x 1 3/4	9
19	N50748	Spring - 0.867 O.D. x 2 1/4 Lg	9
20	W-501	Hex Bolt - 5/8 x 2 1/2 Lg	9
21	W-517	Hex Nut - 5/8	9
22	W-526	Lockwasher - 5/8	9
23	S-1202	Set Screw - 1/4 Dia x 1/4 Lg	18
24	W-512	Hex Nut - 1/4	18
25	N71898	Spring Bracket Kit - Includes the following items: Prior to 2021 production	
	D-5259	Carriage Bolt - 5/16 x 3/4 Lg	
	D-5278	Lock Nut - 5/16 Flange	
	A71897	Bracket - Spring Retainer	

ICT Meter Body
Swing Arm Assembly - 2022 to Present

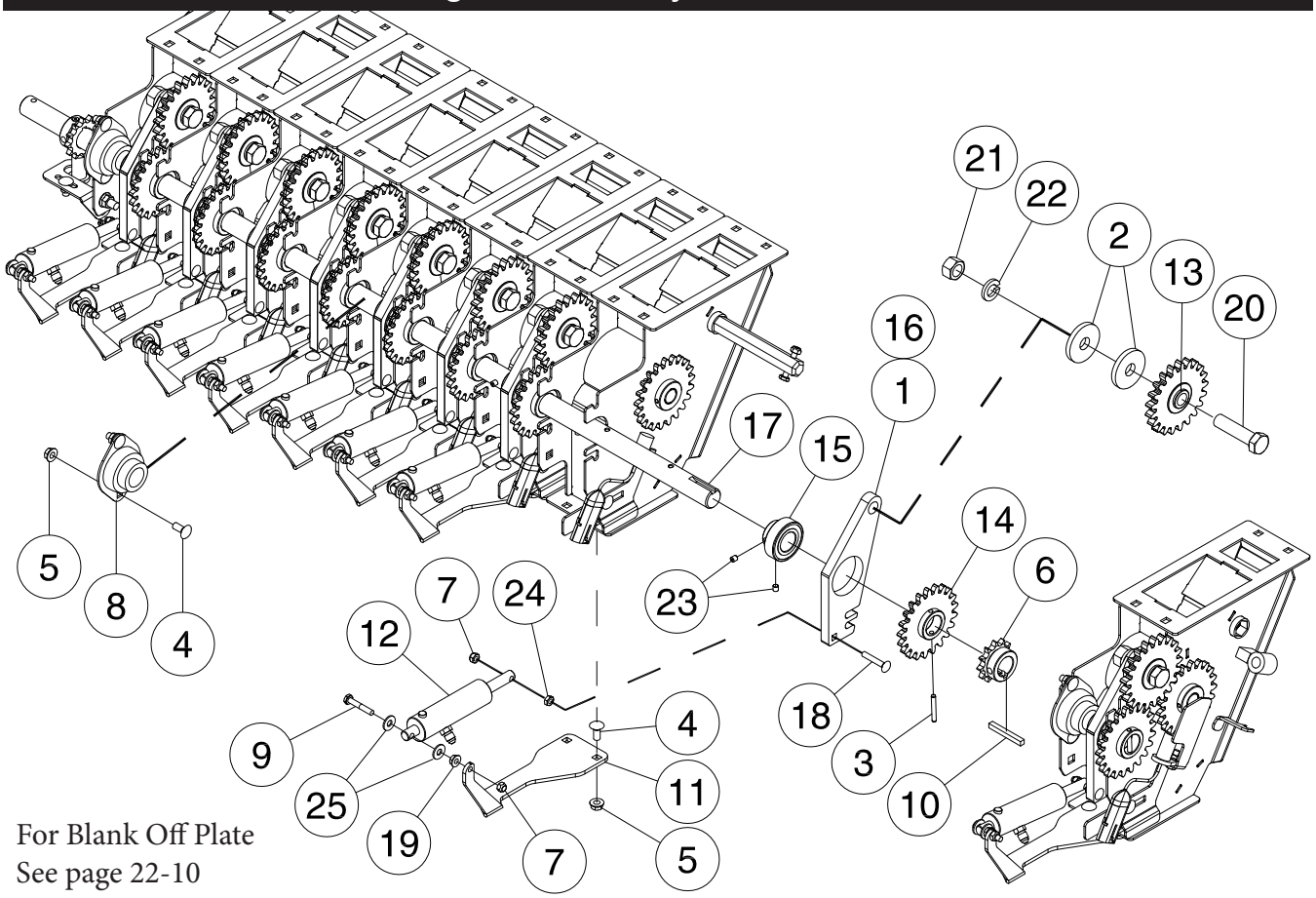

For Blank Off Plate
See page 22-10

Item	Part No.	Description	Qty
1	N58019	Idler Arm - Includes item 15 and 23	9
2	N49456	Washer - 0.635 ID x 1.995 OD x 1/4 Thick	18
3	C-3245	Spiral Pin - .204 Dia x 1 1/2 Lg	18
4	S33420	Carriage Bolt - 5/16 x 1 Lg	40
5	D-5278	Lock Nut - 5/16 Flange	38
6	D17946	Sprocket - 40B12	2
7	N22778	Locknut - 1/4 Nylon Insert	19
8	N53889	Flangette Bearing - 1 Bore	3
9	N36128	Hex Bolt - 1/4 x 1 1/2 Lg	9
10	S10730	Keystock - 1/4 x 1/4 x 1 1/4 Lg	1
11	N49388	Mount Plate	9
12	N71837	Cylinder ICT - 1 x 1 Stroke - (Seal Kit N71849)	9
13	N49793	Idler Gear Assembly	9
14	N55691	Drive Gear	9
15	N58955	Roller Bearing - 1 Bore	9
16	N50282	Swing Arm Assembly - Contains Items (1, 2, 13, 20, 21 & 22)	9
17	N50294	Main Jackshaft	1
18	N50531	Carriage Bolt - 1/4 x 1 3/4	9
19	D-5277	Lock Nut - 1/4 Flange Serrated	9
20	W-501	Hex Bolt - 5/8 x 2 1/2 Lg	9
21	W-517	Hex Nut - 5/8	9
22	W-526	Lockwasher - 5/8	9
23	S-1202	Set Screw - 1/4 Dia x 1/4 Lg	18
24	W-512	Hex Nut - 1/4	18
25	S-1198	Flatwasher - 1/4	18

ICT Meter Body
Access Door Assembly

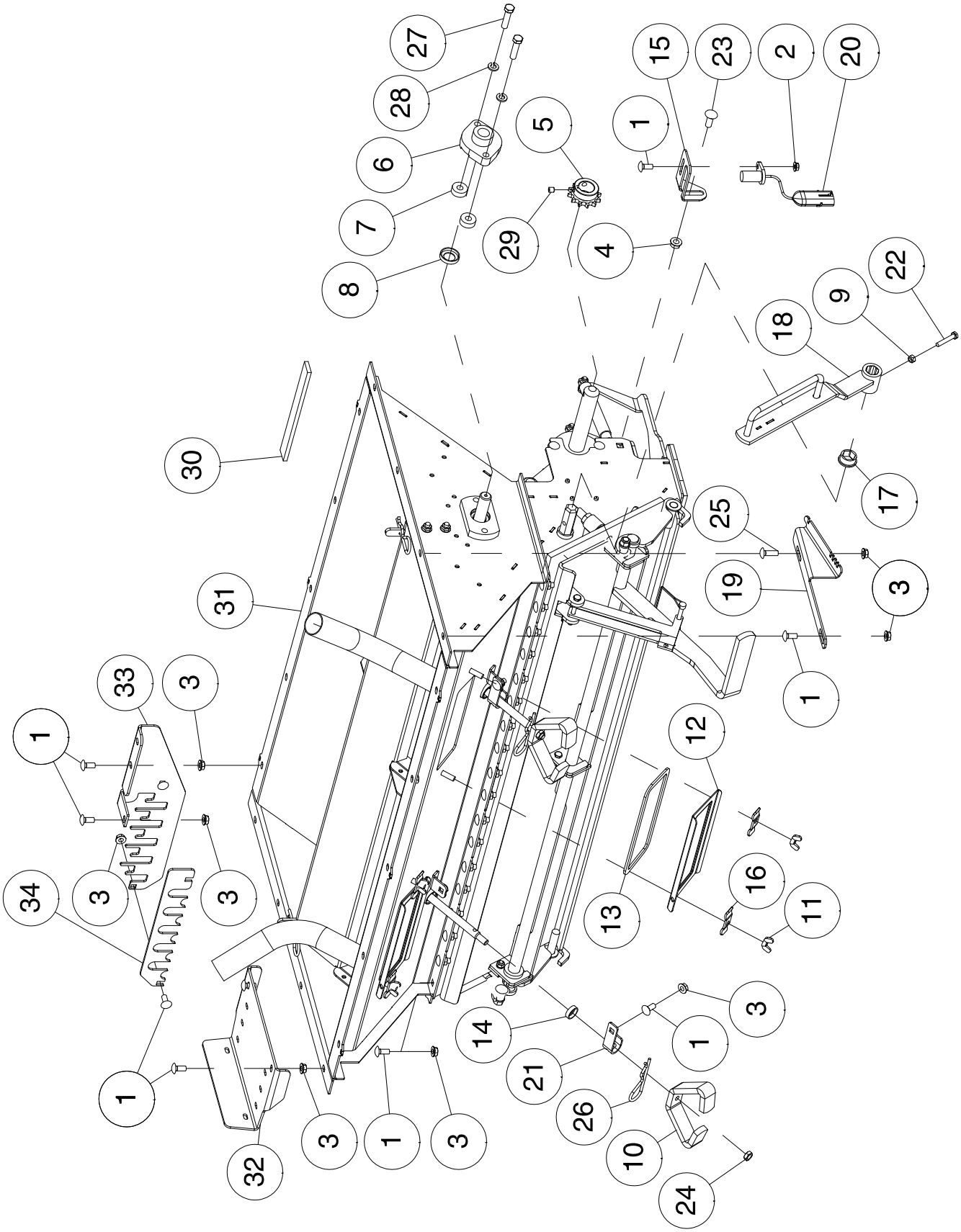

ICT Metering Body - Access Door Assembly

Item	Part No.	Description	Qty
1	D-5259	Carriage Bolt - 5/16 x 3/4 Lg	68
2	D-5277	Lock Nut - 1/4 Flange Serrated	10
3	D-5278	Lock Nut - 5/16 Flange	73
4	D-5279	Lock Nut - 3/8 Flange Serrated	1
5	D17946	Sprocket -40B12	2
6	N19269	Flange Bearing	2
7	N21602	Spacer - 13/32 ID x 1 OD x 3/8 Thick	4
8	N71918	Seal - 3/4 ID x 1 1/4 OD x 1/4 Thick	11
9	N22778	Locknut - 1/4 Nylon Insert	28
10	N27350	Wing-Lock Nut - 3/8	4
11	N31016	Wing Nut - 5/16	4
12	N31163	Access Door	2
13	N31174	Gasket	1
14	N36766	Seal - 1/2 ID	4
15	N45199	Sensor Bracket	1
16	N48782	Clip	4
17	N49394	Nylon Bushing	20
18	N50005	Adjustment Handle	1
19	N50006	Adjustment Bracket	1
20	N50070	Hall Effect Sensor - Topcon	10
21	N50086	Retainer Clip	4
22	N53335	Hex Bolt - 1/4 x 1 1/2 Lg Stainless Steel	10
23	P7C616	Carriage Bolt - 3/8 x 1 Lg	1
24	S-748	Hex Jam Nut - 3/8	4
25	S33420	Carriage Bolt - 5/16 x 1 Lg	1
26	W-131	Hairpin - #9 - 5/32 Dia	6
27	W-477	Hex Bolt - 3/8 x 1 1/2 Lg	4
28	W-523	Lockwasher - 3/8	6
29	W-554	Set Screw - 5/16 x 5/16 Allan Head	1
30	N15716	Seal Strip - 1/4 x 1 (9 Run - 11.1ft) (10 Run - 11.8ft)	1
31	N50250	Meterbody Extension - 9 Run	1
	N51520	Meterbody Extension - 10 Run - 9800 and 91000	1
32	N56209	Bracket Hose Holder	1
33	N58884	Hose Bracket	1
34	N59029	Hose Holder - Top	1

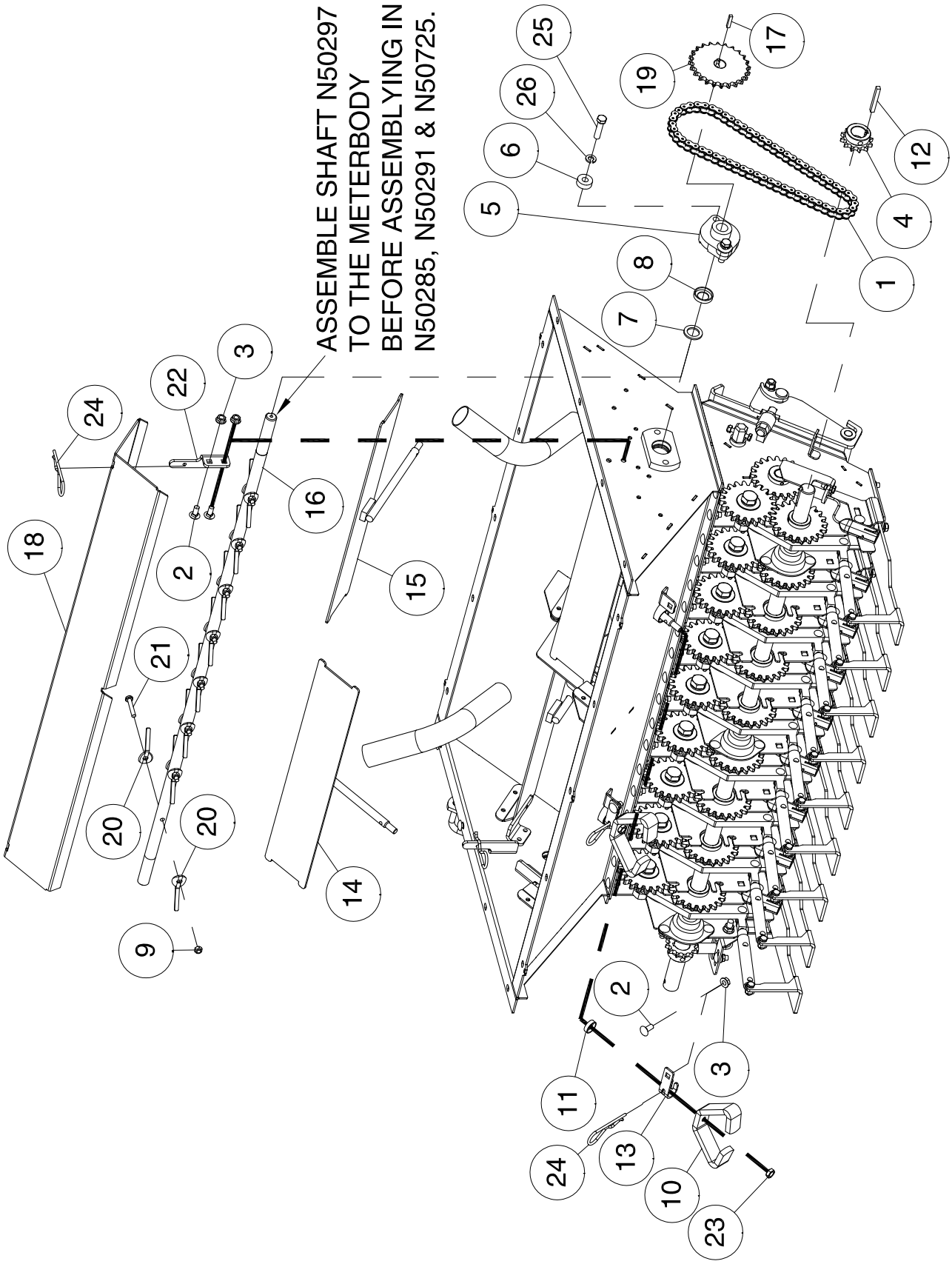
ASSEMBLE SHAFT N50297
TO THE METERBODY
BEFORE ASSEMBLYING IN
N50285, N50291 & N50725.
1
2
3
4
5
6
7
8
9
10
11
12
13
14
15
16
17
18
19
20
21
22
23
24
25
26

ICT Metering Body - Access Door Assembly

Item	Part No.	Description	Qty
1	D17953	Roller Chain - 30 1/2 Lg	1
2	D-5259	Carriage Bolt - 5/16 x 3/4 Lg	98
3	D-5278	Lock Nut - 5/16 Serrated Flange	95
4	D17946	Sprocket -40B12	2
5	N19269	Flange Bearing	2
6	N21602	Spacer - 13/32 ID x 1 OD x 3/8 Thick	4
7	N21612	Washer - .815 ID x 1.22 OD x 12 Ga	1
8	N71918	Seal - 3/4 ID x 1 1/4 OD x 1/4 Thick	11
9	N22778	Locknut - 1/4 Nylon Insert	28
10	N27350	Wing-Lock Nut - 3/8	4
11	N36766	Seal - 1/2 In Shaft	4
12	N37824	Key - 1/4 x 1/4 x 2 1/8	1
13	N50086	Retainer Clip	4
14	N50285	Shut off Handle - Back - 9 Run	2
	N51524	Shut off Handle - Back - 10 Run	2
15	N50291	Shut off Handle - Front - 9 Run	2
	N51525	Shut off handle - Front - 10 Run	2
16	N50297	Agitator shaft - 3/4 x 43 Lg - 9 Run	1
	N51538	Agitator shaft - 3/4 x 47 1/4 Lg - 10 Run	1
17	N50317	Key - 3/16 x 3/16 x 1	1
18	N50725	Panel - Gate Cover - 9 Run	1
	N51528	Panel - Gate Cover - 10 Run	1
19	N50734	Sprocket - 40A24	1
20	N53334	Agitator	17
21	N53335	Hex Bolt 1/4 x 1 1/2 Lg Stainless Steel	10
22	N53521	Plate - Runner	2
23	S-748	Hex Jam Nut - 3/8	4
24	W-131	Hairpin - #9 - 5/32 Dia	6
25	W-477	Hex Bolt - 3/8 x 1 1/2 Lg	4
26	W-523	Lockwasher - 3/8	6

ICT Meter Body
Blank Off

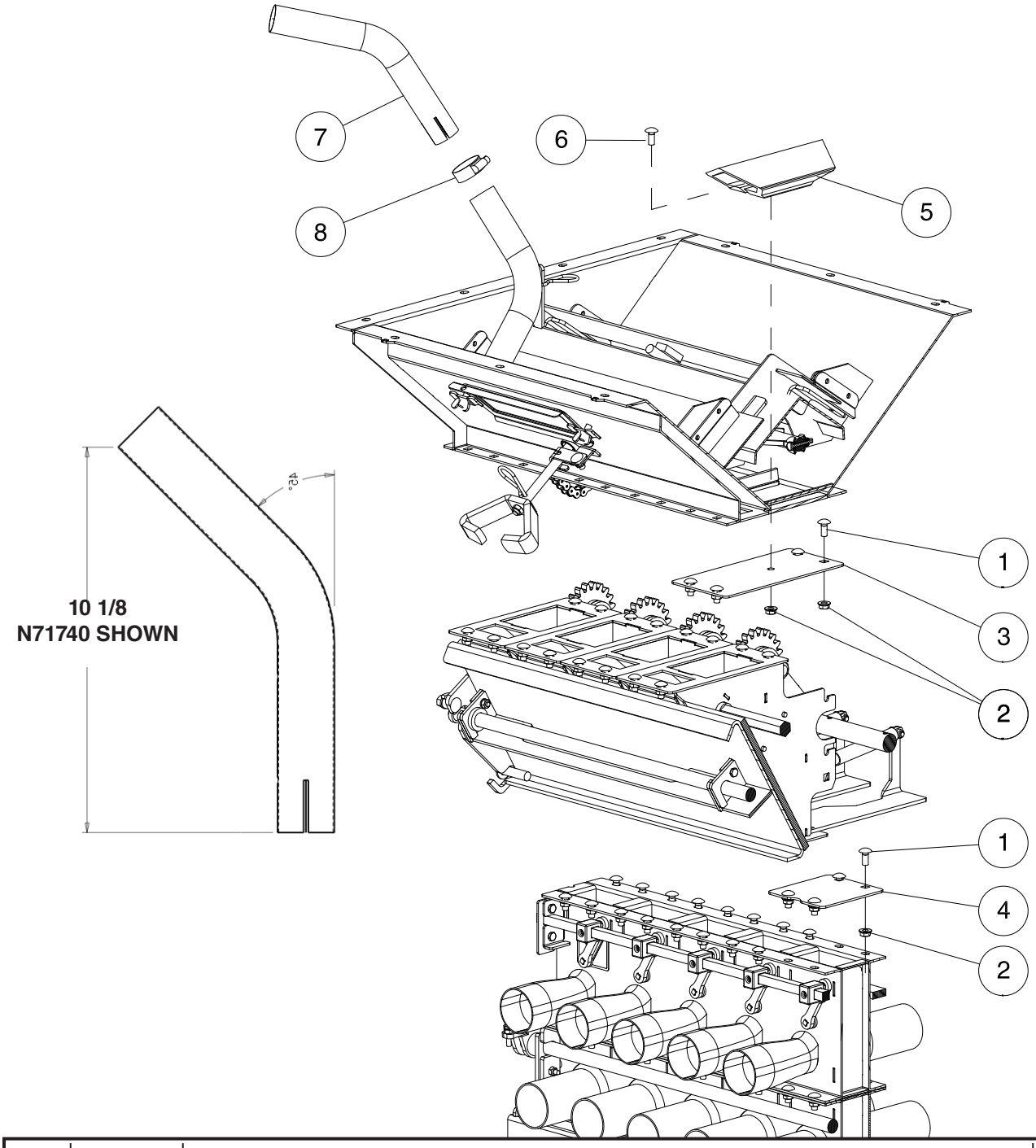

Item	Part No.	Description	Qty
1	D-5259	Carriage Bolt - 5/16 x 3/4	AsReq
2	D-5278	Lock Nut - 5/16 Flange	AsReq
3	N50298	Blank Off Cover	AsReq
4	N50299	Cover Plate	AsReq
5	**N53890**	Blank Off	AsReq
6	S33420	Carriage Bolt - 5/16 x 1	AsReq
7	N71740	Pressurization Pipe Extension - 10 1/8 Height	2
	N73311	Pressurization Pipe Extension - 17 5/16 Height	
8	N11906	Hose Clamp Stainless - 1 1/2 Dia	2

ICT Meter Body
Clean Out Door

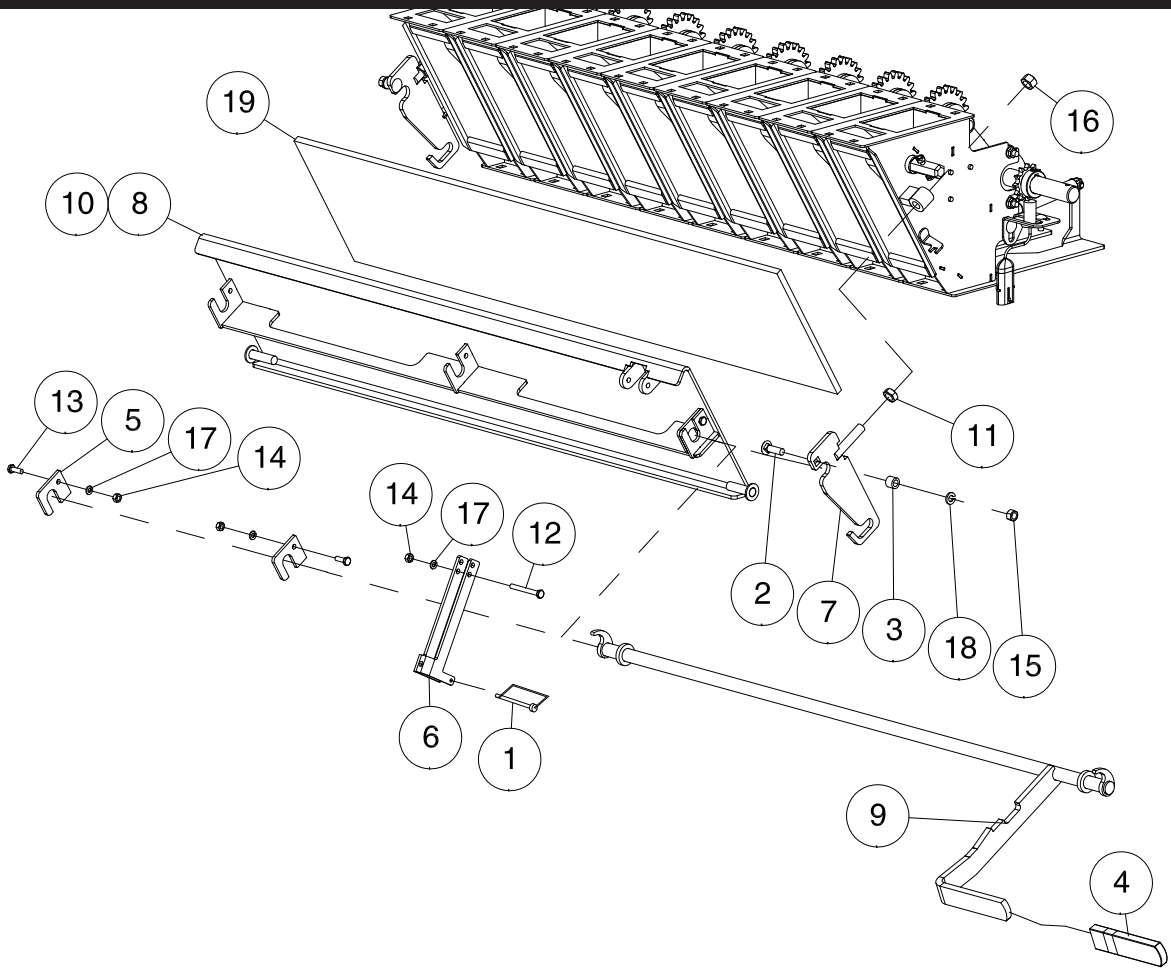

Item	Part No.	Description	Qty
1	N53471	Quick Pin - 1/4 x 2 1/2 Lg	1
2	D-5260	Carriage Bolt - 3/8 x 1-1/2 Lg	2
3	N19155	Spacer - 0.385 ID x 0.625 OD x 1/2 Lg	2
4	N32769	Handle Cover	1
5	N48612	Bearing Plate	3
6	N48621	Lock	1
7	N50306	Clamp Assembly	2
8	N50310	Cleanout Door - 9 Run	1
	N51530	Cleanout Door - 10 Run	1
9	N50311	Cam Shaft - 9 Run	1
	N51533	Cam Shaft - 10 Run	1
10	N50312	Door Cam Lock Assembly - 9 Run Includes Items (1, 4, 5, 6, 8, 9, 12, 13, 14 & 17)	1
	N51995	Door Cam Lock Assembly - 10 Run Includes Items (1, 4, 5, 6, 8, 9, 12, 13, 14 & 17)	1
11	S-1292	Hex Jam Nut - 1/2	2
12	S45280	Hex Bolt - 1/4 x 2 1/4 Lg	1
13	W-469	Hex Head - 1/4 x 3/4 Lg	3
14	W-512	Hex Nut - 1/4	4
15	W-514	Hex Nut - 3/8	2
16	W-516	Hex Nut - 1/2	2
17	W-521	Lockwasher - 1/4	4
18	W-523	Lockwasher - 3/8	2
19	N53527	Seal Strip - 10 x 40 Lg - 9 Run	1
	N55800	Seal Strip - 10 x 44 1/4 Lg - 10 Run	1

ICT Metering
Single Shoot Collector Body

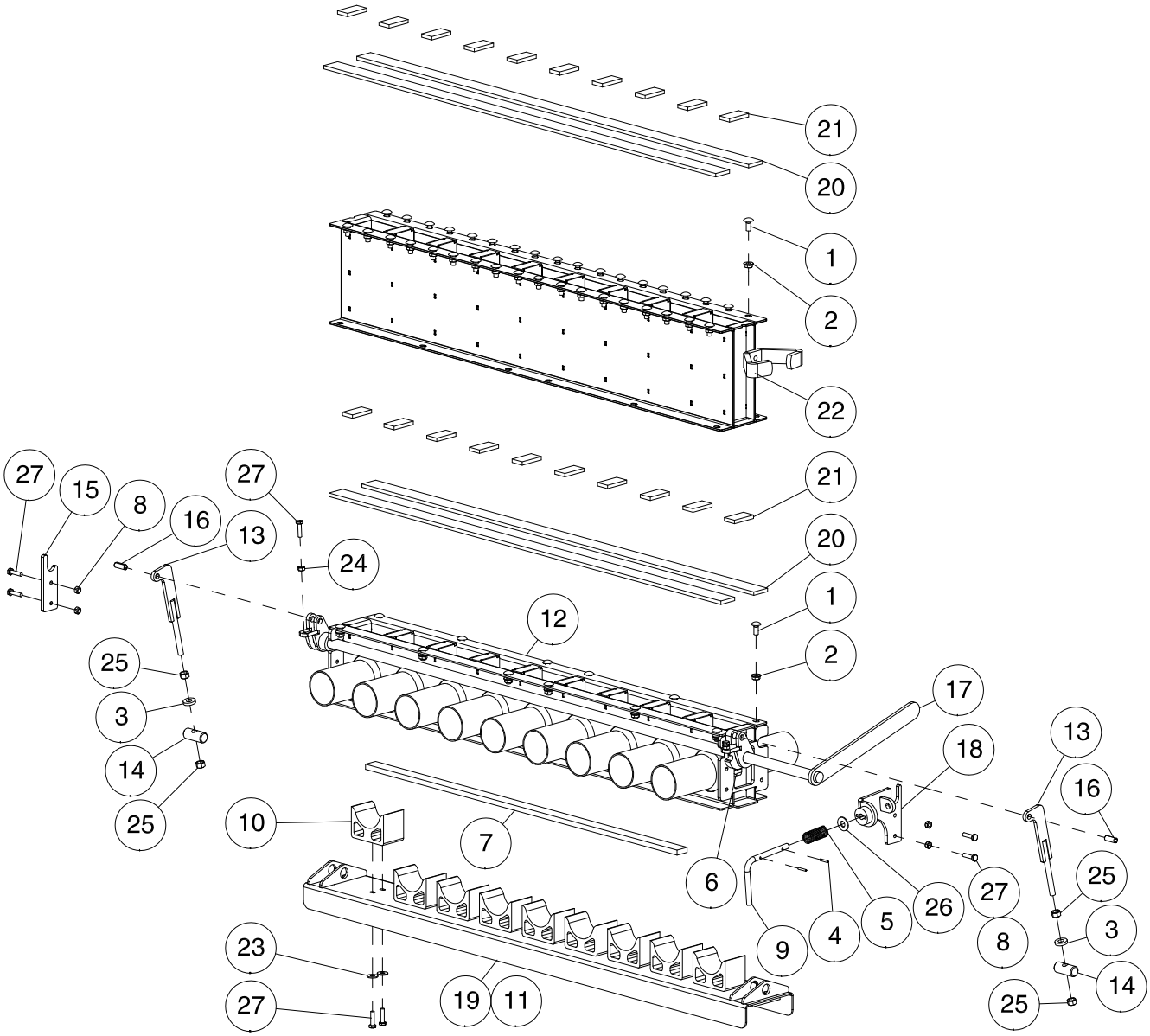

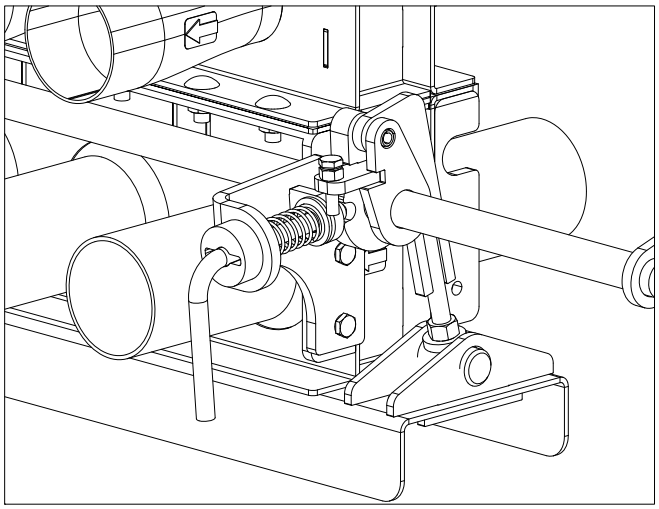

ICT Metering - Single Shoot Collector Body

Item	Part No.	Description	Qty
1	D-5259	Carriage Bolt - 5/16 x 3/4 Lg	48
2	D-5278	Lock Nut - 5/16 Flange	48
3	D-5500	Washer - 3/8 ID x 7/8 OD x 7Ga.	2
4	N11457	Roll Pin - 1/8 Dia x 3/4 Lg	2
5	N11847	Spring - 19/32 ID x 0.7188 OD x 1 3/4 Lg	1
6	N19000	Decal - Air Flow	2
7	N19449	Seal Strip - 3/8 x 1	8.4ft
8	N22778	Locknut - 1/4 Nylon Insert	4
9	N40688	Lock Pin	1
10	N50031	False Bottom Cup	9
11	N50274	False Bottom Assembly - 9 Run ICT (Includes 7, 10, 19, 23, 27)	1
	N53099	**False Bottom Assembly - 10 Run ICT - Tow Behind** (Includes 7, 10, 19, 23, 27)	
12	N50275	Single Shoot SS Collector Weldment - 9 Run ICT	1
	N53075	**Single Shoot SS Collector Weldment - 10 Run ICT**	
13	N51440	Cleanout Door Link	2
14	N51441	Pin - Cleanout Door Link	2
15	N51444	Mount - Rightside Cleanout Door	1
16	N53014	Spiral Spring Pin - 3/8 x 1 Lg	2
17	N53092	Crank - Lower Cleanout Door	1
	N53095	**Crank - Lower Cleanout Door - 10 Run ICT**	
18	N53098	Mount- Leftside Cleanout Door	1
19	N53302	Lower Cleanout Door SS - 9 Run ICT	1
	N53078	**Lower Cleanout Door SS - 10 Run ICT**	
20	N37190	Seal Strip - 1/4 x 1 3/8 (Bulk/ft x 78") - Ref N53528	2
21	N15716	Seal Strip - 1/4 x 1 (Bulk/ft x 20") - Ref N53530	2
22	N53532	Spacer Collector SS - 9 Run ICT	1
	N53522	**Spacer Collector SS - 10 Run ICT**	
23	S-1198	Washer - 5/16 ID x 3/4 OD x .065	18
24	W-512	Hex Nut - 1/4	2
25	W-514	Hex Nut - 3/8	4
26	W-538	Washer - 7/16 ID x 1 OD x 14 Ga	1
27	W-1552	Hex Bolt - 1/4 x 1 Lg	24

ICT Metering
Double Shoot Collector Body

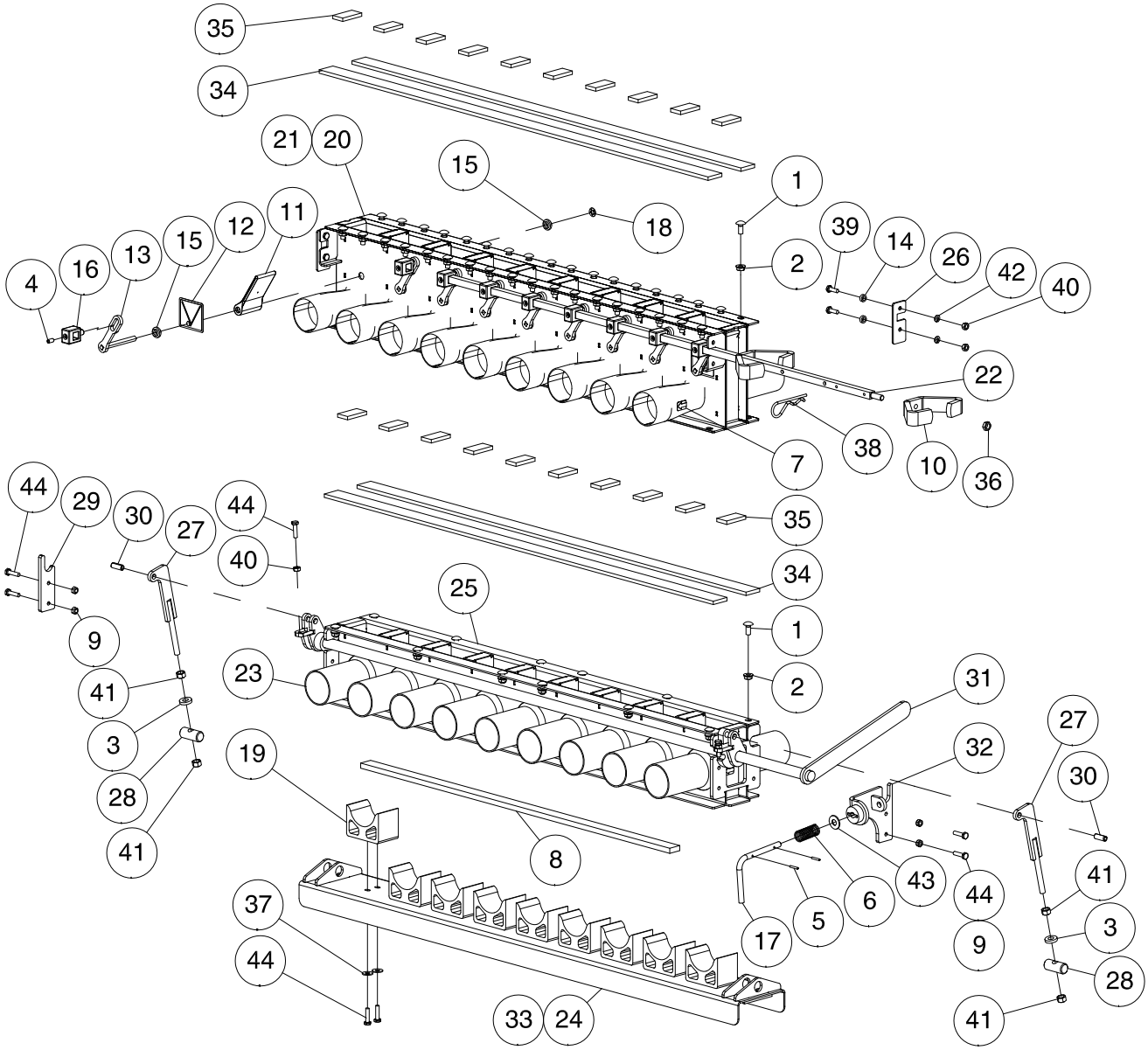

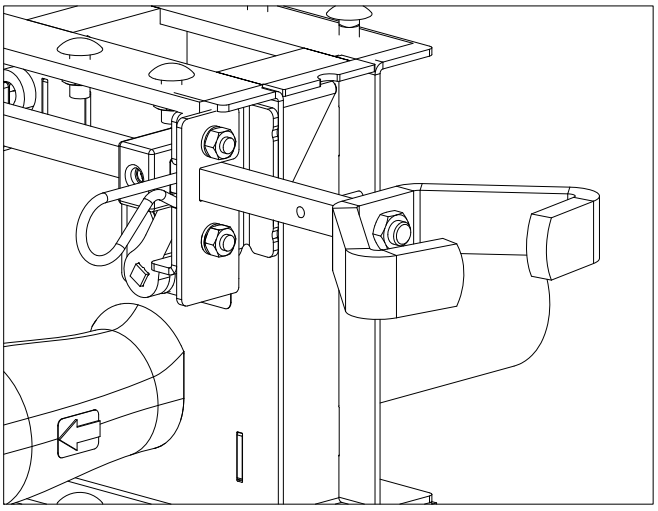

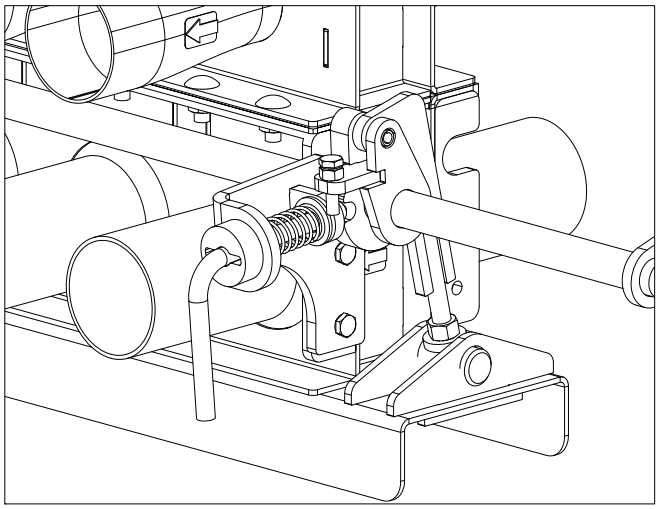

ICT Metering - Double Shoot Collector Body

Item	Part No.	Description	Qty
1	D-5259	Carriage Bolt - 5/16 x 3/4 Lg	48
2	D-5278	Lock Nut - 5/16 Flange	48
3	D-5500	Washer - 3/8 ID x 7/8 OD x 7 Ga.	2
4	N59895	Set Screw - 1/4 x 1/2 28 - UNF	9
5	N11457	Roll Pin - 1/8 Dia x 3/4 Lg	2
6	N11847	Spring - 19/32 ID x 0.7188 OD x 1 3/4 Lg	1
7	N19000	Decal - Air Flow	4
8	N19449	Seal Strip 3/8 x 1 x 2.583 Ft	8.4ft
9	N22778	Locknut - 1/4 Nylon Insert	4
10	N27350	Wing-Lock Nut - 3/8	1
11	N36114	Collector Valve	9
12	N36265	Decal - Double Shoot Valve	2
13	N37646	Flapper Handle Assembly	9
14	N37888	Spacer Bushing - .5 OD x .310 ID	4
15	N37917	Bushing - 3/4 OD x 3/8 Lg	18
16	N37957	Drive Connector - 1/2	9
17	N40688	Lock Pin	1
18	N42163	Bolt Retainer	9
19	N50031	False Bottom Cup	9
20	N50270	Weldment - 9 Run ICT	1
	N53318	**Weldment - 10 Run ICT**	
21	N50271	Double Shoot Collector Assembly - 9 Run ICT	1
	N53319	**Double Shoot Collector Assembly - 10 Run ICT**	
22	N59000	Control Rod - 9 Run ICT - 2016 to Present	1
	N59001	**Control Rod - 10 Run ICT - 2016 to Present**	
	N59005	Control Rod - 9 Run ICT - 2015 and older	1
	N59006	Control Rod - 10 Run ICT - 2015 and older	
23	N50273	Single Shoot Collector Assembly - 9 Run ICT	1
	N53478	**Single Shoot Collector Assembly - 10 Run ICT**	
24	N50274	False Bottom Assembly - 9 Run ICT	1
	N53099	**False Bottom Assembly - 10 Run ICT - Tow Behind**	
25	N50275	Single Shoot SS Collector Weldment - 9 Run ICT	1
	N53075	**Single Shoot SS Collector Weldment - 10 Run ICT**	
26	N50320	Bracket	2
27	N51440	Cleanout Door Link	2
28	N51441	Pin- Cleanout Door Link	2
29	N51444	Mount-Rightside Cleanout Door	1
30	N53014	Spiral Spring Pin - 3/8 x 1 Lg	2
31	N53092	Crank - Lower Cleanout Door - 9 Run ICT	1
	N53095	**Crank - Lower Cleanout Door - 10 Run ICT**	
32	N53098	Mount- Leftside Cleanout Door	1
33	N53302	Lower Cleanout Door SS - 9 Run ICT	1
	N53078	**Lower Cleanout Door SS - 10 Run ICT**	
34	N37190	Seal Strip - 1/4 x 1-3/8 (Bulk/ft x 78") - Ref N53528	2
35	N15716	Seal Strip - 1/4 x 1 (Bulk/ft x 20") - Ref N53530	2
36	S-748	Hex Jam Nut - 3/8	1
37	S-1198	Washer - 5/16 ID x 3/4 OD x .065	18
38	S33598	Hairpin - #10	1
39	W-469	Hex Head - 1/4 x 3/4 Lg	4
40	W-512	Hex Nut - 1/4	6
41	W-514	Hex Nut - 3/8	4
42	W-521	Lockwasher - 1/4	4
43	W-538	Washer - 7/16 ID x 1 OD x 14 Ga	1
44	W-1552	Hex Bolt - 1/4 x 1 Lg	24

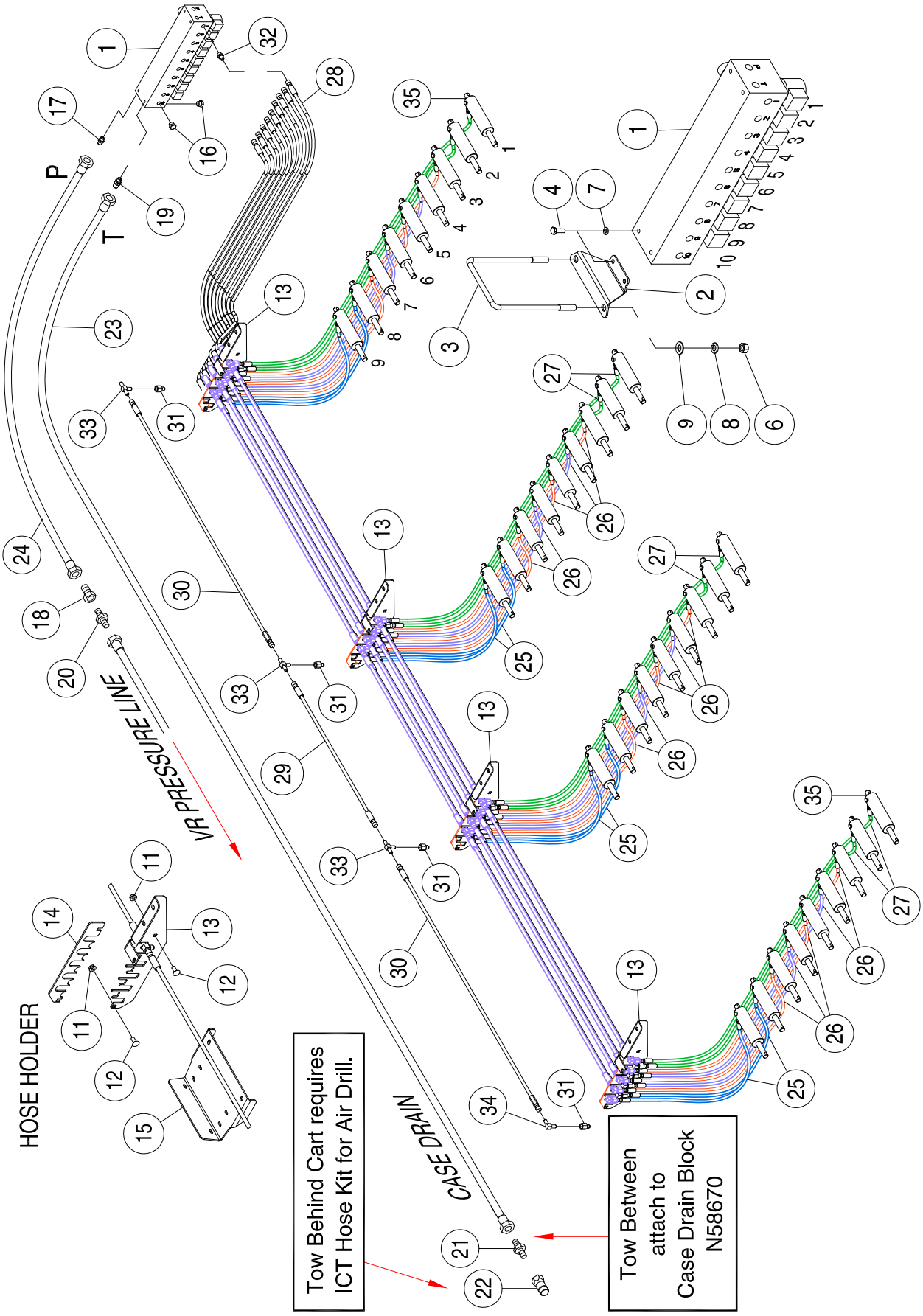
P
T
VR PRESSURE LINE
CASE DRAIN
HOSE HOLDER
Tow Behind Cart requires ICT Hose Kit for Air Drill.
Tow Between attach to Case Drain Block N58670

ICT Hydraulics - 9535, 9650, 9800 and 91000 - 2022

Item	Part No.	Description	Qty
		Quantities Based on 1 Run	
1	N58320	Control Valve - 10 Run	1
2	N48748	Mount Plate	2
3	N36019	U-Bolt - 3/8 x 4 x 10 15/16 Lg - 9365, 9450 and 9535	2
	N19723	U-Bolt - 3/8 x 4 x 6 15/16 Lg - 9445, 9550 and 9650	2
	N25457	U-Bolt - 3/8 x 4 x 8 15/16 Lg - 9555, 9650, 9800 and 91000	2
4	D-5247	Bolt - 5/16 x 1/2 Lg	4
5	W-512	Hex Nut - 1/4	4
6	W-514	Hex Nut - 3/8	4
7	W-522	Lockwasher - .5/16	4
8	W-523	Lockwasher - 3/8	4
9	D-5489	Washer - 13/32 ID x 13/16 OD	4
10	S-1198	Washer - 5/16 ID x 3/4 OD	4
11	D-5278	Lock Nut - 5/16	8
12	D-5259	Carriage Bolt - 5/16 x 3/4 Lg	8
13	N58884	Hose Bracket - Bottom	4
14	N59029	Hose Bracket - Top	4
15	N56209	Hose Holder	4
16	N29365	Plug - 9/16-18 (#06) FORB - per run not used	1
17	N29358	Connector - 9/16-18 (#06) MJIC x 9/16 (#06) MORB	1
18	F10384	Connector - 9/16-18 (#06) MJIC x 7/8-14 (#10) FJIC	1
19	N34047	Connector - 7/8-14 (#10) MJIC x 9/16-18 (#06) MORB	1
20	C-4469	Connector - 7/8-14 (#10) MJIC	1
21	N34620	Connector - 7/8-14 MORB x 7/8-14 FJIC Swivel - Tow Behind**	1
	C14840	Connector - 7/8-14 (#10) MJIC x 3/4-16 (#08) MORB - Tow Between***	1
22	N34498	1/2 Male Pioneer Tip - 7/8-14 (#10) FORB - Tow Behind**	1
23	S39537	Hyd Hose - 1/2 x 372 Lg - 7/8-14 FJIC- 9365, 9450 and 9535 Tow Behind**	1
	N55164	Hyd Hose - 1/2 x 568 Lg - 7/8-14 FJIC - 9445, 9550, 9650 Tow Behind**	1
	N55164	Hyd Hose - 1/2 x 568 Lg - 7/8-14 FJIC - 9555, 9680, 9800 and 91000 Tow Behind**	1
	S39539	Hyd Hose - 1/2 x 330 Lg - 7/8-14 FJIC - 9365, and 9450 Tow Between***	1
	S39539	Hyd Hose - 1/2 x 330 Lg - 7/8-14 FJIC - 9445, 9550 and 9650 Tow Between***	1
	N60311	Hyd Hose - 1/2 x 340 Lg - 7/8-14 FJIC - 9555, 9680 and 9800 Tow Between***	1
24	N49110	Hydraulic Hose - 3/8 x 90 Lg - 9/16-18 FJIC	1
		Quantities Based on 1 Run	
25	N53697	Hyd Hose - 3/16 x 24 Lg - 7/16-20 FJIC - Runs 8, 9 and 10	4
26	N53698	Hyd Hose - 3/16 x 48 Lg - 7/16-20 FJIC - Runs 3, 4, 5, 6 and 7	4
27	N53699	Hyd Hose - 3/16 x 60 Lg - 7/16-20 FJIC - Runs 1 and 2	4
28	S42969	Hyd Hose - 3/8 x 36 Lg - 9/16-18 FJIC - 9535, 9650, 9800 and 91000	1
29	S42967	Hyd Hose - 3/8 x 30 Lg - 9/16-18 FJIC - 9535	1
	S42969	Hyd Hose - 3/8 x 36 Lg - 9/16-18 FJIC - 9650, 9800 and 91000	1
30	S44353	Hyd Hose - 3/8 x 48 Lg - 9/16-18 FJIC- 9535	2
	S47799	Hyd Hose - 3/8 x 60 Lg - 9/16-18 FJIC - 9650, 9800 and 91000	2
31	N50324	Connector - 9/16-18 (#06) FJIC x 7/16-20 (#04) MJIC	4
32	N29358	Connector - 9/16-18 (#06) MJIC x 9/16 (#06) MORB	1
33	C-4393	Tee - 9/16-18 (#06) MJIC	3
34	F-3867	90 Deg Elbow - 9/16-18 (#06) MJIC	1
35	N71837	Cylinder ICT - 1 x 1 Stroke - (Seal Kit N71849)	4
	N58343	Tag - Hose ID - ICT - CASE DRAIN (Not Shown)	
**		**Tow Behind Cart requires an ICT Hose Kit for across the Air Drill.**	
	N54294	Kit: Normal Hyd Hose ICT Ext. For: All Other Models **(Whole Goods Only)**	
	N54295	Kit: 5 Frame Hyd Hose ICT Ext. For: Quantum, 5 Frame C2 & 5 Frame RAZR **(Whole Goods Only)**	
***		**Tow Between Cart attach the Case Drain line to the Case Drain Block N58670**	

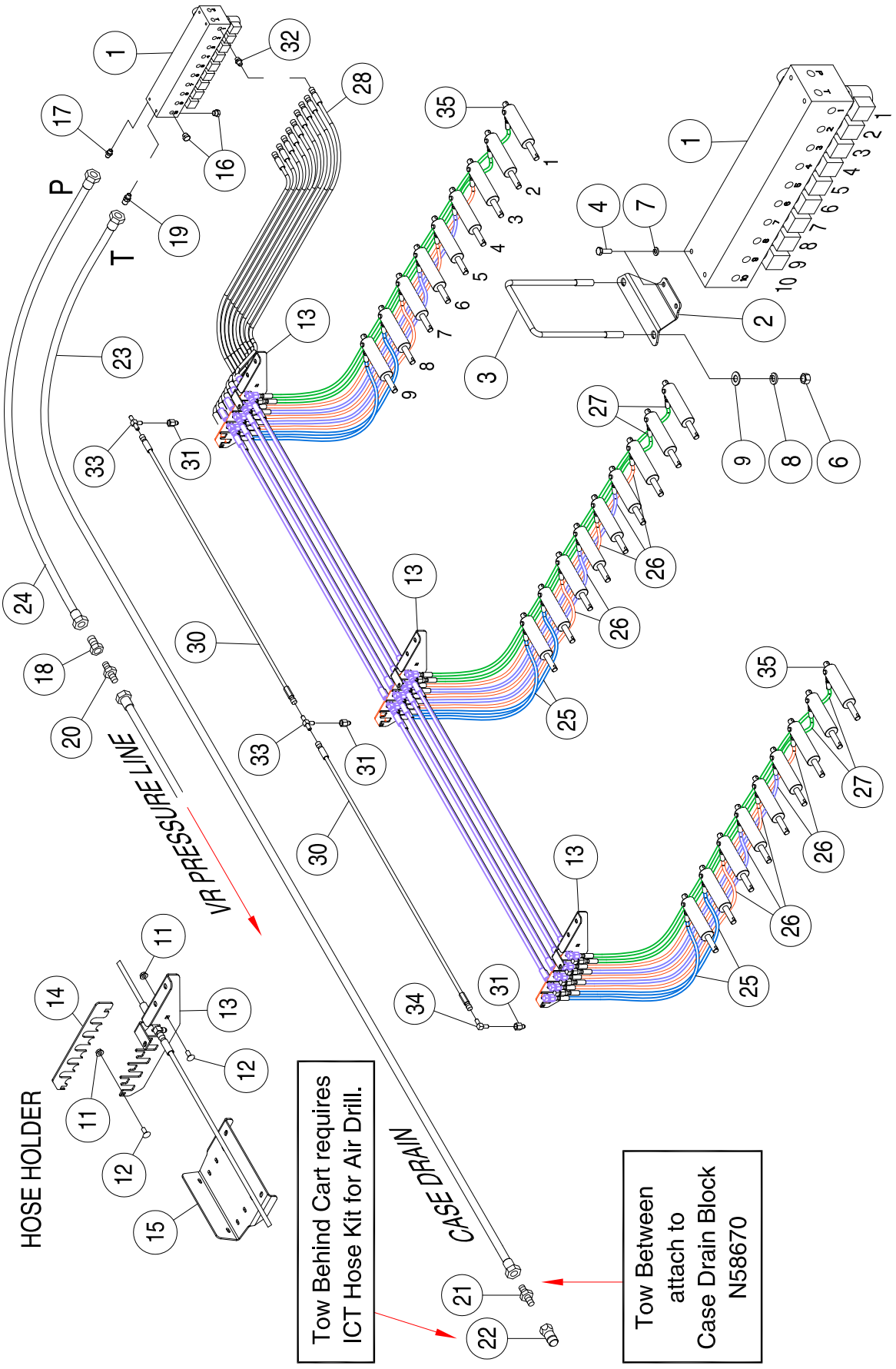
P
T
VR PRESSURE LINE
CASE DRAIN
HOSE HOLDER
Tow Behind Cart requires ICT Hose Kit for Air Drill.
Tow Between attach to Case Drain Block N58670

ICT Hydraulics - 9450, 9550 and 9680 - 2022

Item	Part No.	Description	Qty
		Quantities Based on 1 Run	
1	N58320	Control Valve - 10 Run	1
2	N48748	Mount Plate	2
3	N36019	U-Bolt - 3/8 x 4 x 10 15/16 Lg - 9365, 9450 and 9535	2
	N19723	U-Bolt - 3/8 x 4 x 6 15/16 Lg - 9445, 9550 and 9650	2
	N25457	U-Bolt - 3/8 x 4 x 8 15/16 Lg - 9555, 9650, 9800 and 91000	2
4	D-5247	Bolt - 5/16 x 1/2 Lg	4
5	W-512	Hex Nut - 1/4	4
6	W-514	Hex Nut - 3/8	4
7	W-522	Lockwasher - .5/16	4
8	W-523	Lockwasher - 3/8	4
9	D-5489	Washer - 13/32 ID x 13/16 OD	4
10	S-1198	Washer - 5/16 ID x 3/4 OD	4
11	D-5278	Lock Nut - 5/16	8
12	D-5259	Carriage Bolt - 5/16 x 3/4 Lg	8
13	N58884	Hose Bracket - Bottom	4
14	N59029	Hose Bracket - Top	4
15	N56209	Hose Holder	4
16	N29365	Plug - 9/16-18 (#06) FORB - per run not used	1
17	N29358	Connector - 9/16-18 (#06) MJIC x 9/16 (#06) MORB	1
18	F10384	Connector - 9/16-18 (#06) MJIC x 7/8-14 (#10) FJIC	1
19	N34047	Connector - 7/8-14 (#10) MJIC x 9/16-18 (#06) MORB	1
20	C-4469	Connector - 7/8-14 (#10) MJIC	1
21	N34620	Connector - 7/8-14 MORB x 7/8-14 FJIC Swivel - Tow Behind**	1
	C14840	Connector - 7/8-14 (#10) MJIC x 3/4-16 (#08) MORB - Tow Between***	1
22	N34498	1/2 Male Pioneer Tip - 7/8-14 (#10) FORB - Tow Behind**	1
23	S39537	Hyd Hose - 1/2 x 372 Lg - 7/8-14 FJIC- 9365, 9450 and 9535 Tow Behind**	1
	N55164	Hyd Hose - 1/2 x 568 Lg - 7/8-14 FJIC - 9445, 9550, 9650 Tow Behind**	1
	N55164	Hyd Hose - 1/2 x 568 Lg - 7/8-14 FJIC - 9555, 9680, 9800 and 91000 Tow Behind**	1
	S39539	Hyd Hose - 1/2 x 330 Lg - 7/8-14 FJIC - 9365, and 9450 Tow Between***	1
	S39539	Hyd Hose - 1/2 x 330 Lg - 7/8-14 FJIC - 9445, 9550 and 9650 Tow Between***	1
	N60311	Hyd Hose - 1/2 x 340 Lg - 7/8-14 FJIC - 9555, 9680 and 9800 Tow Between***	1
24	N49110	Hydraulic Hose - 3/8 x 90 Lg - 9/16-18 FJIC	1
		Quantities Based on 1 Run	
25	N53697	Hyd Hose - 3/16 x 24 Lg - 7/16-20 FJIC - Runs 8, 9 and 10	3
26	N53698	Hyd Hose - 3/16 x 48 Lg - 7/16-20 FJIC - Runs 3, 4, 5, 6 and 7	3
27	N53699	Hyd Hose - 3/16 x 60 Lg - 7/16-20 FJIC - Runs 1 and 2	3
28	S42969	Hyd Hose - 3/8 x 36 Lg - 9/16-18 FJIC - 9535, 9650, 9800 and 91000	1
29	* * * * *		
30	S44353	Hyd Hose - 3/8 x 48 Lg - 9/16-18 FJIC- 9535	2
	S47799	Hyd Hose - 3/8 x 60 Lg - 9/16-18 FJIC - 9650, 9800 and 91000	2
31	N50324	Connector - 9/16-18 (#06) FJIC x 7/16-20 (#04) MJIC	3
32	N29358	Connector - 9/16-18 (#06) MJIC x 9/16 (#06) MORB	1
33	C-4393	Tee - 9/16-18 (#06) MJIC	2
34	F-3867	90 Deg Elbow - 9/16-18 (#06) MJIC	1
35	N71837	Cylinder ICT - 1 x 1 Stroke - (Seal Kit N71849)	3
	N58343	Tag - Hose ID - ICT - CASE DRAIN (Not Shown)	
**		**Tow Behind Cart requires an ICT Hose Kit for across the Air Drill.**	
	N54294	Kit: Normal Hyd Hose ICT Ext. For: All Other Models **(Whole Goods Only)**	
	N54295	Kit: 5 Frame Hyd Hose ICT Ext. For: Quantum, 5 Frame C2 & 5 Frame RAZR **(Whole Goods Only)**	
***		**Tow Between Cart attach the Case Drain line to the Case Drain Block N58670**	

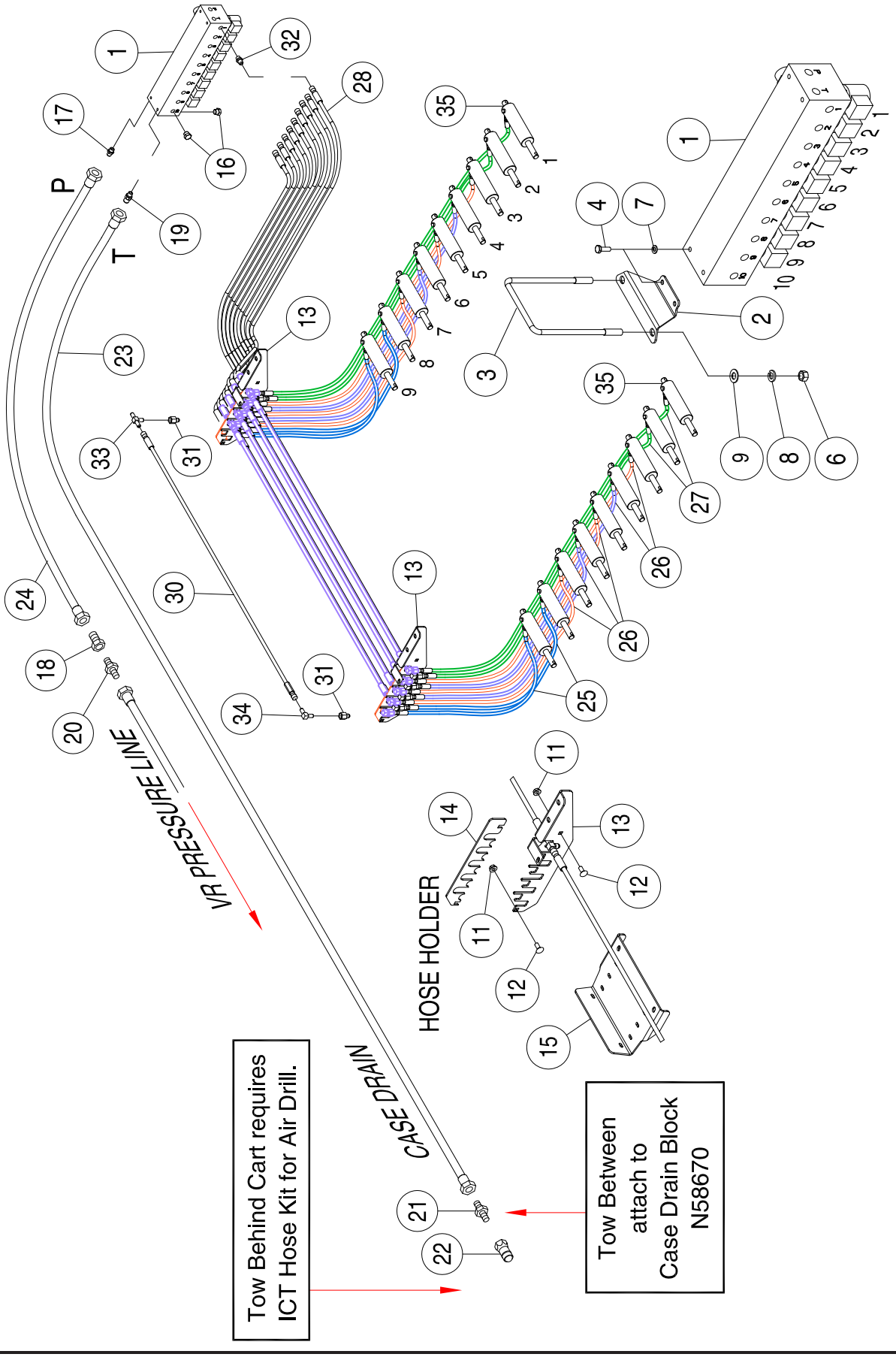
P
T
VR PRESSURE LINE
CASE DRAIN
HOSE HOLDER
Tow Behind Cart requires ICT Hose Kit for Air Drill.
Tow Between attach to Case Drain Block N58670

ICT Hydraulics - 9365, 9445 and 9555 - 2022

Item	Part No.	Description	Qty
		Quantities Based on 1 Run	
1	N58320	Control Valve - 10 Run	1
2	N48748	Mount Plate	2
3	N36019	U-Bolt - 3/8 x 4 x 10 15/16 Lg - 9365, 9450 and 9535	2
	N19723	U-Bolt - 3/8 x 4 x 6 15/16 Lg - 9445, 9550 and 9650	2
	N25457	U-Bolt - 3/8 x 4 x 8 15/16 Lg - 9555, 9650, 9800 and 91000	2
4	D-5247	Bolt - 5/16 x 1/2 Lg	4
5	W-512	Hex Nut - 1/4	4
6	W-514	Hex Nut - 3/8	4
7	W-522	Lockwasher - .5/16	4
8	W-523	Lockwasher - 3/8	4
9	D-5489	Washer - 13/32 ID x 13/16 OD	4
10	S-1198	Washer - 5/16 ID x 3/4 OD	4
11	D-5278	Lock Nut - 5/16	8
12	D-5259	Carriage Bolt - 5/16 x 3/4 Lg	8
13	N58884	Hose Bracket - Bottom	4
14	N59029	Hose Bracket - Top	4
15	N56209	Hose Holder	4
16	N29365	Plug - 9/16-18 (#06) FORB - per run not used	1
17	N29358	Connector - 9/16-18 (#06) MJIC x 9/16 (#06) MORB	1
18	F10384	Connector - 9/16-18 (#06) MJIC x 7/8-14 (#10) FJIC	1
19	N34047	Connector - 7/8-14 (#10) MJIC x 9/16-18 (#06) MORB	1
20	C-4469	Connector - 7/8-14 (#10) MJIC	1
21	N34620	Connector - 7/8-14 MORB x 7/8-14 FJIC Swivel - Tow Behind**	1
	C14840	Connector - 7/8-14 (#10) MJIC x 3/4-16 (#08) MORB - Tow Between***	1
22	N34498	1/2 Male Pioneer Tip - 7/8-14 (#10) FORB - Tow Behind**	1
23	S39537	Hyd Hose - 1/2 x 372 Lg - 7/8-14 FJIC- 9365, 9450 and 9535 Tow Behind**	1
	N55164	Hyd Hose - 1/2 x 568 Lg - 7/8-14 FJIC - 9445, 9550, 9650 Tow Behind**	1
	N55164	Hyd Hose - 1/2 x 568 Lg - 7/8-14 FJIC - 9555, 9680, 9800 and 91000 Tow Behind**	1
	S39539	Hyd Hose - 1/2 x 330 Lg - 7/8-14 FJIC - 9365, and 9450 Tow Between***	1
	S39539	Hyd Hose - 1/2 x 330 Lg - 7/8-14 FJIC - 9445, 9550 and 9650 Tow Between***	1
	N60311	Hyd Hose - 1/2 x 340 Lg - 7/8-14 FJIC - 9555, 9680 and 9800 Tow Between***	1
24	N49110	Hydraulic Hose - 3/8 x 90 Lg - 9/16-18 FJIC	1
		Quantities Based on 1 Run	
25	N53697	Hyd Hose - 3/16 x 24 Lg - 7/16-20 FJIC - Runs 8, 9 and 10	2
26	N53698	Hyd Hose - 3/16 x 48 Lg - 7/16-20 FJIC - Runs 3, 4, 5, 6 and 7	2
27	N53699	Hyd Hose - 3/16 x 60 Lg - 7/16-20 FJIC - Runs 1 and 2	2
28	S42969	Hyd Hose - 3/8 x 36 Lg - 9/16-18 FJIC - 9535, 9650, 9800 and 91000	1
29	* * * * *		
30	S44353	Hyd Hose - 3/8 x 48 Lg - 9/16-18 FJIC- 9535	1
	S47799	Hyd Hose - 3/8 x 60 Lg - 9/16-18 FJIC - 9650, 9800 and 91000	1
31	N50324	Connector - 9/16-18 (#06) FJIC x 7/16-20 (#04) MJIC	2
32	N29358	Connector - 9/16-18 (#06) MJIC x 9/16 (#06) MORB	1
33	C-4393	Tee - 9/16-18 (#06) MJIC	1
34	F-3867	90 Deg Elbow - 9/16-18 (#06) MJIC	1
35	N71837	Cylinder ICT - 1 x 1 Stroke - (Seal Kit N71849)	2
	N58343	Tag - Hose ID - ICT - CASE DRAIN (Not Shown)	
**		**Tow Behind Cart requires an ICT Hose Kit for across the Air Drill.**	
	N54294	Kit: Normal Hyd Hose ICT Ext. For: All Other Models **(Whole Goods Only)**	
	N54295	Kit: 5 Frame Hyd Hose ICT Ext. For: Quantum, 5 Frame C2 & 5 Frame RAZR **(Whole Goods Only)**	
***		**Tow Between Cart attach the Case Drain line to the Case Drain Block N58670**	

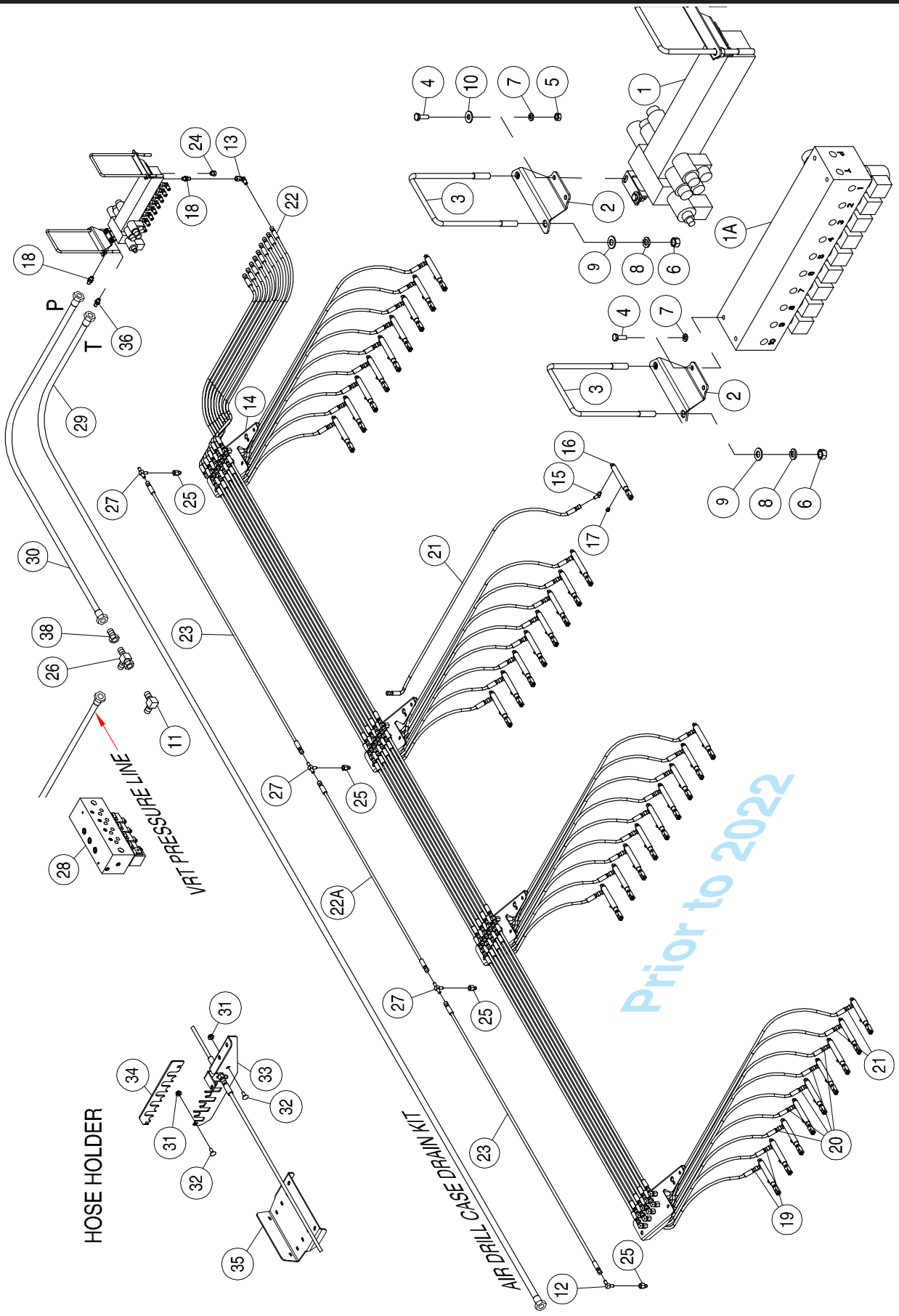
HOSE HOLDER
VRT PRESSURE LINE
AIR DRILL CASE DRAIN KIT
P
T
Prior to 2022

ICT Hydraulics - 9535, 9650, 9800 and 91000 - Prior to 2022

Item	Part No.	Description	Qty
		Quantities Based on 1 Run	
1	N48750	ICT Control Valve - Prior to 2016	1
1A	N58320	Control Valve - 10 Run	1
2	N48748	Mount Plate	2
3	N36019	U-Bolt - 3/8 x 4 x 10 15/16 Lg - 9365, 9450 and 9535	2
	N19723	U-Bolt - 3/8 x 4 x 6 15/16 Lg - 9445, 9550 and 9650	2
	N25457	U-Bolt - 3/8 x 4 x 8 15/16 Lg - 9555, 9650, 9800 and 91000	2
4	D-5247	Bolt - 5/16 x 1/2 Lg	4
5	W-512	Hex Nut - 1/4	4
6	W-514	Hex Nut - 3/8	4
7	W-522	Lockwasher - 5/16	4
8	W-523	Lockwasher - 3/8	4
9	D-5489	Washer - 13/32 ID x 13/16 OD	4
10	S-1198	Washer - 5/16 ID x 3/4 OD	4
11	C15318	90 Deg Elbow - 7/8-14 MJIC x 7/8-14 MORB	1
12	F-3867	90 Deg Elbow - 9/16-18 MJIC	1
13	S29967	90 Deg Elbow - 9/16-18 MJIC x 9/16-18 FJIC Swivel	1
14	N53466	Hose Holder - Prior to 2016	4
15	N50325	45 Deg Elbow - 7/16-20 x 1/8 NPT Fitting	4
16	N49389	Brass Cylinder - 1/2 x 1 Stroke	4
	N62086	**Seal Kit for N49389 Brass Cylinder**	
	N62087	**Brass Assembly Tool Kit - required to install Seals**	
17	N53331	Breather Vent - 1/8 Male NPT	4
18	N29358	Connector - 9/16-18 MJIC x 9/16 MORB	3
19	N53697	Hyd Hose - 3/16 x 24 Lg - 7/16-20 FJIC	1
20	N53698	Hyd Hose - 3/16 x 48 Lg - 7/16 FJIC	4
21	N53699	Hyd Hose - 3/16 x 60 Lg - 7/16-20 FJIC	1
22	S42969	Hyd Hose - 3/8 x 36 Lg - 9/16-18 FJIC - 9535, 9650, 9800 and 91000	1
22A	S42967	Hyd Hose - 3/8 x 30 Lg w/ #6 9/16-18 FJIC - 9535	1
	S42969	Hyd Hose - 3/8 x 36 Lg - 9/16-18 FJIC - 9650, 9800 and 91000	1
23	S44353	Hyd Hose - 3/8 x 48 Lg w/ #6 9/16-18 FJIC- 9535	2
	S47799	Hyd Hose - 3/8 x 60 Lg - 9/16-18 FJIC - 9650, 9800 and 91000	2
24	N29365	Connector - 9/16-18 FORB	1
25	N50324	Connector - 9/16-18 FJIC x 7/16-20 MJIC	4
26	H18746	Tee - (2) 7/8-14 MJIC x (1) 7/8-14 FJIC Swivel	1
27	C-4393	Tee - 9/16-18 MJIC	3
28	N45195	VRT Vavle Manifold Assembly	1
29	S39537	Hyd Hose - 1/2 x 372 Lg w/ (#10) 7/8-14 FJIC- 9365, 9450 and 9535 Tow Behind	1
	N55164	Hyd Hose - 1/2 x 568 Lg - 7/8-14 FJIC - 9445, 9550, 9650 Tow Behind	1
	N55164	Hyd Hose - 1/2 x 568 Lg - 7/8-14 FJIC - 9555, 9680, 9800 and 91000 Tow Behind	1
	S39539	Hyd Hose - 1/2 x 330 Lg w/7/8-14 FJIC - 9365, and 9450 Tow Between	1
	S39539	Hyd Hose - 1/2 x 330 Lg w/7/8-14 FJIC - 9445, 9550 and 9650 Tow Between	1
	N60311	Hyd Hose - 1/2 x 340 Lg w/(#10) 7/8-14 FJIC - 9555, 9680 and 9800 Tow Between	1
30	N49110	Hydraulic Hose - 3/8 x 90 Lg - 9/16-18 FJIC	1
31	D-5278	Lock Nut - 5/16	8
32	D-5259	Carriage Bolt - 5/16 x 3/4 Lg	8
33	N58884	Hose Bracket - Bottom	4
34	N59029	Hose Bracket - Top	4
35	N56209	Hose Holder	4
36	N34047	Connector - 7/8-14 MJIC x 9/16-18 ORB	1
37	N58320	Control Valve - 10 Run	1
38	F10384	Connector - 9/16-18 (#06) MJIC x 7/8-14 FJIC	1
	N58343	Tag - Hose ID - ICT - CASE DRAIN (Not Shown)	

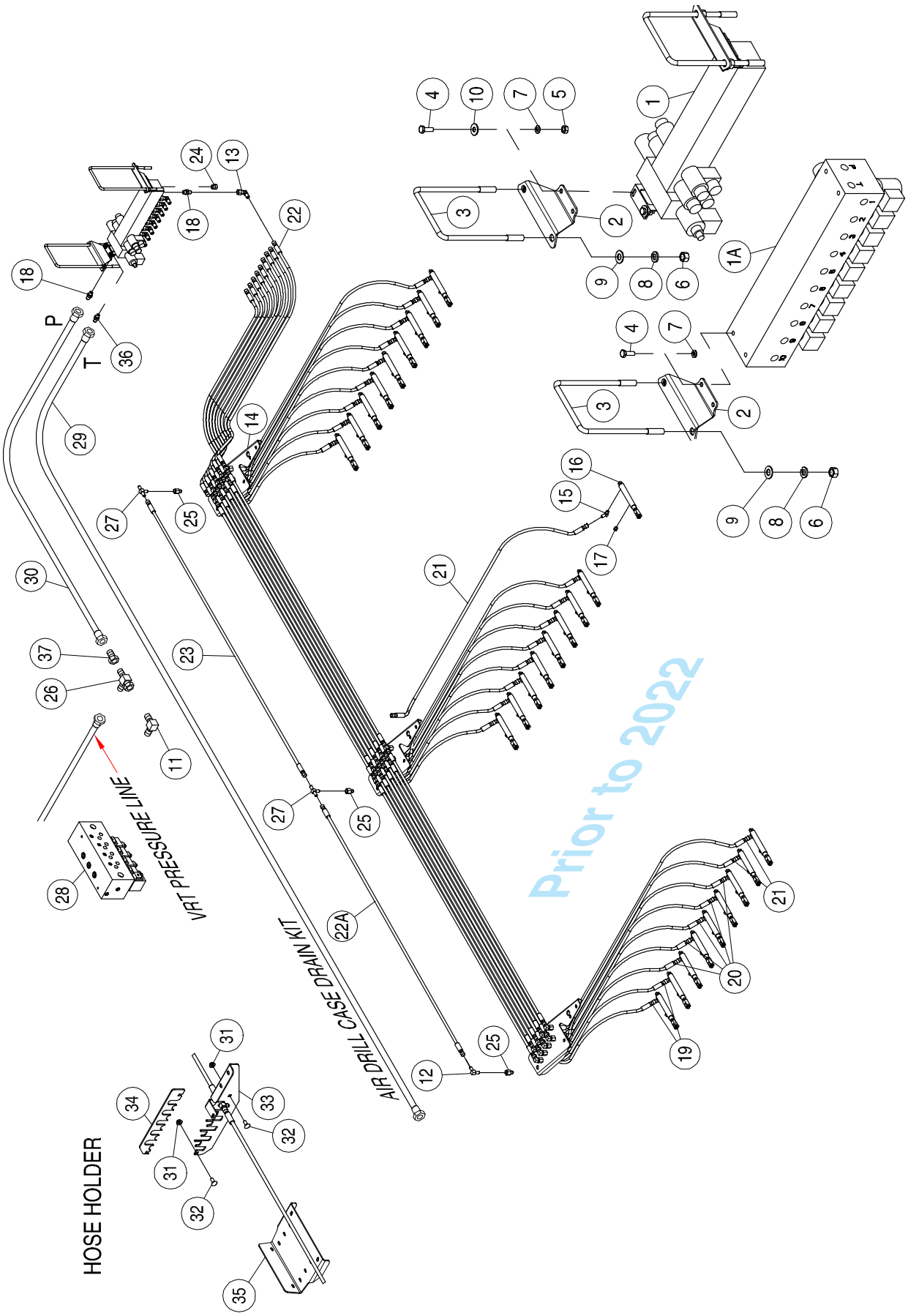
P
T
VRT PRESSURE LINE
AIR DRILL CASE DRAIN KIT
HOSE HOLDER
Prior to 2022

ICT Hydraulics - 9450, 9550 and 9680 - Prior to 2022

Item	Part No.	Description	Qty
		Quantities Based on 1 Run	
1	N48750	ICT Control Valve - Prior to 2016	1
1A	N58320	Control Valve - 10 Run	1
2	N48748	Mount Plate	2
3	N36019	U-Bolt - 3/8 x 4 x 10 15/16 Lg - 9365, 9450 and 9535	2
	N19723	U-Bolt - 3/8 x 4 x 6 15/16 Lg - 9445, 9550 and 9650	2
	N25457	U-Bolt - 3/8 x 4 x 8 15/16 Lg - 9555, 9650, 9800 and 91000	2
4	D-5247	Bolt - 5/16 x 1/2 Lg	4
5	W-512	Hex Nut - 1/4	4
6	W-514	Hex Nut - 3/8	4
7	W-522	Lockwasher - 5/16	4
8	W-523	Lockwasher - 3/8	4
9	D-5489	Washer - 13/32 ID x 13/16 OD	4
10	S-1198	Washer - 5/16 ID x 3/4 OD	4
11	C15318	90 Deg Elbow - 7/8-14 MJIC x 7/8-14 MORB	1
12	F-3867	90 Deg Elbow - 9/16-18 MJIC	1
13	S29967	90 Deg Elbow - 9/16-18 MJIC x 9/16-18 FJIC Swivel	1
14	N53466	Hose Holder - Prior to 2016	3
15	N50325	45 Deg Elbow - 7/16-20 x 1/8 NPT Fitting	4
16	N49389	Brass Cylinder - 1/2 x 1 Stroke	4
	N62086	**Seal Kit for N49389 Brass Cylinder**	
	N62087	**Brass Assembly Tool Kit - required to install Seals**	
17	N53331	Breather Vent - 1/8 Male NPT	4
18	N29358	Connector - 9/16-18 MJIC x 9/16 MORB	3
19	N53697	Hydraulic Hose - 3/16 x 24 Lg - 7/16-20 FJIC	1
20	N53698	Hydraulic Hose - 3/16 x 48 Lg - 7/16 FJIC	4
21	N53699	Hydraulic Hose - 3/16 x 60 Lg - 7/16-20 FJIC	1
22	S42969	Hydraulic Hose - 3/8 x 36 Lg - 9/16-18 FJIC - 9450, 9550 and 9680	2
22A	S44353	Hyd Hose - 3/8 x 48 Lg w/ #6 9/16-18 FJIC - 9450	1
	S47799	Hydraulic Hose - 3/8 x 60 Lg - 9/16-18 FJIC - 9550 and 9680	1
23	S44353	Hyd Hose - 3/8 x 48 Lg w/ #6 9/16-18 FJIC - 9450	1
	S47799	Hydraulic Hose - 3/8 x 60 Lg - 9/16-18 FJIC - 9550 and 9680	1
24	N29365	Connector - 9/16-18 FORB	1
25	N50324	Connector - 9/16-18 FJIC x 7/16-20 MJIC	4
26	H18746	Tee - (2) 7/8-14 MJIC x (1) 7/8-14 FJIC Swivel	1
27	C-4393	Tee - 9/16-18 MJIC	2
28	N45195	VRT Vavle Manifold Assembly	1
29	S39537	Hyd Hose - 1/2 x 372 Lg w/ (#10) 7/8-14 FJIC- 9365, 9450 and 9535 Tow Behind	1
	N55164	Hyd Hose - 1/2 x 568 Lg - 7/8-14 FJIC - 9445, 9550, 9650 Tow Behind	1
	N55164	Hyd Hose - 1/2 x 568 Lg - 7/8-14 FJIC - 9555, 9680, 9800 and 91000 Tow Behind	1
	S39539	Hyd Hose - 1/2 x 330 Lg w/7/8-14 FJIC - 9365, and 9450 Tow Between	1
	S39539	Hyd Hose - 1/2 x 330 Lg w/7/8-14 FJIC - 9445, 9550 and 9650 Tow Between	1
	N60311	Hyd Hose - 1/2 x 340 Lg w/(#10) 7/8-14 FJIC - 9555, 9680 and 9800 Tow Between	1
30	N49110	Hydraulic Hose - 3/8 x 90 Lg - 9/16-18 FJIC	1
31	D-5278	Lock Nut - 5/16	6
32	D-5259	Carriage Bolt - 5/16 x 3/4 Lg	6
33	N58884	Hose Bracket - Bottom	3
34	N59029	Hose Bracket - Top	3
35	N56209	Hose Holder	3
36	N34047	Connector - 7/8-14 MJIC x 9/16-18 ORB	1
37	F10384	Connector - 9/16-18 (#06) MJIC x 7/8-14 FJIC	1
	N58343	Tag - Hose ID - ICT - CASE DRAIN (Not Shown)	

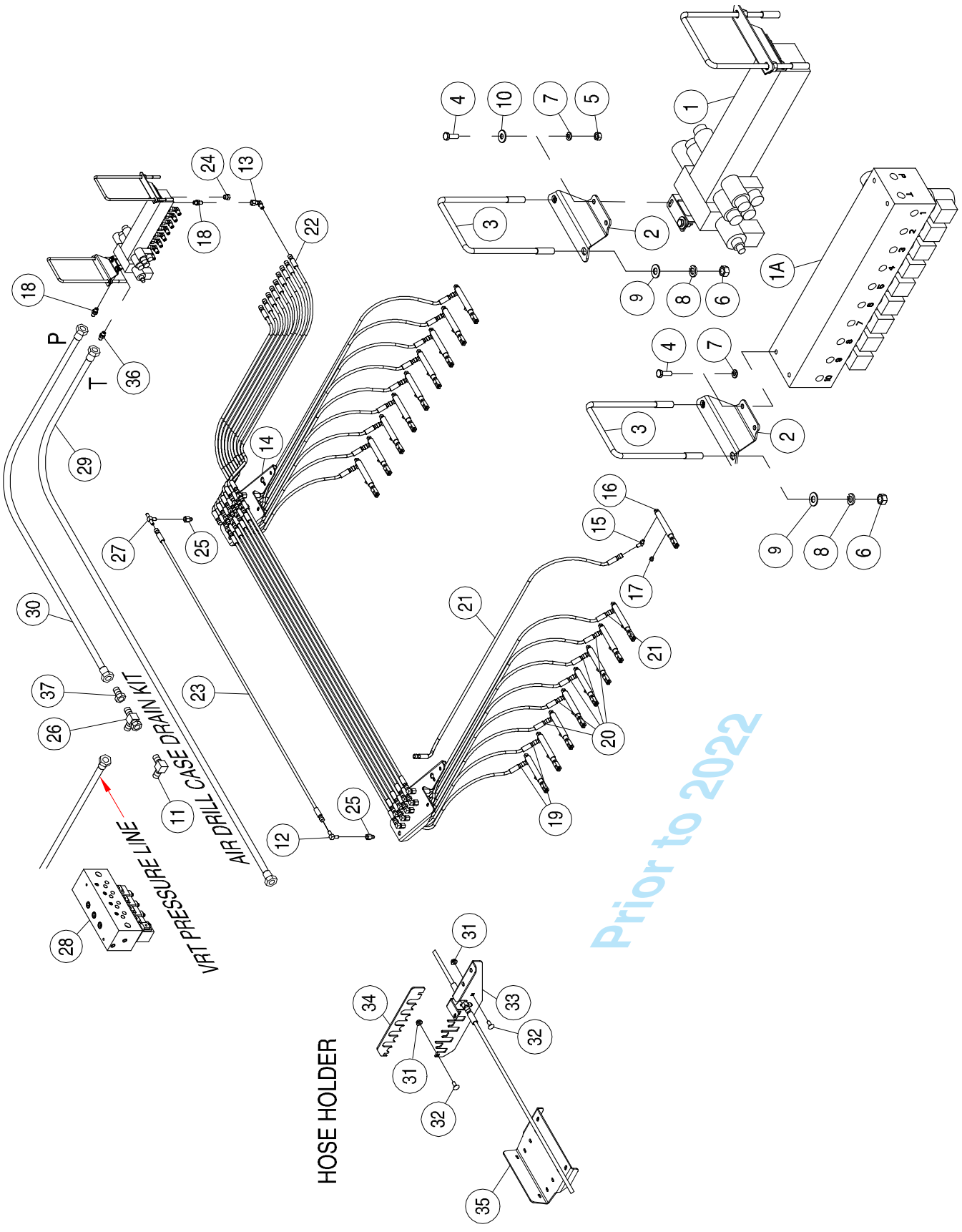
P
T
VRT PRESSURE LINE
AIR DRILL CASE DRAIN KIT
HOSE HOLDER
Prior to 2022

ICT Hydraulics - 9365, 9445 and 9555 - Prior to 2022

Item	Part No.	Description	Qty
		Quantities Based on 1 Run	
1	N48750	ICT Control Valve - Prior to 2016	1
1A	N58320	Control Valve - 10 Run	1
2	N48748	Mount Plate	2
3	N36019	U-Bolt - 3/8 x 4 x 10 15/16 Lg - 9365, 9450 and 9535	2
	N19723	U-Bolt - 3/8 x 4 x 6 15/16 Lg - 9445, 9550 and 9650	2
	N25457	U-Bolt - 3/8 x 4 x 8 15/16 Lg - 9555, 9650, 9800 and 91000	2
4	D-5247	Bolt - 5/16 x 1/2 Lg	4
5	W-512	Hex Nut - 1/4	4
6	W-514	Hex Nut - 3/8	4
7	W-522	Lockwasher - 5/16	4
8	W-523	Lockwasher - 3/8	4
9	D-5489	Washer - 13/32 ID x 13/16 OD	4
10	S-1198	Washer - 5/16 ID x 3/4 OD	4
11	C15318	90 Deg Elbow - 7/8-14 MJIC x 7/8-14 MORB	1
12	F-3867	90 Deg Elbow - 9/16-18 MJIC	1
13	S29967	90 Deg Elbow - 9/16-18 MJIC x 9/16-18 FJIC Swivel	1
14	N53466	Hose Holder - Prior to 2016	4
15	N50325	45 Deg Elbow - 7/16-20 x 1/8 NPT Fitting	4
16	N49389	Brass Cylinder - 1/2 x 1 Stroke	4
	N62086	**Seal Kit for N49389 Brass Cylinder**	
	N62087	**Brass Assembly Tool Kit - required to install Seals**	
17	N53331	Breather Vent - 1/8 Male NPT	4
18	N29358	Connector - 9/16-18 MJIC x 9/16 MORB	3
19	N53697	Hydraulic Hose - 3/16 x 24 Lg - 7/16-20 FJIC	1
20	N53698	Hydraulic Hose - 3/16 x 48 Lg - 7/16 FJIC	4
21	N53699	Hydraulic Hose - 3/16 x 60 Lg - 7/16-20 FJIC	1
22	S42969	Hydraulic Hose - 3/8 x 36 Lg - 9/16-18 FJIC	1
23	N53696	Hyd Hose - 3/8 x 66 Lg w/9/16-18 FJIC - 9365	1
	N48126	Hyd Hose - 3/8 x 76 Lg w/9/16-18 FJIC - 9445 and 9555	1
24	N29365	Connector - 9/16-18 FORB	1
25	N50324	Connector - 9/16-18 FJIC x 7/16-20 MJIC	4
26	H18746	Tee - (2) 7/8-14 MJIC x (1) 7/8-14 FJIC Swivel	1
27	C-4393	Tee - 9/16-18 MJIC	1
28	N45195	VRT Vavle Manifold Assembly	1
29	S39537	Hyd Hose - 1/2 x 372 Lg w/ (#10) 7/8-14 FJIC- 9365, 9450 and 9535 Tow Behind	1
	N55164	Hyd Hose - 1/2 x 568 Lg - 7/8-14 FJIC - 9445, 9550, 9650 Tow Behind	1
	N55164	Hyd Hose - 1/2 x 568 Lg - 7/8-14 FJIC - 9555, 9680, 9800 and 91000 Tow Behind	1
	S39539	Hyd Hose - 1/2 x 330 Lg w/7/8-14 FJIC - 9365, and 9450 Tow Between	1
	S39539	Hyd Hose - 1/2 x 330 Lg w/7/8-14 FJIC - 9445, 9550 and 9650 Tow Between	1
	N60311	Hyd Hose - 1/2 x 340 Lg w/(#10) 7/8-14 FJIC - 9555, 9680 and 9800 Tow Between	1
30	N49110	Hydraulic Hose - 3/8 x 90 Lg - 9/16-18 FJIC	1
31	D-5278	Lock Nut - 5/16	4
32	D-5259	Carriage Bolt - 5/16 x 3/4 Lg	4
33	N58884	Hose Bracket - Bottom	2
34	N59029	Hose Bracket - Top	2
35	N56209	Hose Holder	2
36	N34047	Connector - 7/8-14 MJIC x 9/16-18 ORB	1
37	F10384	Connector - 9/16-18 (#06) MJIC x 7/8-14 FJIC	1
	N58343	Tag - Hose ID - ICT - CASE DRAIN (Not Shown)	

ICT Transmissions
Front - 9365, 9450, 9535 (Prior to 2017)

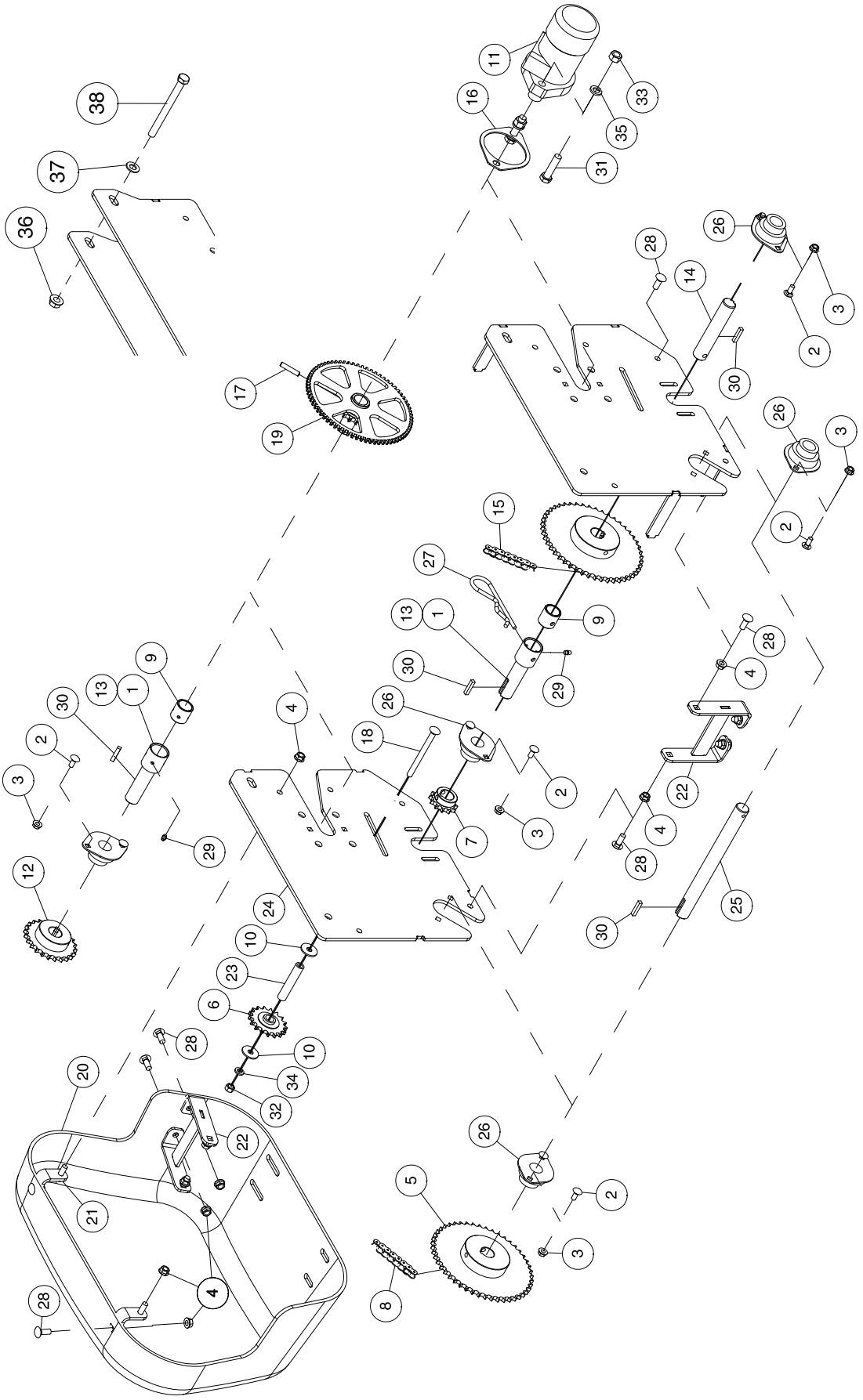

Front ICT Transmissions - 9365, 9450, 9535 (Prior to 2017)

Item	Part No.	Description	Qty
1	N29340	Shaft - VRT Slow Speed - 1 1/2 Dia x 5 Lg (Contains Item 9)	2
2	D-5259	Carriage Bolt - 5/16 x 3/4 Lg	10
3	D-5278	Flange Lock Nut - 5/16	10
4	D-5279	Lock Nut - 3/8 Serrated Flange	12
5	D10747	Sprocket - 40B48	2
6	D17808	Sprocket Idler - 40A17 - W/5/8 Bore	1
7	D17946	Sprocket -40B12	1
8	**S-5777**	**Chain - #40 x 84 Link W/Conn** S10954 - Connector #40 Chain S10955 - Offset Connector #40 Chain (Not Shown)	**1**
9	N16853	Oillite Bushing - 1.003 ID x 1.253 OD x 1-1/4 Lg	2
10	N19706	Washer-13/32 ID x 1-1/4 OD x.100	2
11	N29319	Hydraulic Motor - DANFOSS DH80 - **(See Page 22-44)**	1
12	N29338	Sprocket - 40B24	1
13	* * * * * *		
14	N29341	Shaft-Slow Speed - 1 Dia x 5 3/8 Lg	1
15	**N13967**	**Chain - #40 x 62 Link W/Conn & Off**	**1**
16	N29371	Shim	1
17	N29375	Groove Pin - 5/16 x 1 1/2	1
18	N37219	Carriage Bolt - 3/8 x 4 1/2 Lg	1
19	N45530	Shaft -Slow Speed	1
20	N50190	Transmission Guard	1
21	N50198	Retainer Clip - Upper	2
22	N50780	Cover Bracket	2
23	N50842	Bushing - 5/8 OD x .385 ID x 3 1/4 Lg	1
24	N51246	Transmission Weldment	1
25	N53692	Meter Shaft -1 Dia x 10 13/16 Lg	1
26	N53889	Flangette Bearing - 1" Bore	5
27	P1318510	Hairpin - #19 x 4.375 Lg	1
28	P7C616	Carriage Bolt - 3/8 x 1 Lg	10
29	S-752	Grease Zerk - 1/4" Straight	2
30	S10730	Key - 1/4 x 1/4 x 1 1/4 Lg	4
31	W-488	Hex Bolt - 1/2 x 2 Lg	2
32	W-514	Hex Nut - 3/8	1
33	W-516	Hex Nut - 1/2	2
34	W-523	Lockwasher - 3/8	1
35	W-525	Lockwasher - 1/2	2
36	D14565	Locknut - 1/2 Flange Serrated	2
37	S-1925	Flatwasher - 1/2	2
38	W-496	Hex Bolt - 1/2 x 5 1/2 Lg	2
	N51245	Transmission Assembly - Contains all above items	1

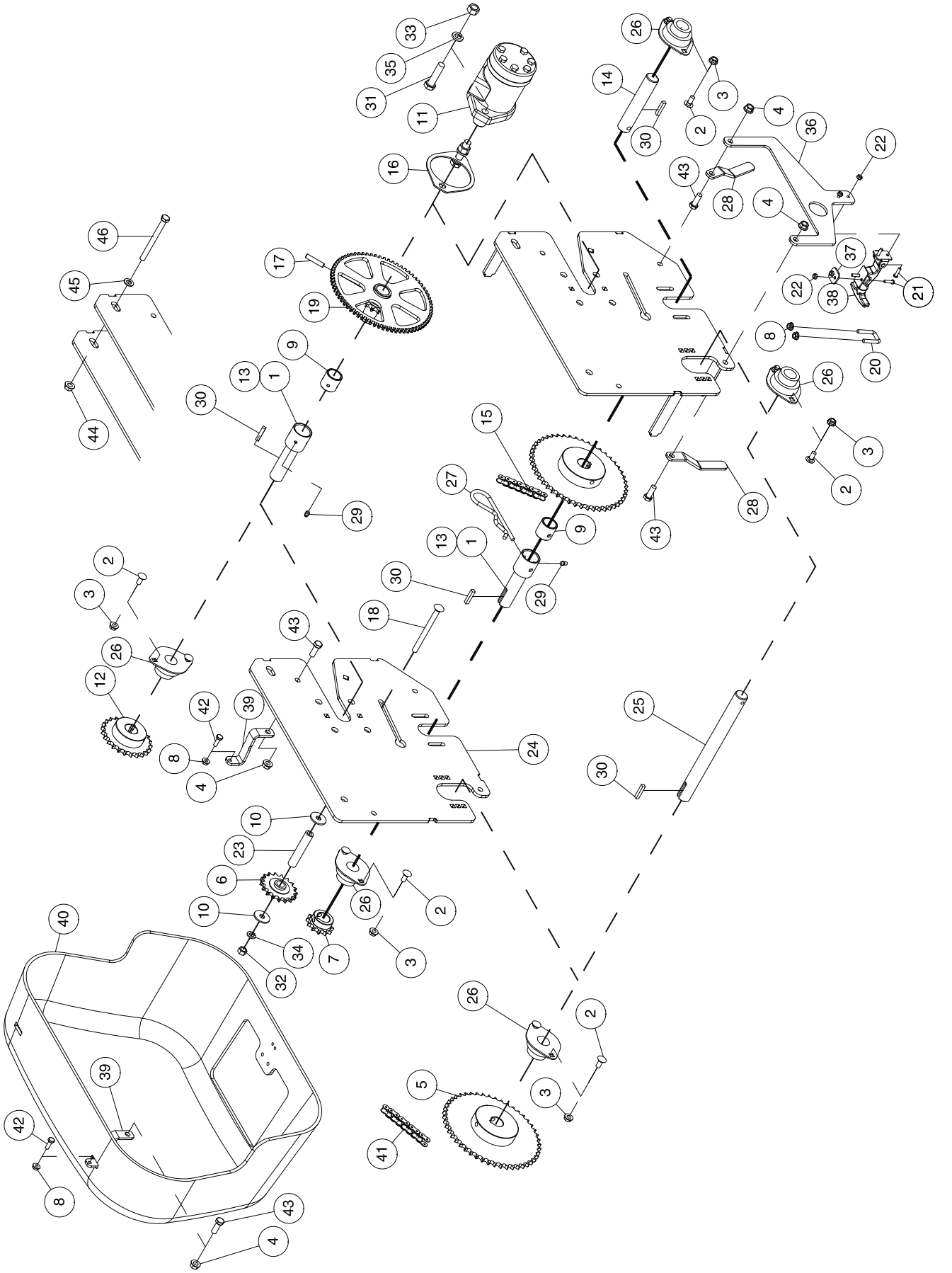
33
35
31
11
16
26
14
30
3
2
4
36
22
43
28
4
37
22
38
21
46
45
44
17
19
9
13
1
30
29
8
20
26
15
27
9
13
1
30
29
43
28
3
2
2
3
26
12
42
39
8
4
43
18
24
25
30
10
23
6
10
34
32
7
26
2
3
40
39
42
8
43
4
26
2
3
5
41

Front ICT Transmissions - 9365, 9450, 9535

Item	Part No.	Description	Qty
1	N29340	Shaft - VRT Slow Speed - 1 1/2 Dia x 5 Lg (Contains Item 9)	2
2	D-5259	Carriage Bolt - 5/16 x 3/4 Lg	10
3	D-5278	Flange Lock Nut - 5/16	10
4	D-5279	Lock Nut - 3/8 Serrated	4
5	D10747	Sprocket - 40B48	2
6	D17808	Sprocket Idler - 40A17	1
7	D17946	Sprocket - 40B12	1
8	D-5277	Lock Nut - 1/4 Serrated	4
9	N16853	Oillite Bushing - 1.003 ID x 1.253 OD x 1 1/4 Lg	2
10	N19706	Washer - 3/8 ID x 1 1/4 OD x 0.1 Thick	2
11	**N72140**	**Hydraulic Motor - Danfoss OMPX-80 - 2021 to present (See Page 22-44)**	1
	N29319	Hydraulic Motor - DANFOSS DH80 - Prior to 2021 **(See Page 22-44)**	1
12	N29338	Sprocket - 40B24	1
13	* * * * *		
14	N29341	Shaft-Slow Speed - 5 3/8 Lg	1
15	N13967	Chain - #40 x 62 Link W/Conn S10954 - Connector #40 Chain S10955 - Offset Connector #40 Chain (Not Shown)	1
16	N29371	Shim	1
17	N29375	Drive Pin - 5/16 x 1 1/2 (Groove)	1
18	N37219	Carriage Bolt - 3/8 x 4 1/2 Lg	1
19	N45530	Shaft -Slow Speed - 40A12 - (72 Teeth On Sensor Wheel)	1
20	N21055	U-Bolt - 1/4 Dia x 3/4 x 1 3/8 UL	1
21	N34961	Machine Screw - #10-24 x 3/4	4
22	N37787	Nylon Locknut - #10-24	4
23	N50842	Bushing - .385 ID x 5/8 OD x 3 1/4 Lg	1
24	N51246	Transmission Weldment	1
25	N53692	Shaft-Meter End - 10 13/16 Lg	1
26	N53889	Flangette Bearing - 1" Bore	5
27	P1318510	Hairpin - #19	1
28	N50656	Cover Stop	2
29	S-752	Grease Fitting - 1/4 Straight	2
30	S10730	Key - 1/4 x 1/4 x 1 1/4 Lg	4
31	W-488	Hex Bolt - 1/2 x 2 Lg	2
32	W-514	Hex Nut - 3/8	1
33	W-516	Hex Nut - 1/2	2
34	W-523	Lockwasher - 3/8	1
35	W-525	Lockwasher - 1/2	2
36	N62361	Mount Plate	1
37	N50678	Brace Plate	1
38	N50691	Rubber Draw Latch	1
39	N51201	Upper Bracket	2
40	N62003	Main VR Chain Guard	1
41	S-5777	Chain - #40 x 84 Link W/Conn & Off	1
42	W-469	Hex Head - 1/4 x 3/4 Lg	2
43	W-475	Hex Bolt - 3/8 x 1 Lg	4
44	D14565	Flange Locknut - 1/2 Serrated	2
45	S-1925	Flatwasher - 1/2	2
46	W-496	Hex Bolt - 1/2 x 5 1/2 Lg	2
	N51245	Transmission Assembly - Contains all above items	1

ICT Transmissions
Rear - 9365, 9450, 9535 (Prior to 2017)

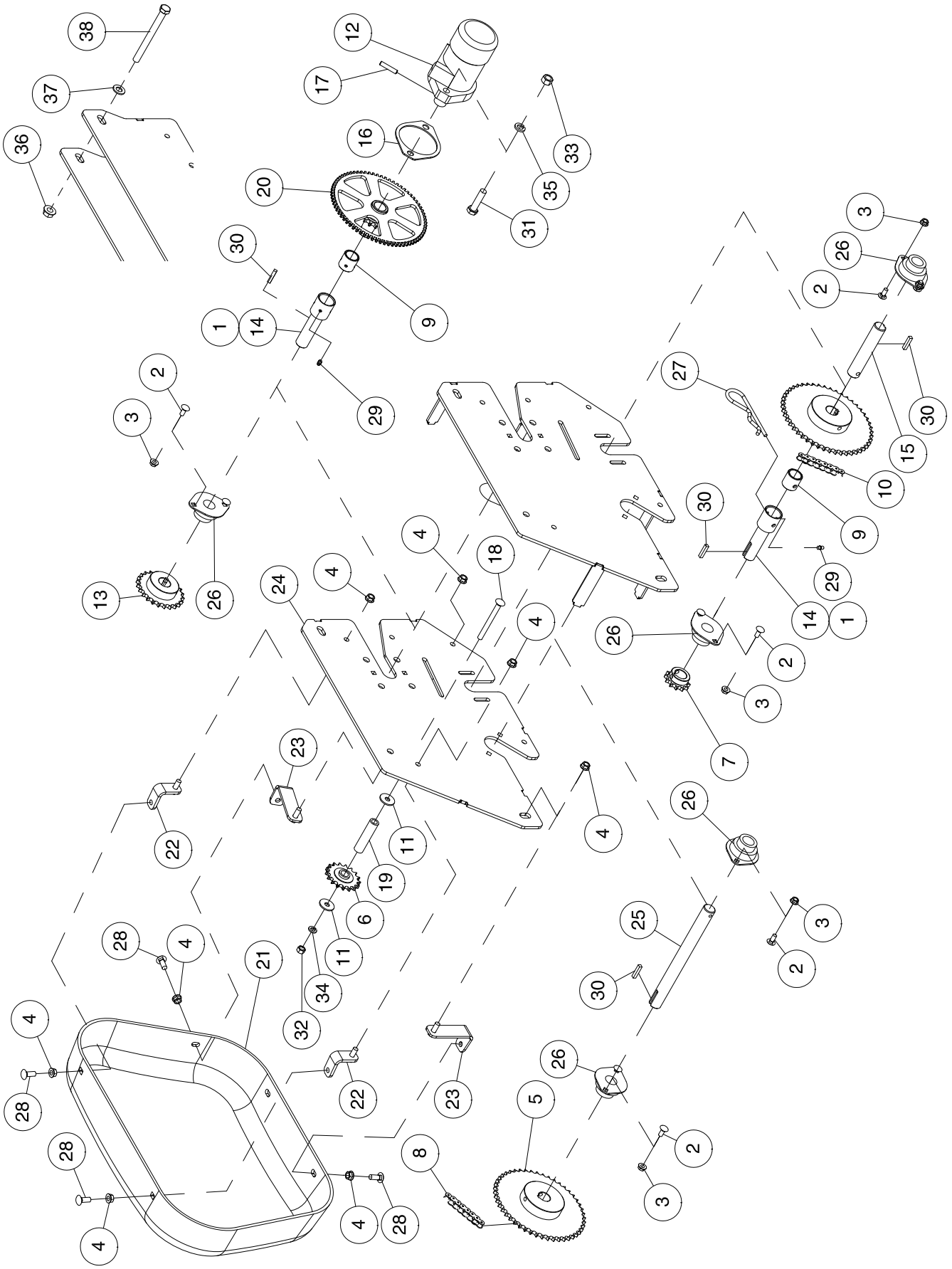

Rear ICT Transmissions - 9365, 9450, 9535 (Prior to 2017)

Item	Part No.	Description	Qty
1	N29340	Shaft - VRT Slow Speed - 1 1/2 Dia x 5 Lg (Contains Item 9)	2
2	D-5259	Carriage Bolt - 5/16 x 3/4 Lg	10
3	D-5278	Lock Nut - 5/16 Flange	10
4	D-5279	Lock Nut - 3/8 Flange Serrated	8
5	D10747	Sprocket - 40B48	2
6	D17808	Sprocket Idler - 40A17 - W/5/8 Bore	1
7	D17946	Sprocket - 40B12	1
8	N14262	Chain - #40x80 Link W/Conn	1
9	N16853	Oillite Bushing - 1.003 ID x 1.253 OD x 1-1/4 Lg	2
10	N19258	Chain - #40 x 64 Link With Connector S10954 - Connector #40 Chain S10955 - Offset Connector #40 Chain (Not Shown)	1
11	N19706	Flatwasher - 3/8	2
12	N29319	Hydraulic Motor - DANFOSS DH80 - **(See Page 22-44)**	1
13	N29338	Sprocket - 40B24	1
15	N29341	Shaft-Slow Speed - 1 Dia x 5 3/8 Lg	1
16	N29371	Shim	1
17	N29375	Groove Pin - 5/16 x 1 1/2	1
18	N29398	Carriage Bolt - 3/8 x 4 Lg	1
19	N29399	Bushing - 3/4 OD x .482 ID x 3 1/8 Lg	1
20	N45530	Shaft - Slow Speed	1
21	N50195	Rear VR Chain Guard	1
22	N50198	Retainer Clip - Upper	2
23	N50777	Retainer Clip - Strt	2
24	N53690	Transmission Weldment	1
25	N53692	Shaft-Meter End - 1 Dia x 10 13/16 Lg	1
26	N53889	Flangette Bearing - 1" Bore	5
27	P1318510	Hairpin - #19 x 4.375 Lg	1
28	P7C616	Carriage Bolt - 3/8 x 1 Lg	4
29	S-752	Grease Zerk - 1/4 Straight	2
30	S10730	Key - 1/4 x 1/4 x 1 1/4 Lg	4
31	W-488	Hex Bolt - 1/2 x 2 Lg	2
32	W-514	Hex Nut - 3/8	1
33	W-516	Hex Nut - 1/2	2
34	W-523	Lockwasher - 3/8	1
35	W-525	Lockwasher - 1/2	2
36	D14565	Locknut - 1/2 Flange Serrated	2
37	S-1925	Flatwasher - 1/2	2
38	W-496	Hex Bolt - 1/2 x 5 1/2 Lg	2
	N53691	Transmission Assembly - Contains all above items	1

ICT Transmissions
Rear - 9365, 9450, 9535

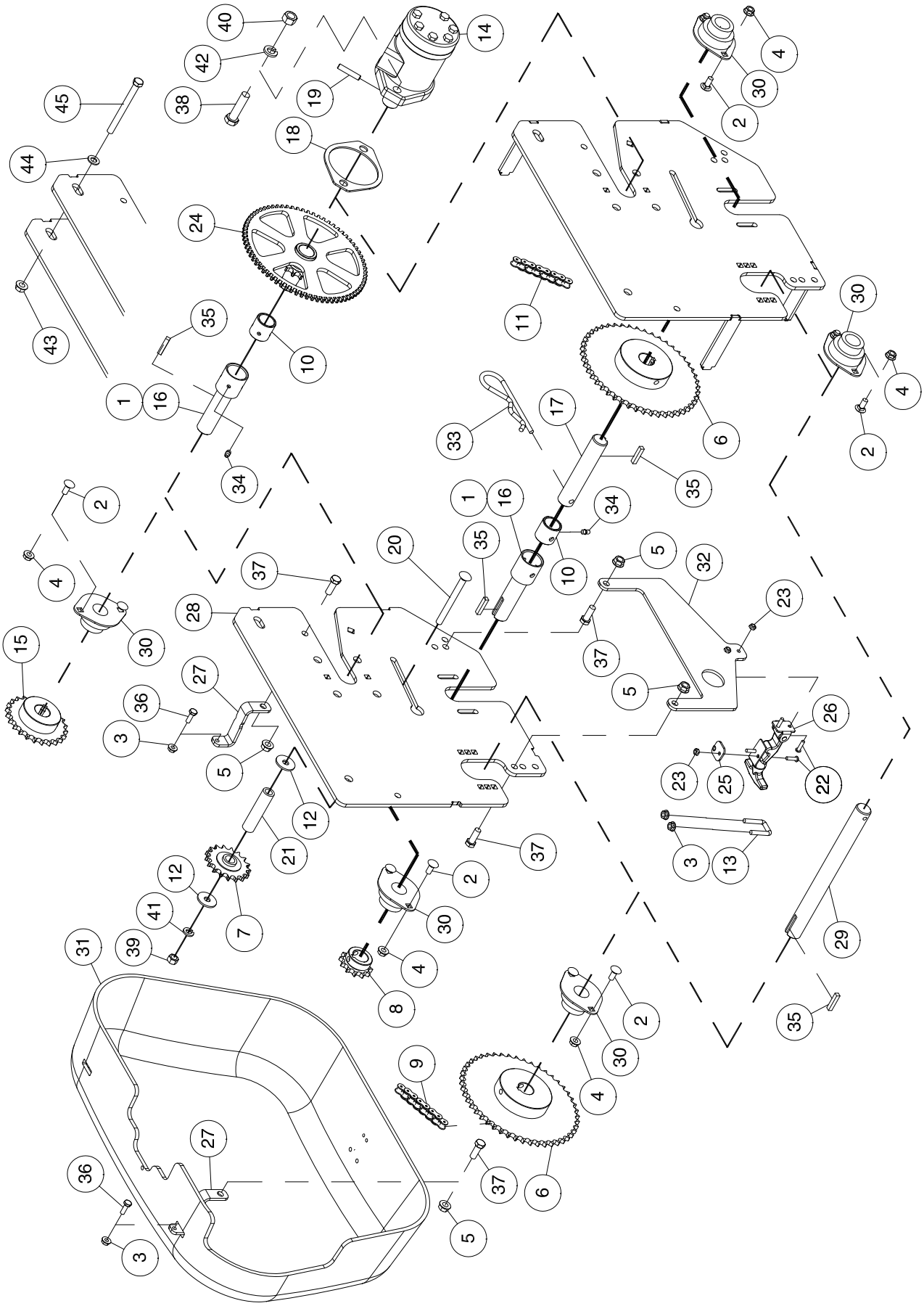

Rear ICT Transmissions - 9365, 9450, 9535

Item	Part No.	Description	Qty
1	N29340	Shaft - VRT Slow Speed - 1 1/2 Dia x 5 Lg (Contains Item 10)	2
2	D-5259	Carriage Bolt - 5/16 x 3/4 Lg	10
3	D-5277	Lock Nut - 1/4 Serrated	4
4	D-5278	Flange Lock Nut - 5/16	10
5	D-5279	Lock Nut - 3/8 Serrated	4
6	D10747	Sprocket - 40B48	2
7	D17808	Sprocket Idler - 40A17	1
8	D17946	Sprocket - 40B12	1
9	N14262	Chain - #40 x 80 Link W/Conn	1
10	N16853	Oillite Bushing	2
11	N19258	Chain - #40 x 64 Link With Connector S10954 - Connector #40 Chain S10955 - Offset Connector #40 Chain (Not Shown)	1
12	N19706	Washer - 3/8 ID x 1 1/4 OD x 0.1 Thick	2
13	N21055	U-Bolt - 1/4 Dia x 3/4 x 1 3/8 UL	1
14	**N72140**	**Hydraulic Motor - Danfoss OMPX-80 - 2021 to present (See Page 22-44)**	1
	N29319	Hydraulic Motor - DANFOSS DH80 - Prior to 2021 **(See Page 22-44)**	1
15	N29338	Sprocket - 40B24	1
16	* * * * *		
17	N29341	Shaft-Slow Speed - 5 3/8 Lg	1
18	N29371	Shim	1
19	N29375	Drive Pin - 5/16 x 1 1/2 (Groove)	1
20	N29398	Carriage Bolt - 3/8 x 4 Lg	1
21	N29399	Bushing - 3/4 OD x .482 ID x 3 1/8 Lg	1
22	N34961	Machine Screw - #10-24 x 3/4	4
23	N37787	Nylon Locknut - #10-24	4
24	N45530	Shaft -Slow Speed - 40A12 - (72 Teeth On Sensor Wheel)	1
25	N50678	Brace Plate	1
26	N50691	Rubber Draw Latch	1
27	N51201	Upper Bracket	2
28	N51246	Transmission Weldment	1
29	N53692	Shaft-Meter End - 10 13/16 Lg	1
30	N53889	Flangette Bearing - 1" Bore	5
31	N62002	Chain Guard - Mid & Large Frame (Priror to 2023)	1
	N62217	Chain Guard Steel - Rear **(2023 to Present)** Not Shown	1
32	N62361	Mount Plate	1
33	P1318510	Hairpin - #19	1
34	S-752	Grease Fitting - 1/4 Straight	2
35	S10730	Key - 1/4 x 1/4 x 1 1/4 Lg	4
36	W-469	Hex Head - 1/4 x 3/4 Lg	2
37	W-475	Hex Bolt - 3/8 x 1 Lg	4
38	W-488	Hex Bolt - 1/2 x 2 Lg	2
39	W-514	Hex Nut - 3/8	1
40	W-516	Hex Nut - 1/2	2
41	W-523	Lockwasher - 3/8	1
42	W-525	Lockwasher - 1/2	2
43	D14565	Flange Locknut - 1/2 Serrated	2
44	S-1925	Flatwasher - 1/2	2
45	W-496	Hex Bolt - 1/2 x 5 1/2 Lg	2
	N53691	Transmission Assembly - Contains all above items	1

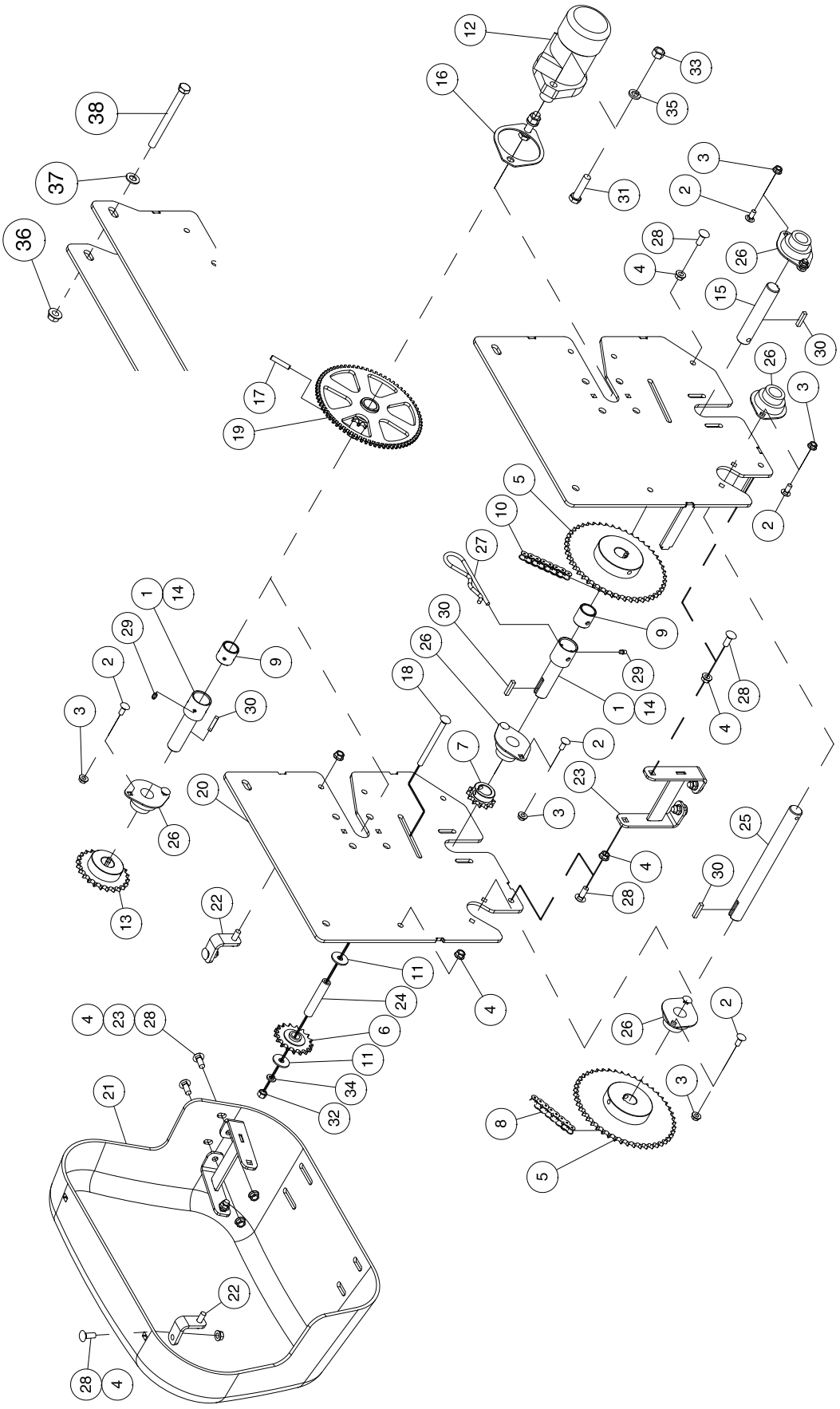
12
16
33
35
38
37
36
31
3
2
28
4
26
15
30
17
19
5
10
27
9
1
14
29
18
7
20
23
25
13
22
11
24
6
34
32
21
8

ICT Transmissions - 9445, 9550, 9650, 9800 and 91000 (Prior to 2017)

Item	Part No.	Description	Qty
1	N29340	Shaft - VRT Slow Speed - 1 1/2 Dia x 5 Lg (Contains Item 9)	2
2	D-5259	Carriage Bolt - 5/16 x 3/4 Lg	10
3	D-5278	Flange Lock Nut - 5/16	10
4	D-5279	Lock Nut - 3/8 Serrated Flange	12
5	D10747	Sprocket - 40B48	2
6	D17808	Sprocket Idler - 40A17 - W/5/8 Bore	1
7	D17946	Sprocket -40B12	1
8	**S-5777**	**Chain - #40 x 84 Link W/Conn**	**1**
9	N16853	Oillite Bushing - 1.003 ID x 1.253 OD x 1-1/4 Lg	2
10	**N13967**	**Chain - #40 x 62 Link With Connector** S10954 - Connector #40 Chain S10955 - Offset Connector #40 Chain (Not Shown)	**1**
11	N19706	Washer-13/32ID x 1-1/4OD x.100	2
12	N29319	Hydraulic Motor - DANFOSS DH80 - **(See Page 22-44)**	1
13	N29338	Sprocket -40B24	1
14	* * * * *	Shaft - VRT Slow Speed - Contains Items (1 & 9)	2
15	N29341	Shaft-Slow Speed - 1 Dia x 5 3/8 Lg	1
16	N29371	Shim	1
17	N29375	Groove Pin - 5/16 x 1 1/2	1
18	N37219	Carriage Bolt - 3/8 x 4 1/2 Lg	1
19	N45530	Shaft -Slow Speed	1
20	N50091	Transmission Weldment	1
21	N50190	Transmission Guard	1
22	N50198	Retainer Clip - Upper	2
23	N50780	Cover Bracket	2
24	N50842	Bushing - 5/8 OD x .385 ID x 3 1/4 Lg	1
25	N53692	Meter Shaft -1 Dia x 10 13/16 Lg	1
26	N53889	Flangette Bearing - 1" Bore	5
27	P1318510	Hairpin - #19 x 4.375 Lg	1
28	P7C616	Carriage Bolt - 3/8 x 1 Lg	10
29	S-752	Grease Zerk - 1/4" Straight	2
30	S10730	Key - 1/4 x 1/4 x 1 1/4 Lg	4
31	W-488	Hex Bolt - 1/2 x 2 Lg	2
32	W-514	Hex Nut - 3/8	1
33	W-516	Hex Nut - 1/2	2
34	W-523	Lockwasher - 3/8	1
35	W-525	Lockwasher - 1/2	2
36	D14565	Locknut - 1/2 Flange Serrated	2
37	S-1925	Flatwasher - 1/2	2
38	W-496	Hex Bolt - 1/2 x 5 1/2 Lg	2
	N50090	Transmission Assembly - Contains all above items	1

9445, 9550 and 9650

Used on ALL tanks on Tow Behind models.
Used on Front tanks of Tow Between models - Prior to 2016
Used on ALL tanks of Tow Between models - 2016 to Present

9800 and 91000

Used on ALL tanks on Tow Behind and Tow Between models.

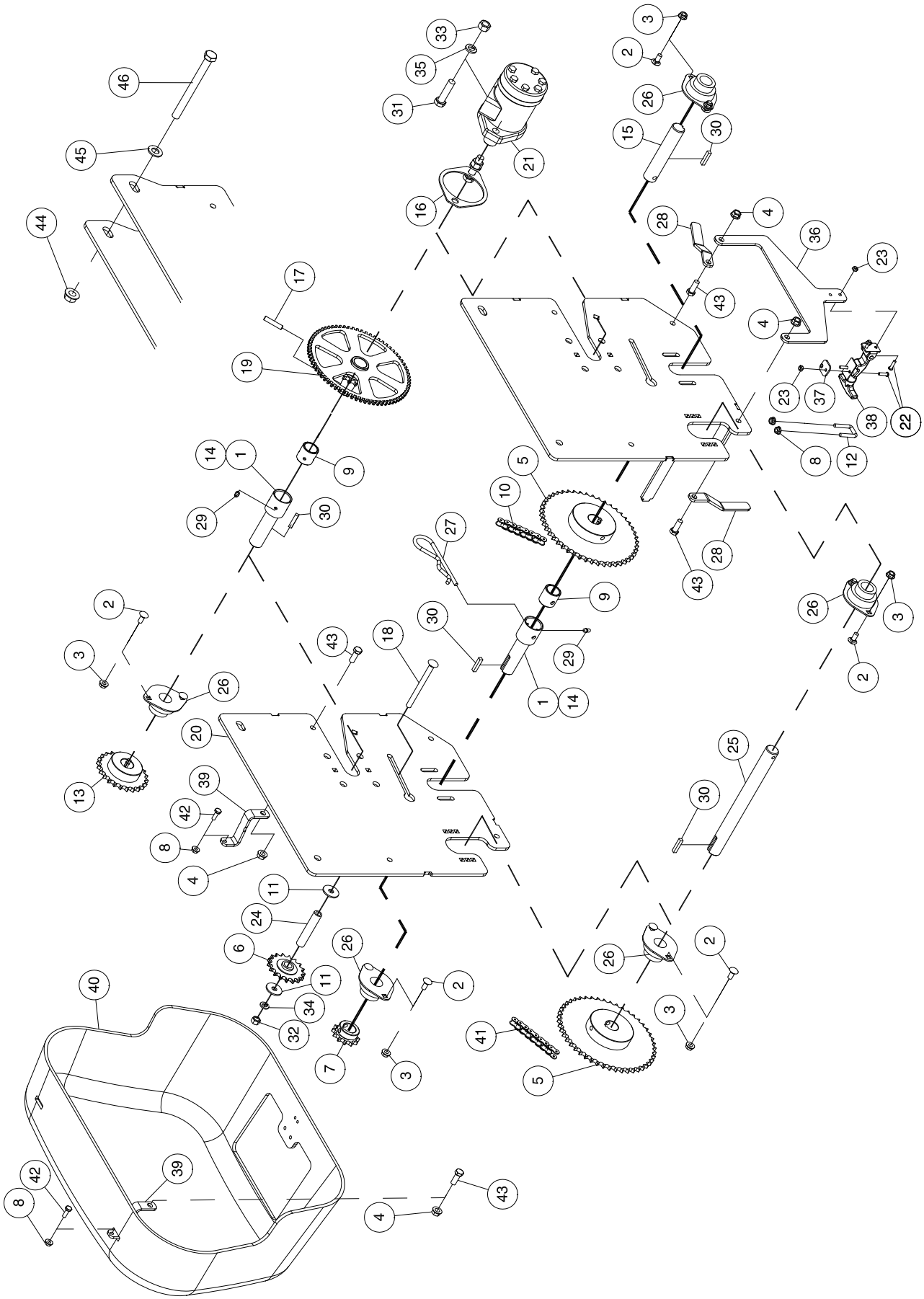
46
45
44
33
35
31
21
16
3
2
26
15
30
28
4
36
23
43
4
23
37
38
22
8
12
17
19
14
1
9
29
30
5
10
27
9
30
29
1
14
28
43
26
3
2
2
3
26
43
18
20
13
39
42
8
4
11
24
6
11
34
32
26
2
7
3
25
30
26
2
3
41
5
40
42
39
8
4
43

ICT Transmissions - 9445, 9550, 9650, 9800 and 91000

Item	Part No.	Description	Qty
1	N29340	Shaft - VRT Slow Speed - 1 1/2 Dia x 5 Lg (Contains Item 9)	2
2	D-5259	Carriage Bolt - 5/16 x 3/4 Lg	10
3	D-5278	Flange Lock Nut - 5/16	10
4	D-5279	Lock Nut - 3/8 Serrated	4
5	D10747	Sprocket - 40B48	2
6	D17808	Sprocket Idler - 40A17	1
7	D17946	Sprocket - 40B12	1
8	D-5277	Lock Nut - 1/4 Serrated	4
9	N16853	Oillite Bushing - 1.003 ID x 1.253 OD x 1-1/4 Lg	2
10	N13967	Chain - #40 x 62 Link W/Conn	1
		S10954 - Connector #40 Chain S10955 - Offset Connector #40 Chain (Not Shown)	
11	N19706	Washer - 3/8 ID x 1 1/4 OD x 0.1 Thick	2
12	N21055	U-Bolt - 1/4 Dia x 3/4 x 1 3/8 UL	1
13	N29338	Sprocket - 40B24	1
14	* * * * *	Shaft-Slow Speed - 5 Lg (Includes Items 1 & 9)	2
15	N29341	Shaft-Slow Speed - 5 3/8 Lg	1
16	N29371	Shim	1
17	N29375	Drive Pin - 5/16 x 1 1/2 (Groove)	1
18	N37219	Carriage Bolt - 3/8 x 4 1/2 Lg	1
19	N45530	Shaft -Slow Speed - 40A12 - (72 Teeth On Sensor Wheel)	1
20	N50091	Transmission Weldment	1
21	**N72140**	**Hydraulic Motor - Danfoss OMPX-80 - 2021 to present (See Page 22-44)**	1
	N29319	Hydraulic Motor - DANFOSS DH80 - Prior to 2021 **(See Page 22-44)**	1
22	N34961	Machine Screw - #10-24 x 3/4	4
23	N37787	Nylon Locknut - #10-24	4
24	N50842	Bushing - .385 ID x 5/8 OD x 3 1/4 Lg	1
25	N53692	Shaft-Meter End - 10 13/16 Lg	1
26	N53889	Flangette Bearing - 1" Bore	5
27	P1318510	Hairpin - #19	1
28	N50656	Cover Stop	2
29	S-752	Grease Fitting - 1/4 Straight	2
30	S10730	Key - 1/4 x 1/4 x 1 1/4 Lg	4
31	W-488	Hex Bolt - 1/2 x 2 Lg	2
32	W-514	Hex Nut - 3/8	1
33	W-516	Hex Nut - 1/2	2
34	W-523	Lockwasher - 3/8	1
35	W-525	Lockwasher - 1/2	2
36	N50677	Mount Plate	1
37	N50678	Brace Plate	1
38	N50691	Rubber Draw Latch	1
39	N51201	Upper Bracket	2
40	N62003	Main VR Chain Guard	1
41	S-5777	Chain - #40 x 84 Link W/Conn & Off	1
42	W-469	Hex Head - 1/4 x 3/4 Lg	2
43	W-475	Hex Bolt - 3/8 x 1 Lg	4
44	D14565	Flange Locknut - 1/2 Serrated	2
45	S-1925	Flatwasher - 1/2	2
46	W-496	Hex Bolt - 1/2 x 5 1/2 Lg	2
	N50090	Transmission Assembly - Contains all above items	1

9445, 9550 and 9650

Used on ALL tanks on Tow Behind models.
Used on Front tanks of Tow Between models - Prior to 2016
Used on ALL tanks of Tow Between models - 2016 to Present

9800 and 91000

Used on ALL tanks on Tow Behind and Tow Between models.

ICT Transmissions
Rear - 9445, 9550, 9650 Between - Prior to 2016

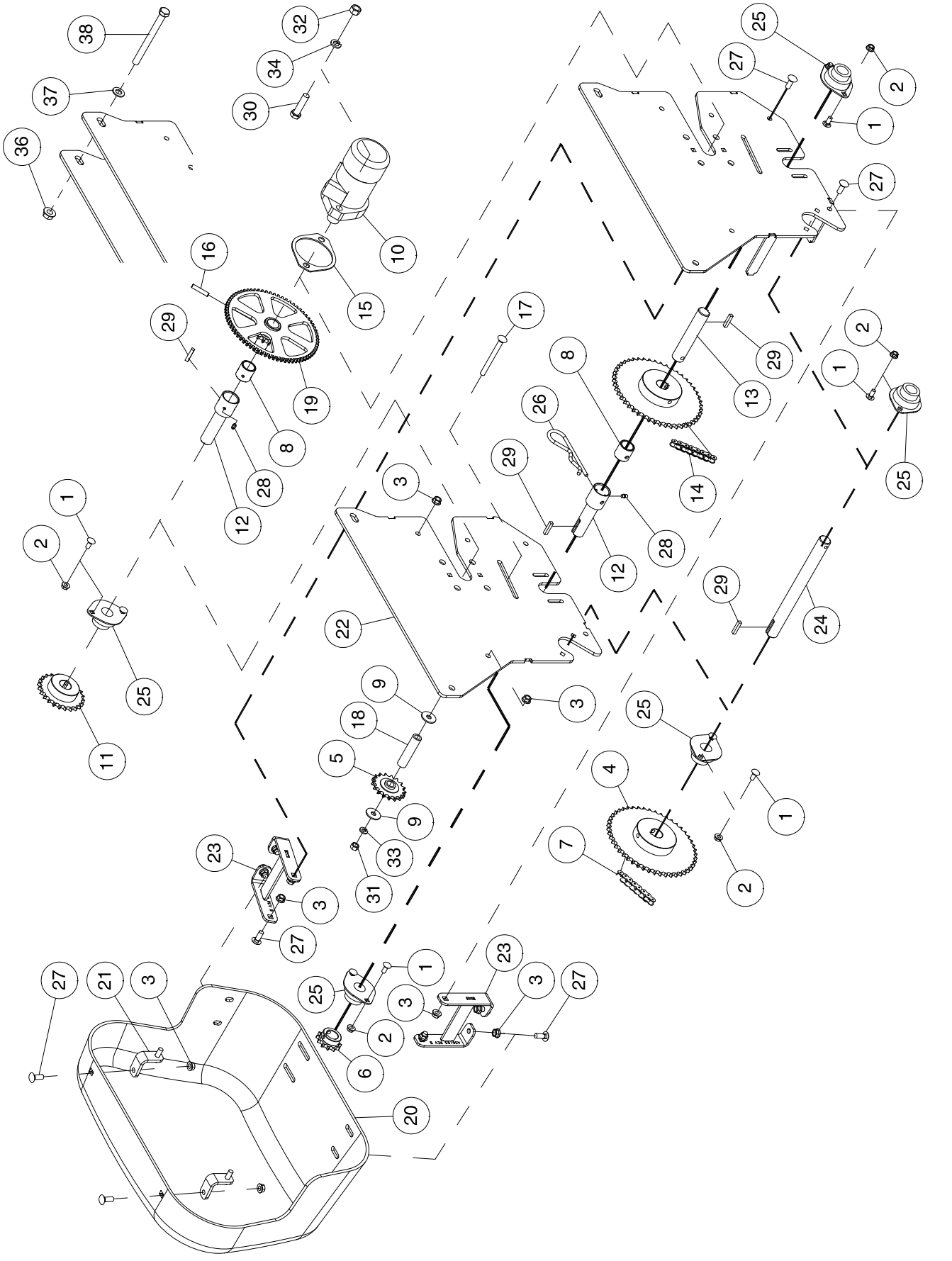

Rear ICT Transmissions - 9445, 9550, 9650 Between - Prior to 2016

Item	Part No.	Description	Qty
1	D-5259	Carriage Bolt - 5/16 x 3/4 Lg	10
2	D-5278	Lock Nut - 5/16 Flange	10
3	D-5279	Lock Nut - 3/8 Flange Serrated	12
4	D10747	Sprocket - 40B48	2
5	D17808	Sprocket - 40A17 Idler	1
6	D17946	Sprocket - 40B12	1
7	N14262	Chain - #40 x 80 Link W/Conn S10954 - Connector #40 Chain S10955 - Offset Connector #40 Chain (Not Shown)	1
8	N16853	Oillite Bushing - 1.003 ID x 1.253 OD x 1-1/4 Lg	2
9	N19706	Flatwasher - 3/8	2
10	**N72140**	**Hydraulic Motor - Danfoss OMPX-80 - 2021 to present (See Page 22-44)**	1
	N29319	Hydraulic Motor - DANFOSS DH80 - Prior to 2021 **(See Page 22-44)**	1
11	N29338	Sprocket - 40B24	1
12	N29340	Shaft-Slow Speed - Contains Item #8	2
13	N29341	Shaft-Slow Speed - 1 Dia x 5 3/8 Lg	1
14	N29368	Chain - #40 x 73 Link W/Conn & Off	1
15	N29371	Shim	1
16	N29375	Groove Pin - 5/16 x 1 1/2	1
17	N29398	Carriage Bolt - 3/8 x 4 Lg	1
18	N29399	Bushing - 3/4 OD x .482 ID x 3 1/8 Lg	1
19	N45530	Shaft - Slow Speed	1
20	N50190	Rear VR Chain Guard	1
21	N50198	Retainer Clip - Upper	2
22	N50672	Transmission Weldment	1
23	N50780	Cover Mtg Brkt	2
24	N53692	Meter End Shaft - 1 Dia x 10 13/16 Lg	1
25	N53889	Flangette Bearing - 1" Bore	5
26	P1318510	Hairpin - #19 x 4.375 Lg	1
27	P7C616	Carriage Bolt - 3/8 x 1 Lg	10
28	S-752	Grease Zerk - 1/4 Straight	2
29	S10730	Key - 1/4 x 1/4 x 1 1/4 Lg	4
30	W-488	Hex Bolt - 1/2 x 2 Lg	2
31	W-514	Hex Nut - 3/8	1
32	W-516	Hex Nut - 1/2	2
33	W-523	Lockwasher - 3/8	1
34	W-525	Lockwasher - 1/2	2
36	D14565	Locknut - 1/2 Flange Serrated	2
37	S-1925	Flatwasher - 1/2	2
38	W-496	Hex Bolt - 1/2 x 5 1/2 Lg	2
	N50671	Transmission Assembly - Contains all above items	1

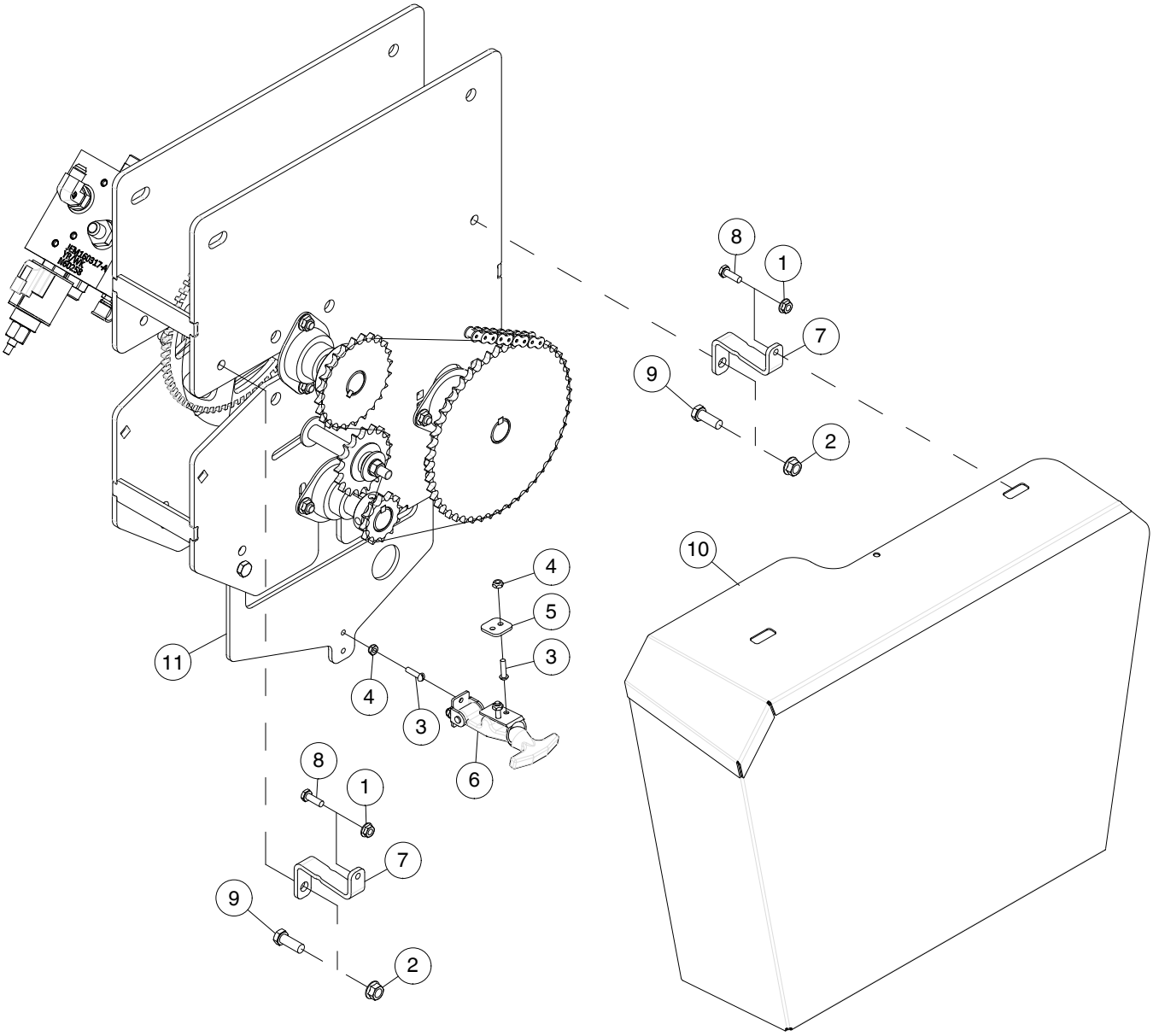

Item	Part No.	Description	Qty
1	D-5277	Locknut - 1/4 Serrated Flange	2
2	D-5279	Locknut - 3/8 Serrated Flange	4
3	N34961	Machine Screw - #10-24 x 3/4 Lg	4
4	N37787	Locknut - #10-24 Nylon Insert	4
5	N50678	Brace Plate	1
6	N50691	Rubber Draw Latch	1
7	N51201	Upper Bracket	2
8	W-469	Hex Head - 1/4 x 3/4 Lg	2
9	W-475	Hex Bolt - 3/8 x 1 Lg	4
10	N62217	Guard Steel - Transmission Rear	1
11	N62361	Mount Plate	1
	N62352	Narrow Transport Rear Transmission assembly - Refer Pg. 22-38	1

ICT Transmission
Drive Coupler

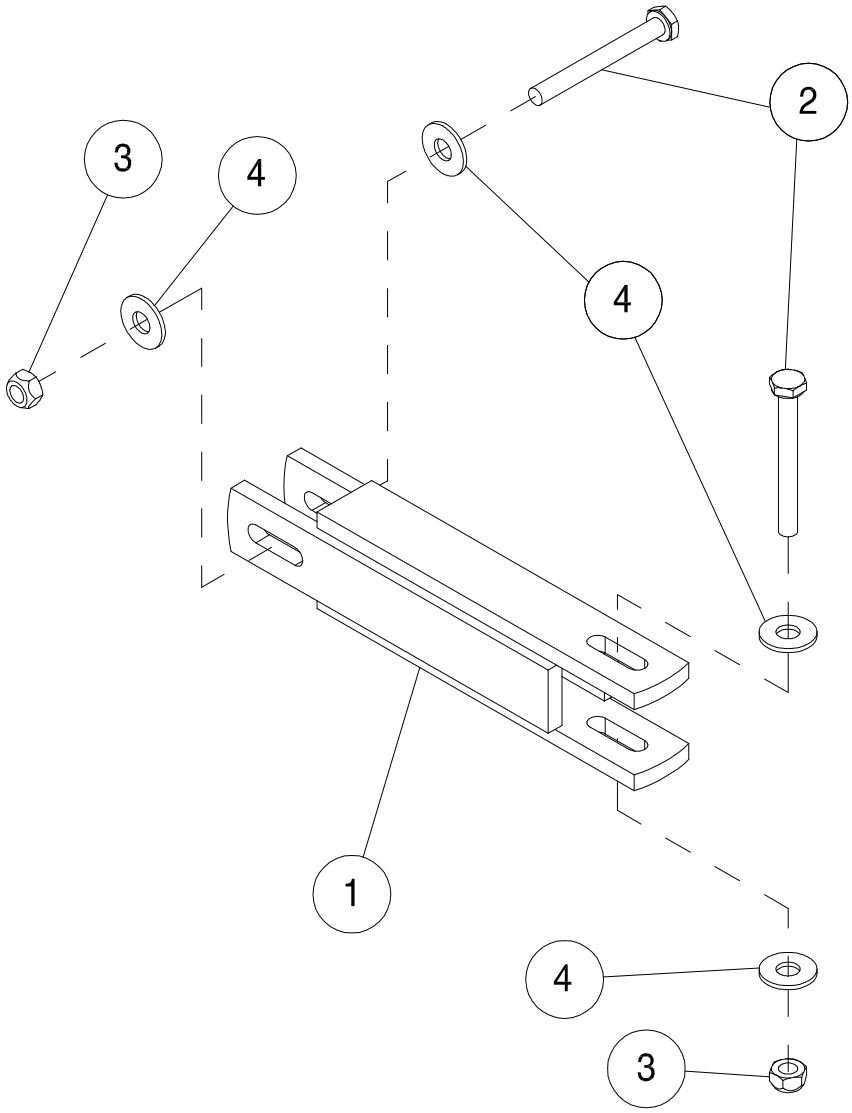

Item	Part No.	Description	Qty
1	N50860	Coupler - 4 13/16 Lg - 9365, 9450 and 9535 Air Cart	1
	N50858	Coupler - 6 1/2 Lg - 9445, 9550, 9650 and 9800 Air Cart	1
2	N22777	Hex Bolt - 1/4 x 2 1/4 Lg x 3/8 Thread Lg - GR 8	2
3	N22778	Locknut - 1/4 Nylon Insert	2
4	S-1198	Washer - 5/16 ID x 3/4 OD x .065 Thick	4

Valve Block - N48750

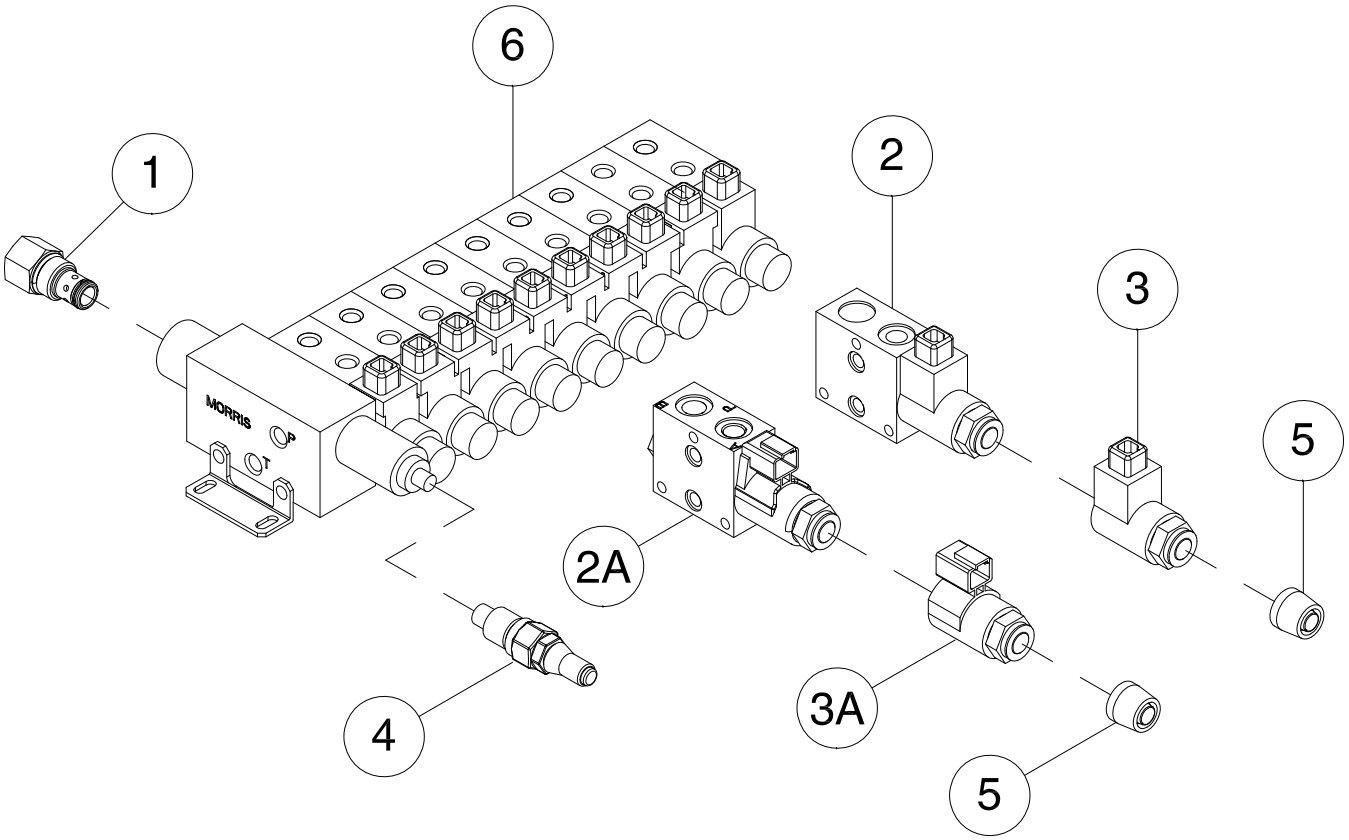

Item	Part No.	Description	Qty
1	N60433	Flow Control Valve	1
2	N60347	Soleniod Valve Block - Hirchman Connector (Prior to April 2015) (Includes items 3 & 5)	1
2A	**N60435**	**Soleniod Valve Block - Deutsch Connector** (April 2015 to 2017) (Includes 3A & 5A)	**1**
3	N60348	Soleniod Coil - Hirschman Connector (Prior to April 2015)	1
3A	**N60349**	**Soleniod Coil - Deutsch DT04-2P Connector** (April 2015 to 2017)	**1**
4	N60431	Relief Valve	1
5	N60432	Rubber Boot	1
6	N48750	Control Valve (Includes above items)	1

Valve Block - N58320

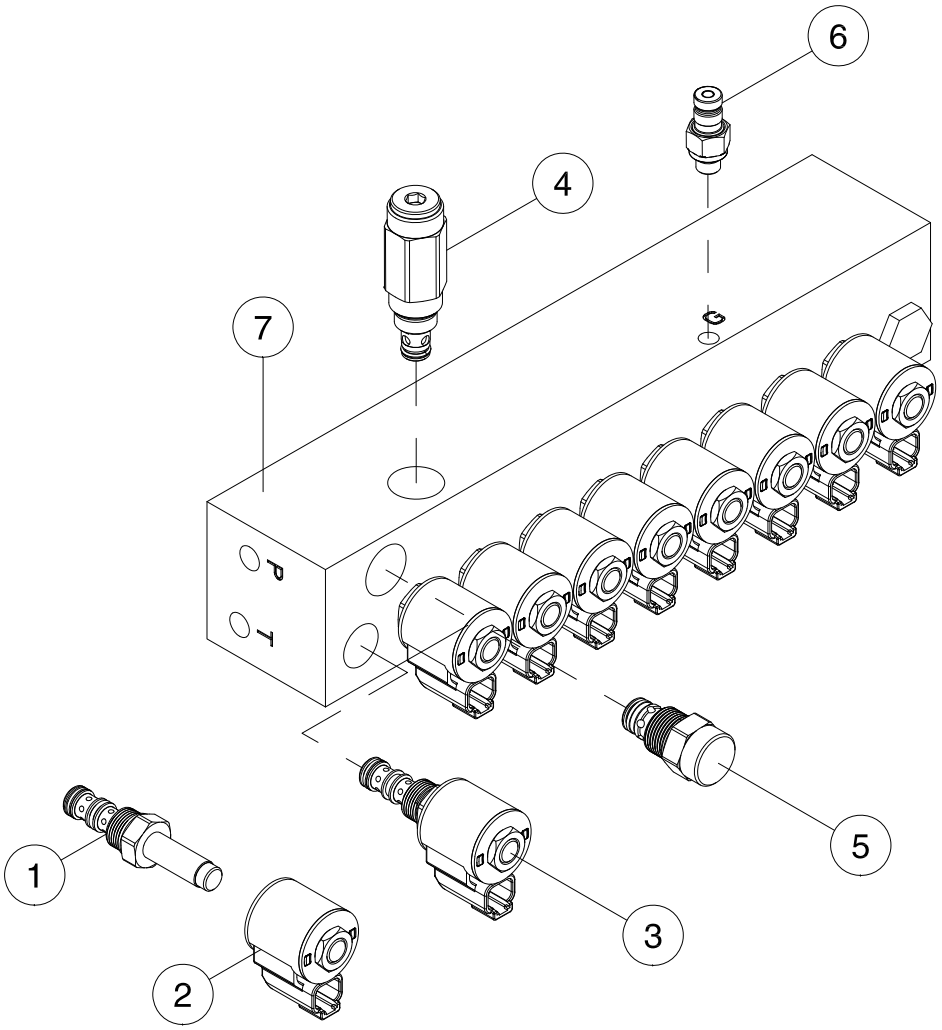

Introduced in 2016 on 9800 and 91000
Replaced N48750 on all models in 2017

Item	Part No.	Description	Qty
1	N60798	Valve	9
2	N60799	Soleniod - Deutsch DT04-2P Connector	9
3	N60950	Soleniod Valve - Deutsch DT04-2P Connector (Includes items 1 and 2)	9
4	N60951	Relief Valve	1
5	N60952	Flow Control Valve	1
6	N64583	Coupler - Test Port - 7/16-20 (#4) MORB	3
7	N58320	Control Valve - 10 Run (Includes above items)	1
	N29365	Plug - 9/16-18 (#06) MORB (Not Shown) used in un-used ports	

Sample Collection Tray
9365, 9450 and 9535

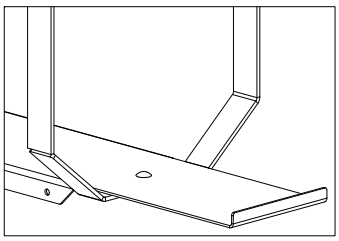

Mount Brackets to the Underside of the Bottom Plate

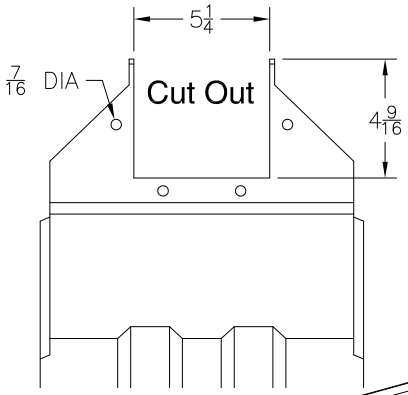

Item	Part No.	Description	Qty
1	D-5265	Carriage Bolt - 1/2 x 1 Lg	1
2	N19563	Tie Strap	1
3	N36120	Sample Collection Tray	1
	N58900	Metal Sample Tray (Plastic Tray interfers with Dual Tire re-inforcement bar)	1
4	N36287	Digital Scale	1
5	N37182	Bottom Plate	1
6	N37183	Bracket	2
7	N37829	Sampe Tray Strap	1
8	N37907	Flange Lock Nut - 1/2 W/Center Lock	1
9	N50869	Slide	1
10	N50740	ICT Cavity Rate Calibration Insert	1
11	N50742	ICT Rate Calitbration Assembly (Includes Items 1, 8, 9 and 10)	1
12	P7C616	Carriage Bolt - 3/8 x 1	2
13	S33420	Round Head Square Neck Carriage Bolt	2
14	W-513	Hex Nut - 5/16	2
15	W-514	Hex Nut - 3/8	3
16	W-522	Lockwasher - 5/16	2
17	W-523	Lockwasher - 3/8	4
18	W-475	Hex Bolt - 3/8 x 1 Lg	4
19	D-5489	Flatwasher - 13/32 ID x 13/16 OD x 16 Ga	4
20	N50736	Deflector Panel	1

Sample Collection Tray
9445, 9550 and 9650

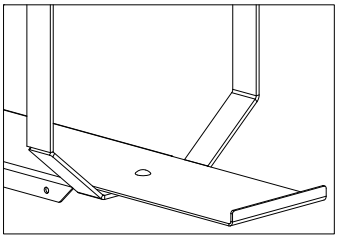

Mount Brackets to the Underside of the Bottom Plate

Item	Part No.	Description	Qty
1	D-5258	Carriage Bolt 1/4 x 3/4 Lg	4
2	D-5259	Carriage Bolt - 5/16 x 3/4 Lg	2
3	D-5265	Carriage Bolt - 1/2 x 1 Lg	1
4	N19563	Tie Down Strap	1
5	N22778	Locknut - 1/4 Nylon Insert	4
6	N36120	Sample Collection Tray	1
7	N37182	Bottom Plate	1
8	N37183	Bracket	2
9	N37829	Sampe Tray Strap	1
10	N37907	Flange Lock Nut - 1/2 W/Center Lock	1
11	N50869	Insert - Rate Calibration	1
12	N50740	ICT Cavity Rate Calibration Insert	1
13	N50742	ICT Rate Calitbration Assembly (Includes Items 3, 11, 10 and 12)	1
14	N42220	Digital Hanging Scale	1
15	N44597	Sample Tray Mount Plate	1
16	P7C616	Carriage Bolt - 3/8 x 1 Lg	2
17	W14399	U-Bolt - 3/8 x 4-7/8 UL	2
18	W-513	Hex Nut - 5/16	2
19	W-514	Hex Nut - 3/8	10
20	W-522	Lockwasher - 5/16	2
21	W-523	Lockwasher - 3/8	10
22	W-475	Hex Bolt - 3/8 x 1 Lg	4
23	D-5489	Flatwasher - 13/32 ID x 13/16 OD x 16 Ga	4
24	N50736	Deflector Panel	1

Sample Collection Tray
9445, 9550 and 9650 - 2016 to Present

Tow Behind

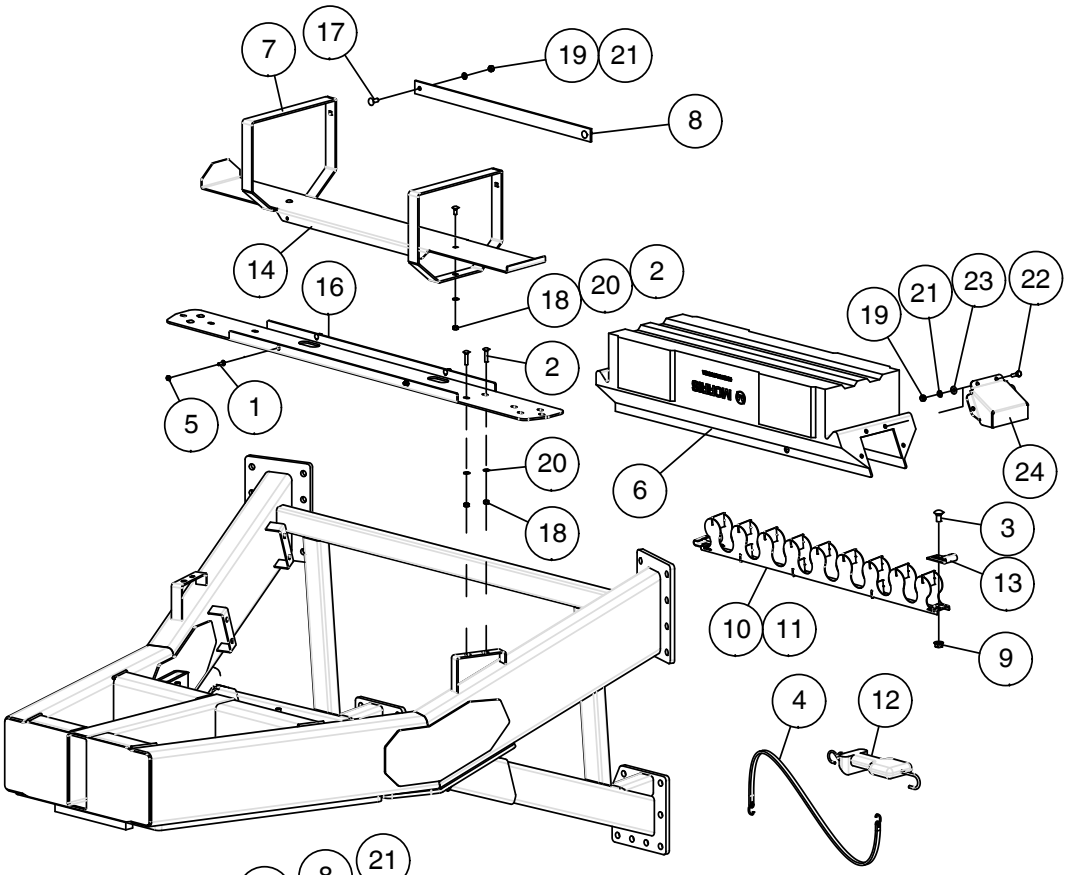

Tow Between

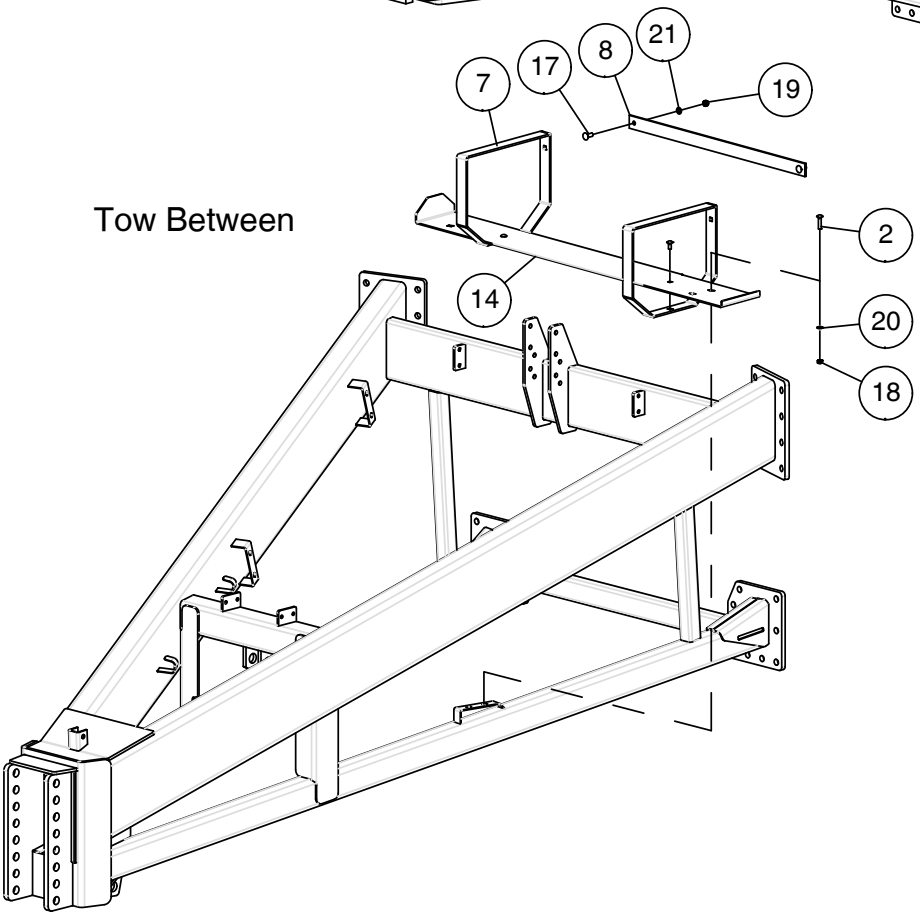

Sample Collection Tray - 9445, 9550 and 9650 - 2016 to Present

Item	Part No.	Description	Qty
1	D-5258	Carriage Bolt 1/4 x 3/4 Lg	4
2	D-5259	Carriage Bolt - 5/16 x 3/4 Lg	6
3	D-5265	Carriage Bolt - 1/2 x 1 Lg	1
4	N19563	Tie Down Strap	1
5	N22778	Locknut - 1/4 Nylon Insert	4
6	N36120	Sample Collection Tray - 9 Wide	1
7	N37183	Sample Collection Tray Bracket	2
8	N37829	Sampe Tray Strap	1
9	N37907	Lock Nut - 1/2 Flange W/Center Lock	1
10	N50740	**ICT** Cavity Rate Calibration Insert - 9 Wide	1
11	N50742	**ICT** Rate Callibration Insert Assembly - 9 Wide - Includes Items 3, 9, 10, 13	1
12	N42220	Digital Hanging Scale	1
13	N50869	Slider Clip	1
14	N37182	Retainer Plate - 9 Wide - **Tow Behind**	1
14A	N58304	Retainer Plate - 9 Wide - **Tow Between**	1
15	N51790	Sample Collection Tray - 10 Wide	1
16	N51791	Mount Plate - Sample Tray	1
17	P7C616	Carriage Bolt - 3/8 x 1 Lg	2
18	W-513	Hex Nut - 5/16	6
19	W-514	Hex Nut - 3/8	10
20	W-522	Lockwasher - 5/16	6
21	W-523	Lockwasher - 3/8	10
22	W-475	Hex Bolt - 3/8 x 1 Lg	4
23	D-5489	Flatwasher - 13/32 ID x 13/16 OD x 16 Ga	4
24	N50736	Deflector Panel	1

Sample Collection Tray
9800 - 91000

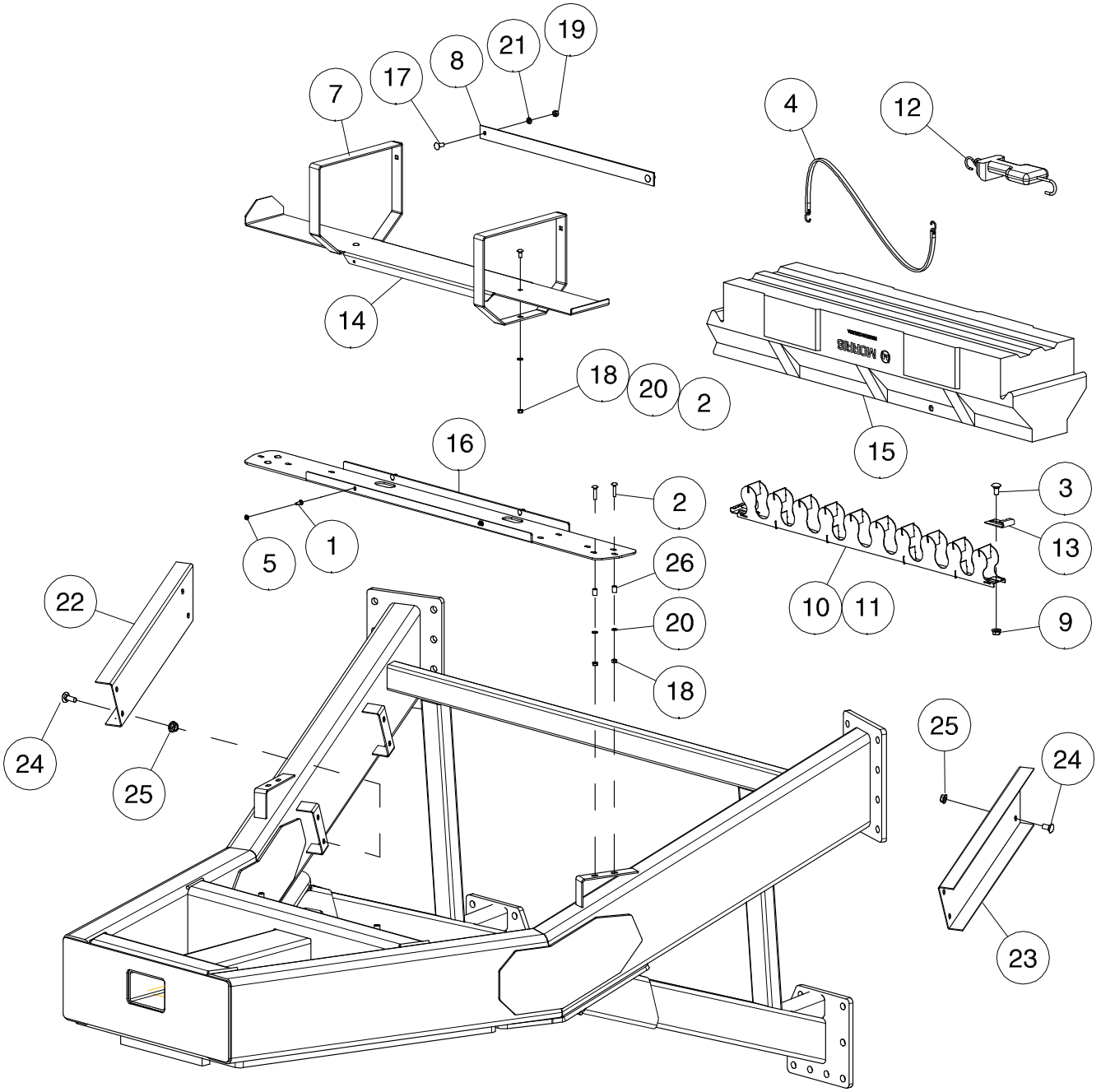

Sample Collection Tray - 9800 - 91000

Item	Part No.	Description	Qty
1	D-5258	Carriage Bolt 1/4 x 3/4 Lg	4
2	S51466	Carriage Bolt - 5/16 x 2 Lg - ICT	6
3	D-5265	Carriage Bolt - 1/2 x 1 Lg	1
4	N19563	Tie Down Strap	1
5	N22778	Locknut - 1/4 Nylon Insert	4
6	* * * * *		
7	N37183	Sample Collection Tray Bracket	2
8	N37829	Sampe Tray Strap	1
9	N37907	Lock Nut - 1/2 Flange W/Center Lock	1
10	N53687	ICT Cavity Rate Calibration Insert - 10 Wide	1
11	N53675	ICT Rate Callibration Insert Assembly - 10 Wide - Includes Items 3, 9, 10B, 13	1
12	N42220	Digital Hanging Scale	1
13	N50869	Slider Clip	1
14	N51789	Retainer Plate - 10 Wide	1
15	N51790	Sample Collection Tray - 10 Wide	1
16	N51791	Mount Plate - Sample Tray	1
17	P7C616	Carriage Bolt - 3/8 x 1 Lg	2
18	W-513	Hex Nut - 5/16	6
19	W-514	Hex Nut - 3/8	2
20	W-522	Lockwasher - 5/16	6
21	W-523	Lockwasher - 3/8	2
22	N51660	Hose Cover - Right	1
23	N51661	Hose Cover - Left	1
24	D-5260	Carriage Bolt - 3/8 x 1 1/4 Lg	8
25	D-5279	Lock Nut - 3/8 Serrated Flange	8
26	N15559	Bushing - 3/8 ID x 5/8 OD x 1 Lg - ICT	4

Transmission Orbit Motor

IMPORTANT: Confirm with customer which series motor they have.

Danfoss has discontinued the DH80 orbit motor. Morris Part number N29319. (Seal Kit N48071)

The replacement motor is **Danfoss OMPX 80.** Morris Part number **N72140. (Seal Kit N72139)**

This is a running change for the 2021 production year starting with the serial numbers listed below:

9365 BD is 9365211872 and newer
9365 BT is 9363211433 and newer
9450 BD is 9450213965 and newer
9450 BT is 9453213433 and newer
9535 BD is 9535216851 and newer
9445 BD is 9445215876 and newer
9445 BT is 9443215395 and newer
9550 BD is 9550214893 and newer
9550 BT is 9553214375 and newer
9650 BD is 9650213012 and newer
9650 BT is 9653212432 and newer
9800 BD is 9800217896 and newer (includes 2 and 3 tank models)
9800 BT is 9803217387 and newer (includes 2 and 3 tank models)
91000 BD IS 91000218871 and newer (includes 2 and 3 tank models)

Note: It is possible to have both series motors on the same Air Cart, so check each motor to determine which seal kits are required.

2022 to present the **Patriot PHDRSY-80** motor has been used to fill any shortages of the Danfoss OMPX 80 motor.



Patriot PHDRSY-80.
Morris Part number **N72408.**
Seal Kit N72409



Danfoss OMPX 80
Morris Part number **N72140**
Seal Kit N72139



Danfoss DH 80
Morris Part number **N29319**
Seal Kit N48071

Index

1-0298-1 6-13
1-0404-1 4-19
1-0427-1 4-19
1-0431-1 4-19
1-0559-1 4-19, 6-13
1-0759-1 4-19, 6-13
1-0822-1 4-19
1-0871-1 6-13
1-0872-1 6-13
1-0873-1 6-13
1-0874-1 6-13
2-0104-2 4-19
2-0280-2 4-19
2-0282-2 4-19
2-0422-2 4-19
2-0481-2 6-13
2-0483-2 6-13
2-0484-2 6-13
3-0206-3 4-19
3-206-3A 4-19
3-0648-3 4-19
3-0652-3 4-19
3-0705-3 4-19
3-1286-3 4-19
3-1287-3 4-19
3-1431-3 4-19, 6-13
3-1432-3 4-19, 6-13
3-1433-3A 4-19
3-1434-3 4-19
229-2 4-17
399-4 4-17
458-2 4-17
733-3 4-17
995-8 4-19
995-8A 4-19
1060-3 4-17
10229 1-9, 1-11, 19-53, 19-55, 19-61, 19-63, 19-65, 19-67, 19-69
11356 13-19
11570 1-15, 1-17, 20-11
11572 1-15, 1-17, 20-11
11573 1-15, 1-17, 20-11
24121-72 12-39
24121-73 12-39
24177-01 12-50, 12-51, 12-52
24253-01 , 12-49
24254-01 12-47, 12-49
24356-01 12-43, 12-45, 12-47, 12-49
24398-01 12-47, 12-49
24398-03 12-45, 12-47
24492-03 12-45, 12-47, 12-49
24574-02 12-51, 12-52
45076-01 12-50
45076-01-MR 12-51, 12-52
45416-01 12-43
45423-03 12-39
45427-01 12-43
45428-01 12-43
45431-81 12-43
46007-00 12-43
46011-00 12-50
80090 12-47
81003-00-MR 12-47, 12-49
81005-00-MR 12-45
81006-00-MR 12-45
81009-00-MR 12-45
81010-01-MR 12-47, 12-49
81014-00 12-51
81015-00-MR 12-45
81015-80 12-47
81018-00-MR 12-47, 12-49
81021-01-MR 12-45, 12-47
81022-81 12-47, 12-49
81028-01 12-45, 12-47
81028-01-MR 12-49
81030-00-MR 12-47, 12-49
81040-00-MR 12-47
81066-00-MR 12-52
81067-00-MR 12-52
81069-01-MR 12-52
81071-01-MR 12-47
81083-00-MR 12-49
81084-00-MR 12-49
81085-00-MR 12-51, 12-52
81089-00 12-49
81090-00 12-49
81094-01 12-49
81094-03 12-49
82024-01 12-49
82081-11 12-47
82081-12 12-47
82213-00-MR 12-51
82214-00-MR 12-51

A

A464 19-25, 19-28, 19-41
A467 19-28
A468 19-25, 19-28
A1258 19-25
A1526 19-28
A1705 19-25
A1734 19-25
A1771 19-25, 19-28
A1901 19-25
A2400 19-25
A2615 19-25
A2678 19-25
A3680 19-25, 19-28
A3681 19-25, 19-28
A3695 19-25, 19-28
A3737 19-25, 19-28
A3738 19-25, 19-28
A3739 19-37, 19-23, 19-25, 19-28
A3745 19-25
A71897 22-4
AFW-85 4-21, 4-23, 4-25, 4-27, 4-29, 4-31

B

BW-11 5-3

C

C-219 , 4-3, 5-3, 4-5, 4-7, 4-9, 5-5, 5-7, 5-8
C-333 12-25, 12-33, 12-35, 12-37
C-695 , 4-3, 4-5, 4-7, 4-15, 12-9, 12-11, 12-15, 12-17, 12-25, 12-33, 12-37, 10-43, 12-35
C-699 4-25, 4-29
C-705 4-5, 4-7, 4-9, 4-25, 5-4, 5-5, 5-6, 5-7, 5-8, 4-29
C-728 4-23, 4-27, 4-31
C-852 7-27, 7-31, 7-55
C-883 12-25, 12-33, 12-35, 12-37
C-1124 12-9, 12-11, 12-25, 12-37
C-1429 12-15, 12-33, 12-35
C-1526 12-25, 12-33, 12-35, 12-37
C-1550 5-3, 18-13, 18-16, 19-17, 7-19, 7-23, 7-49, 14-9, 7-11, 7-27, 7-31, 7-47, 14-6, 16-6, 16-9, 16-12, 14-27, 14-39, 14-53, 14-55, 17-6, 17-9, 16-15, 16-18, 16-25, 16-37, 17-9, 18-10, 17-12, 17-15, 17-18, 18-10, 19-77
C-3035 1-9, 1-11
C-3245 22-3, 22-4, 22-5
C-3525 4-25
C-3664 15-9, 18-13, 18-16, 14-19, 12-23, 12-9, 12-11, 14-13, 12-15, 14-16, 12-17, 14-23, 14-30, 12-31, 14-34, 14-37, 14-42, 16-12, 16-15, 16-18, 16-21, 16-28, 16-31, 16-34, 16-40, 14-46, 14-49, 17-12, 17-21, 16-43, 16-46, 17-15, 17-18, 18-19
C-3684 10-31, 10-37
C-3717 5-3, 12-25, 12-33, 12-35, 12-37
C-3917 4-13
C-3918 10-40, 10-41, 14-4, 14-7, 14-9, 15-4, 15-7, 15-15, 17-3, 17-6, 17-9, 18-3, 18-6, 18-11, 19-43, 19-45
C-4357 14-27, 14-30, 14-33, 14-36, 16-25, 16-28, 16-31, 16-34, 16-40
C-4366 12-19, 13-3, 13-5, 13-7
C-4368 12-41, 18-13, 18-14, 14-3, 14-13, 13-15, 13-17, 13-19, 14-51, 14-53, 17-3, 16-3, 16-4, 16-12, 16-13, 17-4, 17-12, 17-13
C-4369 12-41, 13-17, 13-19
C-4370 12-39, 14-6, 18-6, 14-9, 14-16, 14-19, 14-27, 14-30, 14-33, 14-36, 14-39, 14-42, 14-45, 14-51, 14-53, 14-55, 14-48, 16-6, 15-6, 16-7, 16-9, 16-10, 15-12, 16-15, 16-16, 16-18, 16-19, 16-25, 16-28, 16-31, 16-34, 16-37, 16-40, 16-43, 17-6, 17-7, 17-9, 17-10, 17-15, 17-16, 17-18, 16-46, 18-10, 18-11, 18-16, 18-17, 17-18, 17-19
C-4385 , 13-3, 13-5, 14-6, 13-7, 14-9, 13-15, 14-34, 14-51, 14-53, 14-55, 14-37, 16-4, 16-6, 15-6, 16-7, 16-9, 16-10, 16-26, 16-29, 16-32, 16-35, 16-38, 14-46, 14-49, 17-4, 17-7, 16-41, 16-44, 16-47, 17-6, 17-9, 18-10, 17-10, 18-11
C-4386 14-16, 15-12, 16-15, 17-15, 18-16
C-4387 15-9, 14-19, 13-7, 13-9, 13-11, 18-13, 18-14, 14-16, 18-16, 13-17, 14-20, 14-13, 14-3, 14-7, 16-9, 16-10, 14-10, 16-12, 16-13, 16-15, 16-

18, 16-26, 14-33, 14-36, 14-45, 14-48, 14-51, 17-4, 17-7, 17-10, 16-29, 16-31, 16-34, 16-38, 16-41, 16-43, 16-46, 17-10, 17-12, 17-13, 17-15, 17-18
C-4388 14-17, 18-17, 14-20, 16-16, 14-53, 17-16, 16-19, 17-19
C-4389 13-15, 13-17, 13-19
C-4392 15-15
C-4393 14-59, 14-61, 22-17, 22-19, 22-21, 22-23, 15-23, 22-25, 22-27
C-4394 14-51, 14-53, 15-19, 16-23, 17-23, 18-21
C-4401 15-17, 18-19
C-4403 13-13, 13-15, 13-17, 13-19, 14-33, 14-36, 15-15, 16-31, 16-34
C-4404 14-53
C-4468 , 13-3, 18-14, 14-4, 13-5, 13-7, 14-14, 13-15, 14-28, 14-31, 14-34, 14-37, 14-40, 14-51, 14-53, 14-55, 14-43, 16-3, 16-13, 16-26, 16-29, 16-32, 16-35, 16-38, 16-41, 14-46, 14-49, 16-44, 16-47, 17-4, 17-13
C-4469 12-41, 15-9, 18-17, 14-19, 14-3, 13-3, 13-5, 14-7, 13-7, 14-13, 13-15, 14-17, 13-17, 13-19, 14-20, 14-27, 14-30, 14-33, 14-36, 14-39, 14-51, 14-53, 14-55, 14-42, 14-45, 16-3, 15-3, 16-4, 16-6, 15-6, 16-7, 16-10, 16-12, 16-13, 16-16, 16-18, 16-19, 16-25, 16-26, 16-28, 16-29, 16-31, 16-32, 16-34, 16-35, 16-37, 16-38, 16-40, 16-41, 16-43, 14-48, 17-3, 17-4, 17-7, 17-12, 17-16, 17-18, 16-44, 16-46, 16-47, 18-3, 18-6, 18-13, 17-16, 17-19, 22-17, 22-19, 22-21
C-4552 13-15, 14-59, 14-61, 15-21, 15-23
C-4698 12-19, 4-27, 4-31, 12-39, 19-7, 4-23, 12-23, 12-27, 12-31, 4-34, 12-41, 13-3, 13-5, 13-7, 13-9, 13-11, 13-15, 13-17, 12-29, 14-3, 14-6, 14-9, 14-13, 14-16, 14-19, 13-19, 14-23, 14-27, 14-30, 14-33, 14-37, 14-39, 14-42, 14-45, 14-53, 14-55, 14-59, 14-61, 15-3, 15-9, 15-12, 15-17, 15-21, 15-23, 14-49, 16-3, 16-6, 15-6, 16-9, 16-12, 16-15, 16-18, 16-21, 16-25, 16-28, 16-31, 16-34, 16-37, 16-40, 16-43, 17-3, 17-6, 17-9, 17-12, 17-15, 17-18, 17-21, 16-46, 18-3, 18-6, 18-13, 18-16, 18-19, 19-5, 18-10
C-4709 4-3, 4-5, 4-21, 4-25, 4-29
C-5561 , 5-5
C12609 4-23, 4-27, 4-31
C13447 , 3-13, 1-17, 3-21, 3-23, 3-25, 4-31, 3-33, 3-35, 3-37, 3-9, 4-11, 3-11, 4-13, 4-23, 4-27
C14758 14-59, 15-23, 14-61
C14835 14-59, 14-61, 14-21, 13-13, 13-15
C14840 13-3, 13-5, 13-7, 13-9, 15-14, 14-19, 14-23, 14-4, 14-7, 14-10, 13-11, 14-13, 13-15, 14-16, 13-17, 13-19, 14-25, 14-33, 14-36, 14-45, 16-4, 16-7, 16-10, 16-12, 16-13, 16-15, 16-16, 16-18, 16-19, 16-21, 16-23, 16-26, 16-29, 16-31, 16-32, 16-34, 16-35, 16-38, 16-41, 16-43, 16-44, 16-46, 14-48, 17-4, 17-7, 17-10, 17-12, 17-15, 17-21, 17-23, 16-47, 17-18, 22-19, 22-21
C15310 14-9, 16-9, 17-9
C15317 14-20, 14-37, 14-49, 16-23, 16-34, 16-46, 17-23
C15318 13-3, 13-5, 18-6, 13-7, 13-15, 14-3, 14-6, 14-9, 13-17, 13-19, 14-53, 15-3, 14-55, 16-3, 15-6, 15-15, 17-3, 17-4, 17-6, 16-6, 17-7, 17-9, 16-9, 17-10, 17-13, 17-16, 17-21, 18-3, 18-4, 18-7, 18-10, 18-14, 18-17, 17-19, 18-11, 22-23, 22-25, 22-27
C15319 12-19, 4-34, 12-27, 12-29, 10-43, 14-4, 14-7, 14-10, 14-14, 14-17, 14-20, 14-23, 14-25, 14-33, 14-36, 14-45, 14-48, 16-12, 16-15, 16-18, 16-21, 16-23, 16-31, 16-34, 16-43, 16-46, 17-4, 17-7, 17-10, 17-13, 17-16, 17-19, 17-21, 17-23
C15330 4-33, 14-13, 14-16, 14-19, 14-21, 14-25, 14-33, 14-36, 14-45, 14-48, 16-12, 16-15, 16-18, 16-23, 16-31, 16-34, 16-43, 16-46, 17-12, 17-15, 17-18, 17-23
C15348 4-33, 14-21, 16-4, 16-7, 16-10, 16-13, 16-16, 16-19, 16-26, 16-29, 16-32, 16-35, 16-38, 16-41, 16-44, 16-47
C15349 13-5, 13-7, 13-13, 13-15, 14-59, 13-17, 13-19
C15768 4-32
C15839 16-25, 16-28
C16652 14-61, 15-23
C18510 12-9, 12-11, 12-15, 12-17, 12-19, 12-25, 12-27, 12-29, 12-33, 12-35, 12-37, 12-41
C18597 4-7, 4-9, 4-11, 7-49, 5-4, 5-5, 5-7, 5-8, 4-13, 5-6, 7-45, 7-47, 19-21
C18756 5-7, 5-8
C18761 5-3
C18779 14-28, 14-31, 14-34, 14-37, 14-40, 14-43, 14-46, 14-49, 14-51, 14-53, 14-55, 16-26, 16-29, 16-32, 16-35, 16-38, 16-41, 16-44, 16-47, 18-10
C18782 12-9, 12-11, 12-15, 12-17, 12-25, 12-33, 12-35, 12-37
C21667 7-14, 19-11
C22785 12-19, 12-21, 12-23, 12-27, 12-29, 12-31
C24585 14-25, 16-4, 16-21, 14-23, 17-21
C26086 12-9, 12-11, 12-15, 12-17, 12-25, 12-33, 12-35, 12-37
C26259 , 13-3, 13-5, 13-7, 14-13, 13-15, 13-17, 14-7, 14-4, 16-6, 16-3, 17-4, 17-7
C26266 12-9, 12-11, 12-15, 12-17, 12-25, 12-33, 12-35, 12-37
C26323 4-9
C26333 , 14-27, 14-30, 16-25, 16-26, 16-28, 16-29, 16-32, 14-34, 16-35, 16-37, 14-37, 16-38, 14-39, 16-40, 16-41, 14-42, 16-44, 14-46, 16-47, 14-49
C26339 13-13, 14-61, 13-17, 13-19
C26344 , 18-17, 16-6, 16-7, 14-7, 14-17, 14-20, 16-4, 17-7, 17-16, 16-16, 17-19, 16-19, 17-7, 17-16, 17-19
C26345 13-9, 13-11
C26346 13-15
C26347 13-13, 13-17, 13-19
C26358 14-3, 14-6, 14-9, 14-13, 14-16, 14-19, 14-25, 15-3, 15-6, 15-9, 15-12, 15-19, 16-3, 16-6, 16-9, 16-12, 16-15, 16-18, 16-23, 17-3, 17-6, 17-9, 17-12, 17-15, 17-18, 17-23, 18-3, 18-6, 18-10, 18-13, 18-16, 18-21
C26438 14-59, 15-21
C26444 13-15, 13-17, 13-19, 14-28, 14-31, 14-40, 14-43
C26525 1-9, 1-11, 1-13, 1-15, 1-17, 1-19
C26710 7-45
C28505 14-4, 14-7, 14-10, 14-14, 14-17, 14-20, 14-23, 14-34, 14-37, 14-46, 14-49, 16-13, 16-16, 16-19, 16-21, 16-23, 16-31, 16-34, 16-43, 16-46, 17-4, 17-7, 17-10, 17-13, 17-16, 17-19, 17-21, 17-23
C29193 12-19, 12-23
C29572 19-17
C29579 19-17
C31353 5-6
C31369 15-15, 22-27
C31374 19-17
C32681 20-5, 20-12

C32682 20-5, 20-12
C32684 20-5
C32685 20-5
C32686 20-5
C32688 20-5
C32689 20-5
C32690 20-5
C32741 12-9, 12-11, 12-15, 12-17, 12-25, 12-33, 12-35, 12-37
C32925 21-3, 21-5
C33957 5-8
C34801 5-6
C34802 5-6
C34837 5-6
C34839 5-6
C34843 5-6
C39175 15-14, 4-32, 4-33, 14-21
C39424 4-32
C42312 13-19
C44003 16-4, 16-10, 16-16, 16-19, 16-26, 16-29, 16-32, 16-35, 16-38, 16-41, 16-44, 16-47
C44745 12-33, 12-35, 13-15
C47188 12-15, 12-17, 12-25, 12-33, 12-35, 12-37, 13-5, 13-7, 13-13, 13-15, 13-17, 13-19
C47335 12-15, 12-17, 13-5, 13-7
C49924 12-25, 12-33, 12-35, 12-37, 13-13, 13-15, 13-17, 13-19
C51152 13-13, 13-15, 12-35, 13-17, 13-19, 12-33, 12-37
C51153 12-25, 12-33, 12-35, 12-37, 13-13, 13-15, 13-17, 13-19
C51984 5-6
C51986 5-6
C51991 13-13, 13-15, 12-35, 13-17, 13-19, 12-33, 12-37
C51992 12-15, 12-17, 12-25, 12-33, 12-35, 13-5, 13-7, 13-13, 13-15, 13-17, 13-19
C51993 12-15, 12-17, 12-33, 12-35, 13-7, 13-13, 13-15
C55740 13-17, 12-37, 13-13, 13-19, 12-25
C60622 13-13, 12-25, 13-17, 13-19, 12-37
C62059 12-33, 12-35, 12-37
C62060 12-33, 12-35, 12-37

D

D-4808 4-23, 4-27, 4-31, 4-34, 12-27, 12-29, 13-9, 13-11, 14-3, 14-6, 14-9, 14-17, 14-20, 14-23, 14-27, 14-30, 14-34, 14-37, 14-39, 14-42, 14-46, 14-49, 15-3, 15-6, 15-15, 15-17, 16-3, 16-6, 16-9, 16-16, 16-19, 16-21, 16-25, 16-28, 16-31, 16-34, 16-37, 16-40, 16-43, 16-46, 17-3, 17-6, 17-9, 17-16, 17-19, 17-21, 18-3, 18-6, 18-10, 18-19
D-4820 7-11, 7-19
D-4838 15-19, 17-23, 7-37, 19-7, 18-7, 18-16, 19-35, 7-39, 19-39, 19-41, 13-3, 14-4, 13-5, 14-7, 13-7, 13-9, 14-10, 13-11, 14-13, 13-15, 14-16, 13-17, 14-19, 13-19, 14-25, 14-27, 14-31, 14-33, 14-36, 14-39, 14-43, 14-45, 14-48, 16-3, 15-4, 16-6, 15-7, 16-9, 15-9, 16-12, 15-12, 16-15, 15-15, 16-18, 15-19, 16-23, 16-25, 17-23, 16-29, 16-31, 16-34, 16-37, 16-41, 16-43, 16-46, 18-4, 17-4, 17-7, 17-10, 17-12, 17-15, 17-18, 19-5, 18-11, 18-13, 18-21, 19-37, 19-45, 19-47, 19-55, 19-57, 19-63, 19-65, 19-67, 19-69, 19-71, 19-73, 20-9, 20-11
D-4951 , 18-7, 13-3, 13-5, 20-11, 19-12, 1-15, 18-16, 1-17, 14-4, 14-7, 13-7, 13-9, 14-10, 13-11, 14-13, 13-15, 14-16, 13-17, 14-19, 13-19, 14-23, 14-27, 14-31, 14-33, 14-36, 14-39, 14-43, 14-45, 14-48, 16-3, 15-4, 16-6, 15-7, 16-9, 15-9, 16-12, 15-12, 16-15, 16-18, 16-21, 16-25, 16-29, 16-31, 17-4, 17-21, 16-34, 16-37, 16-41, 16-43, 16-46, 18-4, 17-7, 17-10, 17-12, 17-15, 17-18, 18-13, 18-11, 18-19, 21-5, 20-5
D-5011 , 14-6, 14-3, 16-3, 16-6, 14-30, 14-42, 17-3, 16-28, 16-40, 17-6
D-5064 1-9
D-5140 5-3
D-5239 12-19, 4-32, 4-16, 5-9, 12-21
D-5243 1-9, 1-11
D-5244 12-25, 12-37
D-5247 6-2, 6-3, 6-4, 6-5, 6-6, 6-7, 6-8, 6-9, 6-11, 6-14, 6-15, 22-23, 6-10, 22-17, 22-19, 22-21, 22-25, 22-27
D-5249 7-23, 12-41, 7-45, 12-27, 12-29, 10-43, 13-9, 13-11, 14-3, 14-30, 14-42, 15-3, 15-15, 16-3, 16-28, 16-40, 17-3, 18-3
D-5254 7-37
D-5258 9-23, 7-37, 9-19, 9-21, 7-39, 22-47, 22-49, 22-51
D-5259 8-5, 8-9, 8-13, 7-34, 7-37, 7-51, 7-53, 7-55, 7-57, 7-59, 7-61, 9-7, 8-7, 8-11, 8-13, 8-15, 8-17, 8-19, 8-21, 9-23, 8-23, 19-7, 9-17, 9-22, 9-24, 19-35, 12-39, 12-41, , 10-46, 19-39, 22-7, 22-15, 22-13, 22-29, 22-33, 22-37, 22-41, 7-13, 9-15, 9-19, 9-21, 19-25, 9-25, 19-28, 22-31, 22-35, 7-39, 22-39, 7-45, 10-47, 22-4, 19-5, 22-9, 22-10, 22-17, 22-19, 22-21, 22-23, 22-25, 22-27, 19-45, 22-47, 19-47, 22-49, 19-55, 19-57, 19-63, 19-65, 19-67, 19-69, 19-71, 19-73
D-5260 1-4, 1-9, 12-19, 9-23, 7-37, 19-35, 12-39, 12-41, 19-37, 1-15, 1-11, 1-17, 7-39, 12-27, 19-23, 19-25, 19-28, 12-29, 19-45, 19-55, 19-63, 19-65, 1-9-67, 19-69, 22-11, 22-51
D-5261 12-23, 12-31
D-5265 9-23, 9-18, 9-19, 19-35, 9-21, 19-21, 19-25, 19-28, 19-45, 19-55, 19-63, 19-65, 19-67, 19-69, 22-46, 22-47, 22-49, 22-51
D-5267 1-13, 12-31, 7-49, 1-15, 1-17, 7-47
D-5272 1-9, 12-23, 12-39, 1-11, 12-31, 12-41
D-5273 1-13, 12-23, 4-25, 4-29, 4-3, 4-5, 1-15, 1-17, 1-19, 4-21, 12-31
D-5274 4-9, 4-11, 4-13, 4-14, 4-15, 4-25, 4-27, 4-29, 4-31, 7-49, 4-23, 7-45, 7-47, 19-21
D-5277 8-15, 8-23, 7-37, 7-51, 7-53, 7-57, 7-59, 7-61, 8-7, 8-11, 8-21, 8-24, 9-3, 10-3, 10-5, 22-7, 10-7, 10-9, 10-11, 19-12, 10-13, 7-14, 10-15, 12-19, 12-23, 10-25, 22-31, 22-35, 19-35, 19-37, 7-39, 22-39, 19-39, 12-41, 22-42, 7-53, 7-55, 14-59, 7-61, 9-11, 10-26, 10-27, 10-51, 10-53, 10-52, 10-53, 12-27, 12-29, 12-31, 14-61, 16-7, 15-23, 18-4, 17-4, 16-4, 18-7, 17-7, 17-10, 16-10, 19-11, 18-11, 19-21, 17-21, 19-23, 19-25, 19-28, 19-45, 19-47, 19-55, 19-57, 19-63, 19-65, 19-67, 19-69, 19-71, 19-73
D-5278 8-5, 8-9, 8-13, 7-34, 7-37, 7-51, 7-53, 7-55, 7-57, 7-59, 7-61, 9-7, 8-7, 8-11, 8-13, 8-15, 8-17, 8-19, 8-21, 8-23, 9-17, 12-19, 9-22, 9-24, 12-39, 12-41, 19-7, 19-35, 19-39, 22-7, 22-13, 22-15, 22-29, 22-33, 22-37, 22-41, 22-31, 22-35, 22-39, 7-45, 7-13, 9-15, 19-21, 19-25, 9-25, 12-27, 19-28, 12-29, 7-39, 10-52, 10-53, 19-23, 22-4, 22-5, 20-5, 19-5, 22-9, 22-10, 22-17, 22-19, 22-21, 22-23, 22-25, 22-27, 19-45, 19-47, 19-55, 19-57, 19-63, 19-65, 19-67, 19-69, 19-71, 19-73
D-5279 1-4, 7-55, 7-62, 7-37, 7-49, 7-51, 7-53, 7-57, 7-59, 7-61, 8-5, 8-9, 8-13, 8-

15, 8-17, 8-19, 7-19, 8-21, 9-23, 8-23, 7-25, 7-41, 7-43, , 11-2, 8-3, 8-5, 22-7, 8-7, 8-9, 8-11, 12-19, 8-21, 19-35, 19-37, 22-29, 1-5, 22-31, 22-33, 22-35, 22-37, 22-39, 22-41, 22-42, 4-3, 1-4, 4-5, 4-7, 4-9, 4-34, 7-39, 7-45, 7-47, 13-3, 13-5, 13-7, 11-7, 11-9, 13-15, 13-17, 13-19, 19-25, 10-26, 10-27, 19-28, 19-43, 19-45, 19-47, 19-55, 19-57, 19-67, 19-69, 20-5, 20-9, 20-11, 22-51, 19-63, 19-65, 19-71, 19-73, 19-77
D-5280 20-5
D-5488 1-4, 11-2, 12-6, 21-3, 12-7
D-5489 1-4, 2-33, 2-3, 2-5, 2-7, 19-12, 10-44, 10-45, 10-46, , 2-9, 2-11, 2-13, 2-15, 1-15, 2-17, 1-17, 2-19, 2-21, 1-21, 2-23, 1-23, 2-25, 2-27, 2-29, 2-31, 2-35, 2-37, 3-19, 3-15, 3-25, 4-3, 3-3, 3-5, 5-7, 3-7, 5-8, 3-9, 3-11, 3-13, 3-17, 3-21, 3-23, 3-27, 3-29, 3-31, 3-33, 4-34, 3-35, 3-37, 10-47, 10-43, 11-7, 11-9, 22-17, 22-19, 22-21, 22-23, 22-25, 22-27, 22-49, 19-77
D-5498 4-3, 4-21, 4-25, 4-29, 12-9, 12-15, 12-17, 12-25, 12-33, 12-35, 12-37
D-5499 6-12
D-5500 9-9, 9-17, 22-13, 22-15
D-5558 5-5, 12-9, 12-11, 12-15, 12-17, 12-25, 12-33, 12-35, 12-37
D-5579 12-19, 10-31, 10-33, 10-37, 10-39, 12-6, 12-17, 12-23, 12-27, 12-31, 12-21, 12-29, 19-50, 19-59
D-5590 11-2, 10-46, 11-3, 11-5, 11-7, 11-9, 10-47
D10553 5-3
D10747 8-5, 8-7, 8-9, 8-13, 8-15, 8-17, 8-19, 8-21, 8-23, 22-29, 22-31, 22-33, 22-35, 22-37, 22-39, 22-41
D10821 14-6, 14-9, 14-23, 14-27, 14-30, 14-39, 14-42, 15-6, 15-17, 16-6, 16-9, 16-21, 16-25, 16-28, 16-37, 16-40, 17-6, 17-9, 17-21, 18-6, 18-10, 18-19
D12714 19-12
D12820 1-19
D12821 2-33, 2-9, 2-11, 2-13, 1-15, 2-21, 2-23, 2-25, 2-35, 2-37
D12942 5-8
D14565 19-35, 7-37, 7-39, 22-39, 22-41, 7-3, 7-7, 8-3, 19-21, 19-23, 19-25, 12-27, 19-28, 12-29, 19-45, 19-55, 19-67, 19-69, 22-29, 22-31, 22-33, 22-35, 22-37, 22-39, 19-63, 19-65
D17585 13-5, 13-7, 13-13, 13-15, 13-17, 13-19
D17665 12-11, 12-17, 12-25, 12-35, 12-37
D17808 8-5, 8-9, 8-13, 8-15, 8-17, 8-19, 7-19, 8-21, 8-23, 7-23, 7-41, 7-43, 7-49, 7-51, 7-53, 7-55, 7-57, 7-59, 7-61, 7-27, 22-29, 22-31, 22-33, 22-35, 22-37, 22-39, 22-41, 7-45, 7-8, 7-9, 7-11, 7-13, 7-14, 7-31, 7-47
D17845 13-5, 13-7, 13-13, 13-15, 13-17, 13-19
D17946 8-5, 8-9, 8-13, 7-37, 22-7, 8-7, 8-11, 8-15, 8-17, 8-19, 8-21, 8-23, 22-29, 22-37, 22-31, 22-33, 22-35, 22-39, 22-41, 7-45, 22-5, 22-9, 7-13, 7-39, 19-45, 19-55, 19-63, 19-65, 19-67, 19-69
D17953 22-9
D17958 7-47

F

F-1767 1-4, 11-2, 12-39, 12-41
F-3009 4-19
F-3056 7-43, 7-45, 7-47, 7-49
F-3405 1-9, 12-19, 7-43, 1-4, 1-5, 1-13, 1-15, 1-19, 4-3, 4-5, 4-7, 1-11, 4-16, 1-17, 12-9, 12-11, 12-15, 12-17, 12-25, 12-33, 12-35, 12-37
F-3515 12-15, 12-33, 12-35
F-3867 22-17, 22-19, 22-21, 22-23, 22-25, 22-27
F-4340 1-3
F-4490 5-4, 5-5, 5-6, 5-7, 5-8, 12-25, 12-37
F-4543 , 5-5
F-4565 14-4, 14-7, 14-10, 14-14, 14-17, 14-20, 14-23, 14-25, 14-34, 14-37, 14-46, 14-49, 14-51, 16-13, 16-16, 16-19, 16-21, 16-23, 16-31, 16-34, 16-43, 16-46, 17-4, 17-7, 17-10, 17-13, 17-16, 17-19, 17-21, 17-23
F-5425 13-11
F-5679 14-25, 15-12, 15-19, 16-23, 18-16, 18-17, 18-21
F-5791 14-59, 15-23, 14-61
F10384 15-14, 22-23, 14-59, 14-27, 14-30, 14-61, 16-4, 16-7, 16-10, 16-13, 16-16, 16-19, 15-23, 16-25, 16-26, 16-28, 16-29, 16-32, 16-35, 16-38, 16-41, 16-44, 19-19, 16-47, 22-17, 22-19, 19-19, 22-21, 22-25, 22-27
F14658 14-61, 13-15
F14659 13-13, 13-17, 13-19
F24559 13-7

H

H-1790 7-11, 7-19, 7-23, 7-27, 7-31
H-4321 4-23, 4-27, 4-31
H-4410 13-7
H-4584 7-43, 7-45, 7-47, 7-49
H-4693 4-23, 4-27, 4-31
H-4696 9-7, 9-15
H10592 10-3, 10-5, 10-7, 10-9, 10-11, 10-13, 19-17, 20-3
H18242 12-9, 12-11, 12-15, 12-17
H18266 14-59, 14-23, 14-61, 13-15, 15-21
H18267 14-59, 14-21, 14-59, 13-15, 15-21
H18268 19-11
H18269 13-11, 14-27, 14-30, 14-33, 14-59, 14-61, 15-23, 14-36, 16-25, 16-28, 16-31, 16-34
H18746 18-14, 18-17, 14-59, 14-61, 16-4, 16-7, 16-10, 16-13, 16-16, 16-19, 15-23, 16-26, 16-29, 16-32, 14-53, 14-55, 17-4, 16-35, 16-38, 16-41, 16-44, 16-47, 17-7, 17-10, 17-13, 17-16, 17-19, 18-11, 19-19, 19-19, 22-23, 22-25, 22-27
H24393 14-13, 14-16, 14-19, 14-33, 14-36, 14-45, 14-48, 15-9, 15-12, 16-12, 16-15, 16-18, 16-31, 16-34, 16-43, 16-46, 17-12, 17-15, 17-18, 18-13, 18-16

J

J12190 1-9, 12-31, 1-11
J12281 12-15, 12-17, 12-25, 12-33, 12-35, 12-37
J12344 4-3, 4-5, 4-21

K

K-3830 1-15, 20-15, 1-17
K-5478 4-25, 4-29
K-5685 , 18-17, 16-7, 16-10, 14-53, 17-4, 16-4, 17-7, 16-16, 16-19, 17-10, 18-11, 17-16, 17-19
K-5806 13-3, 13-5, 13-7, 13-9, 13-15, 14-59, 14-4, 14-7, 14-10, 14-14, 14-17, 13-17, 13-19, 14-20, 14-27, 14-30, 14-34, 14-37, 14-39, 14-42, 14-46, 14-53, 14-55, 14-61, 15-4, 15-7, 15-10, 15-13, 15-17, 15-19, 15-23, 14-49, 16-3, 16-6, 16-9, 16-13, 16-16, 16-19, 16-23, 16-25, 16-28, 16-31, 16-34, 16-37, 16-40, 16-43, 16-46, 17-4, 17-7, 17-10, 17-13, 17-16, 17-19, 17-23, 18-4, 18-7, 18-11, 18-14, 18-17, 18-19, 18-21
K25314 7-53, 7-57, 7-59, 7-61
K25798 12-27, 12-29
K45685 19-41, 19-48, 19-49, 19-58, 19-74
K45686 19-26, 19-41, 19-48, 19-49, 19-58, 19-74
K50834 14-9, 15-9, 14-13, 18-13, 14-16, 18-16, 14-19, 14-23, 14-25, 14-3, 14-6, 14-

33, 14-36, 16-12, 16-15, 15-17, 16-18, 15-19, 16-21, 16-23, 14-45, 14-48, 17-3, 17-6, 17-9, 17-21, 17-23, 16-31, 16-34, 16-43, 16-46, 18-10, 17-12, 17-15, 17-18, 18-19, 18-21
K50961 , 15-9, 18-13, 18-16, 14-6, 18-10, 15-17, 18-19, 15-19, 18-21, 17-23, 16-23
K50993 13-17, 13-19
K53438 4-11, 4-13, 4-23, 4-27, 4-31, 19-21
K62145 4-7, 4-9, 4-11
K62977 19-55, 19-59, 19-63, 19-65, 19-67, 19-69, 19-77
K62978 , 13-3, 13-5, 13-15, 13-17, 14-4, 14-7, 13-7, 14-9, 14-14, 14-17, 13-19, 14-20, 14-23, 14-25, 14-27, 14-30, 14-33, 14-36, 14-39, 14-42, 16-3, 16-6, 16-12, 16-15, 16-18, 16-21, 16-23, 16-25, 16-28, 16-31, 16-34, 16-37, 16-40, 16-43, 14-45, 14-48, 17-4, 17-7, 17-13, 17-16, 17-19, 17-21, 17-23, 16--46, 19-55, 19-59, 19-63, 19-65, 19-67, 19-69
K62979 13-9, 13-11
K65885 ii

M

M-3388 1-6, 1-7, 19-7, 1-9, 1-13, 12-23, 2-33, 14-59, 2-11, 1-11, 2-13, 1-15, 1-17, 1-19, 2-21, 2-23, 2-25, 2-9, 2-35, 2-37, 12-9, 7-14, 12-15, 12-31, 4-32, 12-33, 4-34, 14-3, 14-6, 14-9, 12-11, 14-13, 14-16, 12-17, 14-19, 14-27, 14-30, 14-34, 12-35, 14-37, 14-39, 14-42, 14-61, 15-3, 15-6, 15-10, 15-23, 14-46, 14-49, 16-3, 16-6, 16-9, 16-13, 15-13, 16-15, 16-18, 16-25, 16-28, 16-31, 16-34, 16-37, 16-40, 16-43, 17-3, 17-6, 17-9, 17-15, 17-18, 16-46, 18-3, 18-6, 17-13, 18-14, 18-17, 19-5, 18-10, 19-11, 19-77, 20-3

N

N11457 , 22-15, 1-13, 22-13, 1-15, 9-3, 9-11, 1-17
N11461 4-23, 4-27, 4-31
N11470 19-15, 10-37, 10-39, 10-52, 10-53, 10-52
N11847 1-9, 22-13, 22-15, 1-11, 1-13, 1-15, 1-17, 9-3, 9-11
N11905 9-7, 9-9, 9-17, 10-3, 10-5, 10-7, 10-9, 10-11, 10-13, 9-15, 10-15, 10-17, 10-19, 10-21, 10-23, 10-25, 10-31, 10-33, 10-37, 10-51
N11906 , 9-13, 9-3, 10-3, 9-5, 10-5, 1-6, 1-7, 10-7, 10-9, 9-11, 10-11, 10-13, 22-10
N11907 9-7, 9-9, 9-17, 10-3, 10-5, 10-7, 10-9, 10-11, 10-13, 9-15, 10-15, 10-17, 10-19, 10-21, 10-23
N12882 10-3, 10-5, 10-7, 10-9, 10-11, 10-13, 10-15, 10-17, 10-19, 10-21, 10-23, 10-25
N13900 1-4, 1-5
N13901 14-4, 14-7, 14-9, 15-4, 15-7, 17-3, 17-6, 17-9, 18-3, 18-6, 18-10
N13951 6-14
N13952 6-14
N13953 6-13, 6-14
N13954 6-14
N13955 6-14
N13956 6-14
N13957 6-14
N13958 6-2, 6-3, 6-13, 6-14, 6-15
N13959 6-14
N13962 4-16, 6-14
N13967 22-29, 22-31, 22-37, 22-39
N13968 6-2, 6-3, 6-4, 6-11, 6-12, 6-13, 6-14, 6-15
N14009 12-9, 12-15, 12-33
N14262 8-11, 8-13, 8-15, 8-19, 22-33, 22-35, 22-41
N15022 10-31, 10-33, 10-37, 10-39
N15049 4-9
N15096 10-31, 10-37
N15097 , 10-3, 10-5, 10-7, 5-7, 19-18, 10-31, 10-33, 10-37
N15098 5-8, 10-3, 10-5, 10-7, 10-9, 10-11, 19-12, 10-13, 10-15, 19-17, 10-17, 10-21, 10-25, 10-31, 10-33, 10-37, 7-39, 10-39, 10-43, 20-5
N15102 10-31, 10-33
N15107 10-31, 10-33
N15112 20-9, 20-11
N15135 10-29, 10-31, 10-33, 10-35, 10-37, 10-39
N15559 4-27, 4-31, 7-49, 9-23, 22-51, 4-23, 12-27, 7-47, 14-23, 12-29, 14-30, 14-42, 15-17, 16-21, 16-28, 16-40, 17-21, 18-19
N15590 14-6, 18-6, 14-9, 15-3, 14-3, 16-3, 16-6, 15-6, 16-7, 16-9, 16-10, 17-3, 17-4, 16-4, 17-6, 17-7, 17-9, 17-10, 17-21, 18-3, 18-4, 18-7, 18-10, 18-11
N15594 10-31, 10-33
N15595 10-31, 10-33
N15716 , 10-45, 10-46, 9-5, 22-13, 9-13, 9-3, 1-4, 1-5, 9-11, 10-44, 22-15, 10-47
N15756 12-6, 12-7, 13-5, 13-7, 13-9, 13-15, 13-17, 13-19
N15757 12-9, 12-11, 12-15, 12-17, 12-25, 12-33, 12-35, 12-37
N15990 13-17, 14-13, 14-16, 14-19, 14-25, 15-9, 15-12, 15-19, 16-12, 16-15, 16-18, 16-23, 17-12, 17-15, 17-18, 17-23, 18-13, 18-14, 18-16, 18-17, 18-21
N15991 14-6, 18-6, 14-9, 15-3, 14-3, 15-9, 15-12, 15-17, 15-19, 16-3, 16-6, 15-6, 17-3, 17-6, 17-9, 16-9, 18-3, 18-10, 18-13, 18-16, 18-19, 18-21
N16028 4-16
N16030 4-16
N16032 4-16
N16113 7-51, 7-55, 7-59
N16143 13-5, 13-7, 13-11, 13-13, 13-15, 14-3, 14-6, 14-9, 13-17, 13-19, 14-23, 14-27, 14-30, 16-6, 16-9, 16-21, 16-25, 16-28, 16-37, 14-39, 14-42, 17-6, 17-9, 17-21, 16-40
N16156 7-23, 7-45
N16170 , 1-4, 1-5
N16226 5-3, 5-7, 5-8
N16257 , 14-3, 14-6, 14-9, 18-13, 18-16, 14-27, 14-30, 16-9, 16-12, 16-15, 15-15, 16-18, 16-25, 14-39, 14-42, 17-9, 16-28, 16-37, 16-40, 17-12, 17-15, 17-18
N16346 18-6, 12-27, 13-9, 12-29, 14-3, 14-6, 14-9, 13-11, 14-23, 14-27, 14-30, 14-33, 14-36, 14-39, 14-42, 14-45, 15-3, 15-17, 14-48, 16-3, 16-6, 15-6, 16-9, 16-21, 16-25, 16-28, 16-31, 16-34, 16-37, 16-40, 16-43, 17-3, 17-6, 17-9, 17-21, 16-46, 18-3, 18-10, 18-19
N16347 12-27, 12-29, 13-9, 13-11, 14-27, 14-30, 14-39, 14-42, 16-25, 16-28, 16-37, 16-40
N16359 , 13-9, 14-13, 14-16, 14-19, 14-25, 14-51, 15-3, 15-12, 14-53, 14-55, 15-6, 15-9, 16-12, 16-15, 15-17, 16-18, 15-19, 17-12, 17-15, 17-18, 17-23, 16-23, 18-3, 18-6, 18-13, 18-16, 18-19, 18-21
N16388 18-6, 15-3, 15-9, 13-9, 15-12, 15-17, 15-19, 18-3, 15-6, 18-13, 18-16, 18-19, 18-21
N16399 15-3, 15-6, 15-9, 15-12, 15-17, 15-19, 18-3, 18-6, 18-13, 18-16, 18-19, 18-21
N16471 19-5, 19-7
N16504 10-33, 10-39
N16507 10-33, 10-39
N16563 19-7, 19-5
N16564 19-7, 19-45, 19-50, 19-55, 19-59, 19-63, 19-65, 19-67, 19-69, 19-5
N16608 18-16, 14-4, 5-6, 14-7, 14-9, 14-13, 14-16, 14-19, 14-33, 14-36, 14-45, 15-4, 15-7, 15-9, 15-12, 14-48, 16-12, 16-15, 15-15, 16-18, 16-31, 16-34, 16-43, 17-3, 17-6, 17-9, 17-12, 17-15, 17-

18, 16-46, 18-3, 18-6, 18-10, 18-13
N16621 14-3, 14-6, 18-6, 14-9, 14-13, 14-16, 14-19, 14-23, 14-25, 15-3, 15-9, 15-12, 15-17, 15-19, 14-30, 16-3, 16-6, 15-6, 16-9, 16-12, 16-15, 16-18, 16-23, 17-3, 17-6, 17-9, 17-12, 17-15, 17-18, 17-21, 16-21, 17-23, 18-3, 18-10, 18-13, 18-16, 18-19, 18-21
N16689 10-33, 10-39
N16698 19-12
N16716 7-37, 7-39
N16853 , 8-15, 8-21, 8-23, 22-29, 22-31, 22-33, 22-35, 22-37, 22-41, 22-39, 7-51, 7-53, 7-55, 7-57, 7-59, 8-9, 8-13, 8-17, 8-19, 7-59, 7-61
N16860 7-45
N16861 7-45, 7-49
N16862 7-14, 19-10, 19-11
N16969 7-53
N17217 12-25, 12-37
N19000 9-7, 9-9, 22-15, 22-13, 9-15
N19023 11-5, 18-7, 11-9, 14-10, 14-14, 14-17, 18-17, 14-20, 14-28, 14-31, 14-40, 14-43, 16-3, 16-7, 16-10, 15-10, 16-13, 15-13, 16-16, 16-19, 16-26, 16-29, 16-32, 16-35, 16-38, 16-41, 17-7, 17-10, 17-16, 17-19, 16-44, 16-47, 18-4, 17-4, 18-11, 17-13, 18-14
N19031 14-14, 14-17, 18-17, 15-10, 14-20, 16-13, 15-13, 16-16, 16-19, 16-32, 16-35, 16-44, 17-16, 17-19, 16-47, 17-13, 18-14
N19051 5-3
N19054 5-3
N19055 5-3
N19064 7-39
N19065 5-3
N19155 9-5, 9-13, 14-13, 14-16, 18-16, 14-19, 14-33, 14-36, 14-45, 15-12, 14-48, 15-9, 16-12, 16-15, 16-18, 16-31, 16-34, 16-43, 17-12, 17-15, 16-46, 18-13, 17-18, 22-11
N19166 4-3, 6-12
N19167 6-12
N19168 6-12
N19169 6-12
N19170 6-12
N19171 6-12
N19172 6-12
N19196 5-3
N19203 5-3
N19221 7-43, 7-45
N19224 7-43, 7-45, 7-47, 7-49
N19230 4-9, 4-14, 4-15, 7-43, 7-45
N19237 7-43, 7-45, 7-47, 7-49
N19258 7-51, 7-53, 7-55, 7-57, 7-59, 7-61, 22-33, 22-35
N19261 7-13, 7-23, 7-45, 7-47, 7-49
N19269 9-3, 22-7, 22-9, 9-11
N19277 ii, 9-3, 9-11
N19283 7-19, 7-27, 7-31, 7-51, 7-53, 7-55, 7-57, 7-59, 7-61, 12-31
N19288 7-11, 7-19, 7-23, 7-27, 7-31, 7-41, 7-53
N19307 , 5-7, 4-7, 5-8
N19335 18-3, 14-3, 15-3, 17-3, 16-3
N19336 , 14-59, 14-3, 14-6, 18-6, 14-9, 14-21, 14-27, 14-30, 14-33, 14-36, 14-39, 14-42, 14-51, 14-61, 15-3, 15-23, 14-45, 14-48, 16-3, 16-6, 15-6, 16-9, 16-25, 16-28, 16-31, 16-34, 16-37, 16-40, 16-43, 17-3, 17-6, 17-9, 16-46, 18-3, 18-10
N19337 , 14-59, 14-3, 14-6, 14-9, 14-13, 14-16, 14-19, 14-21, 14-25, 14-51, 14-61, 15-3, 15-6, 15-9, 15-12, 15-19, 15-23, 16-3, 16-4, 16-6, 16-7, 16-9, 16-10, 16-12, 16-13, 16-15, 16-16, 16-18, 16-19, 16-23, 17-3, 17-4, 17-6, 17-7, 17-9, 17-10, 17-12, 17-13, 17-15, 17-16, 17-18, 17-19, 17-21, 17-23, 18-3, 18-4, 18-6, 18-7, 18-10, 18-11, 18-13, 18-14, 18-16, 18-17, 18-21
N19338 , 14-59, 18-6, 14-9, 15-9, 18-16, 14-23, 14-61, 15-3, 14-3, 14-6, 15-17, 15-19, 14-51, 16-3, 16-6, 15-6, 15-23, 17-3, 17-6, 16-9, 17-21, 16-21, 18-3, 17-9, 18-10, 18-13, 18-19, 18-21
N19348 14-53
N19366 5-6
N19406 10-31, 10-33
N19428 10-3, 10-5, 10-7, 10-9, 10-11, 10-13, 10-15, 10-17, 10-19, 10-21, 10-23, 10-25
N19434 18-6, 14-23, 15-3, 14-9, 15-17, 15-6, 16-9, 17-21, 16-21, 18-3, 17-9, 18-10, 18-19
N19439 12-25, 12-37
N19448 , 4-3, 10-3, 10-5, 10-7, 10-9, 10-11, 10-13, 10-15, 10-17, 10-21
N19449 9-9, 9-17, 10-3, 10-5, 10-7, 10-9, 10-11, 22-13, 10-13, 22-15, 10-15, 10-17, 10-19, 10-21, 10-23, 10-25
N19458 14-4, 14-7, 14-9, 14-13, 14-16, 18-16, 14-19, 14-33, 14-36, 14-45, 15-4, 15-7, 15-12, 14-48, 15-9, 16-12, 16-15, 16-18, 16-31, 16-34, 16-43, 17-3, 17-6, 17-9, 17-12, 17-15, 17-18, 16-46, 18-3, 18-6, 18-11, 18-13
N19459 12-6, 12-7, 13-13, 13-15, 13-17, 13-19
N19470 7-14, 19-11
N19475 14-3, 14-6, 18-6, 14-9, 14-27, 14-30, 14-39, 15-3, 14-42, 16-3, 16-6, 15-6, 16-9, 16-25, 16-28, 16-37, 17-3, 17-6, 17-9, 16-40, 18-3, 18-10
N19484 4-16, 6-12, 6-14
N19502 19-10, 19-11
N19531 10-3, 10-5, 10-7, 10-9, 10-11, 10-13, 10-15, 10-17, 10-21, 10-23, 10-31, 10-33, 10-37, 10-39
N19547 14-53
N19549 14-13, 14-16, 14-19, 14-25, 16-12, 16-15, 16-18, 17-12, 17-15, 17-18
N19563 9-18, 9-19, 9-23, 12-31, 12-21, 9-21, 12-23, 22-46, 22-47, 22-49, 22-51
N19577 7-11, 7-13, 7-19, 7-23, 7-27, 7-31, 7-37, 7-39, 7-41, 7-43, 7-45, 7-47, 7-49, 7-51, 7-53, 7-55, 7-57, 7-59, 7-61
N19578 18-6, 15-9, 15-12, 15-17, 15-19, 15-6, 18-3, 18-10, 18-13, 18-16, 18-19, 18-21
N19586 6-12
N19599 19-5, 19-7
N19678 10-40, 19-43, 19-45
N19706 1-9, 7-19, 8-5, 8-9, 8-13, 8-15, 8-17, 8-19, 8-21, 8-23, 7-23, 7-41, 7-43, 7-49, 7-51, 7-53, 7-55, 7-57, 7-59, 7-61, 1-11, 22-29, 22-31, 22-33, 22-35, 22-37, 22-39, 22-41, 7-45, 7-8, 7-9, 7-11, 7-13, 7-27, 7-31, 7-47
N19717 , 4-3, 10-3, 10-5, 10-7, 10-9, 10-11, 10-13, 10-15, 10-17, 10-21
N19723 , 10-41, 22-23, 7-39, 12-3, 19-25, 19-28, 19-33, 19-43, 19-53, 22-17, 22-19, 22-21, 22-25, 22-27, 19-61
N19736 12-9, 12-11, 12-15, 12-17
N19769 10-40, 10-41, 10-43
N19770 10-40, 10-41, 10-43
N21055 8-15, 7-51, 8-11, 8-21, 8-23, 22-31, 22-35, 22-39, 7-53, 10-43, 7-55, 7-61
N21057 10-40, 10-41
N21060 10-40, 10-41, 10-43
N21061 10-40, 10-41, 10-43
N21080 10-40, 10-41, 10-43
N21189 15-9, 18-13, 18-16, 18-17, 14-19, 14-25, 16-12, 14-13, 14-16, 15-19, 17-12, 17-13, 17-15, 16-15, 16-18, 17-23, 16-23, 18-14, 17-16, 17-18, 17-19, 18-21
N21198 9-25
N21266 12-19, 12-27, 12-29, 12-39, 12-41

N21287 7-14, 19-11
N21289 14-3, 14-6, 14-9, 15-3, 15-6, 16-3, 16-6, 16-9, 17-3, 17-6, 17-9, 17-21, 18-3, 18-6, 18-10
N21602 9-3, 22-7, 22-9, 9-11
N21604 9-3, 9-11
N21612 22-9
N21632 14-3, 14-6, 14-9, 14-23, 14-53, 14-55, 15-3, 15-6, 15-17, 16-3, 16-6, 16-9, 16-21, 17-3, 17-6, 17-9, 17-21, 18-3, 18-6, 18-10, 18-19
N21658 12-31
N21690 14-3, 14-6, 14-9, 15-3, 15-6, 17-3, 17-6, 17-9, 18-3, 18-6, 18-10
N21691 14-3, 14-6, 14-9, 15-4, 15-7, 15-15, 17-3, 17-6, 17-9, 18-3, 18-6, 18-10
N21712 4-16
N21728 4-21, 4-23, 4-25, 4-27, 4-29, 4-31, 6-13
N22777 7-6, 7-14, 8-2, 22-43
N22778 , 9-23, 10-46, 22-7, 22-15, 20-15, 9-17, 12-31, 22-13, 1-15, 8-2, 7-6, 9-11, 7-14, 1-17, 9-19, 9-3, 9-21, 10-47, 12-20, 12-23, 22-5, 22-6, 22-9, 12-21, 22-43, 22-47, 22-49, 19-50, 22-51, 19-59
N22793 5-3
N22794 5-3
N22797 5-3
N22800 5-3
N22822 10-40
N24302 19-8
N24308 10-40, 10-41, 10-43
N24309 10-40
N24311 10-40
N24391 19-8
N24396 , 4-3, 10-3, 10-5, 10-7, 10-9, 10-11, 10-13, 10-15, 10-17, 10-21, 10-23, 10-31, 10-33, 10-37, 10-51
N24583 19-11
N25457 14-27, 14-30, 14-34, 14-37, 14-39, 7-39, 14-42, 14-46, 16-25, 16-28, 16-32, 16-35, 16-37, 16-40, 16-44, 14-49, 22-17, 22-19, 22-21, 22-23, 22-25, 22-27, 16-47
N25507 11-10
N25508 11-10
N25611 6-2, 6-3, 6-4, 6-5, 6-13, 6-15
N25644 15-9, 18-13, 18-16, 15-19, 18-21
N25754 14-3, 14-6, 14-9, 14-23, 14-27, 14-30, 14-39, 14-42, 15-3, 15-6, 15-17, 16-3, 16-6, 16-9, 16-21, 16-25, 16-28, 16-37, 16-40, 17-3, 17-6, 17-9, 17-21, 18-3, 18-6, 18-10, 18-19
N25773 10-40
N27011 19-10, 19-11
N27012 19-10, 19-11
N27119 19-9
N27329 10-31, 10-33, 10-37, 10-39
N27350 7-51, 7-53, 7-55, 7-57, 7-59, 7-61, 9-3, 22-7, 9-7, 22-15, 22-9, 9-11, 9-15
N27360 9-25
N27370 7-51, 7-53, 7-55, 7-57, 7-59, 7-61
N27395 7-5, 7-34, 7-37, 7-39, 7-51, 7-53, 7-55, 7-57, 7-59, 7-61
N27400 7-53
N27403 7-51, 7-53, 7-55, 7-57, 7-59, 7-61
N27404 7-51, 7-53, 7-55, 7-57, 7-59, 7-61
N27405 7-51, 7-53, 7-55, 7-57, 7-59, 7-61
N27406 7-51, 7-53, 7-55, 7-57, 7-59, 7-61
N27410 7-45, 7-47, 7-49, 7-53, 7-57, 7-59, 7-61
N27412 7-4, 7-5
N27413 7-4, 7-5
N27414 7-4
N27415 7-4, 7-5, 7-34
N27416 7-4
N27417 7-4, 7-5
N27418 7-4
N27419 7-4
N27420 7-4, 7-5, 7-34, 7-53, 7-57, 7-59
N27421 7-4
N27422 7-4
N27423 7-4
N27424 7-4
N27425 7-4, 7-5, 7-34, 7-51, 7-53, 7-55, 7-57, 7-59, 7-61
N27426 7-4
N27427 7-4
N27428 7-4
N27429 7-4
N27430 7-4
N27431 7-4, 7-51, 7-55
N27432 7-4, 7-57, 7-61
N27433 7-4, 7-53
N27435 7-4, 7-59
N27438 7-4
N27440 7-4
N27444 7-4
N27445 7-4, 7-37, 7-39
N27589 14-3, 14-6, 14-9, 15-4, 15-7, 17-3, 17-6, 17-9, 18-3, 18-6, 18-10
N27601 18-6, 14-9, 14-17, 14-6, 16-6, 15-6, 16-9, 17-6, 17-9, 16-15, 18-10, 17-16
N27609 19-7, 19-5
N27613 19-8, 19-6, 19-25, 19-28, 19-35, 19-37, 19-39, 19-10, 19-11, 20-9, 20-12
N27614 19-8, 19-6, 19-9, 19-25, 19-28, 19-35, 19-37, 19-39, 20-9, 19-10, 19-11, 20-5, 20-12
N27615 19-8, 19-10, 20-5, 19-11
N27616 19-5, 19-7
N27617 19-5, 19-7
N27618 19-5, 19-7
N27619 19-5, 19-7
N27621 19-5, 19-7
N27624 19-5, 19-7
N27625 19-7, 19-5
N27847 19-11
N27848 19-11
N28332 12-31
N28361 12-23
N28396 10-41
N28397 10-41
N28398 10-41
N28399 10-41
N28825 10-48
N28997 4-7, 4-32, 5-9
N28998 5-9
N29048 12-20, 20-5
N29147 19-8
N29148 19-8, 20-3, 20-9, 20-12
N29149 19-8, 20-9, 20-12
N29150 19-8, 20-3, 20-9, 20-12
N29151 19-8, 19-6, 21-3, 21-5
N29152 19-8, 19-6, 19-25, 19-28
N29153 19-8, 19-6, 19-25, 19-28
N29200 7-9, 7-34, 7-51
N29296 19-35, 19-21, 19-25, 19-28, 19-37, 19-45, 19-55, 19-63, 19-65, 19-67, 19-69
N29319 , 7-39, 8-5, 8-7, 8-9, 8-11, 8-13, 8-15, 8-17, 8-19, 8-21, 8-23, 8-25, 7-37, 12-23, 8-25, 12-31, 12-56, 13-7, 13-11, 13-23, 12-56, 14-51, 14-53, 14-55, 16-4, 16-7, 16-10, 16-13, 16-16, 16-19, 16-49, 17-4, 17-7, 17-10, 17-13, 17-16, 17-19, 18-4, 18-7, 18-11, 18-14, 18-17, 22-29, 22-31, 22-33, 22-35, 22-37, 22-39, 22-41, 22-52
N29324 17-24, 18-22, 18-23
N29325 16-4, 16-7, 16-10, 16-13, 16-16, 16-19, 17-24, 18-22, 18-23
N29328 17-24, 18-22, 18-23
N29329 17-24, 18-22, 18-23
N29331 17-24, 18-22, 18-23
N29334 19-12
N29338 8-5, 8-7, 8-9, 8-13, 8-15, 8-17, 8-19, 8-21, 8-23, 22-29, 22-31, 22-33, 22-35, 22-37, 22-39, 22-41
N29340 8-5, 8-7, 8-9, 8-13, 8-15, 8-17, 8-19, 8-21, 8-23, 22-29, 22-31, 22-33, 22-35, 22-37, 22-39, 22-41
N29341 8-5, 8-7, 8-9, 8-13, 8-15, 8-17, 8-19, 8-21, 8-23, 22-29, 22-31, 22-33, 22-35, 22-37, 22-39, 22-41
N29342 8-5, 8-7, 8-9, 8-13, 8-15, 8-17, 8-19, 8-21, 8-23
N29355 7-37, 7-39
N29356 15-9, 14-59, 15-11, 15-12, 18-13, 18-16, 14-61, 16-4, 16-7, 16-10, 16-13, 16-16, 15-19, 15-23, 17-4, 17-7, 17-10, 17-13, 16-19, 17-23, 16-

23, 18-4, 18-7, 18-11, 18-14, 17-16, 18-17, 17-19, 18-21
N29358 13-5, 13-7, 18-7, 13-9, 13-13, 14-59, 13-11, 14-13, 13-15, 14-16, 13-17, 14-19, 13-19, 14-25, 14-30, 14-33, 14-61, 14-36, 14-45, 16-12, 16-15, 16-18, 16-23, 15-23, 16-28, 16-31, 16-34, 14-48, 17-4, 17-7, 17-10, 17-12, 17-13, 17-15, 17-16, 17-23, 16-43, 16-46, 18-4, 18-14, 18-17, 17-18, 17-19, 18-11, 22-17, 22-19, 22-21, 22-23, 22-25, 22-27
N29362 , 18-14, 17-4, 17-13
N29363 , 17-4, 18-14, 18-17, 17-7, 17-13, 17-16, 17-19
N29364 , 17-4, 17-7, 18-14, 18-17, 17-10, 18-11, 17-13, 17-16, 17-19
N29365 18-7, 14-27, 14-33, 14-36, 14-39, 22-45, 16-25, 16-28, 16-31, 16-34, 16-37, 14-42, 14-45, 14-48, 17-4, 17-7, 17-10, 16-40, 16-43, 16-46, 18-4, 17-13, 18-14, 17-16, 18-17, 17-19, 18-11, 22-17, 22-19, 22-21, 22-23, 22-25, 22-27
N29367 8-5
N29368 8-5, 8-7, 8-9, 8-11, 8-13, 8-15, 8-19, 22-41
N29371 8-5, 8-7, 8-9, 8-13, 8-15, 8-17, 8-19, 8-21, 8-23, 22-29, 22-31, 22-33, 22-35, 22-37, 22-39, 22-41
N29375 8-5, 8-9, 7-37, 8-5, 8-11, 8-13, 8-15, 8-17, 8-19, 8-21, 8-23, 22-29, 22-37, 22-31, 22-33, 22-35, 7-39, 22-39, 22-41
N29382 19-10, 19-11
N29383 19-10
N29384 19-8, 19-6, 19-25, 19-28, 19-35, 20-3, 20-9, 19-9, 19-37, 20-12
N29385 19-8, 19-6, 19-25, 19-28, 19-35, 20-9, 19-9, 19-37, 20-3, 20-12
N29398 22-33, 22-35, 22-41
N29399 7-19, 7-23, 22-33, 22-35, 22-41, 7-11, 7-27, 7-31
N29486 19-45, 19-50, 19-55, 19-59, 19-63, 19-65, 19-67, 19-69
N29696 19-35
N30594 19-10, 19-11
N31012 10-29, 10-35
N31014 10-29, 10-35
N31016 22-7, 10-29, 10-35
N31040 1-15, 1-17, 7-14, 19-11
N31049 19-12
N31066 7-11, 7-19, 7-23, 7-27, 7-31, 7-41, 7-53
N31087 ii
N31096 13-9, 13-11
N31160 10-29, 10-35
N31161 10-29, 10-35
N31162 10-29, 10-35
N31163 22-7, 10-29, 10-35
N31165 10-29, 10-35
N31171 10-29, 10-35
N31172 10-29, 10-35
N31173 10-29, 10-35
N31174 22-7, 10-29, 10-35
N31177 10-29
N31178 10-29
N31179 10-29
N31180 10-29
N31187 10-29, 10-31, 10-33
N31188 10-29, 10-31, 10-33
N31189 10-29, 10-31, 10-33
N31190 10-29, 10-31, 10-33
N31209 19-12
N31603 14-3, 14-6, 14-9, 14-13, 14-16, 14-19, 14-25, 15-3, 15-6, 15-9, 15-12, 15-19, 16-3, 16-6, 16-9, 16-12, 16-15, 16-18, 16-23, 17-3, 17-6, 17-9, 17-12, 17-15, 17-18, 17-23, 18-3, 18-6, 18-10, 18-13, 18-16, 18-21
N31790 19-5, 19-7
N32001 20-5
N32062 19-17
N32101 19-17, 19-18
N32102 19-17, 19-18
N32104 19-17
N32105 19-17
N32106 19-17
N32107 19-17
N32110 19-17
N32456 19-10
N32457 19-10, 19-17, 19-18, 19-19
N32458 19-10, 19-11
N32459 19-11
N32460 19-10, 19-11
N32470 19-5, 19-7
N32471 19-5, 19-7
N32481 19-17, 19-18
N32482 19-17, 19-18, 19-19
N32483 19-17, 19-18, 19-19
N32491 19-9
N32492 19-9
N32494 19-9
N32735 5-9
N32769 9-5, 9-13, 22-11
N32772 19-17
N32774 19-17
N32775 19-17
N32776 19-17
N32779 19-11
N32780 19-11
N32781 19-17
N32782 19-17
N32785 19-17
N32786 19-17
N32866 7-41, 7-43
N32871 4-3, 4-5, 4-7, 4-29, 6-2, 6-4, 6-5, 6-15
N32997 7-43, 7-45
N33243 6-2, 6-4, 6-5, 6-15
N33244 6-2, 6-3, 6-4, 6-5, 6-6, 6-7, 6-15
N33245 6-2, 6-4, 6-5, 6-15
N33547 6-2, 6-4, 6-5, 6-15
N33548 6-2, 6-4, 6-5, 6-15
N33549 6-2, 6-4, 6-5, 6-15
N33550 6-2, 6-4, 6-5, 6-15
N33551 6-2, 6-4, 6-5, 6-15
N33552 6-2, 6-4, 6-5, 6-15
N33554 6-2, 6-4, 6-5, 6-15
N33834 , 4-3, 10-3, 10-5, 10-7, 10-9, 10-11
N34024 19-12
N34025 10-43
N34177 19-9
N34366 15-14
N34423 4-23, 4-27, 4-31
N34463 20-5, 20-7
N34475 1-15, 20-15, 1-17
N34476 20-5
N34477 20-5
N34478 20-5
N34488 14-3, 14-6, 14-9, 14-13, 14-16, 14-19, 14-23, 14-33, 14-36, 14-45, 14-48, 15-3, 15-6, 15-9, 15-12, 15-15, 15-17, 15-19, 16-12, 16-15, 16-18, 16-21, 16-23, 16-31, 16-34, 16-43, 16-46, 17-3, 17-6, 17-9, 17-12, 17-15, 17-18, 17-21, 17-23, 18-3, 18-6, 18-10, 18-13, 18-16, 18-19, 18-21
N34494 13-3, 13-5, 13-7, 13-9, 13-11, 13-15, 13-17, 13-19
N34498 4-33, 14-3, 14-6, 14-9, 14-13, 15-14, 14-16, 14-19, 14-21, 14-23, 14-25, 14-28, 14-31, 14-33, 14-36, 14-40, 14-43, 14-45, 14-62, 15-3, 15-6, 15-9, 15-12, 15-15, 15-17, 15-19, 14-48, 16-3, 16-6, 16-9, 16-12, 16-15, 16-18, 16-21, 16-23, 16-26, 16-29, 16-31, 16-34, 16-38, 16-41, 16-43, 16-46, 17-3, 17-6, 17-9, 17-12, 17-15, 17-18, 17-21, 17-23, 18-3, 18-6, 18-10, 18-13, 18-16, 18-19, 18-21, 22-17, 22-19, 22-21
N34499 14-3, 14-6, 18-6, 14-9, 14-53, 15-3, 16-3, 16-6, 15-6, 17-3, 17-6, 17-9, 16-9, 17-21, 18-3, 18-10
N34503 4-33, 13-4, 13-15, 13-17, 13-19, 14-21
N34505 12-19, 14-23, 13-3, 13-5, 13-7, 13-15, 14-3, 14-4, 14-6, 14-9, 14-13, 14-16, 13-17, 14-19, 13-19, 14-23, 14-25, 14-27, 14-30, 14-33, 14-36, 14-39, 14-42, 14-45, 16-3, 16-4, 16-6, 16-7, 16-9, 16-10, 16-12, 16-13, 16-15, 16-16, 16-18, 16-19, 16-21, 16-23, 16-25, 16-26, 16-28, 16-29, 16-31, 16-32, 16-34, 16-35, 16-37, 16-38, 16-40, 16-41, 16-43, 16-44, 16-46, 14-48, 17-3, 17-4, 17-6, 17-9, 17-12, 17-15, 17-18, 17-21, 17-23, 16-47
N34576 14-3, 14-6, 14-9, 14-13, 14-16, 14-19, 14-25, 14-28, 14-31, 14-33, 14-36, 14-40, 14-43, 14-45, 14-48, 15-3, 15-6, 15-9, 15-12, 15-17, 15-19, 16-3, 16-6, 16-

9, 16-12, 16-15, 16-18, 16-23, 16-26, 16-29, 16-31, 16-34, 16-38, 16-41, 16-43, 16-46, 17-3, 17-6, 17-9, 17-12, 17-15, 17-18, 17-23, 18-3, 18-6, 18-10, 18-13, 18-16, 18-19, 18-21
N34577 14-3, 14-6, 14-9, 14-13, 14-16, 14-19, 14-25, 14-28, 14-31, 14-33, 14-36, 14-40, 14-43, 14-45, 14-48, 15-3, 15-6, 15-9, 15-12, 15-17, 15-19, 16-3, 16-6, 16-9, 16-12, 16-15, 16-18, 16-23, 16-26, 16-29, 16-31, 16-34, 16-38, 16-41, 16-43, 16-46, 17-3, 17-6, 17-9, 17-12, 17-15, 17-18, 17-23, 18-3, 18-6, 18-10, 18-13, 18-16, 18-19, 18-21
N34578 14-3, 14-6, 14-9, 14-13, 14-16, 14-19, 14-25, 14-28, 14-31, 14-33, 14-36, 14-40, 14-43, 14-45, 14-48, 15-3, 15-6, 15-9, 15-12, 15-17, 15-19, 16-3, 16-6, 16-9, 16-12, 16-15, 16-18, 16-23, 16-26, 16-29, 16-31, 16-34, 16-38, 16-41, 16-43, 16-46, 17-3, 17-6, 17-9, 17-12, 17-15, 17-18, 17-23, 18-3, 18-6, 18-10, 18-13, 18-16, 18-19, 18-21
N34620 , 14-13, 14-16, 14-19, 14-33, 14-36, 14-45, 15-9, 15-12, 15-17, 15-19, 14-48, 16-12, 16-13, 16-15, 15-15, 16-16, 16-18, 16-19, 16-23, 16-31, 16-34, 16-43, 17-12, 17-13, 17-15, 17-16, 17-18, 17-23, 16-46, 18-13, 18-16, 17-19, 18-21, 22-19, 18-19, 22-21
N34644 13-4, 13-15, 13-17, 13-19
N34646 13-3, 13-5, 13-7, 13-9, 13-11, 13-15, 13-17, 13-19, 14-4, 14-7, 14-10, 14-14, 14-17, 14-20, 14-23, 14-25, 14-34, 14-37, 14-46, 14-49, 16-13, 16-16, 16-19, 16-21, 16-23, 16-31, 16-34, 16-43, 16-46, 17-4, 17-7, 17-10, 17-13, 17-16, 17-19, 17-21, 17-23
N34658 20-5
N34681 20-9, 20-11
N34682 20-9, 20-11
N34687 20-3, 20-5, 20-9, 20-12
N34688 20-3, 20-5, 20-9, 20-12
N34689 20-5, 20-9, 20-12
N34690 20-5, 20-9, 20-12
N34691 20-3, 20-5, 20-9, 20-12
N34692 20-3, 20-5, 20-9, 20-12
N34696 20-9, 20-12
N34698 20-9, 20-12
N34700 20-9, 20-12
N34703 20-9, 20-12
N34709 20-3, 20-9, 20-12
N34715 19-12, 20-9, 20-11
N34731 19-17
N34791 19-12
N34792 19-12
N34793 19-12
N34794 19-12
N34795 19-12
N34799 19-25, 19-28, 19-35, 19-45, 19-55, 19-63, 19-65, 19-67, 19-69
N34841 19-12
N34961 7-51, 7-53, 7-55, 7-57, 7-59, 7-61, 7-62, , 8-11, 8-15, 8-21, 8-23, 22-31, 22-35, 22-39, 19-21, 19-23, 7-35, 22-42
N34989 19-12
N35619 19-17
N35620 19-17
N36018 7-41
N36019 22-23, 22-25, 22-27, 22-15, 22-17, 22-19, 22-21, 19-25, 19-28
N36021 20-16
N36022 20-16
N36023 20-16
N36039 7-41, 4-5, 7-43
N36043 15-4, 15-7, 15-17, 18-4, 18-7, 18-11, 18-19
N36045 15-4, 15-7, 15-17, 18-4, 18-7, 18-11, 18-19
N36106 9-3, 9-11
N36110 9-3, 9-11
N36114 9-7, 22-15, 9-15
N36120 9-18, 9-19, 9-21, 9-23, 22-46, 22-47, 22-49
N36128 12-19, 12-27, 12-41, 12-29
N36130 9-5, 9-13
N36137 4-29
N36138 , 6-15, 4-29
N36140 6-2, 6-15
N36143 9-3, 9-11, 20-9, 20-11
N36146 10-3, 10-5, 10-7, 10-9, 10-11, 10-13
N36148 10-3, 10-5, 10-7, 10-9, 10-11, 19-12, 10-13, 10-23, 10-51
N36162 5-3
N36170 4-16
N36171 4-16
N36178 , 4-3, 4-16
N36186 4-16
N36199 19-7, 19-5
N36200 19-10
N36206 7-51, 7-53, 7-55, 7-57, 7-59, 7-61
N36225 4-3, 4-5, 4-21, 4-25, 4-29
N36226 4-16
N36228 4-3, 4-5, 4-21, 4-25, 4-29
N36232 6-2
N36233 6-2, 6-5, 6-6, 6-7, 6-8, 6-15
N36236 6-12
N36240 5-3
N36242 6-12
N36243 5-3
N36259 9-3, 9-11
N36263 18-7, 14-10, 14-14, 14-17, 18-17, 14-20, 14-28, 14-31, 14-40, 14-43, 16-3, 16-7, 16-10, 15-10, 16-13, 15-13, 16-16, 16-19, 16-26, 16-29, 16-32, 16-35, 16-38, 16-41, 17-7, 17-10, 17-16, 17-19, 16-44, 16-47, 18-4, 17-4, 18-11, 17-13, 18-14
N36265 9-7, 22-15, 9-15
N36266 9-9, 9-17
N36267 9-9
N36287 9-18, 22-46
N36342 , 4-3, 7-43, 4-5, 4-7
N36353 6-2
N36370 12-19
N36372 12-21
N36380 14-3, 14-6, 14-23, 15-3, 15-6, 15-17, 16-3, 16-6, 16-21, 17-3, 17-6, 17-21, 18-3, 18-6, 18-10, 18-19
N36382 13-9, 13-11, 14-3, 14-6, 14-17, 14-23, 14-27, 14-30, 14-39, 14-42, 15-3, 15-6, 15-17, 16-3, 16-6, 16-15, 16-21, 16-25, 16-28, 16-37, 16-40, 17-3, 17-6, 17-16, 17-21, 18-3, 18-6, 18-10, 18-19
N36392 5-9
N36401 9-3, 9-11
N36405 19-5, 19-7
N36425 9-3, 9-11
N36427 9-3, 9-11
N36430 9-3
N36431 9-3, 9-11
N36432 9-3, 9-11
N36435 9-3, 9-11
N36440 10-3, 10-5, 10-7, 10-9, 10-11, 10-13
N36443 18-7, 14-10, 14-14, 14-17, 18-17, 14-20, 14-28, 14-31, 14-40, 14-43, 16-3, 16-7, 16-10, 15-10, 16-13, 15-13, 16-16, 16-19, 16-26, 16-29, 16-32, 16-35, 16-38, 16-41, 17-7, 17-10, 17-16, 17-19, 16-44, 16-47, 18-4, 17-4, 18-11, 17-13, 18-14
N36444 14-3, 14-6, 14-9, 14-23, 14-27, 14-30, 14-39, 14-42, 15-3, 15-6, 15-17, 16-3, 16-6, 16-9, 16-21, 16-25, 16-28, 16-37, 16-40, 17-3, 17-6, 17-9, 17-21, 18-3, 18-6, 18-10, 18-19
N36447 12-19, 12-39, 12-41
N36453 18-7, 16-7, 16-10, 14-10, 16-3, 17-7, 17-10, 18-4, 17-4, 18-11
N36467 6-12
N36468 6-2, 6-3, 6-15
N36498 12-19, 13-3, 13-5, 13-7
N36556 9-3, 9-11, 12-20
N36597 14-59, 19-39, 9-3, 9-11, 15-23, 19-47, 19-57, 14-61, 19-71, 20-11, 19-73, 20-9
N36691 4-3, 4-7
N36692 4-3, 4-7
N36708 9-3, 9-11
N36709 9-3, 9-11

N36710 9-3, 9-11
N36717 9-3, 9-11
N36718 9-3, 9-11
N36719 9-3, 9-11
N36720 9-3, 9-11
N36721 9-3, 9-11
N36731 9-3, 9-11
N36732 9-3, 9-11
N36733 9-3, 9-11
N36734 9-3, 9-11
N36735 9-3, 9-11
N36736 9-3, 9-11
N36738 9-3, 9-11
N36744 9-3, 9-11
N36748 9-3, 9-11
N36749 9-11, 9-13
N36766 9-3, 22-7, 22-9, 9-11
N36774 9-3, 9-11
N36813 9-3, 9-11
N36830 12-9, 12-11, 12-15, 12-17, 12-25, 12-33, 12-35, 12-37, 12-39
N36833 14-3, 14-6, 14-9, 14-17, 14-20, 14-23, 14-27, 14-30, 14-34, 14-37, 14-39, 14-42, 14-46, 14-49, 15-3, 15-6, 15-17, 16-3, 16-6, 16-9, 16-15, 16-18, 16-21, 16-25, 16-28, 16-31, 16-34, 16-37, 16-40, 16-43, 16-46, 17-3, 17-6, 17-9, 17-16, 17-19, 17-21, 18-3, 18-6, 18-10, 18-19
N36900 1-9, 7-49, 1-11, 7-47, 12-25, 12-33, 12-35, 12-37
N36914 12-19
N36945 9-3, 9-11
N36964 10-35
N36965 10-35
N36966 10-35
N36967 10-35
N36972 10-29
N36985 14-59, 9-3, 9-11, 15-23, 14-61
N36995 14-59, 9-3, 14-21, 15-23, 14-61
N36998 7-41, 7-43
N37012 19-12
N37013 19-12
N37014 19-12, 20-9, 20-11
N37016 19-12, 20-9, 20-11
N37018 19-12
N37020 19-12
N37035 14-4, 14-7, 14-10, 14-23, 15-4, 15-7, 15-17, 16-21, 17-4, 17-7, 17-10, 17-21, 18-4, 18-7, 18-11, 18-19
N37036 14-4, 14-7, 14-10, 14-23, 15-4, 15-7, 15-17, 16-21, 17-4, 17-7, 17-10, 17-21, 18-4, 18-7, 18-11, 18-19
N37037 18-6, 14-23, 15-3, 14-3, 15-17, 16-3, 15-6, 17-3, 17-21, 16-21, 18-3, 18-10, 18-19
N37038 14-13, 14-16, 14-19, 14-25, 15-9, 15-12, 15-19, 16-12, 16-15, 16-18, 16-23, 17-12, 17-15, 17-18, 17-23, 18-13, 18-16, 18-21
N37039 14-62
N37041 19-21
N37047 22-17, 22-19, 22-21, 22-23, 22-25, 22-27
N37049 4-27, 4-31, 10-3, 10-5, 10-7, 5-7, 5-8, 10-9, 10-11, 10-13, 10-15, 10-17, 10-19, 4-23, 12-37, 12-9, 12-11, 12-25
N37050 4-3
N37055 4-3
N37060 4-3
N37065 4-3
N37074 12-9, 12-15, 12-33
N37075 12-9, 12-15, 12-33
N37076 12-9, 12-15, 12-25, 12-33, 12-37
N37077 12-9, 12-15, 12-33
N37115 9-3, 9-11
N37146 20-16
N37147 20-16
N37148 20-16
N37159 5-3
N37160 5-3
N37162 4-19, 4-27, 4-31, 5-9, 4-23
N37176 5-3, 5-9
N37180 , 14-23, 15-3, 14-3, 15-17, 16-3, 15-6, 17-3, 17-21, 16-21, 18-3, 18-10, 18-19
N37182 9-18, 9-19, 9-21, 9-23, 22-46, 22-47, 22-49
N37183 9-18, 9-19, 9-21, 9-23, 22-46, 22-47, 22-49, 22-51
N37190 1-4, 9-7, 9-9, 22-13, 9-15, 9-17, 22-15, 9-25
N37210 9-3, 9-11
N37216 7-53, 7-57, 7-59, 7-61
N37218 7-59
N37219 8-5, 8-9, 7-51, 8-5, 8-11, 8-13, 8-15, 8-17, 8-19, 8-21, 8-23, 22-29, 12-31, 22-37, 7-27, 7-31, 22-31, 22-39
N37222 9-3, 9-11
N37223 9-3, 9-11
N37233 7-53, 7-57, 7-59, 7-61
N37301 4-3, 7-43, 4-5, 4-7
N37319 7-53, 7-57, 7-59, 7-61
N37330 19-35, 19-21, 19-25, 19-28, 19-35, 19-45, 19-55, 19-63, 19-65, 19-67, 19-69
N37335 5-9
N37339 14-59, 9-3, 9-11, 15-23, 14-61
N37341 19-7, 19-5
N37342 19-10
N37343 19-10
N37344 19-10
N37346 19-10
N37347 19-7, 19-5
N37348 15-9, 14-13, 18-13, 14-16, 18-16, 14-19, 14-33, 14-36, 16-12, 16-15, 16-18, 16-31, 16-34, 14-45, 14-48, 17-12, 16-43, 16-46, 17-15, 17-18
N37349 4-7
N37353 10-46
N37357 10-46, 10-47
N37374 10-46
N37393 4-7
N37400 5-3
N37403 14-13, 14-16, 14-19, 14-33, 14-36, 14-45, 14-48, 15-9, 15-12, 16-12, 16-15, 16-18, 16-31, 16-34, 16-43, 16-46, 17-12, 17-15, 17-18, 18-13, 18-16
N37404 4-33, 15-14, 15-9, 15-12, 15-19, 14-21, 18-13, 18-16, 18-21
N37410 5-3
N37414 8-9, 7-37, 8-5
N37417 , 4-19
N37421 14-13, 18-14, 14-16, 14-19, 14-25, 14-34, 14-37, 16-12, 16-15, 16-18, 16-23, 16-32, 16-35, 14-46, 14-49, 17-4, 17-12, 17-13, 17-23, 16-44, 16-47, 17-15, 17-18
N37428 8-2
N37445 4-7
N37456 10-46, 10-47
N37458 10-46
N37459 10-3, 10-5, 10-7, 10-9, 10-11, 10-13, 10-15, 10-17, 10-19, 10-21, 10-23, 10-25, 10-46, 11-7
N37469 10-46
N37483 10-46, 12-21, 10-47
N37492 10-46, 10-47
N37496 10-46
N37514 14-3, 14-6, 14-9, 14-13, 14-16, 14-19, 14-25, 15-3, 15-6, 15-9, 15-12, 15-19, 16-3, 16-6, 16-9, 16-12, 16-15, 16-18, 16-23, 17-3, 17-6, 17-9, 17-12, 17-15, 17-18, 17-21, 17-23, 18-3, 18-6, 18-10, 18-13, 18-16, 18-21
N37619 2-37, 1-13, 2-35
N37620 1-21, 2-33, 2-9, 2-11, 2-13, 2-21, 2-23, 1-23, 2-25, 2-35, 2-37
N37621 2-37, 1-13, 2-35
N37622 1-15, 1-17, 1-21, 2-33, 2-9, 2-11, 2-13, 2-21, 2-23, 1-23, 2-25, 2-35, 2-37
N37638 12-9, 12-11, 12-25, 12-37
N37646 9-7, 22-15, 9-15
N37657 15-9, 15-12, 18-13, 18-16
N37660 1-4, 1-5
N37696 9-3
N37700 9-7
N37711 1-9, 1-11
N37720 12-9, 12-11, 12-15, 12-17
N37737 12-19, 12-21
N37742 11-2, 11-10, 15-17, 18-19
N37760 4-7
N37787 8-15, 7-37, 7-51, 7-53, 7-55, 7-57, 7-59, 7-61, 7-62, 8-11, 8-23, 22-31, 22-35, 22-39, 22-42, 7-35, 7-39, 19-21, 19-23, 22-27
N37802 11-2
N37809 11-2, 19-5, 19-7
N37810 11-2
N37811 11-2

N37813 11-2
N37816 11-2
N37819 11-2
N37820 11-2
N37821 11-2
N37822 11-2
N37823 11-2
N37824 11-2, 22-9
N37825 11-2
N37826 11-3, 11-5, 11-7, 11-9, 14-23, 15-17, 16-21, 17-21, 18-19
N37829 9-18, 9-19, 9-21, 9-23, 22-46, 22-47, 22-49, 22-51
N37844 9-25
N37845 16-4, 16-7, 18-7, 16-10, 16-13, 16-16, 16-19, 17-4, 17-7, 17-10, 17-13, 17-16, 17-21, 17-23, 16-23, 18-4, 18-11, 18-14, 18-17, 17-19, 18-21
N37846 16-4, 16-7, 16-10, 17-4, 17-7, 17-10, 17-21, 18-4, 18-7, 18-11
N37847 16-4, 16-7, 16-10, 17-4, 17-7, 17-10, 18-4, 18-7, 18-11
N37849 , 18-14, 13-17, 18-17, 13-19, 16-4, 16-7, 16-10, 16-13, 17-4, 17-7, 17-10, 17-13, 17-16, 16-16, 17-19, 16-19, 17-23, 16-23, 18-4, 18-7, 18-11, 18-21
N37865 9-9, 10-15, 10-17, 10-19
N37876 15-15
N37888 9-7, 22-15, 9-15
N37900 13-9, 13-11, 15-3, 15-6, 15-9, 15-12, 15-17, 15-19, 18-3, 18-6, 18-13, 18-16, 18-19, 18-21
N37905 11-2
N37907 4-7, 9-23, 9-18, 9-19, 9-21, 4-34, 22-46, 22-47, 22-49, 22-51
N37911 9-18, 9-19, 9-21, 9-23
N37912 9-18, 9-19, 9-21, 9-23
N37914 14-3, 14-6, 14-9, 14-13, 14-16, 14-19, 14-23, 14-25, 14-28, 14-31, 14-33, 14-36, 14-40, 14-43, 14-45, 14-48, 15-3, 15-6, 15-9, 15-12, 15-17, 15-19, 16-3, 16-6, 16-9, 16-12, 16-15, 16-18, 16-21, 16-23, 16-26, 16-29, 16-31, 16-34, 16-38, 16-41, 16-43, 16-46, 17-3, 17-6, 17-9, 17-12, 17-15, 17-18, 17-21, 17-23, 18-3, 18-6, 18-10, 18-13, 18-16, 18-19, 18-21
N37915 14-3, 14-6, 14-9, 14-23, 15-3, 15-6, 15-17, 16-21, 17-3, 17-6, 17-9, 17-21, 18-3, 18-6, 18-10, 18-19
N37917 9-7, 22-15, 9-15
N37920 10-31, 10-33
N37932 9-25
N37942 9-7
N37944 9-9, 9-17
N37950 10-15, 10-21
N37952 10-48
N37957 9-7, 22-15, 9-15
N37995 4-7
N38017 6-12
N38078 7-41
N38098 5-9
N38662 9-11
N39486 12-9, 12-11, 12-15, 12-17, 12-19, 12-27, 12-29
N40472 19-17
N40540 20-9, 20-11
N40544 10-31, 10-33
N40545 10-29, 10-35
N40650 1-6, 1-7
N40660 12-21
N40671 9-3, 9-5
N40685 9-3, 9-11
N40688 9-9, 22-13, 22-15, 9-3, 9-11
N40693 9-3, 9-11
N40726 12-21
N40727 12-21
N40728 12-21
N40732 12-21
N40735 10-26, 10-27
N40737 12-21
N40748 19-50, 19-59
N40761 15-17
N40805 9-3, 9-11
N40865 9-25
N40866 10-15, 10-21
N40867 12-19
N40870 9-3
N40899 19-7, 19-5, 19-21, 19-25, 19-28, 19-35, 19-45, 19-55, 19-63, 19-65, 19-67, 19-69
N40956 9-3
N40957 9-3
N40975 6-12
N40980 9-3, 9-11
N40982 1-4, 1-5
N40995 10-39
N41220 19-18
N41221 19-18
N41594 20-9, 20-11
N41596 20-9, 20-11
N42067 10-35
N42089 20-9, 20-11
N42090 20-9, 20-11
N42091 20-9, 20-11
N42098 12-20, 20-9, 20-11
N42127 22-3
N42128 22-3
N42129 22-3
N42130 22-3
N42140 9-3
N42143 20-9, 20-11
N42145 20-9, 20-11
N42159 6-2, 6-3
N42163 9-7, 22-15, 9-15
N42190 1-9, 1-11
N42195 9-7
N42198 20-9, 20-11
N42213 12-23, 10-26, 10-27, 10-52, 10-53, 12-31, 10-52
N42220 9-19, 9-21, 9-23, 22-47, 22-49, 22-51
N42227 10-37, 10-39
N42241 10-37, 10-39
N42242 10-37, 10-39
N42243 10-37, 10-39
N42244 10-37, 10-39
N42245 10-37, 10-39
N42253 10-35, 10-37, 10-39
N42254 10-35, 10-37, 10-39
N42255 10-35, 10-37, 10-39
N42256 10-35, 10-37, 10-39
N42257 10-35, 10-37, 10-39
N42263 12-20
N42264 12-20
N42266 12-20
N42267 12-20
N42273 12-20
N42274 10-29, 10-31, 10-33
N42276 12-20
N42278 12-20
N42279 12-19, 12-20
N42365 17-4, 17-7, 17-10, 17-13, 17-16, 17-19, 18-4, 18-7, 18-11, 18-14, 18-17
N42510 9-7, 9-15
N42535 , 7-14, 7-6
N42540 9-3, 9-11
N42880 4-33, 15-14, 14-21
N42881 4-33, 15-14, 14-21
N44013 19-12
N44049 19-7, 19-5
N44135 9-7
N44137 9-7, 9-15
N44185 11-3, 11-7
N44190 11-3, 11-7
N44253 19-7, 19-5
N44255 19-7
N44256 19-7
N44264 19-7, 19-5
N44265 19-7, 19-5
N44296 ii
N44298 ii
N44505 1-6, 1-7
N44525 4-5
N44531 4-5
N44532 4-5
N44536 4-3, 4-5, 4-21
N44550 , 4-5
N44568 11-3, 11-7
N44572 7-57, 7-59, 7-61
N44573 10-48
N44574 10-48
N44580 4-3, 4-5, 4-18, 4-19
N44584 4-3, 4-5, 4-21, 4-25, 4-29
N44587 7-43
N44589 7-13, 7-23, 7-43, 7-45
N44591 7-6, 7-14, 8-2
N44595 5-9
N44597 9-19, 22-47
N44658 6-13, 6-14
N44659 6-13, 6-14
N44663 4-5
N44664 7-43
N44669 19-10
N44671 19-7, 19-5, 19-7
N44676 7-14
N44682 10-3, 10-5, 10-7, 10-9, 10-11, 10-13
N44687 10-48
N44710 4-7, 4-11, 4-13, 4-23, 4-27, 4-31, 4-9, 19-21
N44734 19-10
N44740 12-33, 12-35
N44742 12-9, 12-11
N44744 12-33, 12-35, 12-39
N44955 14-4, 14-7, 14-10, 14-23, 15-4, 15-7, 15-17, 16-21, 17-4, 17-7, 17-10, 17-21, 18-4, 18-7, 18-11, 18-19
N44956 15-4, 15-7, 15-17, 18-4, 18-7, 18-11, 18-19

N45036 10-43
N45037 10-43
N45042 10-43
N45070 , 4-3, 4-5, 4-7, 7-43
N45071 4-3, 4-5, 4-7
N45072 4-3, 4-5, 4-7
N45076 7-41
N45086 7-11
N45092 6-4
N45120 6-2, 6-3, 6-15
N45166 19-35
N45190 10-48
N45192 , 17-4, 17-10
N45195 19-37, 12-3, 17-4, 12-5, 17-7, 17-10, 17-13, 17-24, 18-4, 18-7, 18-14, 17-16, 18-17, 17-19, 18-11, 18-23, 19-31, 19-33, 19-43, 19-45, 19-53, 19-55, 22-23, 22-25, 22-27, 19-61
N45198 19-35, 19-21, 19-25, 19-28, 19-45, 19-55, 19-63, 19-65, 19-67, 19-69
N45199 22-7, 19-35, 7-37, 7-39, 19-25, 19-28, 19-45, 19-55, 19-63, 19-67, 19-69, 19-65
N45205 4-19
N45207 4-19
N45212 13-5, 13-7, 13-13, 13-15, 13-17, 13-19
N45418 14-59, 15-23, 14-61
N45505 18-22
N45508 17-24, 18-22, 18-23
N45509 17-24, 18-22, 18-23
N45511 17-24, 18-22, 18-23
N45512 17-24, 18-22, 18-23
N45513 17-24, 18-22, 18-23
N45522 4-3, 4-5, 4-7
N45530 8-5, 8-7, 8-9, 8-13, 8-15, 8-17, 8-19, 8-21, 8-23, 22-29, 22-31, 22-33, 22-35, 22-37, 22-39, 22-41
N45644 19-5, 19-7
N45645 19-5, 19-7
N45690 10-37, 10-39, 10-40, 10-41, 10-43
N45825 14-59, 15-23, 14-61
N45848 12-15, 12-17
N45993 12-33, 12-35, 12-37
N45999 12-33, 12-35, 12-37
N46629 20-3
N46786 6-4, 6-5
N46787 7-41
N46948 20-9, 20-11
N47004 15-24, 14-59, 15-23, 14-57, 14-61
N47005 14-59, 15-23, 14-61
N47007 14-59, 15-23, 14-61
N47008 15-24, 14-59, 15-23, 14-57, 14-61
N47037 12-39, 12-41
N47177 14-59, 15-23, 14-61
N47198 12-9, 12-11, 12-15, 12-17
N47298 14-59, 15-23, 14-61
N47333 12-15, 12-17
N47343 12-19, 12-39
N47400 19-26, 19-29
N47406 6-4
N47407 6-4
N47408 6-4, 6-5, 6-6, 6-7
N47411 6-4, 6-5
N47412 6-4, 6-5
N47415 7-43, 7-45, 7-47, 7-49
N47416 9-3, 9-11
N47423 19-26
N47424 19-26
N47425 19-26
N47426 19-26
N47427 19-26
N47428 19-26
N47429 19-26
N47430 19-26
N47431 19-26
N47432 19-26
N47433 19-26
N47434 19-26
N47435 19-26
N47436 19-26
N47437 19-26
N47438 19-26
N47439 19-26
N47440 17-24, 18-22, 18-23
N47442 19-26, 19-39
N47443 19-26
N47444 19-26
N47445 19-26
N47446 19-26
N47447 19-26
N47448 19-26
N47449 19-26
N47451 19-26
N47452 19-26
N47453 19-26, 19-39
N47464 19-15
N47700 4-25, 4-29, 12-15, 12-17, 12-25, 12-33, 12-35, 12-37
N47706 12-39, 12-41
N47710 12-33, 12-35, 12-37
N47735 4-32
N47738 4-32
N47800 10-44, 11-5, 11-9
N47801 10-44
N47802 10-44
N47903 , 13-3, 18-14, 18-17, 15-19, 17-23, 13-5, 13-7, 13-9, 13-15, 13-17, 13-19, 14-14, 14-17, 16-3, 14-4, 16-6, 14-7, 16-9, 14-10, 16-13, 16-16, 14-20, 14-48, 17-4, 17-7, 17-10, 17-13, 16-16, 16-19, 16-23, 16-46, 17-16, 17-19
N47940 12-39
N47941 12-39
N48000 19-26
N48001 19-26
N48002 19-26
N48003 19-26
N48004 19-26
N48005 19-26
N48006 19-26
N48007 19-26
N48008 19-26
N48009 19-35
N48010 19-26
N48011 19-26
N48013 19-26
N48014 19-26
N48016 19-26
N48044 19-25
N48057 7-57, 7-61, 8-17, 8-21, 8-23
N48071 , 7-39, 8-25, 7-37, 8-25, 12-56, 13-23, 12-56, 14-51, 14-53, 14-55, 16-49, 17-4, 17-7, 17-10, 17-13, 17-16, 17-19, 18-4, 18-7, 18-11, 18-14, 18-17, 22-52
N48075 4-9, 7-45
N48080 11-3
N48090 11-3
N48111 14-59, 15-23, 14-61
N48120 14-59, 15-23, 14-61
N48126 14-59, 15-21, 16-4, 16-13, 16-13
N48300 12-39
N48310 12-33, 12-35, 12-37
N48320 12-33, 12-35, 12-37
N48467 15-24, 14-57
N48602 9-5
N48604 9-5
N48606 9-5
N48609 9-5, 9-13
N48610 9-5, 9-13
N48612 9-5, 9-13, 22-11
N48621 9-5, 9-13, 22-11
N48622 1-13
N48623 1-13
N48634 1-13, 1-15, 1-17
N48636 1-13, 1-15
N48644 1-21
N48645 1-21
N48656 1-13, 1-15, 1-17, 1-19
N48663 1-13, 1-15, 1-17, 1-19
N48667 1-13, 1-15, 1-17, 1-19
N48670 1-13, 1-15, 1-17, 1-19
N48688 1-13, 1-15, 1-17
N48725 12-33, 12-35
N48728 12-15, 12-17, 12-33, 12-35
N48729 12-15, 12-17, 12-33, 12-35
N48730 12-9, 12-11, 12-17
N48748 22-17, 22-19, 22-21, 22-23, 22-25, 22-27
N48750 19-39, 19-47, 22-23, 22-25, 22-27, 22-44, 19-57
N48782 22-7
N48900 4-9, 7-45
N48927 10-37, 10-39
N48949 4-9, 7-45
N48950 7-45
N48960 1-2
N48970 1-2
N48980 1-2
N48990 4-3, 4-7
N49110 14-61, 15-23, 16-4, 16-13, 22-17, 22-19, 22-21, 22-23, 22-25, 22-27
N49146 12-9, 12-15, 12-33
N49147 12-9, 12-11, 12-15, 12-17, 12-25, 12-33, 12-35, 12-37
N49165 19-25
N49200 2-13
N49219 1-7

N49221 1-6
N49225 2-7
N49230 2-3, 2-5, 2-7, 2-15, 2-17, 2-19
N49240 2-15, 2-17, 2-19
N49245 2-9, 2-11, 2-13, 2-21, 2-23, 2-25, 2-33, 2-35, 2-37
N49310 12-19
N49311 12-23
N49312 12-23
N49313 12-23
N49320 12-23
N49325 12-23
N49328 12-23, 12-31
N49330 12-23
N49335 12-23, 12-31
N49349 12-9, 12-17, 12-33
N49388 22-4, 22-5
N49389 22-4, 22-23, 22-25, 22-27
N49394 22-3, 22-7
N49396 4-32
N49456 22-4, 22-5
N49459 12-9, 12-17, 12-33
N49460 13-3, 13-5, 13-7, 13-9, 13-11, 16-4, 16-7, 16-10, 16-13, 16-16, 16-19, 16-26, 16-29, 16-32, 16-35, 16-38, 16-41, 16-44, 16-47
N49465 7-45
N49469 12-39, 12-41, 12-43, 12-45, 12-47, 12-49
N49470 12-23
N49471 12-43
N49472 12-39
N49473 12-39
N49474 12-39
N49475 12-39
N49476 12-45, 12-47, 12-49
N49477 12-45, 12-47, 12-49
N49478 12-45, 12-47, 12-49
N49480 12-43, 12-45, 12-49
N49482 12-43
N49483 12-43, 12-45, 12-47, 12-49
N49484 12-43
N49485 12-43
N49486 , 12-43, 12-45, 12-47
N49487 12-50
N49488 12-43, 12-45, 12-47, 12-49, 12-50, 12-51, 12-52
N49550 12-25, 12-33, 12-35, 12-37
N49560 4-19
N49570 12-19
N49573 12-19
N49575 12-9, 12-11, 12-15, 12-17, 12-25, 12-33, 12-35, 12-37
N49580 12-9, 12-11, 12-15, 12-17
N49587 6-3, 6-6, 6-7
N49588 6-3, 6-6, 6-7
N49589 6-3, 6-6, 6-7
N49590 4-15, 6-6, 6-7
N49591 6-3, 6-6, 6-7
N49592 6-3, 6-6, 6-7
N49593 6-3, 6-6, 6-7
N49594 6-3, 6-6, 6-7
N49595 4-9, 6-6, 7-45
N49596 4-9, 6-6
N49597 6-3, 6-6, 6-7
N49598 6-3, 6-6, 6-7
N49599 12-27, 13-7, 13-9, 13-11, 14-34, 14-37, 14-46, 14-49, 14-51, 14-53, 14-55, 16-32, 16-35, 16-44, 16-47
N49600 2-11
N49605 2-21
N49611 10-48
N49612 10-48
N49613 10-48
N49615 2-9, 2-11, 2-13, 2-21, 2-23, 2-25
N49621 10-44
N49635 4-9
N49636 7-34, 7-35
N49640 4-7, 4-27, 4-31, 4-23
N49642 12-3, 12-5, 13-5, 13-7, 13-9, 13-15, 13-17, 19-31, 19-33, 19-43, 19-50, 19-53, 19-59, 19-61
N49643 4-9, 4-14, 4-15, 4-23, 4-27, 4-31, 7-45
N49652 10-15, 10-21
N49653 4-5
N49658 7-13, 7-45
N49659 4-3, 4-5
N49670 1-2
N49675 19-21
N49678 2-5
N49680 1-2
N49690 1-2
N49693 2-19
N49695 2-15
N49696 6-7
N49778 20-5, 20-7
N49783 16-3, 16-7, 16-10, 16-13, 16-16, 16-19, 16-32, 16-35, 16-44, 16-47, 17-4, 17-7, 17-10, 17-13, 17-16, 17-19, 18-4, 18-7, 18-11, 18-14, 18-17
N49793 22-4, 22-5
N49884 12-19
N49885 12-19
N49900 12-33, 12-35
N49910 12-33, 12-35
N49915 12-23
N49921 12-33, 12-35
N49923 12-25, 12-33, 12-35, 12-37
N49930 10-48
N49933 12-6, 12-7, 13-13, 13-15, 13-17, 13-19
N49936 12-39, 12-41
N49937 12-39, 12-41
N49940 12-19
N49942 12-39, 12-41
N49943 12-39
N49946 12-19, 13-3, 13-5, 13-7
N49947 12-19
N49950 12-9, 12-11, 12-15, 12-17, 12-33, 12-35
N50005 22-7
N50006 22-7
N50031 22-13, 22-15
N50039 22-3
N50069 19-5, 19-7
N50070 22-7, 19-35, 19-37, 19-39
N50079 , 17-10
N50083 22-3
N50084 15-19
N50086 22-7, 22-9
N50088 14-4, 14-7, 14-10, 14-23, 16-21, 17-4, 17-7, 17-10, 17-21
N50090 22-37, 22-39
N50091 22-37, 22-39
N50099 14-4, 14-7, 14-10, 14-23, 16-21, 17-4, 17-7, 17-10, 17-21
N50177 11-5, 11-9
N50178 11-5, 11-9
N50190 8-5, 8-13, 8-19, 22-29, 22-37, 22-41
N50195 8-9, 8-17, 8-21, 22-33
N50198 8-5, 8-9, 8-13, 8-17, 8-19, 8-21, 22-29, 22-33, 22-37, 22-41
N50250 22-7
N50265 22-3
N50270 22-15
N50271 22-15
N50273 22-15
N50274 22-13, 22-15
N50275 22-13, 22-15
N50282 22-4, 22-5
N50283 22-3
N50284 22-3
N50285 22-9
N50291 22-9
N50294 22-4, 22-5
N50296 22-3
N50297 22-9
N50298 22-10
N50299 22-10
N50306 22-11
N50310 22-11
N50311 22-11
N50312 22-11
N50317 22-9
N50320 22-15, 9-15
N50324 22-17, 22-19, 22-21, 22-23, 22-25, 22-27
N50325 22-23, 22-25, 22-27
N50359 7-41, 4-5
N50361 7-41
N50362 4-5, 7-41, 4-3, 7-43
N50363 20-3
N50364 20-3
N50365 20-5
N50366 20-5
N50367 20-3
N50370 20-3
N50500 4-3, 4-21
N50531 22-4, 22-5
N50535 1-23
N50540 1-23
N50545 1-13, 1-15, 1-17, 1-19
N50601 6-5, 6-6, 6-7, 6-8
N50602 6-5, 6-6
N50610 4-5, 4-25
N50620 2-15, 2-17, 2-19, 3-15, 3-17, 3-19
N50622 19-35, 19-39, 12-3, 12-5, 19-31, 19-33, 19-37
N50625 4-9
N50626 4-9
N50630 4-9
N50648 8-5, 8-7
N50653 11-9
N50654 7-4, 20-14
N50655 2-3, 2-5, 2-7, 2-27
N50656 7-51, 7-53, 7-55, 7-57, 7-59, 7-61, 8-11, 8-15, 22-31, 22-39
N50659 7-59, 8-19

N50660 7-57, 8-17
N50665 7-55, 8-13, 8-15
N50667 8-17
N50668 8-19
N50669 8-13, 8-15
N50670 7-59
N50671 22-41
N50672 22-41
N50677 7-51, 7-53, 7-55, 7-59, 22-39
N50678 7-51, 7-53, 7-55, 7-57, 7-59, 7-61, 7-62, 8-7, 8-11, 8-15, 8-23, 8-24, 22-31, 22-35, 22-39, 22-42
N50683 7-19, 7-27, 7-31, 7-57, 7-61
N50684 7-27, 7-31
N50691 7-51, 7-53, 7-55, 7-57, 7-59, 7-61, 7-62, 8-7, 8-11, 8-15, 8-23, 8-24, 22-31, 22-35, 22-39, 22-42
N50697 7-35
N50700 2-9, 2-11, 2-13, 2-21, 2-23, 2-25, 2-33, 2-35, 2-37
N50705 2-23
N50725 22-9
N50729 2-3, 2-5, 2-7, 2-15, 2-17, 2-19, 2-27, 2-29, 2-31
N50734 22-9
N50736 22-46, 22-47, 22-49
N50740 9-19, 9-18, 9-21, 22-49
N50742 9-19, 9-18, 9-21, 22-49
N50744 22-3
N50747 19-39
N50748 22-4
N50756 1-9, 1-11
N50777 8-9, 8-17, 8-21, 22-33
N50780 8-5, 8-13, 8-19, 22-29, 22-37, 22-41
N50839 7-34
N50840 7-51
N50842 8-5, 8-9, 8-13, 8-17, 8-19, 7-51, 8-5, 8-15, 8-21, 8-23, 7-27, 22-29, 7-31, 22-31, 22-37, 22-39, 7-8, 7-9
N50843 7-8, 7-9, 7-19, 7-23, 7-27, 7-31, 7-51, 7-53, 7-55, 7-57, 7-61
N50847 7-8, 7-9, 7-51
N50858 22-43
N50860 22-43
N50866 2-3, 2-5, 2-7, 3-3, 3-5, 3-7
N50869 9-18, 9-19, 9-21, 9-23, 22-46, 22-47, 22-49, 22-51
N50900 14-3, 15-3, 15-9, 15-12, 15-19, 16-3, 17-3, 18-3, 18-13, 18-16, 18-19, 18-21
N50901 18-19
N50920 4-7
N50925 4-3, 4-21
N50926 4-19
N50932 7-7, 7-51, 7-55, 7-59
N50933 7-53, 7-57
N50945 2-9, 2-11, 2-13, 2-21, 2-23, 2-25, 2-33, 2-35, 2-37
N50949 4-3, 4-21
N50951 7-51, 7-53, 7-55, 7-57, 7-59, 7-61
N50955 7-55
N50956 7-27, 7-31, 7-55
N51087 20-3
N51118 2-3, 2-5, 2-7, 2-15, 2-17, 2-19, 2-27, 2-29, 2-31
N51132 1-9, 1-11
N51134 1-9, 1-11
N51137 1-9, 1-11
N51139 11-5, 11-9
N51140 11-5, 11-9
N51141 11-9
N51145 11-5, 11-9
N51146 2-15, 2-17, 2-19
N51201 7-51, 7-53, 7-55, 7-57, 7-59, 7-61, 7-62, 8-7, 8-11, 8-15, 8-23, 8-24, 22-31, 22-35, 22-39, 22-42
N51219 7-51, 8-5, 8-7
N51233 11-5
N51234 11-5
N51235 11-9
N51236 11-9
N51238 2-5, 2-7, 2-15, 2-17, 2-19, 2-27, 2-29, 2-31, , 3-3, 3-5, 3-7, 3-15, 3-17, 3-19, 3-27, 3-29, 3-31
N51245 22-29, 22-31
N51246 22-29, 22-31, 22-35
N51250 9-5
N51256 7-52
N51257 8-9, 8-11
N51260 7-53, 7-57, 7-59, 7-61, 19-10
N51261 4-7
N51265 12-9, 12-11
N51270 12-19
N51275 , 15-7, 18-14, 18-17, 13-20
N51280 9-5
N51360 12-21
N51366 12-23
N51387 6-5, 6-6, 6-7, 6-8, 6-9, 6-10
N51388 6-5, 6-6, 6-7, 6-8, 6-9
N51390 1-9
N51391 1-9, 1-11
N51414 19-41
N51415 10-48
N51416 10-48
N51417 10-48
N51418 10-48
N51440 9-9, 9-17, 22-13, 22-15
N51441 9-9, 9-17, 22-13, 22-15
N51444 9-9, 9-17, 22-13, 22-15
N51445 9-9, 9-17
N51500 9-9
N51503 9-9
N51520 22-7
N51524 22-9
N51525 22-9
N51528 22-9
N51530 22-11
N51533 22-11
N51537 22-3
N51538 22-9
N51548 19-25, 12-3, 19-28, 19-31
N51549 1-13
N51610 4-13, 4-29
N51615 4-13, 4-29
N51630 4-13
N51640 10-3, 10-5, 10-7, 10-9, 10-11, 10-13, 10-15, 10-17, 10-19, 10-21, 10-23, 10-25
N51660 9-23, 22-51
N51661 9-23, 22-51
N51700 7-47, 7-49
N51701 7-47, 7-49
N51703 9-11
N51704 9-11
N51705 9-11
N51710 1-4
N51713 9-11
N51714 9-11
N51715 9-11
N51725 12-9, 12-11, 12-15, 12-17, 12-25, 12-33, 12-35, 12-37
N51731 7-47
N51732 4-15
N51735 4-15
N51739 7-45
N51740 9-15
N51745 9-15
N51750 9-17
N51753 9-23
N51760 10-3, 10-5, 10-7, 10-9, 10-11, 10-13, 10-15, 10-17, 10-19, 10-21, 10-23, 10-25
N51761 10-48
N51762 10-48
N51763 10-48
N51764 10-48
N51766 9-17
N51767 10-48
N51768 10-48
N51769 10-48
N51775 9-11
N51781 9-13
N51782 9-13
N51784 9-13
N51785 9-11
N51789 9-23, 22-51
N51790 9-21, 9-23, 22-49, 22-51
N51791 9-21, 9-23, 22-49, 22-51
N51792 11-5
N51793 11-9
N51794 11-9
N51800 7-47, 7-49
N51830 9-23
N51840 4-11, 4-13
N51850 2-29, 2-31
N51853 2-29
N51854 2-31
N51855 1-6, 1-7
N51860 1-13
N51862 2-33
N51863 2-35
N51864 2-37
N51865 2-33, 2-35, 2-37
N51871 9-11, 9-13
N51875 9-13
N51880 9-11
N51881 9-11
N51885 11-5, 11-9
N51890 2-27, 2-29, 2-31, 3-27, 3-29, 3-31
N51895 1-23
N51896 1-23
N51905 4-29
N51910 4-25, 4-29
N51920 4-23, 4-27, 4-31
N51933 4-31

N51935 4-29
N51940 4-25, 4-29
N51945 4-23, 4-27, 4-31
N51951 , 17-7, 18-17, 17-16, 17-19
N51952 , 17-7, 18-17, 17-16, 17-19
N51953 13-13, 13-15, 13-17, 13-19, 14-51, 14-53, 14-55
N51955 10-27
N51960 10-27
N51962 10-31, 10-33, 10-37, 10-39
N51965 , 13-3
N51967 10-31, 10-33, 10-37, 10-39
N51969 13-20, 13-21
N51970
N51971 13-20, 13-21
N51972 13-20
N51973 13-20, 13-21
N51975 13-20
N51977 10-31, 10-33, 10-37, 10-39
N51979 10-31, 10-33, 10-37, 10-39
N51983 10-26
N51985 12-19, 12-27, 13-7
N51990 , 16-4, 16-7, 16-10, 16-13, 18-14, 16-16, 18-17, 16-19, 16-26, 16-29, 16-32, 16-35, 17-4, 17-7, 16-38, 16-41, 16-44, 16-47, 17-10, 18-11, 17-13, 17-16, 17-19
N51995 22-11
N51996 7-7, 7-51, 7-53, 7-55, 7-57, 7-59, 7-61, 7-62
N51997 7-8
N51998 7-51, 7-53, 7-55, 7-57, 7-59, 7-61, 7-62
N52037 20-9, 20-11
N52683 21-5
N53009 , 18-17, 14-7, 14-17, 16-7, 16-16, 17-7, 17-16
N53013 7-37, 7-39
N53014 9-9, 9-17, 22-13, 22-15
N53018 9-9
N53020 12-3, 12-5, 13-5, 13-7, 13-9, 13-11, 13-15, 13-17, 13-19, 19-31, 19-33, 19-43, 19-53, 19-61
N53023 12-3, 13-5, 13-7, 13-9, 13-15, 13-17, 19-31, 19-43
N53030 19-41
N53031 19-41, 19-48, 19-49
N53032 19-41, 19-48
N53033 19-41
N53034 19-41
N53035 19-41
N53036 19-41
N53037 19-41
N53043 12-9, 12-11, 12-15, 12-17
N53052 19-41
N53053 19-41
N53054 19-41, 19-45, 19-47, 19-55, 19-57, 19-58, 19-65, 19-69, 19-73, 19-74
N53058 12-9, 12-11, 12-15, 12-17
N53063 1-9, 1-11
N53064 19-41
N53070 9-17
N53072 9-17
N53075 22-13, 22-15
N53078 22-13, 22-15
N53081 13-5, 13-7, 13-9, 13-11, 13-15, 13-17, 13-19
N53085 13-5, 13-7, 13-9, 13-11, 13-15, 13-17, 13-19
N53086 , 15-7, 14-7, 16-7, 17-7
N53090 20-5
N53092 22-13, 22-15
N53095 22-13, 22-15
N53098 22-13, 22-15
N53099 22-13, 22-15
N53100 4-25, 4-29
N53101 4-25, 4-29
N53105 4-21, 4-23, 4-25, 4-27, 4-29, 4-31
N53108 4-21, 4-23, 4-25, 4-27, 4-29, 4-31
N53110 4-23, 4-27, 4-31
N53115 4-23, 4-27, 4-31
N53120 4-23, 4-27, 4-31
N53125 4-29
N53130 4-29
N53132 4-25, 4-29
N53149 4-23, 4-27, 4-31
N53165 4-34
N53166 4-34
N53173 9-3
N53175 2-9, 2-11, 2-13, 2-21, 2-23, 2-25, 2-33, 2-35, 2-37
N53200 10-26
N53203 10-31, 10-33, 10-37, 10-39
N53205 12-19, 12-27, 12-39, 12-41, 13-3, 13-5, 13-7, 13-9, 13-15, 13-17, 13-19
N53207 10-26
N53208 13-7
N53209 10-27
N53211 13-7, 13-9, 13-11
N53214 12-9, 12-11, 12-15, 12-17
N53215 10-26, 10-27, 12-31, 10-52, 10-53, 10-52
N53220 12-19, 12-27, 12-39, 12-41
N53222 12-19, 12-27
N53224 12-39, 12-41, 12-43, 12-45, 12-47
N53225 12-39, 12-41
N53227 20-5
N53228 12-41, 20-9, 20-11
N53230 12-19
N53231 12-41, 20-9, 20-11
N53243 11-2, 11-10, 14-3, 14-6, 14-9, 14-13, 14-16, 14-19, 14-23, 14-25, 14-27, 14-30, 14-33, 14-36, 14-39, 14-42, 14-45, 16-3, 16-6, 16-9, 16-12, 16-15, 16-18, 16-21, 16-23, 16-25, 16-28, 16-31, 16-34, 16-37, 16-40, 16-43, 14-48, 17-3, 17-6, 17-9, 17-12, 17-15, 17-18, 17-21, 17-23, 16-46
N53247 14-23, 14-30, 14-42, 16-21, 16-28, 16-40, 17-21
N53249 14-23, 14-30, 14-42, 16-21, 16-28, 16-40, 17-21
N53273 4-23, 4-27, 4-31
N53274 4-27, 4-31
N53275 4-31
N53276 4-23, 4-27, 4-31
N53300 7-37, 7-39
N53302 22-13, 22-15
N53318 22-15
N53319 22-15
N53321 1-9, 1-11
N53331 22-23, 22-25, 22-27
N53332 7-7
N53333 1-13, 1-15, 1-17
N53334 22-9
N53335 22-3, 22-7, 22-9
N53344 , 17-10
N53350 10-45, 11-5, 11-9
N53351 10-45
N53352 10-45
N53360 10-45
N53363 4-29, 6-15, 19-23
N53364 , 6-7, 4-14, 19-21, 19-23
N53365 19-23
N53366 19-21, 19-23
N53367 19-21, 19-23
N53368 19-21, 19-23
N53369 19-21, 19-23
N53370 11-3
N53387 21-3, 21-5
N53388 21-3, 21-5
N53389 4-15
N53391 21-5
N53393 21-3, 21-5
N53394 21-3
N53395 21-3, 21-5
N53396 21-3
N53397 21-3, 21-5
N53398 21-3, 21-5
N53451 21-6
N53452 21-6
N53453 21-6
N53456 19-43, 19-53, 19-61
N53463 2-9, 2-11, 2-13, 2-21, 2-23, 2-25, 2-33, 2-35, 2-37
N53466 22-23, 22-25, 22-27
N53471 , 7-34, 7-35
N53478 22-15
N53480 19-41
N53481 19-21, 19-23
N53482 19-21, 19-23
N53484 17-23, 14-25, 16-23, 14-49, 16-47
N53490 20-5
N53491 15-17, 18-19
N53492 14-23, 14-30, 14-42, 16-21, 16-28, 16-40, 17-21, 18-19
N53493 , 14-3, 14-6, 14-9, 14-27, 14-30, 14-39, 16-3, 16-6, 16-9, 16-25, 16-28, 16-37, 14-42, 17-3, 17-6, 17-9, 16-40
N53494 14-16, 14-19, 17-23, 14-25, 16-12, 14-13, 16-15, 16-18, 16-23, 17-12, 17-15, 17-18, 17-23, 16-23
N53495 , 14-3, 14-6, 14-9, 14-27, 14-30, 14-39, 16-3, 16-6, 16-9, 16-25, 16-28, 16-37, 14-42, 17-3, 17-

6, 17-9, 16-40
N53496 14-16, 17-23, 14-25, 16-12, 14-13, 16-15, 17-12, 17-15, 16-23
N53498 12-5, 19-33
N53499 1-9, 1-11
N53521 22-9
N53522 22-13
N53526 22-3
N53527 22-11
N53528 22-13, 22-15
N53530 22-13, 22-15
N53532 22-13
N53536 1-9, 1-11
N53540 1-9, 1-11
N53569 21-3, 21-5
N53571 21-3, 21-5
N53577 21-3, 21-5
N53578 21-3, 21-5
N53579 21-3, 21-5
N53580 4-5
N53588 , 4-15
N53650 21-3, 21-5
N53651 21-3
N53652 21-3, 21-5
N53653 21-3, 21-5
N53654 21-3, 21-5
N53655 4-14, 6-7
N53660 , 4-14, 6-7
N53664 19-25, 19-35, 19-45, 19-55, 19-63, 19-65, 19-67, 19-69
N53665 6-7, 4-14, 19-21, 19-23
N53675 9-23, 22-51
N53679 12-51, 12-52
N53680 4-3, 4-5
N53681 12-43
N53682 12-50, 12-51, 12-52
N53683 12-50, 12-51, 12-52
N53685 4-3, 4-5
N53687 9-23, 22-51
N53690 22-33
N53691 22-33, 22-35
N53692 22-29, 22-31, 22-33, 22-35, 22-37, 22-39, 22-41
N53693 22-3
N53694 22-3
N53695 22-3
N53696 , 16-4, 16-10, 16-19, 16-26, 14-28, 16-29, 14-31, 16-32, 14-34, 16-35, 14-37, 16-38, 16-41, 16-44, 16-47, 16-47
N53697 22-17, 22-19, 22-21, 22-23, 22-25, 22-27
N53698 22-17, 22-19, 22-21, 22-23, 22-25, 22-27
N53699 22-17, 22-19, 22-21, 22-23, 22-25, 22-27
N53710 12-43
N53713 ii
N53714 ii
N53715 ii
N53716 ii
N53729 12-50, 12-51, 12-52, 13-17, 13-19
N53730 9-5
N53740 4-11, 4-13, 19-21
N53745 4-13
N53760 6-4, 6-5, 6-6
N53770 4-27, 4-31, 10-15, 10-17, 10-19, 10-21, 4-23, 10-23
N53775 4-11, 4-13, 19-21
N53780 4-11, 4-13, 19-21
N53820 4-23, 4-27, 4-31
N53878 4-21, 4-25, 6-14
N53879 4-21, 4-25, 6-14, 19-23
N53880 10-3, 10-5, 10-9, 10-11
N53881 20-14
N53884 20-9
N53885 20-9
N53886 20-9, 20-11, 20-14
N53887 20-14
N53888 20-14
N53889 8-15, 8-21, 8-23, 7-37, 22-29, 22-31, 22-33, 7-34, 22-35, 22-37, 7-39, 22-39, 22-41, 7-45, 22-5, 8-5, 7-13, 7-51, 7-53, 7-55, 7-57, 7-59, 7-61
N53890 22-10
N53896 6-14
N53913 12-41
N53914 12-41
N53917 9-24
N53918 9-24
N53920 9-24
N53932 13-3
N53940 7-37, 7-39
N53941 7-37, 7-39
N53942 7-37, 7-39
N54328 20-5
N54749 4-25
N55004 19-35
N55005 19-35, 19-39
N55006 19-37
N55007 19-35
N55008 19-37
N55009 19-35
N55011 19-35
N55013 19-35
N55014 19-35, 19-39
N55015 19-39
N55030 19-41, 19-48, 19-49
N55032 19-39
N55051 6-9
N55052 6-9
N55053 6-9, 6-15
N55061 6-7, 6-8
N55090 9-13
N55095 15-21, 14-59, 15-23, 14-61
N55100 4-11, 4-25
N55105 4-11
N55110 4-11
N55120 4-11, 4-14
N55125 4-25
N55130 4-27
N55134 4-25
N55135 1-23
N55136 1-23
N55140 4-25
N55145 4-21, 4-25, 6-14, 19-23
N55155 4-25
N55161 7-61
N55162 8-21, 8-23
N55164 22-17, 22-19, 22-21, 22-23, 22-25, 22-27
N55168 1-15, 1-17
N55169 , 14-19, 14-25, 14-16, 16-12, 16-13, 14-13, 16-15, 16-16, 16-18, 16-19, 16-23, 17-12, 17-13, 17-15, 17-16, 17-18, 17-19, 17-23, 18-13, 18-14
N55170 1-15
N55179 1-15, 1-17
N55191 9-25
N55192 19-39, 19-47, 19-57, 19-71, 19-73
N55196 1-15, 20-15, 1-17
N55197 14-6, 14-9, 15-6, 16-6, 16-9, 17-6, 17-9, 18-6, 18-10
N55202 6-8, 6-9, 6-10, 6-11
N55204 6-8, 6-9, 6-10, 6-11
N55206 4-15, 6-8, 6-9, 6-10, 6-11
N55207 6-8, 6-9, 6-10, 6-11
N55208 6-8, 6-9, 6-10, 6-11
N55209 6-8, 6-9, 6-10, 6-11
N55210 6-8, 6-9, 6-10, 6-11
N55211 6-8, 6-9, 6-10, 6-11
N55212 6-8, 6-9, 6-10, 6-11
N55213 6-8, 6-9, 6-10, 6-11
N55214 6-8, 6-9, 6-10, 6-11
N55215 6-8, 6-9, 6-10, 6-11
N55216 6-8, 6-9, 6-10, 6-11
N55217 6-8
N55218 6-8, 6-9, 6-10, 6-11
N55220 6-6, 6-7
N55221 6-9, 6-10, 6-11
N55225 6-8, 6-9, 6-10, 6-11
N55230 4-15
N55234 4-29, 6-15, 19-23
N55235 4-15, 6-8, 6-9, 6-10, 6-11, 19-21, 19-23
N55240 4-15, 6-8, 6-9, 6-10, 6-11, 19-21, 19-23
N55243 6-9
N55244 6-15
N55250 19-39
N55252 19-39
N55253 19-39
N55258 19-39, 19-45, 19-47, 19-55, 19-57
N55296 10-15, 10-21
N55297 10-15, 10-21
N55400 12-27
N55404 12-27, 12-29
N55406 12-27
N55408 12-27, 12-29
N55409 12-27, 13-9
N55410 12-27, 12-29
N55411 12-27, 12-29
N55412 12-31
N55415 12-31
N55419 12-31
N55430 12-31
N55435 12-31
N55440 12-27, 12-29
N55445 12-27, 12-29
N55449 12-27, 12-29
N55450 ii
N55451 ii
N55452 ii
N55453 ii
N55466 9-17
N55469 7-37, 7-39, 19-5, 19-7
N55484 7-53, 8-9
N55485 7-37, 7-39
N55486 7-37, 7-39
N55491 7-6
N55505 1-6, 1-7
N55506 1-19
N55509 1-19
N55514 2-31, 3-31
N55515 1-23
N55516 1-23
N55520 1-2, 1-3
N55521 1-4

N55525 9-13
N55530 1-2, 1-3
N55531 1-4
N55532 1-4
N55541 1-4
N55550 7-47, 7-49
N55551 7-47, 7-49
N55552 7-49
N55553 7-47
N55570 1-2
N55580 1-2
N55590 1-2
N55610 4-21, 4-23, 4-25, 4-27, 4-29, 4-31
N55670 12-43
N55672 12-37
N55675 12-25, 12-37
N55676 12-19, 12-27, 12-29, 12-39, 12-41, 13-3, 13-5, 13-7, 13-9, 13-15, 13-17, 13-19
N55677 12-19, 12-27, 12-39, 12-41, 13-3, 13-5, 13-7, 13-9, 13-15, 13-17, 13-19
N55678 12-25, 12-37
N55680 12-25, 12-37
N55682 12-25, 12-37
N55685 12-25, 12-37
N55691 22-4, 22-5
N55692 22-3
N55703 12-25, 12-37
N55704 12-11, 12-17, 12-25, 12-35, 12-37
N55705 12-25, 12-37
N55710 12-25, 12-37
N55715 12-25, 12-37
N55718 12-50, 12-51, 12-52, 13-15, 13-17, 13-19
N55735 12-25, 12-37
N55739 12-25, 12-37
N55771 7-37, 7-39
N55772 7-37, 7-39
N55773 7-37, 7-39
N55780 7-37
N55783 7-61, 8-21, 8-23
N55786 7-37, 7-39
N55799 ii
N55800 22-11
N55806 14-4, 14-7, 14-10, 14-23, 16-21, 17-4, 17-7, 17-10, 17-21
N55810 7-47
N55833 19-45, 19-55, 19-63, 19-65, 19-67, 19-69, 20-9, 20-11
N55840 21-3, 21-5
N55850 12-25
N55852 12-25, 12-37
N55855 12-25
N55858 12-37
N55860 12-37
N55862 12-25
N55863 12-25, 12-37
N55864 12-25
N55865 12-25
N55866 12-25
N55867 12-25
N55872 12-31
N55873 12-31
N55874 12-43, 12-45, 12-47, 12-49
N55884 12-41
N55889 12-45, 12-47, 12-49
N55890 12-39
N55891 12-45, 12-47, 12-49
N55892 12-45, 12-47, 12-49
N55895 12-45
N55896 12-45, 12-47
N55897 12-45, 12-47, 12-49
N55950 19-43, 19-45, 19-47, 19-53, 19-55, 19-57
N55951 19-47, 19-57, 19-71, 19-73
N55955 9-11
N55980 19-39
N55982 19-41, 19-48
N55984 19-41, 19-48, 19-49, 19-58, 19-74
N55985 19-41, 19-48, 19-49, 19-58, 19-74
N55988 19-41
N55989 19-41
N55991 4-3, 4-5
N55992 4-3, 4-5
N56061 14-3, 14-6, 14-9, 14-23, 14-27, 14-30, 14-39, 14-42, 16-3, 16-6, 16-9, 16-21, 16-25, 16-28, 16-37, 16-40, 17-6, 17-9, 17-21
N56063 14-3, 14-6, 14-9, 14-23, 14-27, 14-30, 14-39, 14-42, 16-3, 16-6, 16-9, 16-21, 16-25, 16-28, 16-37, 16-40, 17-6, 17-9, 17-21
N56067 19-5, 19-7
N56068 19-10, 19-11
N56076 21-3, 21-5
N56085 12-25, 12-37
N56091 12-45
N56092 12-25, 12-37
N56093 12-25, 12-37
N56100 12-41
N56105 12-45, 12-47, 12-49
N56129 12-51, 12-52
N56131 12-51, 12-52
N56132 12-43, 12-45, 12-47, 12-49, 12-50, 12-51, 12-52
N56133 12-43, 12-45, 12-47, 12-49
N56134 12-43, 12-45, 12-47, 12-49
N56142 12-9, 12-11, 12-15, 12-17
N56144 12-9, 12-11, 12-15, 12-17, 12-33, 12-35, 12-37
N56145 12-19, 13-3, 13-5, 13-7
N56166 22-3
N56180 , 16-4, 16-7, 16-10, 16-13, 16-16, 17-13, 17-16, 17-19, 16-19, 16-23
N56181
N56182
N56209 22-7, 22-17, 22-19, 22-21, 22-23, 22-25, 22-27
N56249 19-39
N56370 5-7, 5-8, 10-3, 10-5, 10-7, 10-9, 10-11, 10-13
N56371 5-7, 5-8, 10-3, 10-5, 10-7, 10-9, 10-11, 10-13
N56462 9-17
N56470 7-37, 7-39
N56471 7-37
N56472 7-37, 7-39
N56473 7-37, 7-39
N56474 7-37, 7-39
N56487 4-25
N56490 4-25
N56500 19-45, 19-55, 19-63, 19-65, 19-67, 19-69
N56501 19-45, 19-47, 19-55, 19-57
N56502 19-45, 19-47, 19-48, 19-49, 19-50, 19-55, 19-57, 19-58, 19-59
N56503 19-50, 19-59
N56504 19-48, 19-49, 19-50, 19-58, 19-59, 19-74
N56505 19-45, 19-47, 19-55, 19-57
N56507 19-45, 19-55, 19-63, 19-65, 19-67, 19-69
N56511 7-37, 7-39, 19-45, 19-47, 19-55, 19-57, 19-63, 19-65, 19-67, 19-69, 19-71, 19-73
N56512 19-45, 19-55, 19-63, 19-65, 19-67, 19-69
N56513 19-45, 19-50, 19-55, 19-59, 19-63, 19-65, 19-67, 19-69
N56517 19-48
N56519 19-45, 19-47, 19-48, 19-49, 19-55, 19-57, 19-58, 19-63, 19-65, 19-67, 19-69, 19-71, 19-73, 19-74
N56560 1-15, 1-17
N56573 7-37
N56574 7-37, 7-39
N56575 7-37, 7-39, 14-51, 14-53, 14-55, 14-56
N56600 ii
N56671 12-25
N56735 12-45, 12-47, 12-49
N56736 12-45, 12-47, 12-49
N56737 10-31, 10-33, 10-37, 10-39
N56745 9-15
N56747 4-32
N56748 19-5, 19-7, 19-35, 19-45, 19-55, 19-63, 19-65, 19-67, 19-69, 20-9, 20-11
N56749 19-5, 19-7, 19-35, 19-45, 19-55, 19-63, 19-65, 19-67, 19-69, 20-9, 20-11
N56750 19-5, 19-7, 19-35, 19-45, 19-55, 19-63, 19-65, 19-67, 19-69, 20-9, 20-11
N56891 7-39
N56892 7-39
N56895 7-61
N56900 19-51, 19-75
N56904 19-51, 19-75
N56945 12-31
N56949 19-45, 19-55, 19-63, 19-65, 19-67, 19-69
N56961 12-23
N57581 4-25
N58019 22-4, 22-5
N58091 4-23, 4-27, 4-31
N58100 19-51, 19-75
N58101 19-51, 19-75
N58105 13-11
N58109 22-3
N58110 19-45, 19-55, 19-63, 19-65
N58111 19-45, 19-55, 19-63, 19-65
N58112 19-45, 19-55, 19-63, 19-65, 19-67, 19-69
N58113 19-47, 19-57, 19-71, 19-73
N58114 19-47, 19-57, 19-71, 19-73
N58167 14-17, 16-15, 17-16

N58168 14-20, 14-34, 14-37, 14-46, 14-49, 16-18, 16-31, 16-34, 16-43, 16-46, 17-19
N58169 14-17, 14-20, 14-34, 14-37, 14-46, 14-49, 16-15, 16-18, 16-31, 16-34, 16-43, 16-46, 17-16, 17-19
N58170 14-17, 14-20, 14-34, 14-37, 14-46, 14-49, 16-15, 16-18, 16-31, 16-34, 16-43, 16-46, 17-16, 17-19
N58171 14-20, 14-34, 14-37, 14-46, 14-49, 16-19, 16-31, 16-34, 16-43, 16-46, 17-19
N58189 12-43
N58190 19-43, 19-45
N58303 11-5
N58316 , 12-29
N58317 , 17-21
N58320 22-23, 22-45, 19-47, 19-57, 22-17, 22-19, 22-21, 22-23, 22-25, 22-27, 19-71, 19-73
N58335 1-9, 1-11
N58340 14-23, 14-25, 14-28, 14-31, 14-36, 14-43, 14-48, 16-21, 16-23, 16-26, 16-29, 16-34, 16-41, 16-46, 17-21, 17-23
N58341 14-23, 14-25, 14-28, 14-31, 14-36, 14-43, 14-48, 16-21, 16-23, 16-26, 16-29, 16-34, 16-41, 16-46, 17-21, 17-23
N58342 14-23, 14-25, 14-31, 14-43, 16-21, 16-23, 16-29, 16-41, 17-21, 17-23
N58343 22-17, 22-19, 22-21, 22-23, 22-25, 22-27
N58349 13-11, 13-13, 13-19, 13-22, 14-27, 14-30, 14-34, 14-37, 14-39, 14-42, 14-46, 14-49, 16-25, 16-28, 16-32, 16-35, 16-37, 16-40, 16-44, 16-47
N58534 1-19
N58536 1-15, 1-17
N58537 1-15, 1-17
N58539 1-15
N58540 1-17
N58543 13-21
N58544 13-21
N58555 12-6, 12-7, 13-5, 13-7, 13-9, 13-13, 13-15, 13-17, 13-21, 14-4, 14-7, 14-10, 14-14, 14-17, 14-20, 16-3, 16-6, 16-9, 16-13, 16-16, 16-19, 17-4, 17-7, 17-10, 17-13, 17-16, 17-19
N58575 12-27, 12-29, 13-9, 13-11, 14-27, 14-30, 14-33, 14-36, 14-39, 14-42, 14-45, 14-48, 16-25, 16-28, 16-31, 16-34, 16-37, 16-40, 16-43, 16-46
N58576 13-11, 13-19, 14-27, 14-30, 14-34, 14-37, 14-39, 14-42, 14-46, 14-49, 16-25, 16-28, 16-31, 16-35, 16-37, 16-40, 16-44, 16-47
N58577 13-11, 14-30, 14-37, 16-28, 16-35
N58588 13-9, 13-11
N58590 13-9
N58601 13-9, 13-11
N58602 13-9
N58616 13-9, 13-11, 14-27, 14-30, 14-34, 14-37, 16-25, 16-28, 16-31, 16-35
N58617 12-45, 12-47, 12-49
N58618 14-27, 14-30, 14-33, 14-36, 14-39, 14-42, 14-45, 14-48
N58619 14-31, 14-36, 16-28, 16-34
N58620 16-25, 16-28, 16-31, 16-37, 16-40
N58621 13-11, 14-27, 14-30, 14-33, 14-36, 14-39, 14-42, 14-45, 14-48, 16-25, 16-28, 16-31, 16-34, 16-37, 16-40, 16-43, 16-46
N58642 13-11, 14-27, 14-30, 14-33, 14-36, 14-39, 14-42, 14-45, 14-48, 16-25, 16-28, 16-31, 16-34, 16-37, 16-40, 16-43, 16-46
N58643 14-31, 14-37, 14-49, 16-28, 16-35
N58651 19-15
N58652 19-15
N58653 19-15
N58655 19-15
N58656 19-15
N58658 19-15
N58659 19-15
N58668 7-47, 7-49
N58670 4-34, 14-4, 14-7, 14-10, 14-14, 14-17, 14-20, 14-23, 14-25, 14-34, 14-37, 14-46, 14-49, 16-13, 16-16, 16-19, 16-21, 16-23, 16-31, 16-34, 16-43, 16-46, 17-4, 17-7, 17-10, 17-13, 17-16, 17-19, 17-21, 17-23
N58671 14-4, 14-7, 14-10, 14-23, 16-21, 17-4, 17-7, 17-10, 17-21
N58677 14-28, 14-31, 14-34, 14-37, 14-40, 14-43, 14-46, 14-49, 16-26, 16-29, 16-32, 16-35, 16-38, 16-41, 16-44, 16-47
N58680 13-11
N58681 13-11, 14-28, 14-31, 14-37, 16-26, 16-29, 16-35, 16-37, 16-38, 16-40, 16-41
N58683 14-31, 16-29
N58684 14-28, 14-31, 14-40, 14-43, 16-26, 16-29, 16-38, 16-41
N58686 13-9, 13-11
N58691 19-15
N58692 19-15
N58693 19-15
N58694 19-15
N58765 20-5, 21-5
N58776 19-78
N58788 1-15, 1-17
N58789 1-15, 1-17
N58790 1-15, 1-17
N58819 12-27, 12-29
N58825 12-31
N58827 12-39, 12-41, 12-49
N58833 12-33, 12-35, 12-39
N58839 12-39, 12-41
N58840 12-25, 12-27, 12-29
N58842 12-43, 12-45, 12-47, 12-49
N58843 12-49
N58844 12-43, 12-45, 12-47, 12-49, 12-50, 12-51, 12-52
N58845 12-50, 12-51, 12-52, 13-15, 13-17, 13-19
N58870 4-3, 4-5, 4-21
N58879 4-3, 4-5
N58884 22-7, 22-17, 22-19, 22-21, 22-23, 22-25, 22-27
N58900 9-18, 22-46
N58937 1-15, 1-17
N58940 16-7, 17-16, 16-16
N58941 16-7, 17-16, 16-16
N58942 16-7, 17-16, 16-16
N58955 22-4, 22-5
N58959 19-49, 19-58, 19-74
N58963 19-45, 19-50
N58965 19-48, 19-49, 19-58, 19-74
N58971 10-48
N58972 10-48
N58973 10-48
N58975 4-25
N59000 22-15
N59001 22-15
N59002 , 16-4, 17-13, 16-13
N59003 , 16-4, 17-13, 16-13
N59004 , 16-4, 17-13, 16-13
N59005 22-15
N59006 22-15
N59010 19-19, 19-45, 19-50, 19-55, 19-63, 19-65, 19-67, 19-69, 19-77
N59012 19-45, 19-47, 19-55, 19-63, 19-65, 19-67, 19-69, 19-71, 19-73
N59022 12-27, 13-9
N59023 13-9, 13-11, 14-27, 14-30, 14-39, 14-42, 16-25, 16-28, 16-37, 16-40
N59024 13-9
N59025 16-4, 16-7, 16-10, 16-19, 16-23, 17-16, 17-19, 17-21, 17-23
N59028 13-5, 13-7, 13-9, 13-11, 13-15, 13-17, 13-19
N59029 22-7, 22-17, 22-19, 22-21, 22-23, 22-25, 22-27
N59075 4-11, 4-13, 4-23, 4-27, 4-31
N59870 14-13, 14-16, 14-19, 14-33, 14-36, 14-45, 14-48, 16-31, 16-34, 16-43, 16-46
N59884 20-11
N59885 20-11, 1-15, 1-17
N59895 9-7, 9-15, 22-15
N59962 19-45, 19-55, 19-

63, 19-65, 19-67, 19-69
N59974 1-15, 1-17, 20-11
N59986 7-47
N59991 7-53, 7-57, 7-59, 7-61
N59992 4-14, 4-15
N60160 19-15
N60161 19-15
N60170 19-15
N60258 16-4, 16-7, 16-10, 16-13, 16-16, 16-19, 16-26, 16-29, 16-32, 16-35, 16-38, 16-41, 16-44, 16-47, 16-48, 19-63, 19-65, 19-67, 19-69
N60290 10-3, 10-5, 10-7, 10-9, 10-11, 10-13, 10-15, 10-17, 10-19, 10-21, 10-23, 10-25
N60295 10-3, 10-5, 10-7, 10-9, 10-11, 10-13, 10-15, 10-17, 10-19, 10-21, 10-23, 10-25
N60311 22-17, 22-19, 22-21, 22-23, 22-25, 22-27
N60320 19-50, 19-59
N60321 19-50, 19-59
N60323 19-19, 19-45, 19-50, 19-55, 19-59, 19-63, 19-65, 19-67, 19-69
N60330 10-43
N60331 10-43
N60332 10-43
N60340 12-31
N60345 12-23
N60347 22-44
N60348 22-44
N60349 22-44
N60350 4-13, 4-15
N60360 7-47, 7-49
N60362 7-47, 7-49
N60385 6-3
N60390 6-3
N60395 6-3, 19-21, 19-23
N60417 19-45, 19-55, 19-63, 19-65, 19-67, 19-69
N60418 19-45, 19-55, 19-63, 19-65, 19-67, 19-69
N60431 22-44
N60432 22-44
N60433 22-44
N60435 22-44
N60550 4-11, 4-14
N60570 19-21, 19-23
N60571 19-21, 19-23
N60590 10-15, 10-21
N60591 10-15, 10-21
N60611 12-43
N60612 12-43
N60613 12-43
N60614 12-43
N60615 12-47, 12-49
N60616 12-50, 12-51, 12-52
N60617 12-43, 12-47, 12-49
N60618 12-43, 12-47, 12-49
N60620 12-47, 12-49
N60625 12-6, 12-7, 13-13, 13-15, 13-17, 13-19
N60641 12-43
N60642 12-45, 12-47
N60643 12-45, 12-47
N60644 12-49
N60645 12-49
N60646 12-43, 12-45, 12-47, 12-49
N60647 12-43
N60648 12-43
N60649 12-43, 12-45, 12-47, 12-49
N60755 19-21, 19-23
N60769 4-27
N60770 4-25
N60790 10-15, 10-21
N60791 10-15, 10-21
N60792 10-15, 10-21
N60797 14-56
N60798 22-45
N60799 22-45
N60800 12-43
N60801 12-50, 12-51
N60802 12-50, 12-51
N60803 12-43
N60804 12-43
N60806 12-50, 12-51
N60858 12-43
N60920 19-49
N60921 19-45, 19-50
N60937 12-11, 12-17, 12-25, 12-35, 12-37
N60938 12-41, 12-45
N60945 19-78
N60950 22-45
N60951 22-45
N60952 22-45
N60953 9-7
N60954 9-7
N60957 9-15
N60958 9-15
N60974 7-49
N60975 7-49
N60976 7-49
N60979 14-56
N60980 14-56
N60981 14-56
N60982 14-56
N60983 14-56
N60984 14-56
N60995 20-5
N62002 7-53, 8-21, 8-23, 22-35
N62003 7-51, 7-55, 8-11, 8-15, 22-31, 22-39
N62016 1-3
N62017 1-3
N62018 1-3
N62030 19-15
N62080 19-45, 19-55, 20-9, 20-11
N62084 19-45, 19-50
N62086 22-4, 22-23, 22-25, 22-27
N62087 22-4, 22-23, 22-25, 22-27
N62090 12-45, 12-47, 12-49
N62091 1-15, 1-17, 20-11
N62092 1-15, 1-17, 20-11
N62099 1-9, 1-11
N62217 7-62, 8-11, 8-24, 22-35
N62246 4-11, 4-13, 14-7, 14-10, 14-27, 14-30, 14-39, 14-42, 16-6, 16-9, 16-25, 16-28, 16-37, 16-40, 17-7, 17-10
N62290 12-41, 12-45, 12-49
N62299 13-15, 13-17, 13-19
N62321 12-43
N62327 12-43, 12-45, 12-47, 12-49, 12-50, 12-51, 12-52
N62349 12-41
N62351 10-37, 10-39
N62352 22-42
N62353 7-62
N62354 8-24
N62361 7-53, 8-7, 22-31, 22-35, 22-23, 7-51, 7-55
N62370 19-49, 19-58, 19-74
N62371 19-49, 19-58, 19-74
N62400 10-3, 10-9, 10-15, 10-21, 10-48
N62401 10-3, 10-9, 10-15, 10-21, 10-48
N62402 10-3, 10-9, 10-15, 10-21, 10-48
N62403 10-3, 10-9, 10-48
N62404 10-3, 10-9, 10-48
N62405 10-3, 10-9, 10-48
N62406 10-3, 10-9, 10-48
N62407 10-5, 10-11, 10-48
N62408 10-5, 10-11, 10-48
N62409 10-5, 10-11, 10-48
N62410 10-5, 10-11, 10-48
N62411 10-5, 10-7, 10-11, 10-13, 10-17, 10-23, 10-48
N62412 10-5, 10-7, 10-11, 10-13, 10-17, 10-19, 10-23, 10-25, 10-48
N62413 10-5, 10-7, 10-11, 10-13, 10-17, 10-19, 10-23, 10-25, 10-48
N62414 10-7, 10-13, 10-48
N62415 10-7, 10-13, 10-48
N62416 10-7, 10-13, 10-48
N62417 10-7, 10-13, 10-48
N62418 10-7, 10-13, 10-19, 10-25, 10-48
N62419 10-7, 10-13, 10-48
N62420 10-7, 10-13, 10-19, 10-25, 10-48
N62421 10-15, 10-21, 10-48
N62422 10-15, 10-21, 10-48
N62423 10-15, 10-17, 10-19, 10-21, 10-23, 10-25, 10-48
N62730 4-14
N62732 4-14
N62912 6-5, 6-6, 6-7, 6-8, 6-9
N62929 12-43, 12-45, 12-47, 12-49
N62940 19-15
N62941 19-15
N62942 19-15
N62943 19-15
N64001 12-45
N64023 7-37, 7-39
N64050 16-4, 16-7, 16-10, 16-13, 16-16, 16-19, 16-26, 16-29, 16-32, 16-35, 16-38, 16-41, 16-44, 16-47
N64083 12-45, 12-47, 12-49
N64084 12-45, 12-47, 12-49
N64085 12-49
N64090 12-39, 12-41, 12-43, 12-45, 12-47, 12-49
N64091 12-31
N64111 13-20, 13-21
N64142 14-53
N64235 12-45
N64500 19-58, 19-74
N64501 19-58, 19-74

N64502 19-58, 19-74
N64530 ii, 22-3
N64582 13-5, 13-7, 13-13, 13-15, 13-17, 13-19
N64583 , 13-3, 13-5, 13-7, 13-9, 13-13, 13-15, 13-17, 14-4, 14-7, 14-9, 13-11, 14-14, 14-17, 13-19, 14-20, 14-23, 14-25, 14-27, 14-30, 14-33, 14-36, 14-39, 14-42, 16-3, 16-6, 16-12, 16-15, 16-18, 16-21, 16-23, 16-25, 16-28, 16-31, 16-34, 16-37, 16-40, 16-43, 14-45, 16-48, 14-48, 17-4, 17-7, 17-13, 17-16, 17-19, 17-21, 17-23, 16-46, 22-45
N64584 14-27, 14-30, 14-33, 14-36, 14-39, 14-42, 14-45, 14-48, 16-25, 16-28, 16-31, 16-34, 16-37, 16-40, 16-43, 16-46
N64630 1-11
N64670 19-55, 19-59, 19-63, 19-65, 19-67, 19-69
N64671 19-55, 19-59, 19-63, 19-65, 19-67, 19-69, 19-77
N64746 4-11, 4-13, 19-21
N64789 19-47, 19-57, 19-71, 19-73, 22-3
N64800 3-27, 3-29, 3-31
N64801 3-3, 3-5, 3-7, 3-15, 3-17, 3-19, 3-27, 3-29, 3-31
N64802 3-27
N64803 3-29
N64804 3-31
N64810 3-15, 3-17, 3-19
N64811 3-3, 3-5, 3-7, 3-15, 3-17, 3-19, 3-27, 3-29, 3-31
N64812 3-15
N64813 3-17
N64814 3-19
N64820 3-3, 3-5, 3-7
N64823 3-5
N64824 3-7
N64830 3-9, 3-11, 3-13, 3-21, 3-23, 3-25, 3-33, 3-35, 3-37
N64831 3-9, 3-11, 3-13, 3-21, 3-23, 3-25, 3-33, 3-35, 3-37
N64832 3-33
N64833 3-35
N64834 3-37
N64840 3-9, 3-11, 3-13, 3-21, 3-23, 3-25, 3-33, 3-35, 3-37
N64850 3-9, 3-11, 3-13, 3-21, 3-23, 3-25, 3-33, 3-35, 3-37
N64853 3-11
N64854 3-13
N64870 1-17
N64871 1-17
N65056 19-58, 19-74
N65063 6-12
N65100 ii
N65101 ii
N65130 19-58, 19-74
N65131 10-52, 10-53
N65652 16-48
N65653 16-48
N65655 16-48
N65656 16-48
N65689 4-19
N65745 4-23, 4-27, 4-31
N65746 12-45, 12-47
N65795 12-49
N65796 12-45, 12-47
N65798 12-45, 12-47
N65810 16-4, 16-7, 16-10, 16-13, 16-16, 16-19, 16-26, 16-29, 16-32, 16-35, 16-38, 16-41, 16-44, 16-47
N65840 10-3, 10-5, 10-7, 10-9, 10-11, 10-13
N66053 16-4, 16-7, 16-10, 16-13, 16-16, 16-19, 17-4, 17-7, 17-10, 17-13, 17-16, 17-19, 17-23, 18-4, 18-7, 18-11, 18-14, 18-17, 18-21
N66140 10-51
N66141 10-51
N66175 10-52, 10-53
N66176 10-52
N66177 10-52
N66178 10-53
N66179 10-53
N66180 10-53
N66211 16-4, 16-7, 16-10, 16-13, 16-16, 16-19
N66407 3-38
N66423 10-3, 10-5, 10-7, 10-9, 10-11, 10-13
N66479 12-19, 13-3, 13-5, 13-7
N66506 10-52
N66507 10-52
N66508 10-53
N66509 10-53
N66510 10-53
N66516 10-52
N66517 10-52
N66518 10-53
N66519 10-53
N66520 10-53
N66556 10-52
N66557 10-52
N66558 10-53
N66559 10-53
N66560 10-53
N66662 10-53
N66663 10-53
N66665 3-38
N66672 10-53
N66673 10-53
N66896 22-3
N67030 19-63, 19-65, 19-67, 19-69, 19-71, 19-73, 19-74
N67031 19-63, 19-67, 19-71
N67032 19-63, 19-65, 19-67, 19-69, 19-71, 19-73
N67033 19-63, 19-67, 19-71
N67034 19-74
N67035 19-74
N67036 19-74
N67037 19-77
N67038 19-77
N67042 19-67, 19-69
N67043 19-67, 19-69
N67045 19-77
N67046 19-77
N67051 19-77
N67052 19-77
N67290 16-4, 16-7, 16-10, 16-13, 16-16, 16-19
N67615 19-65, 19-69, 19-73
N67771 4-32
N67775 4-32
N67798 19-77
N68000 19-63, 19-67, 19-77
N68001 19-77
N68002 19-77
N68003 19-75
N68004 19-75
N68005 19-75
N68275 12-31
N68530 4-11, 4-13
N68531 4-11, 4-13
N68947 19-49, 19-58, 19-74
N68948 19-49, 19-58, 19-74
N68949 19-49, 19-58, 19-74
N68950 19-61, 19-63, 19-65, 19-67, 19-69, 19-71, 19-73, 19-77
N69040 20-9, 20-11
N69050 1-15
N69148 5-7, 10-3, 10-5, 10-7, 5-8, 10-11, 10-13
N69202 14-27, 14-30, 14-34, 14-37, 14-39, 14-42, 14-46, 14-49, 16-25, 16-28, 16-32, 16-35, 16-37, 16-40, 16-44, 16-47
N69203 14-34, 16-32
N69204 14-34, 14-37, 14-46, 14-49, 16-32, 16-35, 16-47
N69207 14-37, 16-35
N69208 14-37, 16-35
N69209 14-37, 16-35
N69212 14-37, 16-35
N69213 13-11, 13-19, 14-28, 14-31, 14-34, 14-37, 14-40, 14-43, 14-46, 14-49, 16-26, 16-29, 16-32, 16-35, 16-38, 16-41, 16-44, 16-47
N69214 14-34, 14-37, 14-46, 14-49, 16-32, 16-35, 16-44, 16-47
N69217 14-34, 14-37, 14-46, 14-49, 16-32, 16-35, 16-44, 16-47
N69238 14-27, 14-30, 14-39, 14-42, 16-25, 16-28, 16-37, 16-40
N69239 14-28, 14-31, 14-34, 14-37, 14-40, 14-43, 14-46, 14-49, 16-26, 16-29, 16-32, 16-35, 16-38, 16-41, 16-44, 16-47
N69290 10-51
N69295 10-51
N69296 10-51
N69465 6-10
N69469 14-27, 14-30, 16-25, 16-28
N69479 13-11, 14-28, 14-31, 14-34, 14-37, 16-26, 16-29, 16-32, 16-35
N69550 12-49
N69613 6-10
N69650 4-21
N69655 4-21
N69656 4-21
N69659 4-21
N69669 14-62, 15-3, 15-

6, 15-9, 15-12, 15-17, 15-19, 16-3, 16-6, 16-9, 16-12, 16-15, 16-18, 16-21, 16-23, 17-3, 17-6, 17-9, 17-12, 17-15, 17-18, 17-23, 18-3, 18-6, 18-10, 18-13, 18-16, 18-19, 18-21
N69685 4-27
N69690 4-23, 4-27
N69691 14-34, 14-37, 14-46, 14-49, 16-32, 16-35, 16-44, 16-47
N69704 4-31
N69728 20-7
N69730 20-7
N69731 20-7
N69734 4-7
N69735 4-3, 4-7
N69737 20-11
N69992 13-22
N69994 13-22
N69996 13-22
N69998 13-22
N70529 20-7
N70815 4-21, 4-25, 6-14
N70860 , 12-6, 12-7, 13-15, 13-17, 13-19
N70871 21-6
N70881 21-6
N70884 , 21-3, 21-6
N71345 12-11, 12-35
N71350 12-11, 12-35
N71402 6-3
N71403 6-3
N71416 6-13, 6-14
N71417 6-13, 6-14
N71420 6-12
N71421 6-12
N71425 4-11, 4-13
N71428 6-11
N71430 6-15
N71445 21-5
N71469 6-11
N71470 6-11
N71471 6-11
N71473 6-11
N71474 6-9, 6-10, 6-11, 6-15
N71475 6-11
N71476 6-11
N71510 12-29, 13-11
N71512 20-11
N71520 4-13, 4-15
N71598 16-29
N71740 9-5, 9-13, 22-10
N71829 20-11
N71831 20-11
N71832 20-11
N71836 20-11
N71837 22-5, 22-17, 22-19, 22-21
N71849 22-5, 22-17, 22-19, 22-21
N71898 22-4
N71918 9-3, 9-11, 22-3, 22-7, 22-9
N72000 6-10
N72030 19-48, 19-49, 19-58, 19-74
N72100 19-5
N72101 19-5
N72102 19-5
N72105 7-37, 7-39, 19-5
N72111 19-21, 19-23
N72139 7-37, 7-39, 8-25, 12-56, 13-23, 14-51, 14-53, 14-55, 16-49, 22-52
N72140 , 7-39, 8-7, 8-11, 8-15, 8-23, 8-25, 7-37, 12-23, 8-25, 12-31, 12-56, 13-7, 13-23, 12-56, 14-51, 14-53, 14-55, 16-4, 16-7, 16-10, 16-13, 16-16, 16-19, 16-26, 16-29, 16-32, 16-35, 16-38, 16-41, 16-44, 16-47, 16-49, 22-31, 22-35, 22-39, 22-41, 22-52
N72160 10-53
N72163 10-52
N72166 10-52
N72169 10-53
N72172 10-53
N72184 6-10
N72187 6-10
N72188 6-10
N72189 6-10
N72270 19-5
N72320 19-74
N72339 7-47, 7-49
N72408 8-25, 13-23, 16-49, 22-52
N72409 8-25, 13-23, 16-49, 22-52
N72549 , ii, 9-11
N72996 10-52, 10-53
N73072 1-6, 1-7
N73162 21-5
N73163 21-5
N73164 21-5
N73311 9-5, 9-13, 22-10
N73327 4-11, 4-13, 19-21
N74140 19-21, 19-23
N74243 19-47, 19-57
N74244 19-48, 19-49, 19-58, 19-74
N74245 19-78

P

P7C616 1-4, 8-5, 1-5, 8-9, 1-9, 8-13, 3-19, 8-17, 8-19, 8-21, 9-23, 22-7, 19-17, 12-23, 22-29, 22-33, 22-37, 1-13, 22-41, 1-11, 3-15, 3-17, 3-27, 3-29, 3-31, 3-3, 3-5, 3-7, 9-18, 9-19, 12-21, 9-21, 12-31, 19-45, 22-46, 22-47, 22-49, 22-51, 19-55, 19-63, 19-65, 19-67, 19-69
P61D20 4-27, 4-31
P13185 8-5, 8-9, 8-13, 8-17, 8-19
P106023 4-23, 4-27, 4-31
P1318510 8-15, 4-27, 4-31, 7-61, 8-21, 8-23, 22-29, 22-33, 22-37, 22-41, 4-7, 4-9, 22-31, 22-35, 22-39, 5-9, 4-23, 7-51, 7-53, 7-55, 7-57, 7-59

R

R480034 , 4-3, 10-3, 10-5, 10-7, 10-9, 10-11, 10-13, 10-15, 10-17, 10-21, 10-23, 10-31, 10-37, 10-39, 10-53
R480055 10-3, 10-5, 10-7, 10-9, 10-11, 10-13, 10-15, 10-17, 10-19, 10-21, 10-23, 10-25, 10-31, 10-33, 10-37, 10-39
R480101 10-3, 10-5, 10-7, 10-9, 10-11, 10-13, 10-15, 10-17, 10-19, 10-21, 10-23, 10-25
R4800681 10-37, 10-39

S

S-747 10-26, 10-27
S-748 22-7, 9-7, 22-15, 7-51, 9-3, 7-14, 7-27, 7-31, 9-11, 22-9, 19-11, 9-15
S-751 1-15, 1-17, 1-19
S-752 7-55, 7-57, 8-5, 8-9, 7-51, 7-53, 7-59, 7-61, 8-5, 8-11, 8-13, 8-15, 8-17, 8-19, 8-21, 8-23, 22-29, 22-37, 22-31, 22-33, 22-35, 22-39, 22-41, 12-9, 12-11, 6-14, 12-15, 4-19, 12-33, 12-35
S-776 , 1-4, 1-5, 11-7, 11-9, 12-27, 12-29
S-951 5-3
S-1189 11-2, 12-19, 14-23, 15-17, 16-21, 17-21, 18-19
S-1191 4-25, 4-29
S-1197 4-25, 7-57, 7-59, 7-61, 1-15, 1-17, 4-21, 7-33, 7-43, 7-49, 12-9, 12-11, 12-15, 12-17, 12-25, 12-33, 12-37, 7-47, 12-35
S-1198 1-9, 10-46, 12-19, 19-12, 12-31, 22-15, 10-44, 8-2, 7-6, 1-11, 22-13, 7-14, 12-20, 12-27, 10-47, 12-5, 12-21, 12-23, 12-29, 19-31, 22-17, 22-19, 22-21, 22-23, 22-25, 22-27, 19-33, 22-43, 19-43, 19-53, 19-61
S-1199 12-20
S-1201 10-46, 10-47
S-1202 22-4, 22-5
S-1292 9-5, 9-13, 22-11
S-1299 7-8, 7-9, 7-13, 7-23, 7-43, 7-45, 7-51, 14-27, 14-30, 14-34, 14-37, 14-39, 14-42, 14-46, 14-49, 15-15, 16-25, 16-28, 16-31, 16-34, 16-37, 16-40, 16-43, 16-46
S-1302 12-23
S-1303 14-4, 14-7, 14-9, 14-13, 14-16, 14-19, 14-25, 15-4, 15-7, 15-9, 15-12, 15-19, 16-4, 16-7, 16-9, 16-12, 16-15, 16-18, 16-23, 17-3, 17-6, 17-9, 17-12, 17-15, 17-18, 17-21, 17-23, 18-3, 18-6, 18-11, 18-13, 18-16, 18-21
S-1311 4-19, 12-9, 12-15, 12-33
S-1344 7-43, 7-47, 7-49, 7-57, 7-59, 7-61
S-1379 15-15
S-1925 , 22-41, 1-5, 1-4, 8-3, 7-3, 11-7, 7-7, 11-9, 19-21, 19-23, 22-29, 22-31, 22-33, 22-35, 22-37, 22-39
S-4747 20-9, 20-11
S-4781 7-14, 9-3, 9-11, 19-11
S-5777 8-17, 8-21, 8-23, 22-29, 22-31, 22-37, 22-39
S10730 8-5, 8-9, 8-13, 8-17, 7-37, 7-41, 7-43, 7-

49, 11-2, 8-7, 8-11, 8-15, 8-19, 8-21, 8-23, 22-29, 22-33, 22-37, 22-41, 22-5, 7-13, 22-31, 22-35, 7-39, 22-39, 7-45, 7-47
S10954 7-37, 7-39, 7-45, 7-47, 7-49, 7-51, 7-53, 7-57, 7-59, 7-61, 8-5, 8-7, 8-9, 8-11, 8-13, 8-15, 8-17, 8-19, 8-21, 8-23, 22-29, 22-31, 22-33, 22-35, 22-37, 22-39, 22-41
S10955 7-37, 7-39, 7-45, 7-47, 7-49, 7-51, 7-53, 7-57, 7-59, 7-61, 8-5, 8-7, 8-9, 8-11, 8-13, 8-15, 8-17, 8-19, 8-21, 8-23, 22-29, 22-31, 22-33, 22-35, 22-37, 22-39, 22-41
S13317 14-61, 15-23
S13336 19-12, 18-16, 19-17, 19-18, 14-13, 14-16, 14-19, 15-9, 15-12, 14-33, 14-37, 14-45, 14-49, 16-12, 16-15, 16-18, 16-31, 16-34, 16-43, 17-12, 18-13, 17-15, 17-18, 19-19, 16-46
S13337 13-11, 14-4, 14-7, 14-9, 14-13, 14-16, 18-16, 14-19, 14-33, 14-36, 14-45, 15-4, 15-7, 15-12, 14-48, 15-9, 16-12, 16-15, 16-18, 16-31, 16-34, 16-43, 17-3, 17-6, 17-9, 17-12, 17-15, 17-18, 16-46, 18-3, 18-6, 18-11, 18-13
S22403 14-16, 14-19, 14-34, 14-37, 14-46, 14-49, 16-15, 16-18, 16-31, 16-34, 16-43, 16-46, 17-15, 17-18
S22406 13-5, 13-7, 13-13, 13-15, 13-17, 13-19
S27987 4-25, 4-27, 4-31, 2-33, 12-19, 10-44, 10-45, 10-46, , 2-9, 2-11, 2-13, 1-13, 1-17, 2-21, 1-21, 2-23, 1-23, 12-23, 3-25, 2-25, 2-35, 2-37, 12-39, 12-41, 3-15, 3-17, 3-19, 3-21, 3-23, 3-31, 3-29, 3-3, 3-5, 3-7, 3-9, 3-11, 3-13, 3-27, 3-33, 3-35, 3-37, 12-9, 12-11, 12-15, 12-17, 12-21, 4-21, 4-23, 12-25, 12-27, 12-29, 4-29, 12-33, 12-35, 12-37, 10-47, 13-9, 13-11
S28159 3-38
S29841 13-3, 13-4, 13-5, 13-7
S29960 15-15
S29961 15-15
S29967 13-13, 14-59, 13-15, 13-17, 13-19, 14-61, 22-23, 15-23, 22-25, 22-27
S31476 13-11, 14-7, 14-9, 14-17, 14-20, 14-27, 14-30, 14-34, 14-37, 14-39, 14-42, 14-46, 16-7, 16-9, 16-16, 16-19, 16-25, 16-28, 16-31, 16-34, 16-37, 16-40, 16-43, 14-49, 17-7, 17-9, 17-16, 16-46, 18-10, 17-19
S31980 1-15, 1-17
S32590 4-29
S33404 4-7
S33420 9-13, 22-7, 9-18, 10-26, 10-27, 22-5, 22-10, 22-46
S33598 9-7, 22-15, 9-15
S33883 12-19
S34115 13-13, 13-15, 14-59, 13-17, 13-19, 15-23, 14-61
S37661 14-13, 14-16, 14-19, 14-33, 14-36, 14-45, 14-48, 15-9, 15-12, 16-12, 16-15, 16-18, 16-31, 16-34, 16-43, 16-46, 17-12, 17-15, 17-18, 18-13, 18-16
S37662 14-13, 14-16, 14-19, 14-33, 14-36, 14-45, 14-48, 15-9, 15-12, 16-12, 16-15, 16-18, 16-31, 16-34, 16-43, 16-46, 17-12, 17-15, 17-18, 18-13, 18-16
S37663 14-13, 14-16, 14-19, 14-33, 14-36, 14-45, 14-48, 15-9, 15-12, 16-12, 16-15, 16-18, 16-31, 16-34, 16-43, 16-46, 17-12, 17-15, 17-18, 18-13, 18-16
S37664 14-13, 14-16, 14-19, 14-33, 14-36, 14-45, 14-48, 15-9, 15-12, 16-12, 16-15, 16-18, 16-31, 16-34, 16-43, 16-46, 17-12, 17-15, 17-18, 18-13, 18-16
S39503 14-59, 15-15, 13-15
S39505 14-51, 14-53, 14-55
S39506 14-59, 14-21, 13-15
S39537 22-17, 22-19, 22-21, 22-23, 22-25, 22-27
S39538 13-15, 13-17, 13-19
S39539 22-17, 22-19, 22-21, 22-23, 22-25, 22-27
S39545 4-32
S39549 19-18
S39559 12-9, 12-11, 12-25
S39569 4-23, 4-27, 4-31
S39780 4-11, 4-13, 19-21
S39948 19-18
S39949 19-18
S40579 4-23, 4-27, 4-31
S42294 7-7, 7-51, 7-53, 7-55, 7-57, 7-59, 7-61, 7-62
S42354 10-3, 10-5, 10-7, 10-9, 10-11, 10-13
S42784 4-32
S42967 16-4, 22-17, 22-23
S42969 13-11, 14-59, 14-61, 15-21, 15-23, 16-4, 22-17, 22-19, 22-21, 22-23, 22-25, 22-27
S42998 19-19
S44353 16-7, 16-10, 16-16, 16-19, 22-23, 22-25, 16-26, 16-29, 16-32, 16-35, 16-38, 16-41, 16-44, 22-17, 22-19, 22-21, 16-44, 16-47
S44370 5-6, 5-7
S44449 4-25, 4-29
S44456 14-13, 14-16, 14-19, 14-33, 14-36, 14-45, 14-48, 16-12, 16-15, 16-18, 16-31, 16-34, 16-43, 16-46, 17-12, 17-15, 17-18
S44715 4-11, 4-13, 19-21
S44750 5-5
S44755 5-5
S44760 5-5
S44789 5-4
S44791 5-4
S45280 9-5, 9-13, 22-11
S46506 5-7
S47110 12-19, 12-27, 12-29
S47395 1-15, 1-17
S47799 16-4, 16-7, 16-13, 16-16, 22-25, 22-17, 22-19, 22-21, 22-23, 22-25
S48883 16-4, 16-13
S49514 1-9, 1-11
S51353 5-8
S51464 12-27
S51466 9-23, 22-51
S53814 4-23, 4-27, 4-31
S53816 4-23, 4-27, 4-31
S54297 19-19
S54298 19-19
S55035 5-7, 5-8
S55040 5-7
S55045
S56135 5-4, 5-5, 5-6, 5-7, 5-8
S56558 19-19
S64310 4-7, 4-9, 4-11, 4-13
S64940 19-77
S65380 16-4, 16-7, 16-10, 16-13, 16-16, 16-19, 16-26, 16-29, 16-32, 16-35, 16-38, 16-41, 16-44, 16-47
S65419 14-37, 16-35
S65742 4-7, 4-9, 4-11, 4-13
S67388 4-7, 4-9, 4-11
S68006 19-77
S72094 19-77
S72190 19-77
S72200 19-77
S72292 19-77

T

T-5276 4-3, 4-21

W

W-131 7-4, 9-3, 22-7, 12-9, 12-11, 9-11, 12-15, 22-9, 12-17
W-187 , 2-3, 20-15, 12-19, 12-39, 12-41, 10-44, 10-45, 10-46, 1-4, 1-5, 1-6, 1-7, 2-15, 1-21, 1-23, 2-17, 2-19, 3-5, 3-7, 3-15, 3-17, 3-19, 3-27, 2-27, 3-29, 2-29, 3-31, 2-31, 3-3, 7-11, 12-21, 12-27, 10-43, 10-47, 12-29, 19-47, 19-53, 19-55, 19-57, 19-61, 19-63, 19-65, 19-67, 19-69, 19-71, 19-73, 19-77
W-469 1-9, 7-37, 7-57, 7-59, 9-7, 8-15, 8-23, 7-23, 7-33, 7-53, 7-61, 8-7, 8-11, 8-24, 10-29, 9-5, 9-9, 9-13, , 22-15, 18-16, 22-31, 10-33, 22-35, 19-35, 10-37, 22-39, 12-

39, 22-42, 14-59, 5-6, 7-39, 7-14, 9-15, 9-17, 10-51, 10-53, 12-3, 13-5, 12-5, 13-7, 13-9, 13-11, 13-15, 13-17, 13-19, 12-21, 14-61, 14-4, 14-7, 14-10, 14-13, 14-16, 14-19, 14-33, 14-36, 15-4, 15-7, 15-9, 15-12, 14-45, 14-48, 16-12, 16-15, 15-15, 16-18, 15-23, 16-31, 16-34, 17-3, 17-6, 17-12, 17-15, 16-43, 16-46, 18-4, 18-7, 17-9, 19-11, 18-11, 18-13, 17-18, 19-25, 19-28, 19-31, 19-33, 19-37, 19-43, 19-45, 19-47, 19-53, 19-55, 19-57, 19-67, 22-11, 19-61, 19-63, 19-65, 19-69, 19-71, 19-73
W-470 10-46, 10-47, 19-21, 19-23
W-471 7-53, 7-57, 7-59, 7-61, 11-2, 16-7, 17-4, 16-4, 16-10, 17-21, 18-7, 17-7, 17-10, 18-4, 18-11, 19-21, 19-23
W-472 1-9, 12-39, 1-11, 12-41
W-473 12-19, 5-6, 12-27, 12-29, 15-15
W-475 , 7-62, 7-4, 7-37, 7-51, 7-53, 7-55, 7-57, 7-59, 7-61, 8-15, 8-23, 7-2, 20-14, 7-19, 7-21, 7-23, 7-25, 7-27, 12-39, 8-7, 22-31, 22-35, 22-39, 22-42, 3-3, 3-5, 3-7, 5-8, 1-13, 3-15, 2-15, 1-15, 3-17, 2-17, 1-17, 3-19, 2-19, 1-19, 3-27, 2-27, 3-29, 2-29, 3-31, 2-31, 4-34, 9-3, 5-7, 7-39, 11-7, 11-9, 9-11, 10-33, 10-37, 10-39, 10-51, 12-15, 12-9, 12-11, 12-17, 12-21, 12-25, 12-33, 12-35, 12-37, 14-27, 14-30, 14-34, 14-37, 14-39, 14-42, 14-46, 16-25, 16-28, 16-32, 16-35, 16-37, 14-49, 16-40, 16-44, 19-45, 16-47, 19-55, 19-67, 19-69, 20-5, 20-7, 20-9, 20-11, 22-49, 19-63, 19-65
W-476 12-23, 4-5, 12-31
W-477 22-7, 1-9, 12-19, 1-13, 1-15, 1-19, 1-11, 7-14, 1-17, 9-3, 13-9, 9-11, 12-27, 14-9, 16-3, 16-6, 14-6, 14-27, 14-39, 17-3, 16-9, 16-25, 16-37, 17-6, 17-9, 18-10, 22-9, 19-11
W-478 , 1-13, 1-15, 1-19, 1-17, 7-27, 4-34, 7-47, 7-31
W-479 10-3, 10-15, 10-17, 12-19, 10-19, 10-21, 10-23, 10-25, 12-39, 12-41, 19-7, 12-27, 13-3, 13-5, 13-7, 13-9, 13-11, 13-15, 13-17, 12-29, 14-6, 14-9, 14-13, 14-16, 14-19, 13-19, 15-3, 14-3, 15-9, 15-12, 16-3, 15-6, 17-3, 17-6, 16-6, 18-6, 18-3, 19-5
W-480 3-25, 7-51, 4-3, 3-9, 3-11, 3-13, 1-17, 3-21, 3-23, 3-33, 3-35, 3-37, 12-9, 12-11, 12-15, 12-17, 12-33, 4-34, 12-35, 19-77
W-481 , 14-59, 13-11, 4-32, 15-23, 14-61
W-484 1-9, 1-11
W-485 12-19, 12-27, 12-29
W-486 , 1-13, 1-21, 1-23
W-487 1-3, 1-19, 1-21, 12-41, 1-23
W-488 8-5, 8-7, 8-9, 8-13, 8-15, 8-17, 8-19, 8-21, 8-23, 11-5, 22-29, 11-9, 22-31, 22-33, 22-35, 22-37, 22-39, 22-41
W-489 12-25, 12-33, 12-35, 12-37
W-490 10-15, 10-17, 10-19, 10-21, 10-23, 10-25
W-491 4-34, 12-25, 12-33, 12-35, 12-37
W-492 1-4, 1-5, 12-9, 12-11, 12-15, 12-17
W-493 4-16
W-494 12-9, 12-11, 12-15, 12-17
W-495 4-3
W-496 22-41, 7-3, 4-7, 7-7, 8-3, 19-23, 19-21, 22-29, 22-31, 22-33, 22-35, 22-37, 22-39
W-497 12-9, 12-11, 12-15, 12-17, 19-17, 12-25, 12-33, 12-37, 12-35, 20-5
W-498 4-27, 4-31, 7-51, 7-8, 7-9, 4-23, 12-25, 12-37
W-499 1-13, 1-15, 1-17, 4-3, 4-16, 7-14
W-501 , 4-3, 22-5, 4-16
W-502 7-11, 7-13, 7-19, 7-23, 7-27, 7-31, 7-41, 7-43, 7-45, 7-47, 7-49, 7-53
W-503 7-23, 7-45, 7-53, 12-25, 12-33, 12-35, 12-37
W-505 4-21, 4-25
W-506 12-9, 12-11, 12-15, 12-17, 12-25, 12-33, 12-35, 12-37
W-509 4-3, 4-5, 4-9, 4-11, 4-13, 4-29
W-510 12-25, 12-33, 12-35, 12-37
W-512 9-7, 9-5, 9-13, 9-17, 10-29, , 22-15, 18-16, 12-19, 10-27, 10-31, 10-33, 10-35, 12-39, 10-41, 14-59, 5-6, 22-13, 9-15, 4-34, 12-3, 12-5, 12-27, 12-29, 10-43, 13-5, 13-7, 13-9, 14-10, 13-11, 14-13, 13-15, 14-16, 13-17, 14-19, 13-19, 14-23, 14-25, 14-61, 15-4, 14-4, 15-7, 14-7, 14-33, 14-36, 14-45, 14-48, 15-9, 16-12, 15-12, 16-15, 15-15, 16-18, 16-23, 15-23, 17-12, 17-15, 17-21, 16-21, 17-23, 16-31, 16-34, 16-43, 16-46, 17-4, 17-6, 18-7, 17-10, 17-18, 18-4, 18-11, 18-13, 19-25, 19-28, 19-31, 19-33, 19-43, 22-5, 20-9, 22-11, 20-11, 22-17, 22-19, 22-21, 22-23, 22-25, 22-27, 19-53, 19-61
W-513 9-23, 11-2, 18-16, 5-6, 9-18, 9-19, 13-5, 13-7, 12-7, 13-9, 13-13, 13-15, 13-17, 9-21, 14-4, 14-7, 14-10, 13-11, 14-13, 14-16, 14-19, 13-19, 14-25, 14-33, 14-36, 15-4, 15-7, 15-9, 15-12, 14-45, 14-48, 16-4, 16-7, 16-9, 16-12, 16-15, 15-15, 16-18, 15-19, 16-23, 16-31, 16-34, 17-6, 17-10, 17-12, 17-15, 17-18, 17-23, 16-43, 16-46, 18-4, 17-4, 18-7, 18-11, 18-13, 18-16, 18-21, 22-46, 22-47, 22-49, 22-51
W-514 , 7-4, 7-19, 8-5, 8-9, 7-23, 7-43, 7-49, 7-51, 7-57, 7-59, 7-61, 8-13, 8-15, 8-17, 8-19, 8-21, 8-23, 9-23, 7-2, 7-7, 7-11, 19-12, 19-17, 7-21, 7-23, 7-25, 7-33, 12-39, 7-39, 7-41, 8-7, 22-13, 20-14, 22-15, 20-15, 19-17, 19-18, 22-29, 22-37, 1-13, 1-15, 1-19, 22-31, 22-33, 22-35, 22-39, 22-41, 4-3, 3-3, 3-5, 5-7, 3-7, 5-8, 3-15, 2-15, 3-17, 2-17, 1-17, 3-19, 2-19, 1-21, 1-23, 7-27, 3-27, 2-27, 3-29, 2-29, 3-31, 2-31, 7-45, 7-47, 7-31, 7-39, 7-8, 7-9, 7-11, 7-13, 9-18, 9-19, 9-21, 10-43, 12-3, 12-5, 10-51, 14-4, 13-5, 14-7, 13-7, 13-9, 14-10, 13-15, 13-17, 14-27, 14-30, 14-34, 14-37, 14-39, 14-42, 17-4, 15-4, 15-7, 17-10, 15-15, 16-25, 16-28, 16-32, 16-35, 16-37, 16-40, 16-44, 14-46, 16-47, 14-49, 18-4, 17-6, 18-7, 22-11, 18-11, 22-17, 22-19, 22-21, 22-23, 22-25, 19-25, 22-27, 19-28, 19-31, 19-33, 19-43, 22-46, 22-47, 22-49, 19-50, 22-51, 19-53, 19-59, 19-61
W-516 4-27, 4-31, 7-49, 8-5, 8-9, 4-15, 7-43, 8-13, 8-15, 8-17, 8-19, 7-41, 8-3, 8-7, 8-9, 8-11, 8-13, 8-21, 8-23, 11-2, 12-19, 10-21, 12-23, 10-23, 22-29, 22-33, 22-37, 12-41, 14-59, 1-13, 22-31, 22-35, 22-39, 22-41, 11-7, 4-7, 1-21, 4-23, 1-23, 7-45, 7-47, 11-9, 12-33, 12-25, 12-31, 12-37, 12-27, 12-35, 12-29, 14-61, 20-5, 22-11, 15-17, 18-19, 17-21, 16-21, 15-23, 14-23
W-517 4-31, 4-15, 7-19, 7-23, 4-27, 7-34, 7-37, 7-55, 7-57, 7-43, 7-49, 7-51, 7-53, 7-59, 7-61, 4-3, 5-5, 4-5, 5-6, 5-7, 4-7, 7-7, 5-8, 4-9, 7-11, 1-13, 4-16, 19-17, 7-19, 7-21, 4-23, 7-27, 7-31, 7-45, 7-47, 14-59, 7-5, 7-8, 7-9, 7-11, 7-39, 12-9, 7-13, 7-14, 12-15, 12-33, 12-

37, 12-11, 12-25, 12-17, 12-35, 14-61, 22-5, 15-23
W-518 4-3, 4-5, 4-7, 4-9, 4-13, 4-29, 7-37, 5-5, 4-11, 4-21, 5-6, 10-43, 12-9, 12-11, 12-15, 12-17, 12-25, 12-33, 12-35, 12-37
W-520 4-5, 4-25, 5-4, 5-6, 5-7, 4-7, 5-8, 4-9, 4-29
W-521 9-7, 1-9, 10-29, 9-5, 9-13, , 22-15, 18-16, 12-19, 10-27, 10-31, 10-39, 12-39, 14-59, 5-6, 9-15, 4-34, 10-43, 12-3, 13-5, 12-5, 13-7, 12-27, 12-29, 14-4, 14-7, 13-9, 14-10, 13-11, 14-13, 13-15, 14-16, 13-17, 14-19, 13-19, 14-23, 14-25, 14-61, 15-4, 15-7, 15-12, 14-33, 14-36, 14-45, 14-48, 15-9, 16-12, 16-15, 15-15, 16-18, 16-21, 16-23, 15-23, 16-31, 17-3, 17-6, 17-12, 17-15, 17-21, 17-23, 16-34, 16-43, 16-46, 17-10, 18-11, 18-13, 17-18, 18-4, 18-7, 19-25, 19-28, 19-31, 19-33, 19-43, 19-53, 19-61, 20-9, 22-11, 20-11
W-522 9-23, 11-2, 18-16, 11-3, 12-6, 13-5, 5-6, 12-7, 9-18, 9-19, 9-21, 13-7, 13-9, 13-11, 14-13, 13-13, 13-15, 14-16, 13-17, 14-19, 13-19, 14-25, 15-4, 14-4, 15-7, 14-7, 14-10, 14-33, 14-36, 14-45, 14-48, 16-9, 15-9, 16-12, 15-12, 16-15, 15-15, 16-18, 15-19, 17-3, 16-4, 17-6, 16-7, 17-12, 17-23, 16-23, 16-31, 16-34, 16-43, 16-46, 18-4, 18-7, 17-10, 17-15, 18-16, 17-18, 18-13, 18-11, 18-13, 22-19, 22-21, 18-21, 22-46, 22-47, 22-49, 22-51
W-523 , 7-4, 8-5, 8-9, 8-13, 7-19, 7-23, 7-37, 7-43, 7-49, 7-51, 7-57, 7-59, 7-61, 8-15, 8-17, 8-19, 8-21, 9-23, 8-23, 5-3, 7-2, 7-7, 7-11, 19-12, 19-17, 12-19, 7-19, 7-21, 7-23, 7-25, 7-33, 12-39, 7-39, 7-41, 8-5, 22-7, 20-14, 20-15, 19-18, 22-29, 22-31, 22-33, 22-37, 22-41, 1-13, 1-15, 1-17, 1-19, 1-21, 1-23, 22-35, 22-39, 4-3, 3-3, 3-5, 5-7, 3-7, 5-8, 3-15, 2-15, 3-17, 2-17, 3-19, 2-19, 7-27, 3-27, 2-27, 3-29, 2-29, 7-31, 3-31, 2-31, 7-39, 7-45, 7-47, 7-9, 7-39, 7-8, 7-11, 7-13, 9-18, 9-3, 9-11, 9-19, 9-21, 12-3, 11-7, 11-9, 10-43, 10-51, 13-5, 12-5, 14-4, 14-7, 13-7, 13-9, 14-10, 13-15, 13-17, 14-27, 14-30, 14-34, 14-37, 14-39, 14-42, 14-46, 14-49, 17-3, 15-4, 17-6, 15-7, 17-10, 15-15, 16-25, 16-28, 16-32, 16-35, 16-37, 16-40, 16-44, 16-47, 18-4, 18-7, 18-11, 22-9, 22-11, 22-17, 22-19, 22-21, 22-23, 22-25, 19-25, 22-27, 19-28, 19-31, 19-33, 19-43, 22-46, 22-47, 22-49, 19-50, 22-51, 19-53, 19-59, 19-61
W-525 1-3, 1-9, 4-27, 4-31, 7-43, 7-49, 7-51, 8-5, 8-9, 8-13, 8-15, 8-17, 8-19, 8-21, 8-23, 7-41, 11-2, 8-3, 8-5, 8-7, 8-9, 8-11, 8-13, 12-23, 12-41, 10-21, 22-29, 22-31, 22-33, 22-35, 22-37, 22-39, 22-41, 14-59, 4-7, 1-11, 1-13, 1-21, 1-23, 11-7, 7-8, 11-9, 7-9, 4-23, 7-45, 7-47, 12-19, 12-33, 12-25, 12-31, 12-37, 12-27, 12-35, 12-29, 15-17, 18-19, 17-21, 16-21, 15-23, 14-23, 14-61
W-526 4-31, 4-15, 7-19, 7-23, 4-27, 7-43, 7-49, 7-53, 7-55, 5-3, 5-4, 19-17, 14-59, 4-3, 5-5, 4-5, 5-6, 5-7, 4-7, 5-8, 4-9, 1-13, 4-16, 4-23, 7-11, 7-27, 7-31, 7-45, 7-47, 12-9, 7-13, 7-14, 12-15, 12-33, 12-37, 12-11, 12-25, 12-17, 12-35, 14-61, 22-5, 15-23
W-527 4-3, 4-5, 4-7, 4-9, 4-11, 4-13, 4-15, 4-29, 7-37, 4-21, 5-5, 5-6, 12-9, 12-11, 12-15, 12-17, 12-25, 12-33, 12-37, 10-43, 12-35
W-528 9-3, 9-11
W-532 4-19
W-535 4-25, 4-29
W-538 4-27, 19-7, 12-39, 12-41, 1-13, 22-13, 1-15, 22-15, 1-17, 4-31, 13-3, 9-3, 13-5, 13-7, 13-9, 9-11, 13-15, 4-23, 14-3, 14-6, 14-9, 13-11, 14-13, 14-16, 13-17, 14-19, 13-19, 14-27, 14-30, 14-34, 14-37, 14-39, 14-59, 14-61, 15-3, 15-9, 15-12, 14-42, 14-46, 14-49, 16-3, 16-6, 15-6, 16-9, 16-12, 16-15, 16-18, 15-21, 15-23, 16-25, 16-28, 16-31, 16-34, 16-37, 17-3, 17-6, 17-9, 17-12, 16-40, 16-43, 16-46, 18-3, 18-6, 17-15, 17-18, 18-14, 18-17, 19-5, 18-10
W-539 1-3, 1-13, 20-5
W-542 19-43, 19-45
W-554 22-7
W-558 12-15, 12-17, 12-25, 12-33, 12-35, 12-37, 12-39
W-619 11-2
W-629 1-15, 1-17
W-793 7-34, 7-5, 1-13, 7-37, 7-39, 7-51, 7-53, 7-55, 7-57, 7-59, 7-61
W-867 19-17, 10-26, 10-33, 10-39, 10-27
W-1416 12-9, 12-11
W-1552 9-9, 9-17, 11-2, 19-12, 12-31, 10-33, 10-39, 11-3, 22-13, 22-15, 10-51, 10-53, 12-20, 12-23, 20-9, 20-11, 12-21
W-1553 4-3, 4-7, 4-25, 5-6
W-1628 12-15, 12-17, 12-25, 12-33, 12-35, 12-37
W-1663 7-27, 7-31, 7-43, 7-45, 7-47, 7-51, 7-53, 7-55
W-1847 12-3, 12-5, 19-25, 19-28, 19-31, 19-33, 19-43, 19-53, 19-61
W-1854 7-19, 7-23, 4-25, 4-27, 4-31, 7-11, 4-21, 4-23, 7-27, 4-29, 7-31, 7-53
W-3687 4-27, 4-31, 7-37, 7-19, 4-23, 7-39
W-4181 4-7, 6-12, 6-14, 12-15, 12-17, 12-25, 12-33, 12-35, 12-37, 12-39
W-4187 12-9, 12-15, 12-33
W14399 9-19, 22-47
W14434 12-11, 12-17, 12-25, 12-35, 12-37
W14504 12-21, 12-23, 12-31
W14899 1-9, 1-11
W21476 9-3, 9-11
W21962 13-13, 13-15, 14-61, 13-17, 13-19

www.morris-industries.com

1891 Albert Street North,
Regina, Saskatchewan
S4R 8R7 Canada
Phone: 306-933-8585
Fax: 306-933-8626

It is the policy of Morris Equipment Ltd. to improve its products whenever it is possible to do so. Morris reserves the right to make changes or add improvements at any time without incurring any obligation to make such changes on machines sold previously.

Printed in Canada

February 2024