MORRIS

Parts Manual



QUANTUM

Part Number S66247-06D

IMPORTANT:

ALL ITEMS ARE IDENTIFIED WITH A PART NUMBER. Some of the smaller parts such as bolts, nuts, washers, etc. are not all shown, however, the quantity used are listed in the text for that section which they fit into. That particular quantity is always the quantity required for one complete assembly.

Smaller parts, which are welded together to construct a larger part, are not to be ordered as individual pieces, unless they have a part number to identify them.

Contact your nearest dealer for genuine repair parts. Dealers carry ample stock and are backed by the manufacturer and regional associations.

Powder Paint Introduced in 2022:

Quantum

40 – QT40220510 and newer using powder.

50 – QT50220587 and newer using powder.

60 – QT60220770 and newer using powder, except QT60220771 and QT60220789 (Blue Unit)

70 – QT70220815 and newer using powder, except QT70220820, QT70220821 and QT70220822 (Green Units)

MORRIS PAINT

Spray Cans:

Part Number	Description
S73107 - Prior to 2024	Red MORRIS Powder Touch-Up Aerosol Can
N75705 - 2024 to present	Red MORRIS Powder Touch-Up Aerosol Can
N75706 - 2024 to present	Black MORRIS Powder Touch-Up Aerosol Can
N75708 - 2024 to present	Primer MORRIS Powder Touch-Up Aerosol Can
N53713	1K Red MORRIS Touch-Up Pen 12 ml
N53715	1K Red MORRIS Aerosol Can 400 ml
N55450	2K Red Base MORRIS Aerosol Can 250 ml
N55452	2K Clear Coat MORRIS Aerosol Can 250 ml
N55453	2K Grey Primer MORRIS Aerosol Can 250 ml
K65885	White CF-546 Titan Aerosol Can 360 ml

Manuals

Part Number	Description
S66250	Operator's Manual
S66248	Metric Assembly Manual
S66249	Imperial Assembly Manual
S67901	Distribution Assembly Metric
S67900	Distribution Assembly Imperial

Table of Contents

Section 1:

Frames 1-1

Hitch 1-2

40 ft to 70 ft - 12m to 21m 1-2

80 ft - 24m 1-4

Frame - Main 1-6

40 ft to 70 ft - 12m to 21m Carriage - Main 1-6

80 ft - 24m Carriage - Main - Prior to 2024 1-8

80 ft - 24m Carriage - Main - 2024 to Present 1-10

40 ft and 50 ft - 12m and 15m 1-12

60 ft - 18m 1-14

70 ft - 21m 1-16

80 ft - 24m 1-18

Frame - Wing 1-20

40 ft - 12m 1-20

50 ft - 15m - Version 1 1-22

50 ft - 15m - Version 2 1-24

50 ft - 15m - Flip Wing 1-26

60 ft - 18m - Inner Wing 1-28

60 ft - 18m - Outer Wing 1-30

70 ft - 21m - Inner Wing 1-32

70 ft - 21m - Outer Wing 1-34

80 ft - 24m - Inner Wing 1-36

80 ft - 24m - Outer Wing 1-38

80 ft - 24m - Flip Wing 1-40

80 ft - 24m - 4th Row 1-42

Wing Lift 1-44

40 ft and 50 ft - 12m and 15m 1-44

60 ft and 70 ft - 18m and 21m - Prior to 2022 1-46

60 ft and 70 ft - 18m and 21m - 2022 to Present 1-48

80 ft - 24m 1-50

Lighting and Marking 1-52

40 ft to 70 ft - 12m to 21m on 9 Series Cart 1-52

40 ft to 70 ft - 12m to 21m on 10 Series Cart 1-53

80 ft - 24m on 9 Series Cart 1-54

80 ft - 24m on 10 Series Cart 1-55

Clevis Options 1-56

Section 2:

Wheels 2-1

40 ft to 70 ft Wheel Assembly - Main Frame 2-2

80 ft Wheel Assembly - Main Frame 2-3

40 ft to 80 ft Wheel Assembly - Wing Frame 2-4

Hub and Spindle Assembly - S64970 2-5

Hub and Spindle Assembly - S72080 2-6

Hub and Spindle Assembly - N70874 2-7

Section 3:

Opener 3-1

Opener Assembly 3-2

Steel - Prior to 2022 3-2

Cast - 2022 to Present 3-4

Body Assembly 3-6

Steel - Prior to 2022 3-6

Cast - 2022 to Present 3-8

Packer Arm Assembly 3-10

Table of Contents

Steel - Prior to 2022 3-10
Cast - 2022 to Present 3-11
Pack Control - Prior to 2022 3-12
Pack Control - 2022 to Present 3-13
Packer Wheel Assemblies 3-14
Seed Boot 3-15
Injected Polymer Pair Row Kit 3-15
Injected Polymer Left Sideband Kit 3-16
Injected Polymer Right Side Band Kit 3-17
Single Shoot 3-18
Single Shoot 3” Spreader 3-19
Double Shoot - Paired Row 3-20
Double Shoot - High Presure NH3 Kit 3-21
Double Shoot - Side Band - Left 3-22
Double Shoot - Side Band Boot - Right 3-23

Section 4:
Hydraulics 4-1
Wing Lift Hydraulics 4-2
40 ft - 12m 4-2
50 ft - 15m 4-4
60 ft and 70 ft - 18m and 21m 4-6
80 ft - 24m 4-8
Wing Valve - 80 ft - 24m 4-10
Tow Behind Cross Tillage Kit 4-12
9 Series Cart 4-12
10 Series Cart - One Fan 4-14
10 Series Cart - Two Fans 4-16
3 Rank Opener Hydraulics 4-18
10 inch Spacing - 40 ft to 70 ft 4-18
250 mm Spacing - 12 m to 21 m 4-20
12 inch Spacing - 40 ft to 70 ft 4-22
300 mm Spacing - 12 m to 21 m 4-24
15 inch (380 mm) Spacing - 40 ft to 70 ft 4-26
Four Rank Hydraulic Option - 10 inch Spacing 4-28
- 40 ft Model 4-28
- 50 ft Model 4-30
- 60 ft Model 4-32
- 70 ft Model 4-34
- 80 ft Model 4-36
Four Rank Hydraulic Option - 12 inch Spacing 4-38
- 40 ft Model 4-38
- 50 ft Model 4-40
- 60 ft Model 4-42
- 70 ft Model 4-44
- 80 ft Model 4-46
Accumulator Hydraulic Option 4-48
Option 1 - Single Large Accumulator 4-48
Option 2 - Multiple Small Accumulators 4-50
Cylinder Seal Kits 4-52
Pressure Control 4-53
JEM - Pressure Control System 4-53
9 Series Apollo - Lift and Pressure Control Kit - Prior to 2022 4-54
9 Series Apollo - Lift and Pressure Control Kit - 2022 to Present 4-56
10 Series Apollo - Lift and Pressure Control Kit 4-58

Table of Contents

Wing Lift Valve Block 4-60
Opener Valve Block 4-61
2018-2019 4-61
2020 to present 4-62

Section 5:
Distribution 5-1
Quick Coupler - 2 1/2 Inch 5-4
3 Outlet 5-4
5 Outlet 5-5
Quick Coupler - 3 Inch 5-6
2x2 Outlet 5-6
2x3 Outlet 5-7
Tow Between Mount - 10 Series 5-8
Divider Head Assembly 5-10
Regular 1 inch Square Fingers 5-10
Mounting Stands 5-12
Offset Dual Shoot Stands - 2023 to Present 5-14
Single Shoot - Tow Behind 5-16
40 ft - 12m - 5 primaries - 12 and 15 inch (300 - 380mm) Spacing 5-16
40 ft - 12m - 6 primaries - 10 inch (250mm) Spacing 5-18
50 ft - 15m - 6 primaries - 15 inch (380mm) Spacing 5-20
50 ft - 15m - 7 primaries - 10 and 12 inch (250 - 300mm) Spacing 5-22
60 ft - 18m - 8 primaries - 10, 12 and 15 inch (250 - 300 - 380mm) Spacing 5-24
70 ft - 21m - 8 primaries - 10, 12 and 15 inch (250 - 300 - 380mm) Spacing 5-26
70 ft - 21m - 9 primaries - 10, 12 and 15 inch (250 - 300 - 380mm) Spacing 5-28
80 ft - 24m - 10 primaries - 10 and 12 inch (250 - 300) Spacing 5-30
Single Shoot - Tow Between 5-32
40 ft - 12m - 5 primaries - 12 and 15 inch (300 - 380mm) Spacing 5-32
40 ft - 12m - 6 primaries - 10 inch (250mm) Spacing 5-34
50 ft - 15m - 6 primaries - 15 inch (380mm) Spacing 5-36
50 ft - 15m - 7 primaries - 10 and 12 inch (250 - 300mm) Spacing 5-38
60 ft - 18m - 8 primaries - 10, 12 and 15 inch (250 - 300 - 380mm) Spacing 5-40
70 ft - 21m - 8 primaries - 10, 12 and 15 inch (250 - 300 - 380mm) Spacing 5-42
70 ft - 21m - 9 primaries - 10, 12 and 15 inch (250 - 300 - 380mm) Spacing 5-44
80 ft - 24m - 10 primaries - 10 and 12 inch (250 - 300) Spacing 5-46
Dual Shoot - Stacked Heads - Tow Behind - Prior to 2023 5-48
40 ft - 12m - 5 primaries - 12 and 15 inch (300 - 380mm) Spacing 5-48
40 ft - 12m - 6 primaries - 10 inch (250mm) Spacing 5-50
50 ft - 15m - 6 primaries - 15 inch (380mm) Spacing 5-52
50 ft - 15m - 7 primaries - 10 and 12 inch (250 - 300mm) Spacing 5-54
60 ft - 18m - 8 primaries - 10, 12 and 15 inch (250 - 300 - 380mm) Spacing 5-56
70 ft - 21m - 9 primaries - 10, 12 and 15 inch (250 - 300 - 380mm) Spacing 5-58
Dual Shoot - Stacked Heads - Tow Between - Prior to 2023 5-60
40 ft - 12m - 5 primaries - 12 and 15 inch (300 - 380mm) Spacing 5-60
40 ft - 12m - 6 primaries - 10 inch (250mm) Spacing 5-62
50 ft - 15m - 6 primaries - 15 inch (380mm) Spacing 5-64
50 ft - 15m - 7 primaries - 10 and 12 inch (250 - 300mm) Spacing 5-66
60 ft - 18m - 8 primaries - 10, 12 and 15 inch (250 - 300 - 380mm) Spacing 5-68
70 ft - 21m - 9 primaries - 10, 12 and 15 inch (250 - 300 - 380mm) Spacing 5-70
Dual Shoot - Offset Heads - Tow Behind - 2023 to Present 5-72
40 ft - 12m - 5 primaries - 12 and 15 inch (300 - 380mm) Spacing 5-72
40 ft - 12m - 6 primaries - 10 inch (250mm) Spacing 5-74
50 ft - 15m - 6 primaries - 15 inch (380mm) Spacing 5-76
50 ft - 15m - 7 primaries - 10 and 12 inch (250 - 300mm) Spacing 5-78

Table of Contents

60 ft - 18m - 8 primaries - 10, 12 and 15 inch (250 - 300 - 380mm) Spacing.....5-80
70 ft - 21m - 8 primaries - 10, 12 and 15 inch (250 - 300 - 380mm) Spacing.....5-82
70 ft - 21m - 9 primaries - 10, 12 and 15 inch (250 - 300 - 380mm) Spacing.....5-84
80 ft - 24m - 10 primaries - 10 and 12 inch (250 - 300) Spacing.....5-86
80 ft - 24m - 10 primaries - 10 and 12 inch (250 - 300) Spacing.....5-88
80 ft - 24m - 10 primaries - 10 and 12 inch (250 - 300) Spacing.....5-90
Dual Shoot - Offset Heads - Tow Between - 2023 to Present.....5-92
40 ft - 12m - 5 primaries - 12 and 15 inch (300 - 380mm) Spacing.....5-92
40 ft - 12m - 6 primaries - 10 inch (250mm) Spacing.....5-94
50 ft - 15m - 6 primaries - 15 inch (380mm) Spacing.....5-96
50 ft - 15m - 7 primaries - 10 and 12 inch (250 - 300mm) Spacing.....5-98
60 ft - 18m - 8 primaries - 10, 12 and 15 inch (250 - 300 - 380mm) Spacing.....5-100
70 ft - 21m - 8 primaries - 10, 12 and 15 inch (250 - 300 - 380mm) Spacing.....5-102
70 ft - 21m - 9 primaries - 10, 12 and 15 inch (250 - 300 - 380mm) Spacing.....5-104
80 ft - 24m - 10 primaries - 10 and 12 inch (250 - 300) Spacing.....5-106
80 ft - 24m - 10 primaries - 10 and 12 inch (250 - 300) Spacing.....5-108
80 ft - 24m - 10 primaries - 10 and 12 inch (250 - 300) Spacing.....5-110
Broadcast Kit.....5-112
10 and 12 inch (250 - 300mm) Spacing.....5-112

Section 6:
Options.....6-1
Rear Tow Hitch.....6-2
Remote Clutch Switch.....6-3
4th Row Kit.....6-4
40 ft - 12m.....6-4
50 ft - 15m.....6-6
60 ft - 18m.....6-8
70 ft - 21m.....6-10
Weight Kit.....6-12
Wing Latch Kit.....6-13
40 ft and 50 ft.....6-13
60 ft and 70 ft.....6-14

Index.....i

Section 1: Frames

Section Contents

Hitch 1-2
- 40 ft to 70 ft - 12m to 21m 1-2
- 80 ft - 24m 1-4

Frame - Main 1-6
- 40 ft to 70 ft - 12m to 21m Carriage - Main 1-6
- 80 ft - 24m Carriage - Main - Prior to 2024 1-8
- 80 ft - 24m Carriage - Main - 2024 to Present 1-10
- 40 ft and 50 ft - 12m and 15m 1-12
- 60 ft - 18m 1-14
- 70 ft - 21m 1-16
- 80 ft - 24m 1-18

Frame - Wing 1-20
- 40 ft - 12m 1-20
- 50 ft - 15m - Version 1 1-22
- 50 ft - 15m - Version 2 1-24
- 50 ft - 15m - Flip Wing 1-26
- 60 ft - 18m - Inner Wing 1-28
- 60 ft - 18m - Outer Wing 1-30
- 70 ft - 21m - Inner Wing 1-32
- 70 ft - 21m - Outer Wing 1-34
- 80 ft - 24m - Inner Wing 1-36
- 80 ft - 24m - Outer Wing 1-38
- 80 ft - 24m - Flip Wing 1-40
- 80 ft - 24m - 4th Row 1-42

Wing Lift 1-44
- 40 ft and 50 ft - 12m and 15m 1-44
- 60 ft and 70 ft - 18m and 21m - Prior to 2022 1-46
- 60 ft and 70 ft - 18m and 21m - 2022 to Present 1-48
- 80 ft - 24m 1-50

Lighting and Marking 1-52
- 40 ft to 70 ft - 12m to 21m on 9 Series Cart 1-52
- 40 ft to 70 ft - 12m to 21m on 10 Series Cart 1-53
- 80 ft - 24m on 9 Series Cart 1-54
- 80 ft - 24m on 10 Series Cart 1-55

Clevis Options 1-56

Hitch
40 ft to 70 ft - 12m to 21m

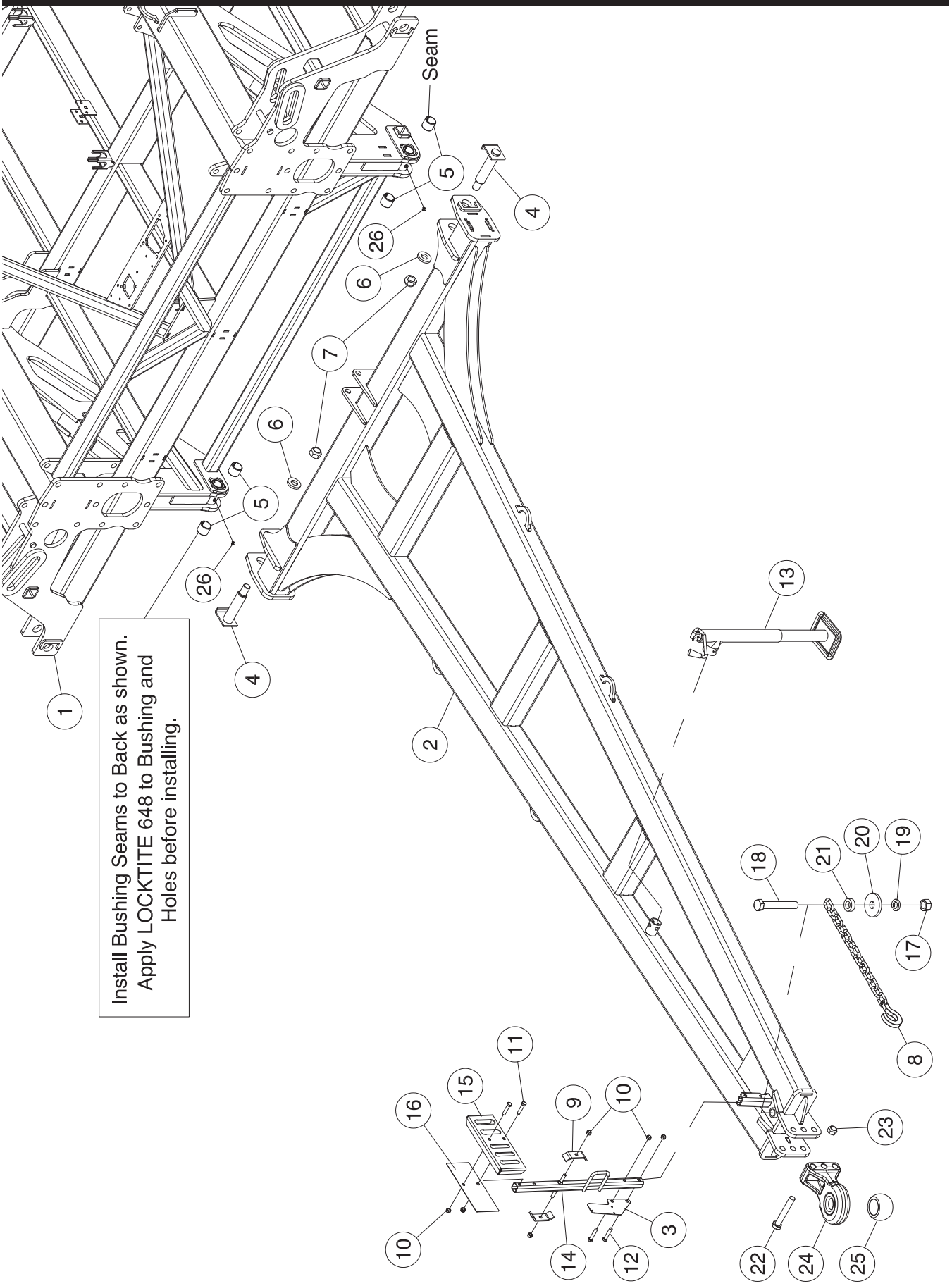

Hitch - 40 ft to 70 ft - 12m to 21m

Item	Part No.	Description	Qty
1	S64240	Main Frame (Includes Item 5)	1
2	S64273	Hitch	1
3	N58671	Plate - Case Drain Header Mount (Tow Behind Air Cart only)	1
4	S64360	Pin - 1 3/4 x 6 11/16 Lg	2
5	S64325	Spring Bushing - 1.75 ID x 2.00 OD x 1.75 Lg	4
6	S26462	Washer - 1 1/4 ID x 2 1/2 OD x 3/8 Thick	2
7	S39780	Lock Nut - 1 1/4 Unitorque	2
8	N44710	Safety Chain - 80,000 Lb	1
9	C26321	Hose Holder Clamp	2
10	F-3405	Locknut - 1/2 Unitorque	6
11	W-490	Hex Bolt - 1/2 x 2 1/2 Lg	2
12	W-491	Hex Bolt - 1/2 x 2 3/4 Lg	2
13	S39391	Top Wind Jack - 2000 Lb.	1
14	S39665	Hose Holder Stand	1
15	S62722	Hydraulic Hose Holder Plate - 5 Slot - Dual Fan	1
16	S62723	Back Plate - 5 Slot - Dual Fan	1
17	P61D20	Hex Nut - 1 1/4	1
18	S44715	Hex Bolt - 1 1/4 x 8 Lg	1
19	C39432	Lockwasher - 1 1/4	1
20	S44716	Retaining Washer - 1 5/16 ID x 4 1/4 OD x 1/2 Thick	1
21	S44717	Chain Link Spacer - 1 5/16 ID x 2 1/4 OD x 3/4 Thick - Required for 80,000 lb Chain	1
22	S42952	Hex Bolt - 1 x 6 5/8 Lg	3
23	D-5274	Lock Nut - 1 Unitorque	3
24	* * * * *	Clevis - Refer to “Clevis Options” page 1-56	
25	* * * * *	Clevis Insert - Refer to “Clevis Options” page 1-56	
26	F-3056	Grease Fitting - 90 Degree	2
	S66442	Decal - MORRIS (Not Shown)	2
	C25810	Decal - Grease 100 Hours (Not Shown)	2

Used to attach to a Tow Between Cart as follows:

Clevis CAT 4 - 1 1/2 Pin Diameter Draw Pin

- 9365, 9450 Tow Between Carts
- 9445, 9550 and 9650 Tow Between Carts - Prior to 2016
- 9240s, 9252s and 9300s Tow Between Carts

Clevis CAT 4 - 2 Diameter Draw Pin

- 9445, 9550 and 9650 Tow Between Carts - 2016 to Present
- 9800 and 91000 Tow Between Carts

Hitch
80 ft - 24m

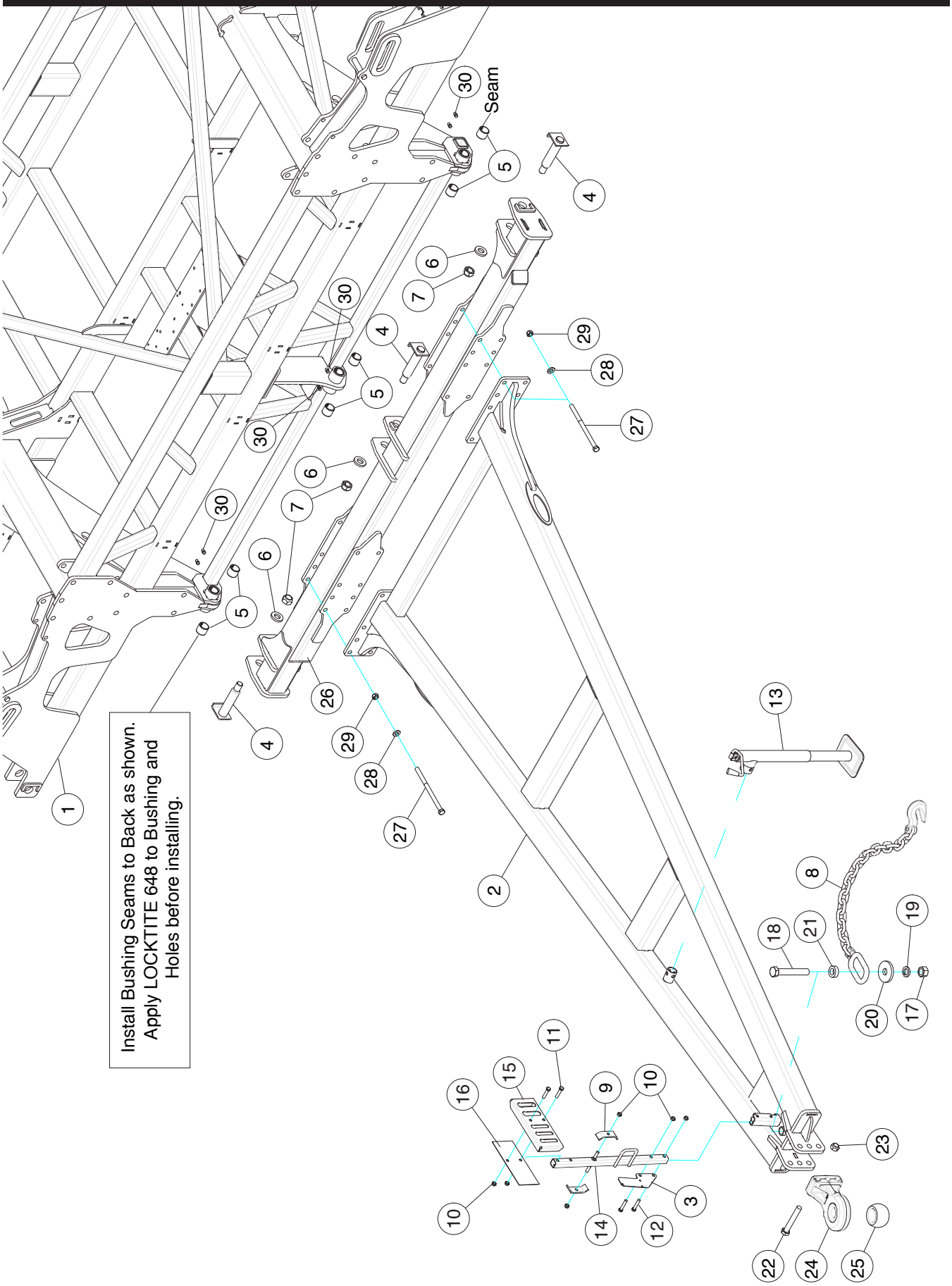

Hitch - 80 ft - 24m

Item	Part No.	Description	Qty
1	S72600	Main Frame (Includes Item 5 and 30)	1
2	S72630	Hitch	1
3	N58671	Plate - Case Drain Header Mount (Tow Behind Air Cart only)	1
4	S64360	Pin - 1 3/4 x 6 11/16 Lg	3
5	S64325	Spring Bushing - 1.75 ID x 2.00 OD x 1.75 Lg	6
6	S26462	Washer - 1 1/4 ID x 2 1/2 OD x 3/8 Thick	3
7	S39780	Lock Nut - 1 1/4 Unitorque	3
8	N44710	Safety Chain - 80,000 Lb	1
9	C26321	Hose Holder Clamp	2
10	F-3405	Locknut - 1/2 Unitorque	6
11	W-490	Hex Bolt - 1/2 x 2 1/2 Lg	2
12	W-491	Hex Bolt - 1/2 x 2 3/4 Lg	2
13	S39391	Top Wind Jack - 2000 Lb.	1
14	S39665	Hose Holder Stand	1
15	S62722	Hydraulic Hose Holder Plate - 5 Slot - Dual Fan	1
16	S62723	Back Plate - 5 Slot - Dual Fan	1
17	P61D20	Hex Nut - 1 1/4	1
18	S44715	Hex Bolt - 1 1/4 x 8 Lg	1
19	C39432	Lockwasher - 1 1/4	1
20	S44716	Retaining Washer - 1 5/16 ID x 4 1/4 OD x 1/2 Thick	1
21	S44717	Chain Link Spacer - 1 5/16 ID x 2 1/4 OD x 3/4 Thick - Required for 80,000 lb Chain	1
22	S42952	Hex Bolt - 1 x 6 5/8 Lg	3
23	D-5274	Lock Nut - 1 Unitorque	3
24	* * * * *	Clevis - Refer to “Clevis Options” page 1-56	
25	* * * * *	Clevis Insert - Refer to “Clevis Options” page 1-56	
26	S72636	Hitch Beam	1
27	S73139	Hex Bolt - 3/4 x 12 Lg	16
28	W-476	Flat Washer - 3/4	16
29	D-5273	Lock Nut - 3/4 Unitorque	16
30	S-752	Grease Nipple	6
	S66442	Decal - MORRIS (Not Shown)	2
	C25810	Decal - Grease 100 Hours (Not Shown)	4

Used to attach to a Tow Between Cart as follows:

Clevis CAT 4 - 1 1/2 Pin Diameter Draw Pin

- 9365, 9450 Tow Between Carts
- 9445, 9550 and 9650 Tow Between Carts - Prior to 2016
- 9240s, 9252s and 9300s Tow Between Carts

Clevis CAT 4 - 2 Diameter Draw Pin

- 9445, 9550 and 9650 Tow Between Carts - 2016 to Present
- 9800 and 91000 Tow Between Carts

Frame - Main
40 ft to 70 ft - 12m to 21m Carriage - Main

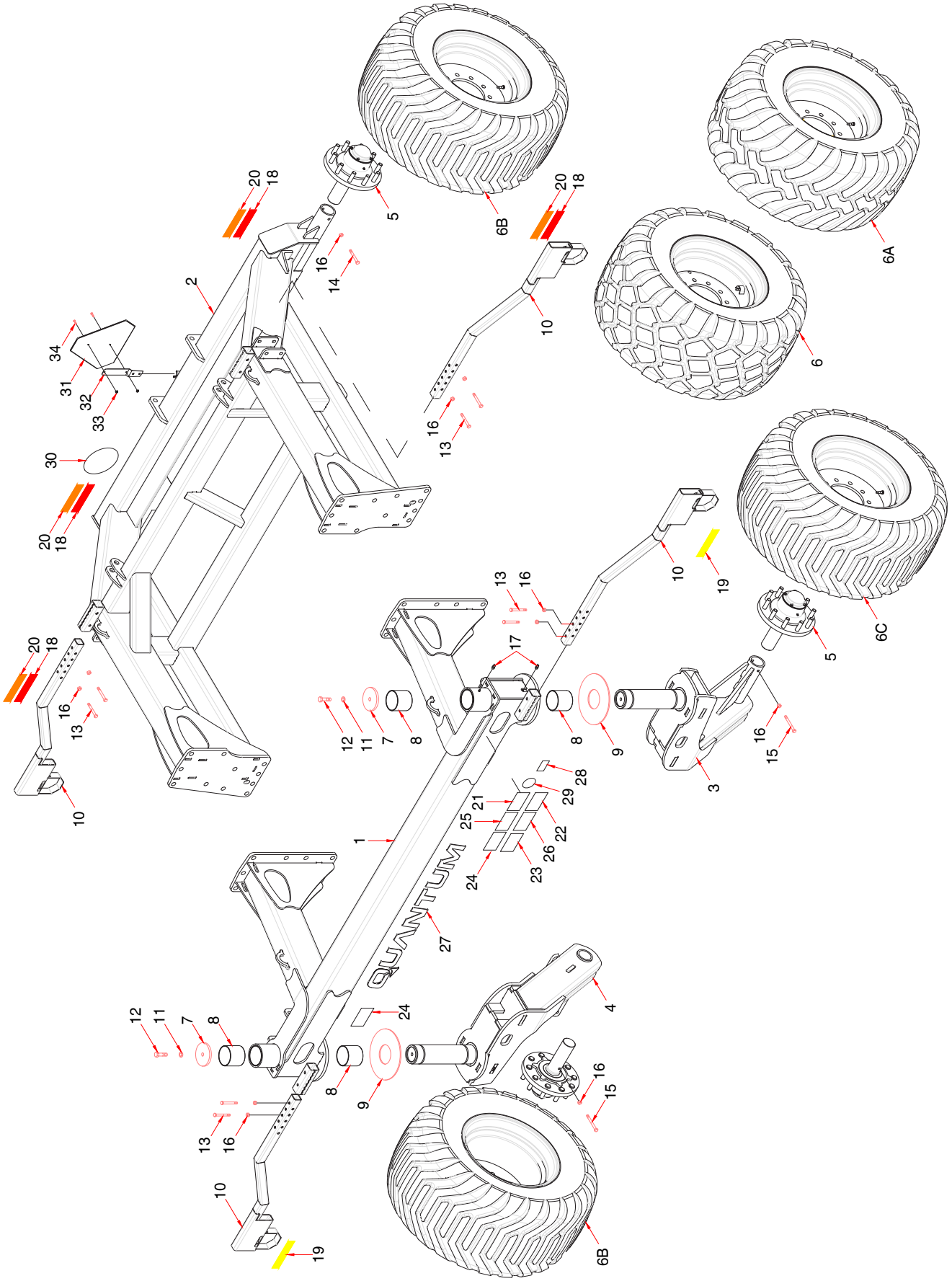

Frame - Main - Carriage Main - 40 ft to 70 ft - 12m to 21m

Item	Part No.	Description	Qty
1	S64200	Front Carriage (Includes items 8 and 17)	1
2	S64225	Rear Carriage	1
3	S66294	Castor - Main - Left	1
4	S66296	Castor - Main - Right	1
5	**S72080**	Hub and Spindle Assembly	4
	S64970	Hub and Spindle Assembly - Prior to the following Serial Numbers: **40ft** - QT40210486, **50ft** - QT50210561, **60ft** - QT60210745, **70ft** - QT70210794	
6	S68660	Tire and Rim Assembly - **By-Directional (40 ft to 60 ft 2021 to present)**	
6A	S64960	Tire and Rim Assembly - **By-Directional (70 ft model only 2021 - 2022)**	4
6B	**K65090**	Tire Rim Assembly - **Left** (Shown above) . . use on right side of machine (2018-2020)	2
6C	**K65091**	Tire Rim Assembly - **Right** (Not Shown) . . . use on left side of machine (2018-2020)	2
7	S64955	Cap - Castor Main - 6 Diameter	2
8	S64948	Bushing - 4 1/2 ID x 4 3/4 OD x 4 Lg	4
9	S64950	Wear Disc - 4 9/16 ID x 12 OD x 1/4 Thick	2
10	S64900	Tube - Mounting - Lighting	4
11	W-527	Lockwasher - 3/4	2
12	C-695	Bolt - 3/4 x 2 Lg	2
13	D-5519	Hex Bolt - 1/2 x 3 1/4	8
14	S-951	Bolt - 1/2 x 4 1/2 Lg	2
15	W-496	Bolt - 1/2 x 5 1/2 Lg	2
16	F-3405	Locknut - 1/2 Unitorque	12
17	S-752	Grease Nipple	4
18	N34476	Reflector - Red	2
19	N34477	Reflector - Amber	2
20	N34478	Reflector - Orange	2
21	S65150	Decal - Caution: Avoid injury	1
22	S65151	Decal - Warning: Before Servicing	1
23	S65152	Decal - Warning: HIGH-PRESSURE FLUID HAZARD	1
24	S65153	Decal - Danger: Crushing Hazard	2
25	S65154	Decal - Warning: No Riders	1
26	S65155	Decal - Warning: Crushing Hazard	1
27	S66246	Decal - QUANTUM	1
28	N74340	Decal - Warning - Loss of Control	1
29	N74900	Decal - Speed ID 30 km/h - 70mm Diameter	1
	N74903	Decal - Speed ID 20 mph - 70mm Diameter (USA only)	
30	N74299	Decal - Speed ID 30 km/h - 200mm Diameter	1
	N74902	Decal - Speed ID 20 mph - 200mm Diameter (USA only)	
31	N34475	SMV Sign	1
32	N34643	Spade Mount Bracket	1
33	N22778	Locknut - 1/4 Nylon Insert	2
34	K-3830	Hex Bolt - 1/4 x 1/2 Lg	2
	C25809	Decal - Grease 50 Hours (Not Shown)	2
	S55498	Decal - Patent (Not Shown)	1
	S67899	Decat - Patent (Not Shown)	1
	11547	Decal - Patent Pending (Not Shown)	1

Frame - Main
80 ft - 24m Carriage - Main - Prior to 2024

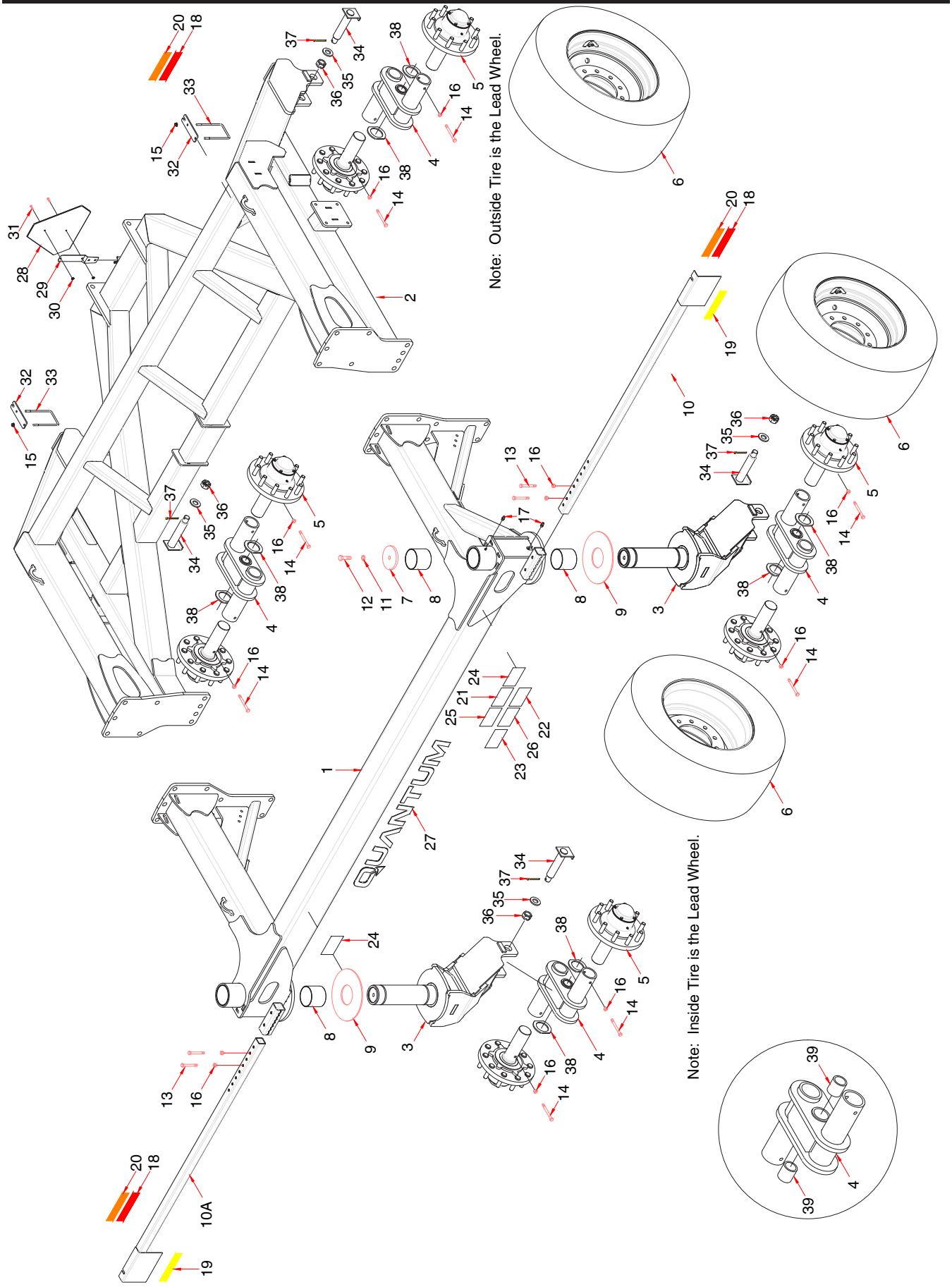

Frame - Main - Carriage Main - 80 ft - 24m - Prior to 2024

Item	Part No.	Description	Qty
1	S72860	Front Carriage (Includes items 8 and 17)	1
2	S72875	Rear Carriage	1
3	S72490	Castor Fork	2
4	S72499	Walking Beam - Offset (Includes 2 of Bushing S55639 item 39)	4
5	**S72080**	Axle and Spindle Assembly	8
6	**S72825**	**Tire and Rim Assembly - Alliance 381 - 445/50R22.5 VF**	8
7	S64955	Cap - Castor Main - 6 Diameter	2
8	S64948	Bushing - 4 1/2 ID x 4 3/4 OD x 4 Lg	4
9	S64950	Wear Disc - 4 9/16 ID x 12 OD x 1/4 Thick	2
10	S72700	Light Bracket - Left	1
10A	S73110	Light Bracket - Right	1
11	W-527	Lockwasher - 3/4	2
12	C-695	Bolt - 3/4 x 2 Lg	2
13	D-5519	Hex Bolt - 1/2 x 3 1/4	4
14	S-951	Bolt - 1/2 x 4 1/2 Lg	8
15	D-5279	Locknut - 3/8 Flange	4
16	F-3405	Locknut - 1/2 Unitorque	12
17	S-752	Grease Nipple	4
18	N34476	Reflector - Red	2
19	N34477	Reflector - Amber	2
20	N34478	Reflector - Orange	2
21	S65150	Decal - Caution: Avoid injury	1
22	S65151	Decal - Warning: Before Servicing	1
23	S65152	Decal - Warning: High Pressure Fluid Hazard	1
24	S65153	Decal - Danger: Crushing Hazard	2
25	S65154	Decal - Warning: No Riders	1
26	S65155	Decal - Warning: Crushing Hazard	1
27	S66246	Decal - QUANTUM	1
28	N34475	SMV Sign	1
29	N34643	Spade Mount Bracket	1
30	N22778	Locknut - 1/4 Nylon Insert	2
31	K-3830	Hex Bolt - 1/4 x 1/2 Lg	2
32	S34465	Bracket - Light	2
33	N19723	U-Bolt - 3/8 x 4 x 7 UL	2
34	S72497	Pin - 1 3/4 OD x 7 1/2 UL	4
35	N13962	Washer - 1 9/32 ID x 2 1/2 OD x 1/4 thick	4
36	N19484	Castle Nut - 1 1/4 - 12 UNF	4
37	D-5239	Cotter Pin - 1/4 x 2 1/4 Lg	4
38	S55629	Wear Washer	8
39	S55639	Bushing - 1.75 ID x 2.25 OD x 2.375Lg	8
	C25809	Decal - Grease 50 Hours (Not Shown)	2
	S55498	Decal - Patent (Not Shown)	1
	S67899	Decat - Patent (Not Shown)	1
	11547	Decal - Patent Pending (Not Shown)	1

Frame - Main
80 ft - 24m Carriage - Main - 2024 to Present

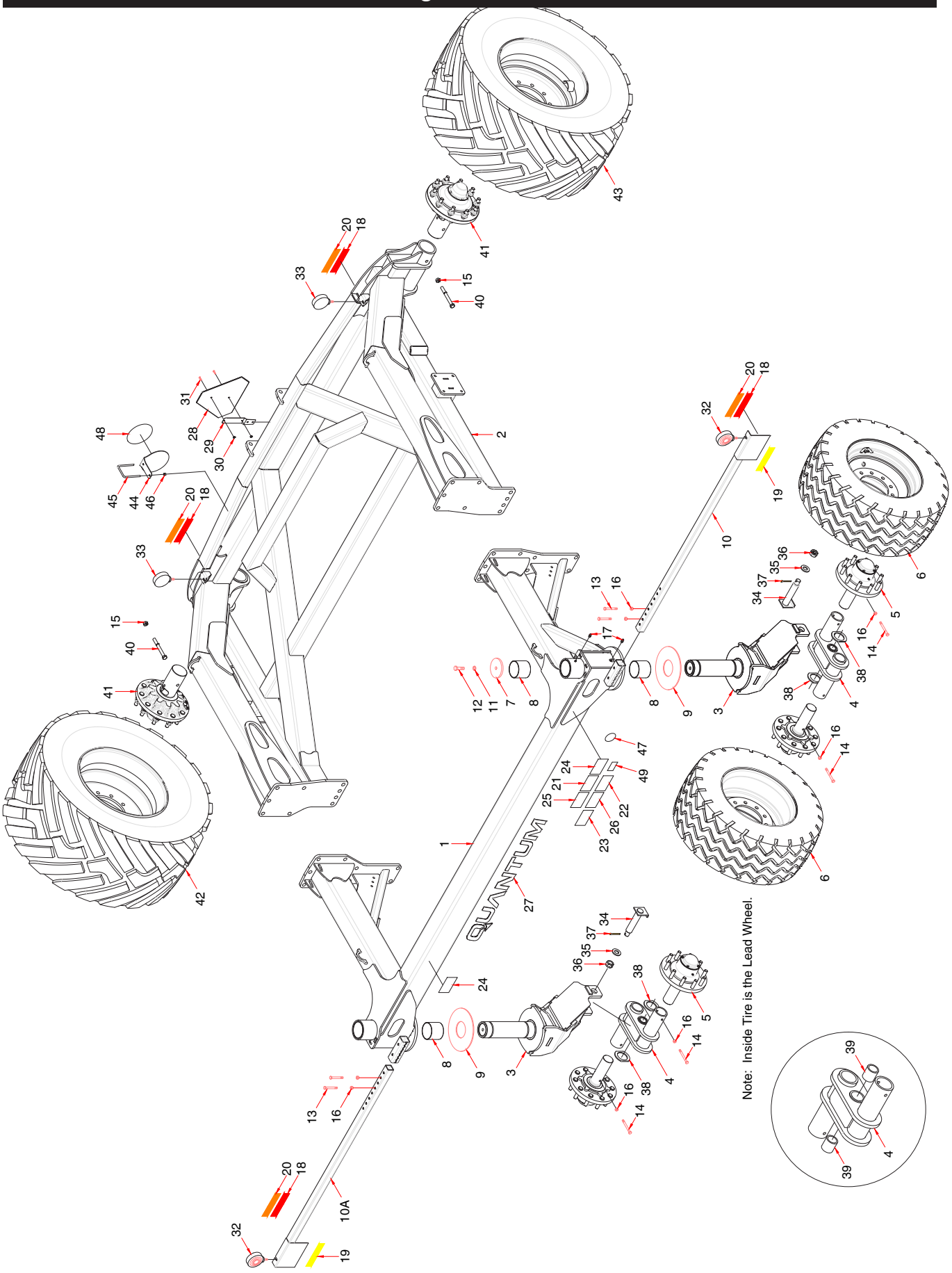

Frame - Main - Carriage Main - 80 ft - 24m - 2024 to Present

Item	Part No.	Description	Qty
1	S72860	Front Carriage (Includes items 8 and 17)	1
2	S73330	Rear Carriage	1
3	S72490	Castor Fork	2
4	S72499	Walking Beam - Offset (Includes 2 of Bushing S55639 item 39)	2
5	S72080	Axle and Spindle Assembly - 3 Spindle	4
6	S72825	Tire and Rim Assembly - Alliance 381 - 445/50R22.5 VF	4
7	S64955	Cap - Castor Main - 6 Diameter	2
8	S64948	Bushing - 4 1/2 ID x 4 3/4 OD x 4 Lg	4
9	S64950	Wear Disc - 4 9/16 ID x 12 OD x 1/4 Thick	2
10	S72700	Light Bracket - Left	1
10A	S73110	Light Bracket - Right	1
11	W-527	Lockwasher - 3/4	2
12	C-695	Hex Bolt - 3/4 x 2 Lg	2
13	D-5519	Hex Bolt - 1/2 x 3 1/4 Lg	4
14	S-951	Hex Bolt - 1/2 x 4 1/2 Lg	4
15	D-5273	Locknut - 3/4 Unitorque	2
16	F-3405	Locknut - 1/2 Unitorque	12
17	S-752	Grease Nipple	4
18	N34476	Reflector - Red	2
19	N34477	Reflector - Amber	2
20	N34478	Reflector - Orange	2
21	S65150	Decal - Caution: Avoid injury	1
22	S65151	Decal - Warning: Before Servicing	1
23	S65152	Decal - Warning: High Pressure Fluid Hazard	1
24	S65153	Decal - Danger: Crushing Hazard	2
25	S65154	Decal - Warning: No Riders	1
26	S65155	Decal - Warning: Crushing Hazard	1
27	S66246	Decal - QUANTUM	1
28	N34475	SMV Sign	1
29	N34643	Spade Mount Bracket	1
30	N22778	Locknut - 1/4 Nylon Insert	2
31	K-3830	Hex Bolt - 1/4 x 1/2 Lg	2
32	N50365	Light LED - Amber	2
33	N50366	Light LED - Red	2
34	S72497	Pin - 1 3/4 OD x 7 1/2 UL	2
35	N13962	Washer - 1 9/32 ID x 2 1/2 OD x 1/4 thick	2
36	N19484	Castle Nut - 1 1/4 - 12 UNF	2
37	D-5239	Cotter Pin - 1/4 x 2 1/4 Lg	2
38	S55629	Wear Washer	4
39	S55639	Bushing - 1.75 ID x 2.25 OD x 2.375Lg	4
40	S32590	Bolt - 3/4 x 7 Lg Gr 8	2
41	N70874	Axle and Spindle Assembly - 4 1/2 Spindle	2
42	S73369	Tire and Rim Assembly - Alliance 885 - 650/55R26.5 - Right	1
43	S73371	Tire and Rim Assembly - Alliance 885 - 650/55R26.5 - Left	1
44	S74901	Bracket - Speed Identification	1
45	D-4932	U-Bolt - 3/8 x 4 1/8 x 3 UL	1
46	S27987	Locknut - 3/8 Flanged Center Lock	2
47	N74900	Decal - Speed ID 30 km/h - 70mm Diameter	1
	N74903	Decal - Speed ID 20 mph - 70mm Diameter (USA only)	
48	N74299	Decal - Speed ID 30 km/h - 200mm Diameter	1
	N74902	Decal - Speed ID 20 mph - 200mm Diameter (USA only)	
49	N74340	Decal - Warning - Loss of Control	1
	C25809	Decal - Grease 50 Hours (Not Shown)	2
	S55498	Decal - Patent (Not Shown)	1
	S67899	Decat - Patent (Not Shown)	1
	11547	Decal - Patent Pending (Not Shown)	1

Frame - Main
40 ft and 50 ft - 12m and 15m

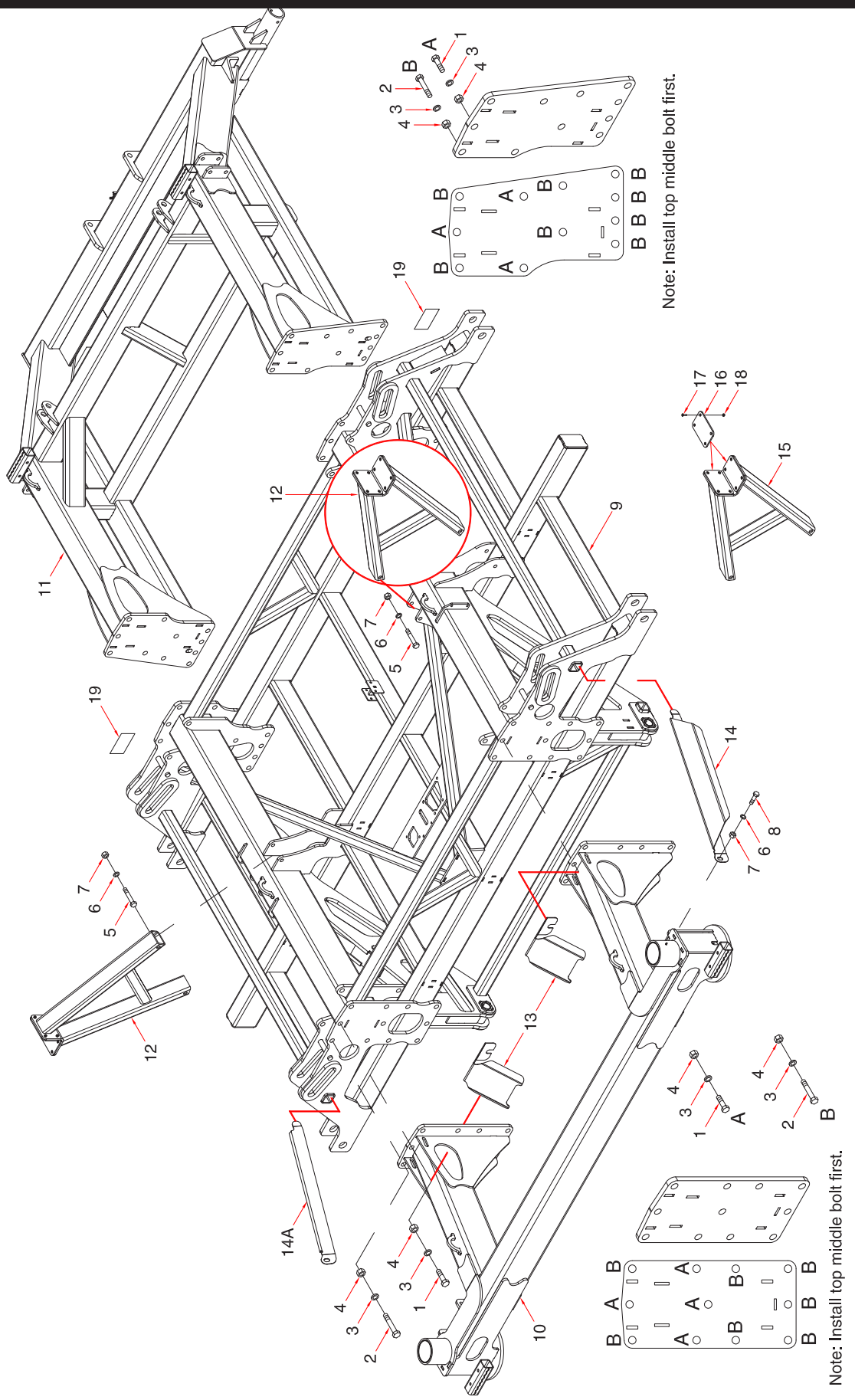

Frame - Main - 40 ft and 50 ft - 12m and 15m

Item	Part No.	Description	Qty
1	J12344	Hex Bolt - 1 x 3 Lg (Hole A)	14
2	C18597	Hex Bolt - 1 x 8 Lg (Hole B)	30
3	C-705	Lockwasher - 1	44
4	W-520	Hex Nut - 1	44
5	D-5558	Hex Bolt - 3/4 x 6 Lg	4
6	W-527	Lockwasher - 3/4	6
7	W-518	Hex Nut - 3/4	6
8	BW-10	Hex Bolt - 3/4 x 1 3/4 Lg	2
9	S64240	Main Frame	1
10	S64200	Front Carriage	1
11	S64225	Rear Carriage	1
12	S65375	Wing Rest Assembly	2
13	S67250	Primary Hose Deflector	2
14	S66430	Primary Hose Hose Suport - Main - Left side (shown)	1
14A	S66435	Primary Hose Hose Suport - Main - Right side	1
		Quantities given per Wing Rest Assembly	
15	S65330	Wing Rest	1
16	S64416	Wear Pad	2
17	C32741	Hex Socket Countersunk Screw - 1/4 x 1 Lg	8
18	N15757	Locknut - 1/4 - 20 UNC	8
19	S65153	Decal - Danger: Crushing Hazard	2

Frame - Main
60 ft - 18m

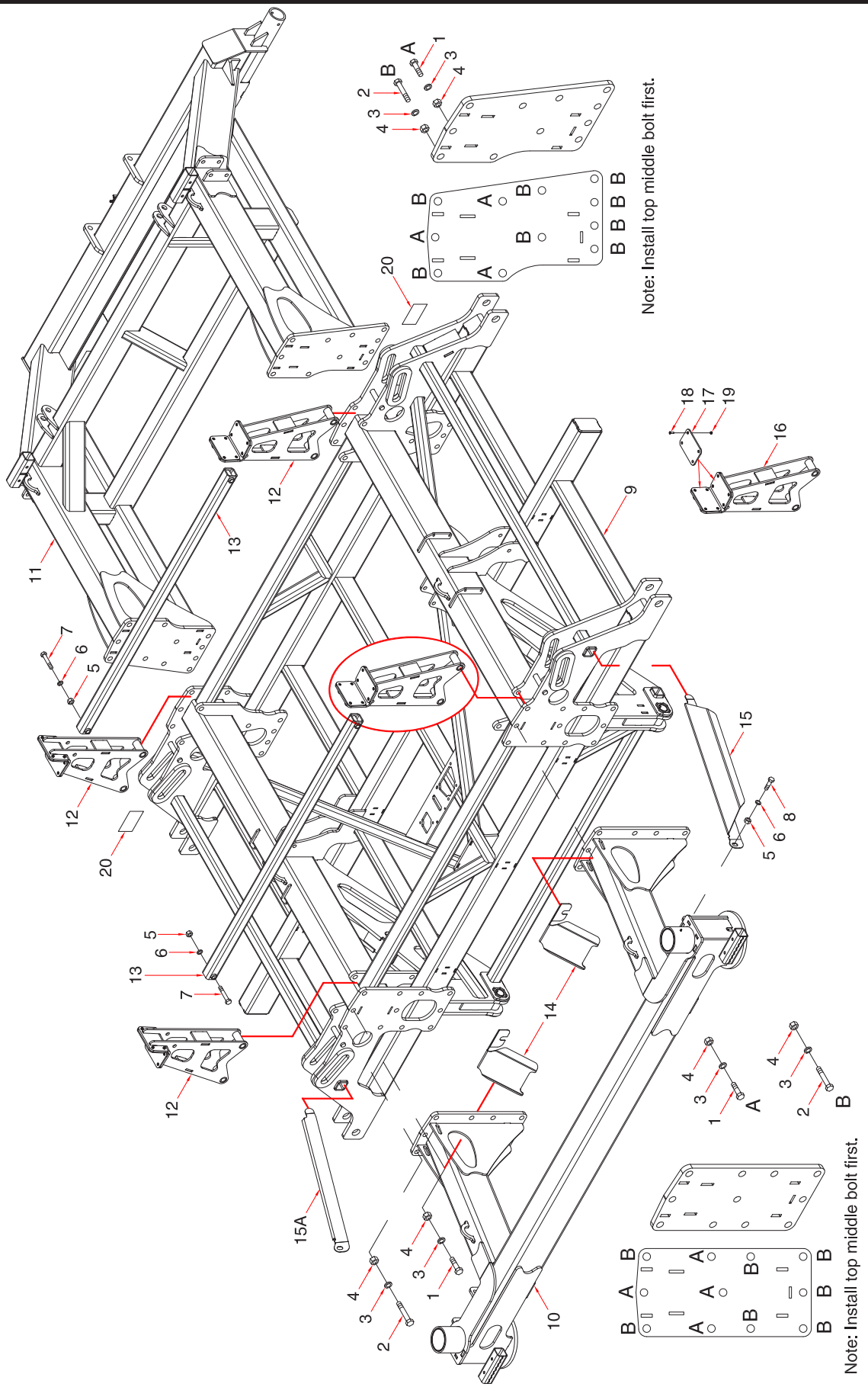

Frame - Main - 60 ft - 18m

Item	Part No.	Description	Qty
1	J12344	Hex Bolt - 1 x 3 Lg (Hole A)	14
2	C18597	Hex Bolt - 1 x 8 Lg (Hole B)	30
3	C-705	Lockwasher - 1	44
4	W-520	Hex Nut - 1	44
5	W-518	Hex Nut - 3/4	6
6	W-527	Lockwasher - 3/4	6
7	S-1191	Hex Bolt - 3/4 x 5 Lg	4
8	BW-10	Hex Bolt - 3/4 x 1 3/4 Lg	2
9	S64240	Main Frame	1
10	S64200	Front Carriage	1
11	S64225	Rear Carriage	1
12	S65360	Wing Rest Assembly (Includes items 16 - 19)	4
13	S64994	Wing Rest - Tie Bar	2
14	S67250	Primary Hose Deflector	2
15	S66430	Primary Hose Hose Suport - Main - Left side (shown)	1
15A	S66435	Primary Hose Hose Suport - Main - Right side	1
		Quantities given per Wing Rest Assembly	
16	S64995	Wing Rest	1
17	S64416	Wear Pad	2
18	C32741	Hex Socket Countersunk Screw - 1/4 x 1 Lg	8
19	N15757	Locknut - 1/4 - 20 UNC	8
20	S65153	Decal - Danger: Crushing Hazard	2

Wing Rest Spacer Plate Kit

Four S67475 Spacer Plate Kits are provided to adjust wear pad height to ensure outer wings rests on pad.

Kit S67475 includes:

- 4 of N15757 Locknut - 1/4 - 20 UNC
- 4 of S67473 Countersunk Screw - 1/4 x 1 3/4 Lg
- 2 of S67474 Spacer Plate - 1/4

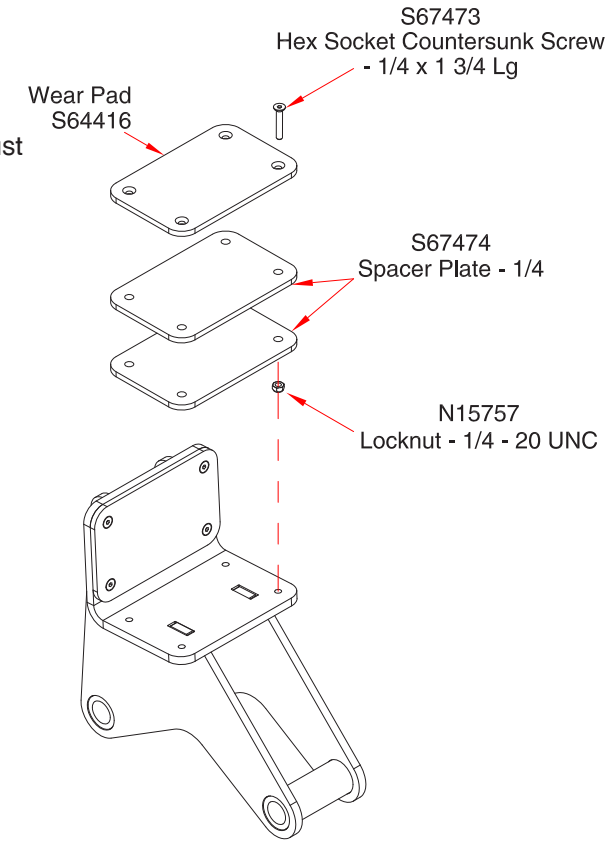

Frame - Main
70 ft - 21m

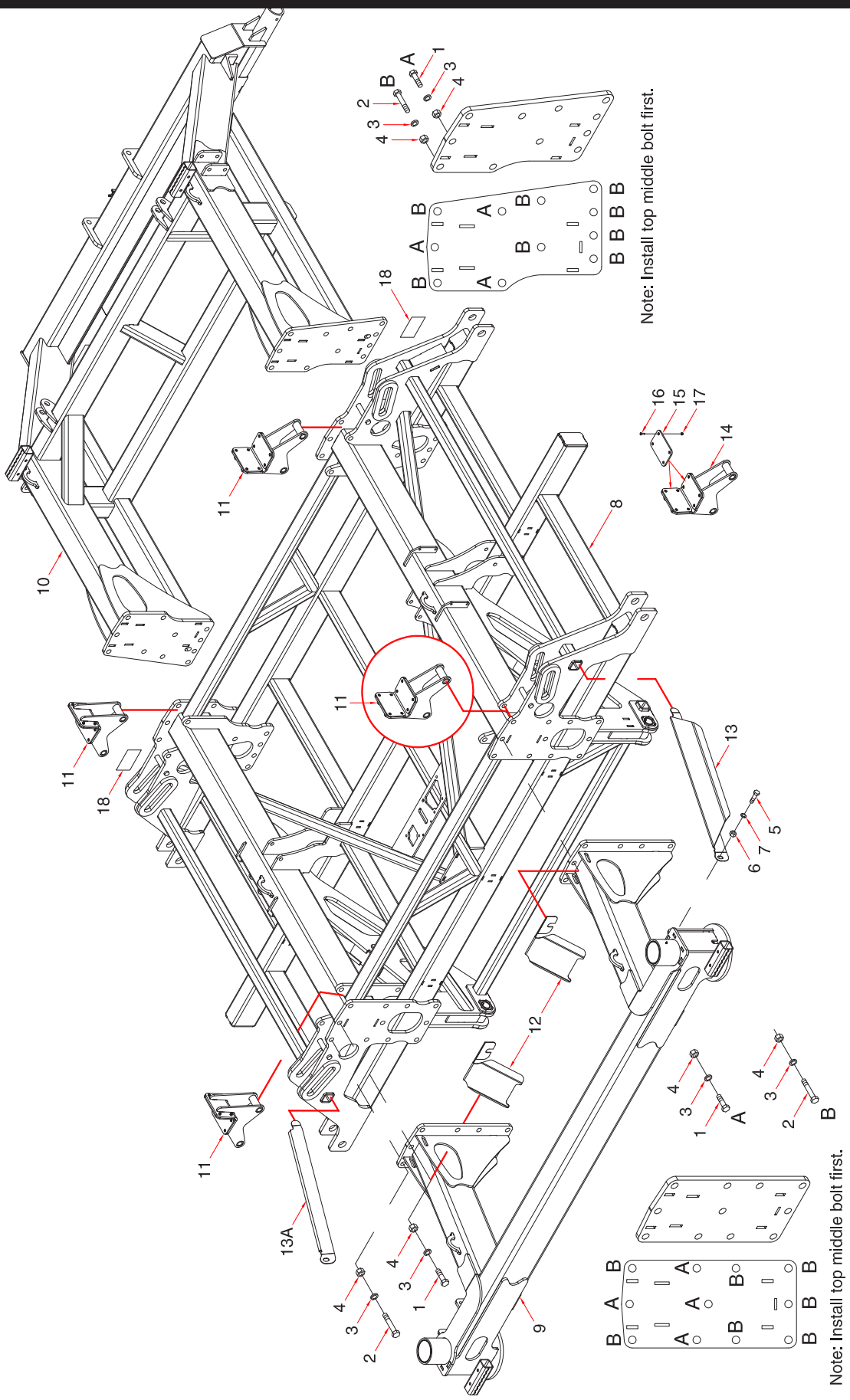

Frame - Main - 70 ft - 21m

Item	Part No.	Description	Qty
1	J12344	Hex Bolt - 1 x 3 Lg (Hole A)	14
2	C18597	Hex Bolt - 1 x 8 Lg (Hole B)	30
3	C-705	Lockwasher - 1	44
4	W-520	Hex Nut - 1	44
5	BW-10	Hex Bolt - 3/4 x 1 3/4 Lg	2
6	W-518	Hex Nut - 3/4	2
7	W-527	Lockwasher - 3/4	2
8	S64240	Main Frame	1
9	S64200	Front Carriage	1
10	S64225	Rear Carriage	1
11	S65370	Wing Rest Assembly (Includes items 14 - 17)	4
12	S67250	Primary Hose Deflector	2
13	S66430	Primary Hose Hose Suport - Main - Left side (shown)	1
13A	S66435	Primary Hose Hose Suport - Main - Right side	1
		Quantities given per Wing Rest Assembly	
14	S64390	Wing Rest	1
15	S64416	Wear Pad	2
16	C32741	Hex Socket Countersunk Screw - 1/4 x 1 Lg	8
17	N15757	Locknut - 1/4 - 20 UNC	8
18	S65153	Decal - Danger: Crushing Hazard	4

Wing Rest Spacer Plate Kit

Four S67475 Spacer Plate Kits are provided to adjust wear pad height to ensure outer wings rests on pad.

Kit S67475 includes:

- 4 of N15757 Locknut - 1/4 - 20 UNC
- 4 of S67473 Countersunk Screw - 1/4 x 1 3/4 Lg
- 2 of S67474 Spacer Plate - 1/4

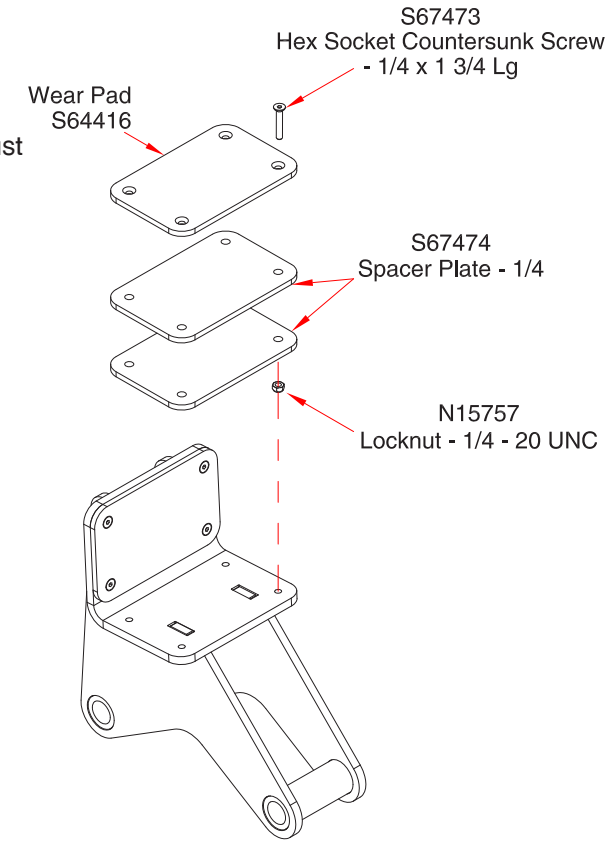

Frame - Main
80 ft - 24m

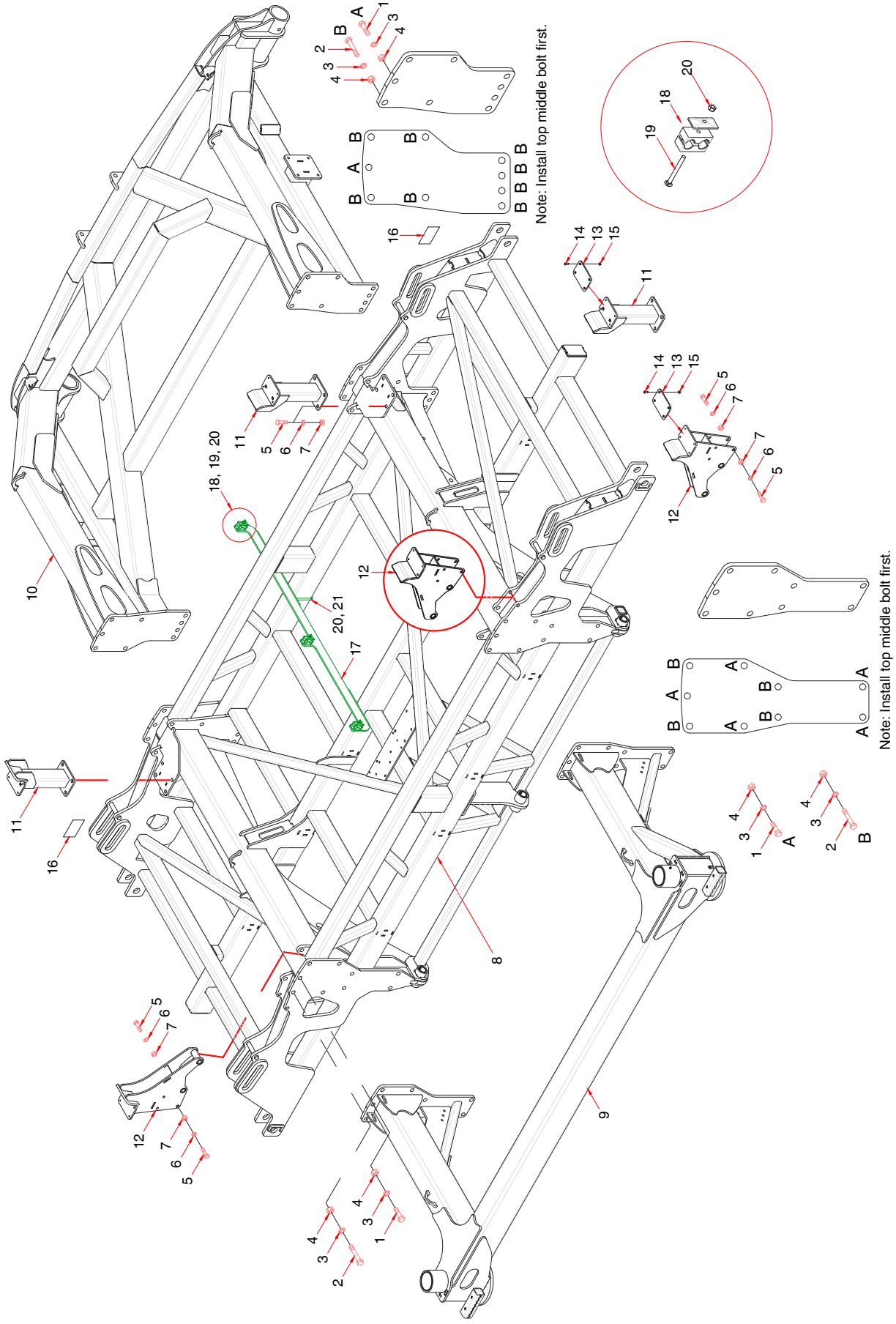

Frame - Main - 80 ft - 24m

Item	Part No.	Description	Qty
1	J12344	Hex Bolt - 1 x 3 Lg (Hole A)	12
2	C18597	Hex Bolt - 1 x 8 Lg (Hole B)	24
3	C-705	Lockwasher - 1	36
4	W-520	Hex Nut - 1	36
5	C-695	Hex Bolt - 3/4 x 2 Lg	12
6	W-527	Lockwasher - 3/4	12
7	W-518	Hex Nut - 3/4	12
8	S72600	Main Frame	1
9	S72860	Front Carriage	1
10	S73330	Rear Carriage	1
11	S72685	Wing Rest Assembly - Back (Includes items 13 - 15)	2
12	S72698	Wing Rest Assembly - Front (Includes items 13 - 15)	2
		Quantities given per Wing Rest Assembly	
13	S64416	Wear Pad	1
14	C32741	Hex Socket Countersunk Screw - 1/4 x 1 Lg	4
15	N15757	Locknut - 1/4 - 20 UNC	4
16	S65153	Decal - Danger: Crushing Hazard	2
		Hydraulic Hose Holder	
17	S73373	Hose Holder	1
18	11740	Plastic Hose Clamp Assembly - 13/16	3
19	S66015	Carriage Bolt - 5/16 X 3 Lg	3
20	C32925	Locknut - 5/16 Center	3
20	C-3932	U-Bolt - 1/2 X 4 X 7 1/4 UL	2
21	D14565	Locknut - 1/2 Serrated	4

Frame - Wing
40 ft - 12m

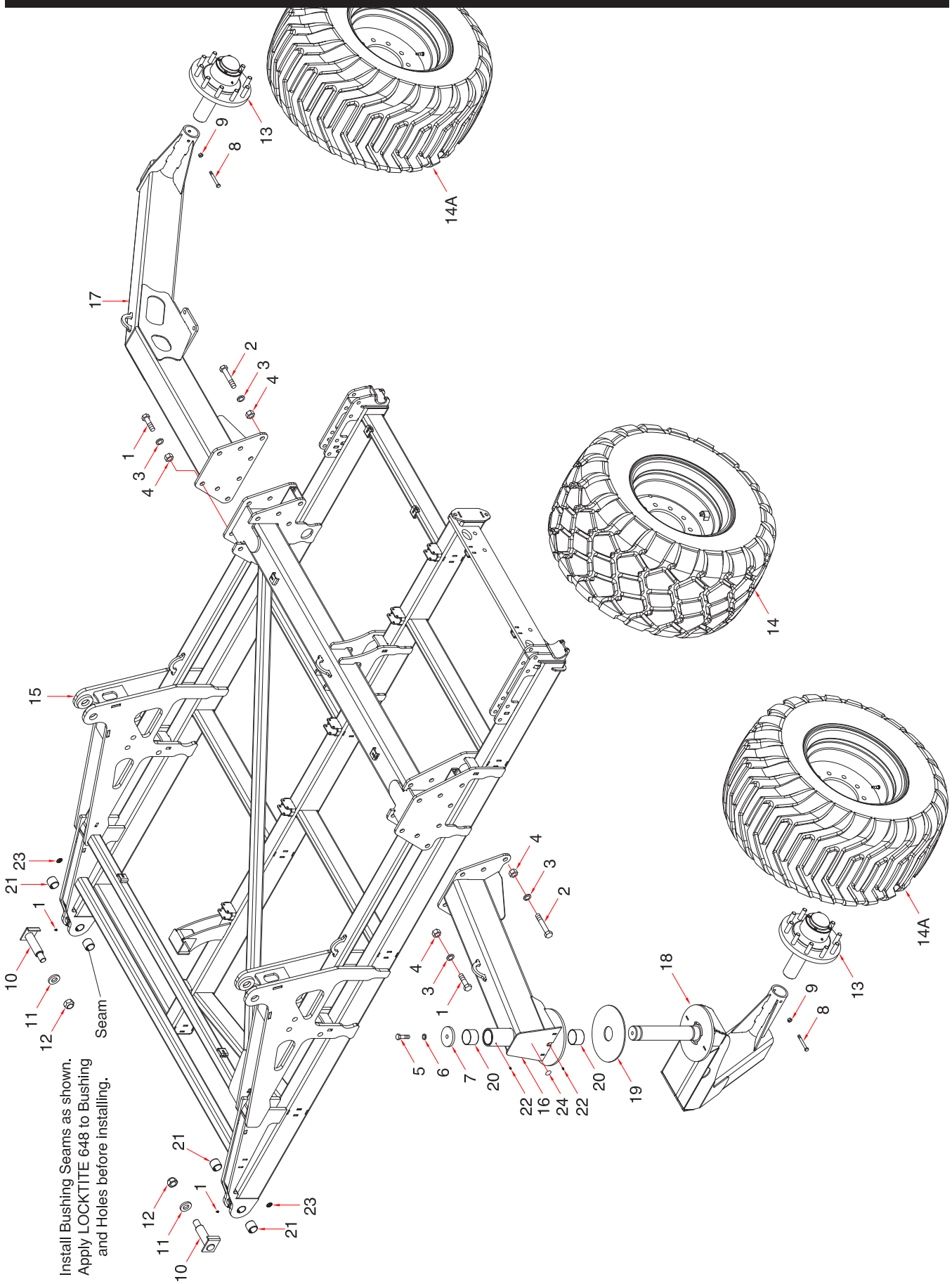

Frame - Wing - 40 ft - 12m

Item	Part No.	Description	Qty
		Quantities given per Wing	
1	J12344	Hex Bolt - 1 x 3 Lg (Prior to 2022)	4
	D12903	Hex Bolt - 1 x 7 Lg **(From 2022 to Present)**	4
2	D12903	Hex Bolt - 1 x 7 Lg	12
3	C-705	Lockwasher - 1	16
4	W-520	Hex Nut - 1	16
5	C-695	Hex Bolt - 3/4 x 2 Lg	1
6	W-527	Lockwasher - 3/4	1
7	S64303	Cap - Castor Wing - 4 1/4 Dia	1
8	S-951	Bolt - 1/2 x 4 1/2 Lg	2
9	F-3405	Lock Nut - 1/2 Unitorque	2
10	S64305	Pin - 1 3/4 x 5 1/2 Lg	2
11	S26462	Washer - 1 1/4 ID x 2 1/2 OD x 3/8 Thick	2
12	S39780	Lock Nut - 1 1/4 Unitorque	2
13	**S72080**	Hub and Spindle Assembly	2
	S64970	Axle and Spindle Assembly - Prior to Serial Number QT40210486	
14	S68660	Tire and Rim Assembly - **By-Directional (From 2021 to Present)**	2
14A	K65091	Tire and Rim Assembly - **Right** (Shown) use on left side of machine (Prior to 2021)	2
	K65090	Tire and Rim Assembly - **Left** (Not Shown) use on right side of machine (Prior to 2021)	
15	S65305	Wing - Left	1
	S65310	Wing - Right (Not Shown)	1
16	S64335	Front Depth Beam (Includes items 20 and 22)	1
17	S66474	Rear Depth Beam - Left	1
	S66476	Rear Depth Beam - Right (Not Shown)	1
18	S66295	Castor - Wing - Left	1
	S66297	Castor - Wing - Right (Not Shown)	1
19	S64210	Wear Disc - 3 1/16 ID x 12 OD x 1/4 Thick	1
20	S64944	Bushing - 3.00 ID x 3.188 OD x 2 Lg	2
21	S64325	Bushing - Spring - 1.75 x 2.00 x 1.75 Lg Nominal Size	4
22	S-752	Grease Nipple	4
23	C25810	Decal - Grease 100 Hours	2
24	C25809	Decal - Grease 50 Hours	1

Frame - Wing
50 ft - 15m - Version 1

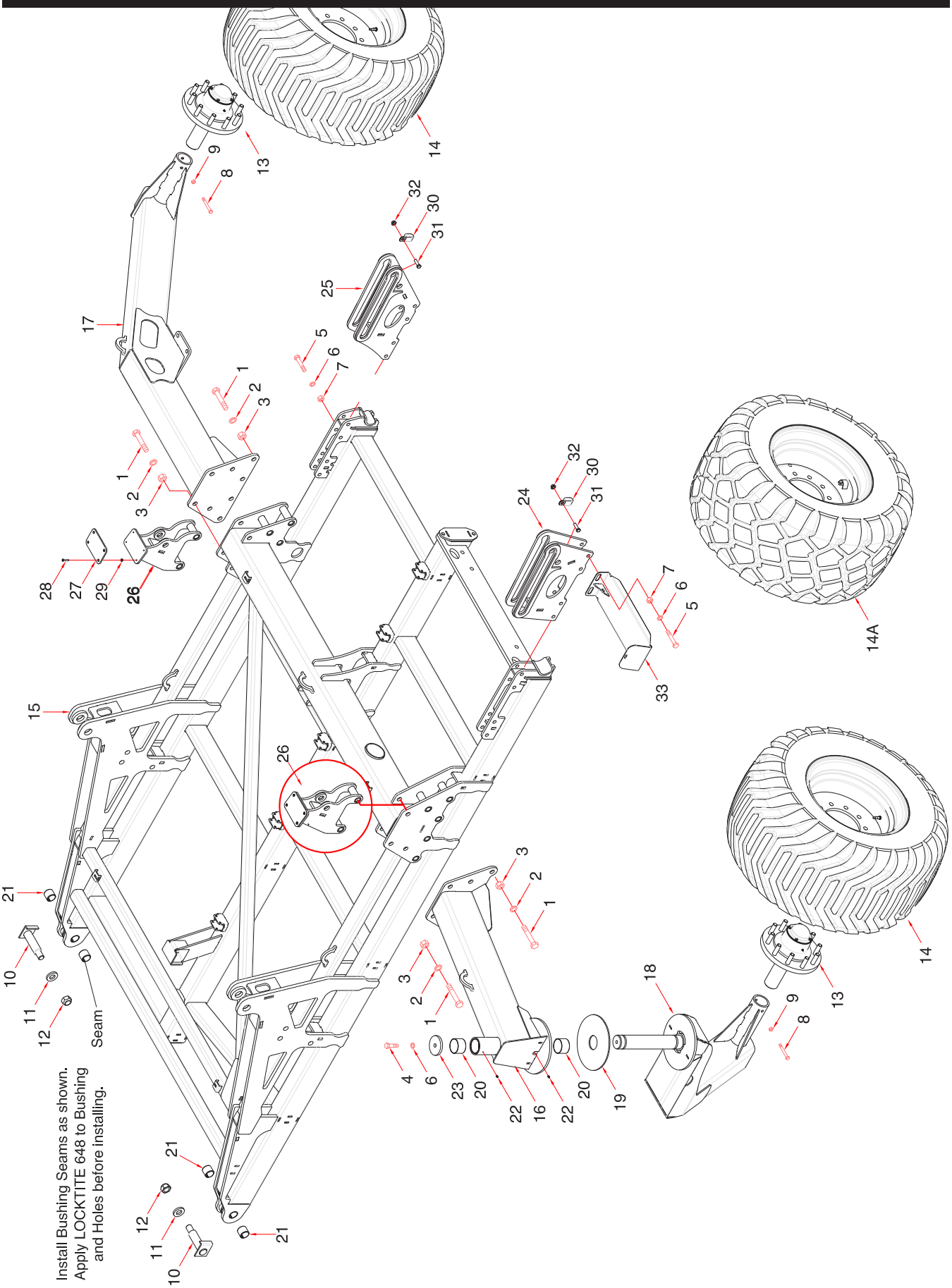

Frame - Wing - 50 ft - 15m - Version 1

Item	Part No.	Description	Qty
		Quantities given per Wing	
1	D12903	Hex Bolt - 1 x 7 Lg	16
2	C-705	Lockwasher - 1	16
3	W-520	Hex Nut - 1	16
4	C-695	Hex Bolt - 3/4 x 2 Lg	1
5	S-1191	Hex Bolt - 3/4 x 5 Lg	8
6	W-527	Lockwasher - 3/4	9
7	W-518	Hex Nut - 3/4	8
8	S-951	Bolt - 1/2 x 4 1/2 Lg	2
9	F-3405	Lock Nut - 1/2 Unitorque	2
10	S64305	Pin - 1 3/4 x 5 1/2 Lg	2
11	S26462	Washer - 1 1/4 ID x 2 1/2 OD x 3/8 Thick	2
12	S39780	Lock Nut - 1 1/4 Unitorque	2
13	**S72080**	Hub and Spindle Assembly	2
	S64970	Axle and Spindle Assembly - Prior to Serial Number QT50210561	
14	**K65091**	Tire and Rim Assembly - **Right** (Shown) . . . use on left side of machine	2
	K65090	Tire and Rim Assembly - **Left** (Not Shown) . . . use on right side of machine	
14A	S68660	Tire and Rim Assembly - **By-Directional**	
15	S65305	Wing - Left	1
	S65310	Wing - Right (Not Shown)	1
16	S64335	Front Depth Beam (Includes items 20 and 22)	1
17	S66474	Rear Depth Beam - Left	1
	S66476	Rear Depth Beam - Right (Not Shown)	1
18	S66295	Castor - Wing - Left	1
	S66297	Castor - Wing - Right (Not Shown)	1
19	S64210	Wear Disc - 3 1/16 ID x 12 OD x 1/4 Thick	1
20	S64944	Bushing - 3.00 ID x 3.188 OD x 2 Lg	2
21	S64325	Bushing - Spring - 1.75 x 2.00 x 1.75 Lg Nominal Size	4
22	S-752	Grease Nipple	2
	C25809	Decal - Grease 50 Hours (Not Shown)	1
23	S64303	Cap - Castor Wing - 4 1/4 Dia	1
24	S65340	Front Flip Hinge	1
25	S65345	Rear Flip Hinge	1
26	S65365	Wing Rest	2
27	S64416	Wear Pad	2
28	C32741	Hex Socket Countersunk Screw - 1/4 x 1 Lg	8
29	N15757	Locknut - 1/4 - 20 UNC	8
30	S66255	Hose Holder	2
31	W-475	Hex Bolt - 3/8 x 1 Lg	2
32	D-5279	Locknut - 3/8 Serrated	2
33	N67295	Primary Hose Guide Plate - Wing	1

Frame - Wing
50 ft - 15m - Version 2

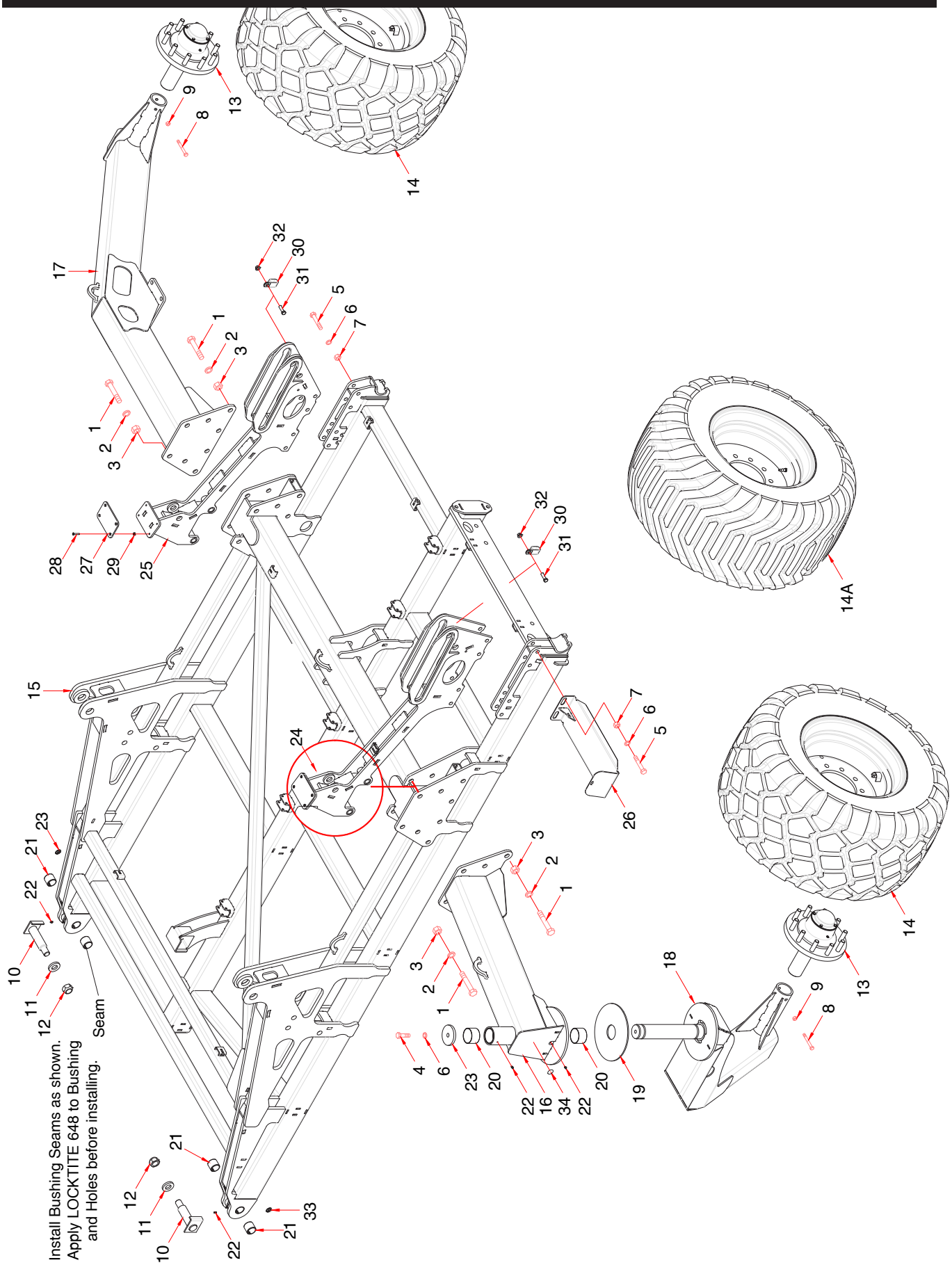

Frame - Wing - 50 ft - 15m - Version 2

Item	Part No.	Description	Qty
		Quantities given per Wing	
1	D12903	Hex Bolt - 1 x 7 Lg	16
2	C-705	Lockwasher - 1	16
3	W-520	Hex Nut - 1	16
4	C-695	Hex Bolt - 3/4 x 2 Lg	1
5	S-1191	Hex Bolt - 3/4 x 5 Lg	8
6	W-527	Lockwasher - 3/4	9
7	W-518	Hex Nut - 3/4	8
8	S-951	Bolt - 1/2 x 4 1/2 Lg	2
9	F-3405	Lock Nut - 1/2 Unitorque	2
10	S64305	Pin - 1 3/4 x 5 1/2 Lg	2
11	S26462	Washer - 1 1/4 ID x 2 1/2 OD x 3/8 Thick	2
12	S39780	Lock Nut - 1 1/4 Unitorque	2
13	**S72080**	Hub and Spindle Assembly	2
	S64970	Axle and Spindle Assembly - Prior to Serial Number QT50210561	
14	S68660	Tire and Rim Assembly - **By-Directional (From 2021 to Present)**	2
14A	K65091	Tire and Rim Assembly - **Right** (Shown) use on left side of machine (Prior to 2021)	2
	K65090	Tire and Rim Assembly - **Left** (Not Shown) use on right side of machine (Prior to 2021)	
15	S65305	Wing - Left	1
	S65310	Wing - Right (Not Shown)	1
16	S64335	Front Depth Beam (Includes items 20 and 22)	1
17	S66474	Rear Depth Beam - Left	1
	S66476	Rear Depth Beam - Right (Not Shown)	1
18	S66295	Castor - Wing - Left	1
	S66297	Castor - Wing - Right (Not Shown)	1
19	S64210	Wear Disc - 3 1/16 ID x 12 OD x 1/4 Thick	1
20	S64944	Bushing - 3.00 ID x 3.188 OD x 2 Lg	2
21	S64325	Bushing - Spring - 1.75 x 2.00 x 1.75 Lg Nominal Size	4
22	S-752	Grease Nipple	4
23	S64303	Cap - Castor Wing - 4 1/4 Dia	1
24	S68805	Front Flip Hinge	1
25	S68809	Rear Flip Hinge	1
26	N67295	Primary Hose Guide Plate - Wing	1
27	S64416	Wear Pad	2
28	C32741	Hex Socket Countersunk Screw - 1/4 x 1 Lg	8
29	N15757	Locknut - 1/4 - 20 UNC	8
30	S68415	Hose Holder	2
31	W-475	Hex Bolt - 3/8 x 1 Lg	2
32	D-5279	Locknut - 3/8 Serrated	2
33	C25810	Decal - Grease 100 Hours	2
34	C25809	Decal - Grease 50 Hours	1

Frame - Wing
50 ft - 15m - Flip Wing

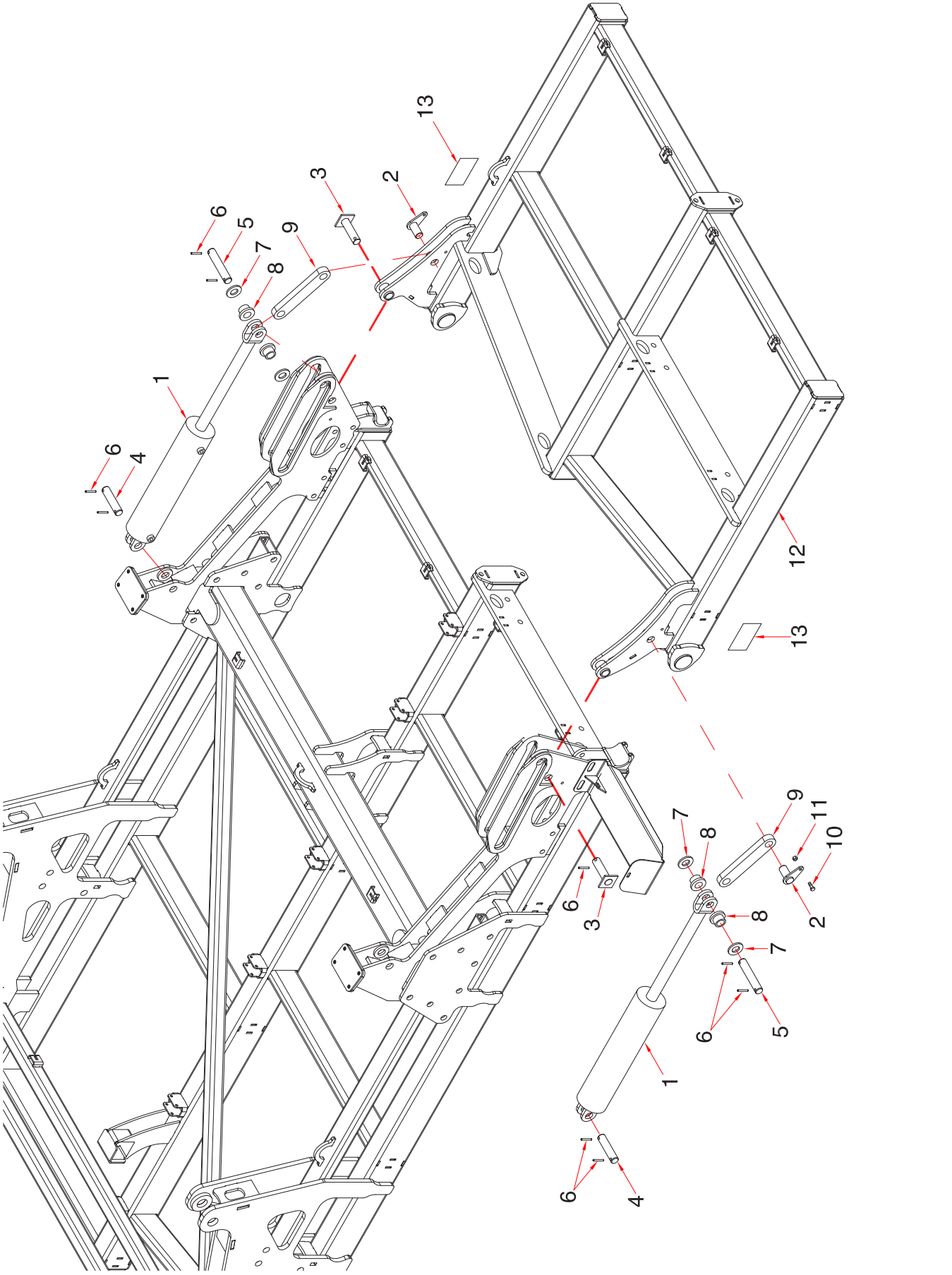

Frame - Wing - 50 ft - 15m - Flip Wing

Item	Part No.	Description	Qty
		Quantities given per Wing	
1	C65366	Cylinder - 4 1/2 x 18	2
2	S65374	Pin - 1 1/4 x 2 3/8 UL	2
3	S45796	Pin - 1 1/4 x 4 1/16 UL	2
4	S65372	Pin - 1 1/4 x 4 1/4 UL	2
5	S65368	Pin - 1 1/4 x 5 5/8 UL	2
6	T-5245	Spiral Pin - 3/8 x 2 1/2 Lg	10
7	N13962	Flat Washer - 1 9/32 ID x 2 1/2 OD x 1/4 Thick	4
8	S65367	Wing Lift Roller - 1.281 ID x 1.75 OD x 2 1/2 OD x 1 13/32 Lg	4
9	S65369	Wing Lift Link - 1 x 2 3/8 x 11 5/8 Lg - 1.281 Dia holes - 9 1/4 Hole Centers	2
10	W-187	Hex Bolt - 3/8 x 1 1/4	2
11	M-3388	Hex Lock Nut - 3/8	2
12	S65350	Wing - Left	1
	S65355	Wing - Right (Not Shown)	1
13	S65153	Decal - Danger: Crushing Hazard	2

Frame - Wing
60 ft - 18m - Inner Wing

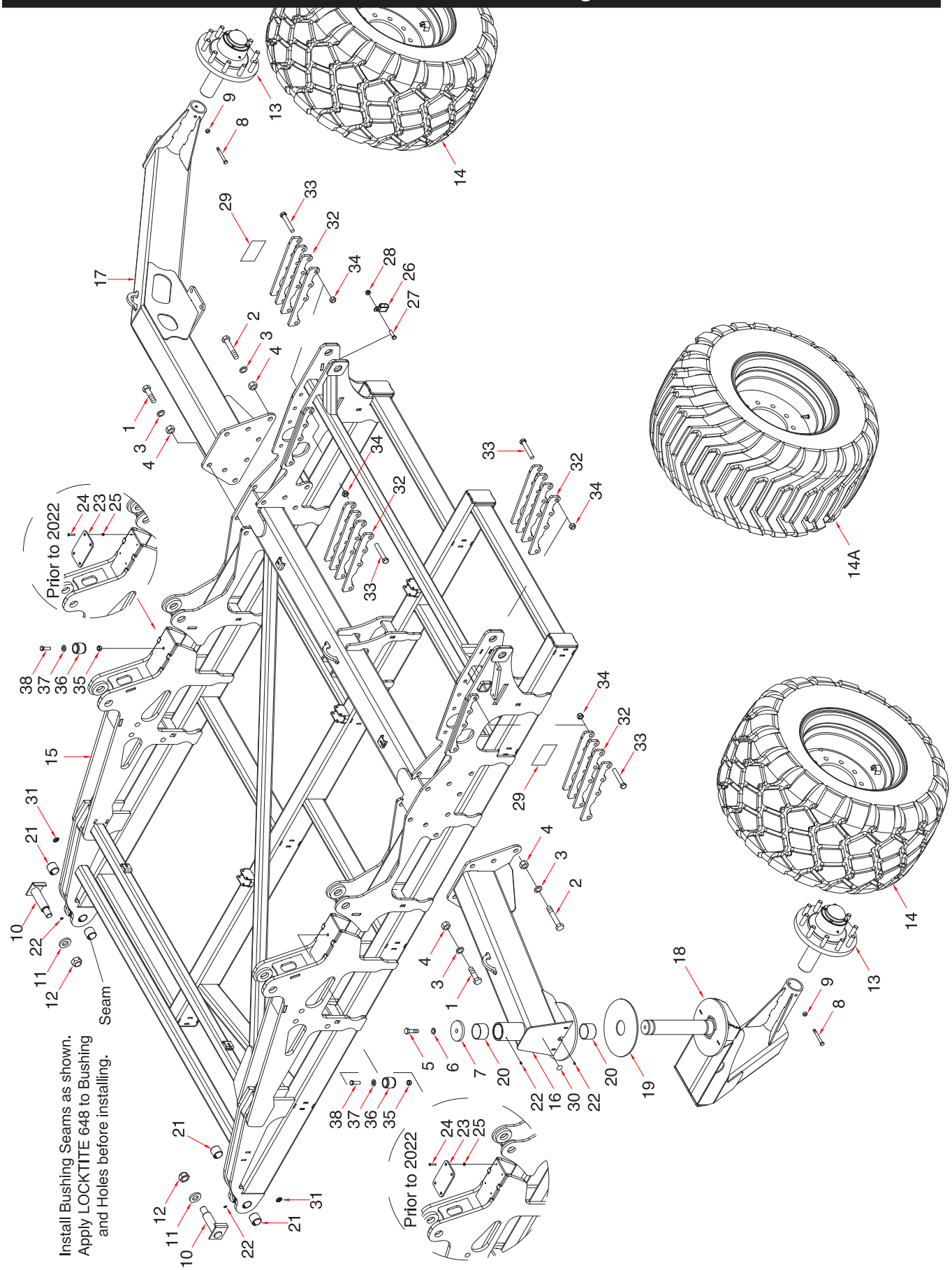

Frame - Wing - 60 ft - 18m - Inner Wing

Item	Part No.	Description	Qty
		Quantities given per Wing	
1	J12344	Hex Bolt - 1 x 3 Lg (Prior to 2022)	4
	D12903	Hex Bolt - 1 x 7 Lg **(From 2022 to Present)**	4
2	D12903	Hex Bolt - 1 x 7 Lg	12
3	C-705	Lockwasher - 1	16
4	W-520	Hex Nut - 1	16
5	C-695	Hex Bolt - 3/4 x 2 Lg	1
6	W-527	Lockwasher - 3/4	1
7	S64303	Cap - Castor Wing - 4 1/4 Dia	1
8	S-951	Bolt - 1/2 x 4 1/2 Lg	2
9	F-3405	Lock Nut - 1/2 Unitorque	2
10	S64305	Pin - 1 3/4 x 5 1/2 Lg	2
11	S26462	Washer - 1 1/4 ID x 2 1/2 OD x 3/8 Thick	2
12	S39780	Lock Nut - 1 1/4 Unitorque	2
13	**S72080**	Hub and Spindle Assembly	2
	S64970	Axle and Spindle Assembly - Prior to Serial Number QT60210745	
14	S68660	Tire and Rim Assembly - **By-Directional (From 2021 to Present)**	2
14A	K65091	Tire and Rim Assembly - **Right** (Shown) use on left side of machine (Prior to 2021)	2
	K65090	Tire and Rim Assembly - **Left** (Not Shown) use on right side of machine (Prior to 2021)	
15	S64961	Wing Inner - Left	1
	S64963	Wing Inner - Right (Not Shown)	1
16	S64335	Front Depth Beam (Includes items 20, 22 and 30)	1
17	S66474	Rear Depth Beam - Left	1
	S66476	Rear Depth Beam - Right (Not Shown)	1
18	S66295	Castor - Wing - Left	1
	S66297	Castor - Wing - Right (Not Shown)	1
19	S64210	Wear Disc - 3 1/16 ID x 12 OD x 1/4 Thick	1
20	S64944	Bushing - 3.00 ID x 3.188 OD x 2 Lg	2
21	S64325	Bushing - Spring - 1.75 x 2.00 x 1.75 Lg Nominal Size	4
22	S-752	Grease Nipple	4
23	S64416	Wear Pad - (Prior to 2022)	2
24	C32741	Hex Socket Countersunk Screw - 1/4 x 1 Lg - (Prior to 2022)	8
25	N15757	Locknut - 1/4 - 20 UNC - (Prior to 2022)	8
26	S68415	Hose Holder	2
27	W-475	Hex Bolt - 3/8 x 1 Lg	2
28	D-5279	Locknut - 3/8 Serrated	2
29	S65153	Decal - Danger: Crushing Hazard	2
30	C25809	Decal - Grease 50 Hours	1
		(Below Items From 2022 to Present)	
31	C25810	Decal - Grease 100 Hours	2
32	S71923	Support - Wing Lift Roller	16
33	S-1175	Bolt - 3/4 x 4 1/2 Lg	16
34	D-5273	Locknut - 3/4 Unitorque	16
35	F-3405	Locknut - 1/2 Unitorque	2
36	11678	Bump Stop	2
37	S-1925	Washer - 17/32 ID x 1 OD x 13 GA	2
38	W-486	Bolt - 1/2 x 1 1/2 Lg	2

Frame - Wing
60 ft - 18m - Outer Wing

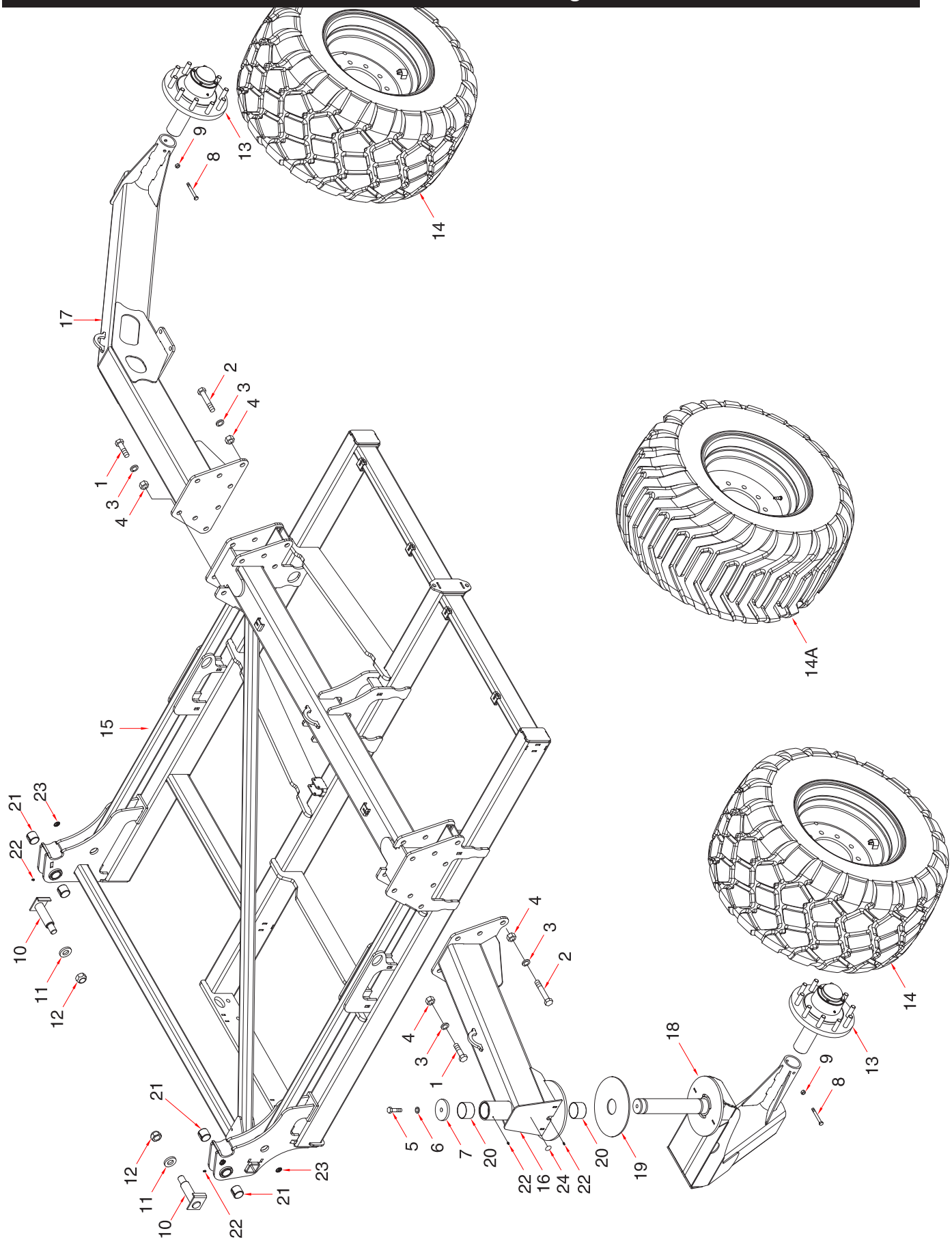

Frame - Wing - 60 ft - 18m - Outer Wing

Item	Part No.	Description	Qty
		Quantities given per Wing	
1	J12344	Hex Bolt - 1 x 3 Lg (Prior to 2022)	4
	D12903	Hex Bolt - 1 x 7 Lg **(From 2022 to Present)**	4
2	D12903	Hex Bolt - 1 x 7 Lg	12
3	C-705	Lockwasher - 1	16
4	W-520	Hex Nut - 1	16
5	C-695	Hex Bolt - 3/4 x 2 Lg	1
6	W-527	Lockwasher - 3/4	1
7	S64303	Cap - Castor Wing - 4 1/4 Dia	1
8	S-951	Bolt - 1/2 x 4 1/2 Lg	2
9	F-3405	Lock Nut - 1/2 Unitorque	2
10	S64305	Pin - 1 3/4 x 5 1/2 Lg	2
11	S26462	Washer - 1 1/4 ID x 2 1/2 OD x 3/8 Thick	2
12	S39780	Lock Nut - 1 1/4 Unitorque	2
13	**S72080**	Hub and Spindle Assembly	2
	S64970	Axle and Spindle Assembly - Prior to Serial Number QT60210745	
14	S68660	Tire and Rim Assembly - **By-Directional (From 2021 to Present)**	2
14A	K65091	Tire and Rim Assembly - **Right** (Shown) use on left side of machine (Prior to 2021)	2
	K65090	Tire and Rim Assembly - **Left** (Not Shown) use on right side of machine (Prior to 2021)	
15	S64967	Wing Outer - Left	1
	S64969	Wing Outer - Right (Not Shown)	1
16	S64335	Front Depth Beam (Includes items 20 and 22)	1
17	S66474	Rear Depth Beam - Left	1
	S66476	Rear Depth Beam - Right (Not Shown)	1
18	S66295	Castor - Wing - Left	1
	S66297	Castor - Wing - Right (Not Shown)	1
19	S64210	Wear Disc - 3 1/16 ID x 12 OD x 1/4 Thick	1
20	S64944	Bushing - 3.00 ID x 3.188 OD x 2 Lg	2
21	S64325	Bushing - Spring - 1.75 x 2.00 x 1.75 Lg Nominal Size	4
22	S-752	Grease Nipple	4
23	C25810	Decal - Grease 100 Hours	2
24	C25809	Decal - Grease 50 Hours	1

Frame - Wing
70 ft - 21m - Inner Wing

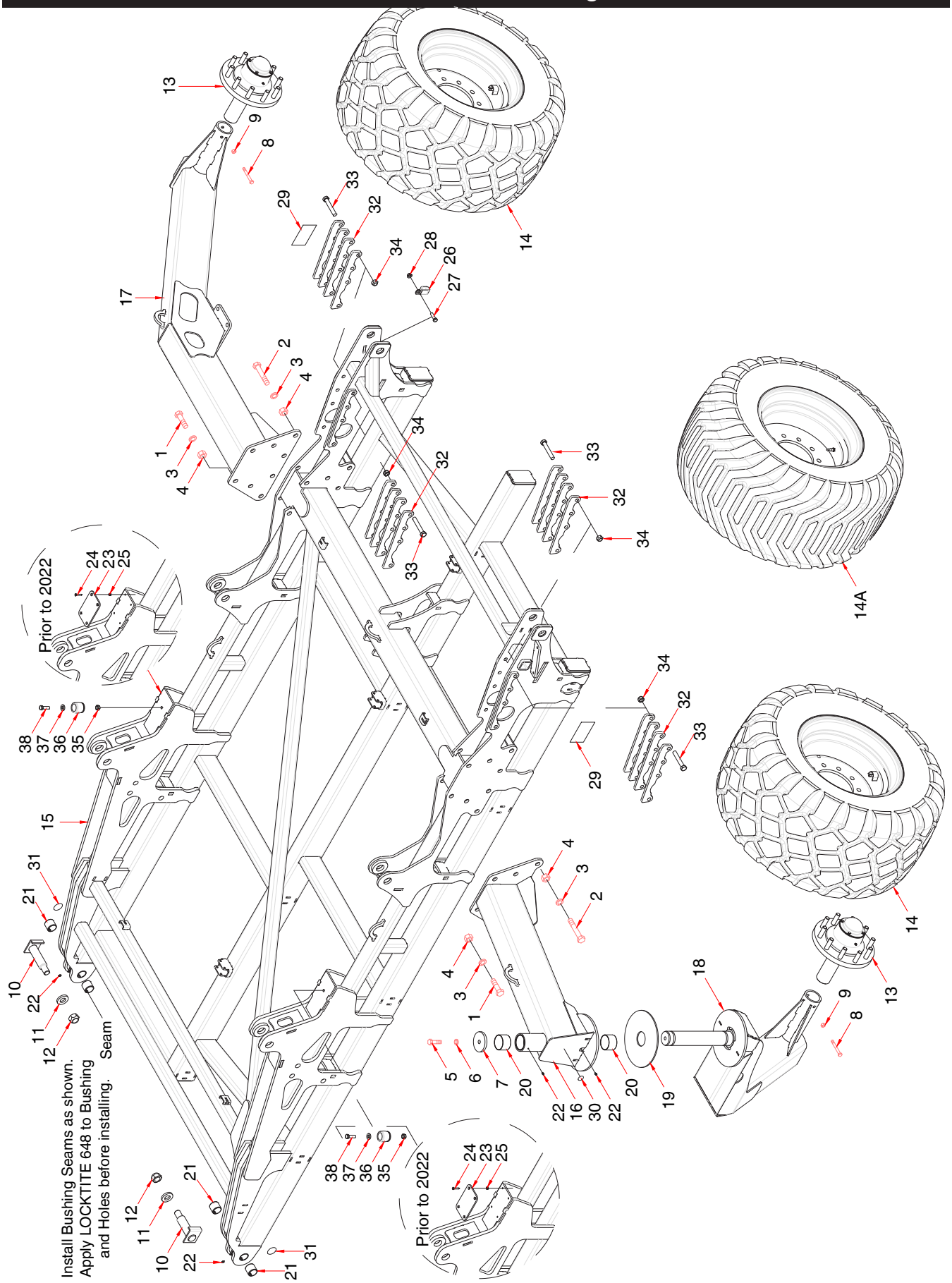

Frame - Wing - 70 ft - 21m - Inner Wing

Item	Part No.	Description	Qty
		Quantities given per Wing	
1	J12344	Hex Bolt - 1 x 3 Lg (Prior to 2022)	4
	D12903	Hex Bolt - 1 x 7 Lg **(From 2022 to Present)**	4
2	D12903	Hex Bolt - 1 x 7 Lg	12
3	C-705	Lockwasher - 1	16
4	W-520	Hex Nut - 1	16
5	C-695	Hex Bolt - 3/4 x 2 Lg	1
6	W-527	Lockwasher - 3/4	1
7	S64303	Cap - Castor Wing - 4 1/4 Dia	1
8	S-951	Bolt - 1/2 x 4 1/2 Lg	2
9	F-3405	Lock Nut - 1/2 Unitorque	2
10	S64305	Pin - 1 3/4 x 5 1/2 Lg	2
11	S26462	Washer - 1 1/4 ID x 2 1/2 OD x 3/8 Thick	2
12	S39780	Lock Nut - 1 1/4 Unitorque	2
13	**S72080**	Hub and Spindle Assembly	2
	S64970	Axle and Spindle Assembly - Prior to Serial Number QT70210794	
14	S68660	Tire and Rim Assembly - **By-Directional (From 2021 to Present)**	2
14A	K65091	Tire Rim Assembly - **Right** (Shown) use on left side of machine (Prior to 2021)	2
	K65090	Tire Rim Assembly - **Left** (Not Shown) use on right side of machine (Prior to 2021)	
15	S64290	Wing Inner - Left	1
	S64250	Wing Inner - Right (Not Shown)	1
16	S64335	Front Depth Beam (Includes items 20 and 22)	1
17	S66474	Rear Depth Beam - Left	1
	S66476	Rear Depth Beam - Right (Not Shown)	1
18	S66295	Castor - Wing - Left	1
	S66297	Castor - Wing - Right (Not Shown)	1
19	S64210	Wear Disc - 3 1/16 ID x 12 OD x 1/4 Thick	1
20	S64944	Bushing - 3.00 ID x 3.188 OD x 2 Lg	2
21	S64325	Bushing - Spring - 1.75 x 2.00 x 1.75 Lg Nominal Size	4
22	S-752	Grease Nipple	4
23	S64416	Wear Pad - (Prior to 2022)	2
24	C32741	Hex Socket Countersunk Screw - 1/4 x 1 Lg - (Prior to 2022)	8
25	N15757	Locknut - 1/4 - 20 UNC - (Prior to 2022)	8
26	S68415	Hose Holder	2
27	W-475	Hex Bolt - 3/8 x 1 Lg	2
28	D-5279	Locknut - 3/8 Serrated	2
29	S65153	Decal - Danger: Crushing Hazard	2
30	C25809	Decal - Grease 50 Hours (Not Shown)	1
		(Below Items From 2022 to Present)	
31	C25810	Decal - Grease 100 Hours (Not Shown)	2
32	S71923	Support - Wing Lift Roller	16
33	S-1175	Bolt - 3/4 x 4 1/2 Lg	16
34	D-5273	Locknut - 3/4 Unitorque	16
35	F-3405	Locknut - 1/2 Unitorque	2
36	11678	Bump Stop	2
37	S-1925	Washer - 17/32 ID x 1 OD x 13 GA	2
38	W-486	Bolt - 1/2 x 1 1/2 Lg	2

Frame - Wing
70 ft - 21m - Outer Wing

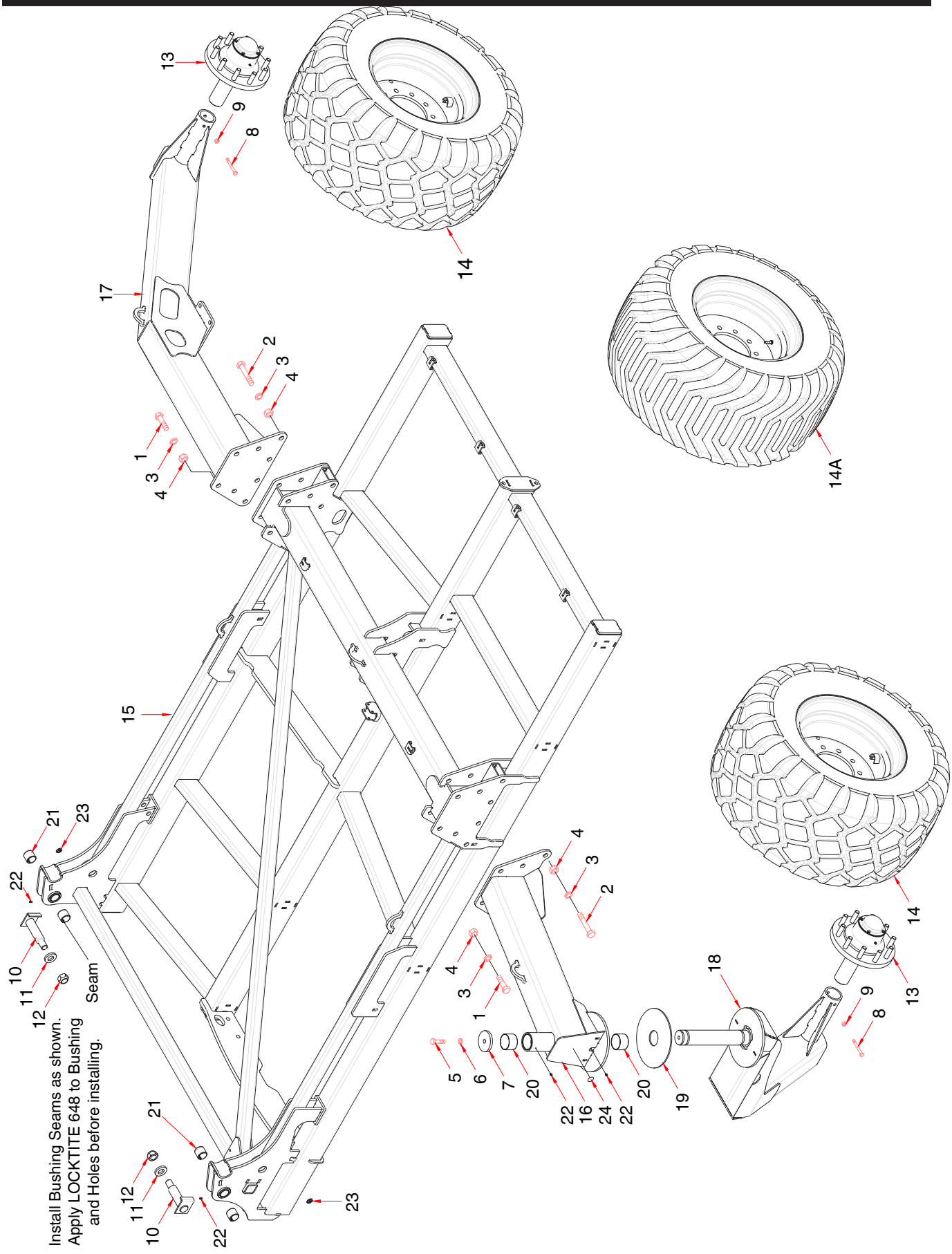

Frame - Wing - 70 ft - 21m - Outer Wing

Item	Part No.	Description	Qty
		Quantities given per Wing	
1	J12344	Hex Bolt - 1 x 3 Lg (Prior to 2022)	4
	D12903	Hex Bolt - 1 x 7 Lg **(From 2022 to Present)**	4
2	D12903	Hex Bolt - 1 x 7 Lg	12
3	C-705	Lockwasher - 1	16
4	W-520	Hex Nut - 1	16
5	C-695	Hex Bolt - 3/4 x 2 Lg	1
6	W-527	Lockwasher - 3/4	1
7	S64303	Cap - Castor Wing - 4 1/4 Dia	1
8	S-951	Bolt - 1/2 x 4 1/2 Lg	2
9	F-3405	Lock Nut - 1/2 Unitorque	2
10	S64305	Pin - 1 3/4 x 5 1/2 Lg	2
11	S26462	Washer - 1 1/4 ID x 2 1/2 OD x 3/8 Thick	2
12	S39780	Lock Nut - 1 1/4 Unitorque	2
13	**S72080**	Hub and Spindle Assembly	2
	S64970	Axle and Spindle Assembly - Prior to Serial Number QT70210794	
14	S68660	Tire and Rim Assembly - **By-Directional (From 2021 to Present)**	2
14A	K65091	Tire Rim Assembly - **Right** (Shown) use on left side of machine (Prior to 2021)	2
	K65090	Tire Rim Assembly - **Left** (Not Shown) use on right side of machine (Prior to 2021)	
15	S64270	Wing Outer - Left	1
	S64260	Wing Outer - Right (Not Shown)	1
16	S64335	Front Depth Beam (Includes items 20 and 22)	1
17	S66474	Rear Depth Beam - Left	1
	S66476	Rear Depth Beam - Right (Not Shown)	1
18	S66295	Castor - Wing - Left	1
	S66297	Castor - Wing - Right (Not Shown)	1
19	S64210	Wear Disc - 3 1/16 ID x 12 OD x 1/4 Thick	1
20	S64944	Bushing - 3.00 ID x 3.188 OD x 2 Lg	2
21	S64325	Bushing - Spring - 1.75 x 2.00 x 1.75 Lg Nominal Size	4
22	S-752	Grease Nipple	4
23	C25810	Decal - Grease 100 Hours	2
24	C25809	Decal - Grease 50 Hours	1

Frame - Wing
80 ft - 24m - Inner Wing

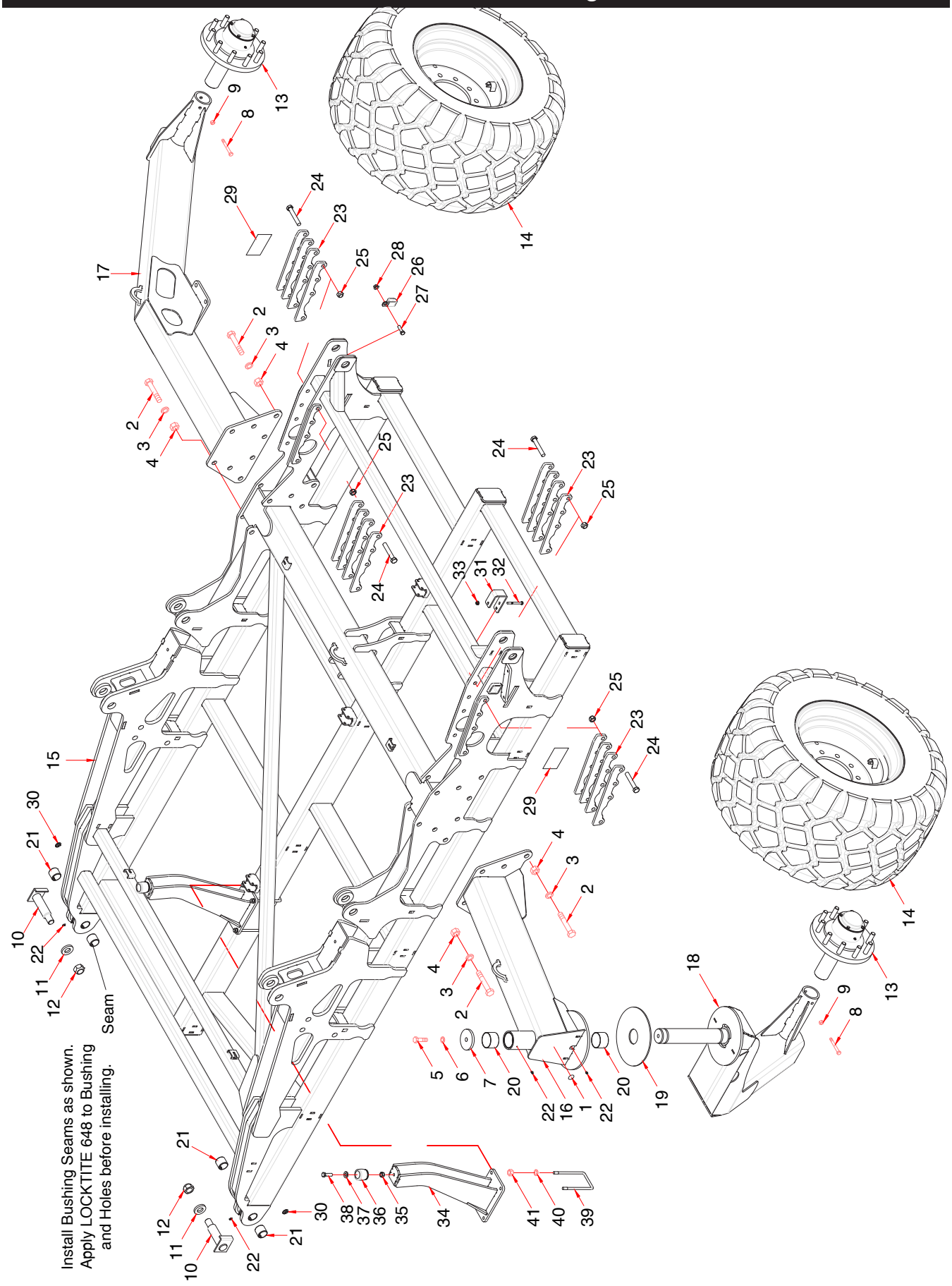

Frame - Wing - 80 ft - 24m - Inner Wing

Item	Part No.	Description	Qty
		Quantities given per Wing	
1	C25809	Decal - Grease 50 Hours	1
2	D12903	Hex Bolt - 1 x 7 Lg	16
3	C-705	Lockwasher - 1	16
4	W-520	Hex Nut - 1	16
5	C-695	Hex Bolt - 3/4 x 2 Lg	1
6	W-527	Lockwasher - 3/4	1
7	S64303	Cap - Castor Wing - 4 1/4 Dia	1
8	S-951	Bolt - 1/2 x 4 1/2 Lg	2
9	F-3405	Lock Nut - 1/2 Unitorque	2
10	S64305	Pin - 1 3/4 x 5 1/2 Lg	2
11	S26462	Washer - 1 1/4 ID x 2 1/2 OD x 3/8 Thick	2
12	S39780	Lock Nut - 1 1/4 Unitorque	2
13	**S72080**	Hub and Spindle Assembly	2
14	S68660	Tire and Rim Assembly	2
15	S64961	Wing Inner - Left	1
	S64963	Wing Inner - Right (Not Shown)	1
16	S64335	Front Depth Beam (Includes items 20, 22 and 30)	1
17	S66474	Rear Depth Beam - Left	1
	S66476	Rear Depth Beam - Right (Not Shown)	1
18	S66295	Castor - Wing - Left	1
	S66297	Castor - Wing - Right (Not Shown)	1
19	S64210	Wear Disc - 3 1/16 ID x 12 OD x 1/4 Thick	1
20	S64944	Bushing - 3.00 ID x 3.188 OD x 2 Lg	2
21	S64325	Bushing - Spring - 1.75 x 2.00 x 1.75 Lg Nominal Size	4
22	S-752	Grease Nipple	4
23	S71923	Support - Wing Lift Roller	16
24	S-1175	Bolt - 3/4 x 4 1/2 Lg	16
25	D-5273	Locknut - 3/4 Unitorque	16
26	S68415	Hose Holder	2
27	W-475	Hex Bolt - 3/8 x 1 Lg	2
28	D-5279	Locknut - 3/8 Serrated	2
29	S65153	Decal - Danger: Crushing Hazard	2
30	C25810	Decal - Grease 100 Hours	2
31	S72949	Bracket Hydraulic Hoses (Left side shown. Mounts to the back on Right side)	1
32	W-481	Hex Bolt - 3/8 x 3 1/2 Lg	1
33	S27987	Lock Nut - 3/8 Flanged	1
34	S76465	Wing Bump Stop	1
35	F-3405	Locknut - 1/2 Unitorque	1
36	11678	Bump Stop	1
37	S-1925	Washer - 17/32 ID x 1 OD x 13 GA	1
38	W-486	Bolt - 1/2 x 1 1/2 Lg	1
39	C-3932	U-Bolt - 1/2 X 4 X 7 1/4 UL	2
40	W-525	Lockwasher - 1/2	4
41	W-516	Hex Nut - 1/2	4

Frame - Wing
80 ft - 24m - Outer Wing

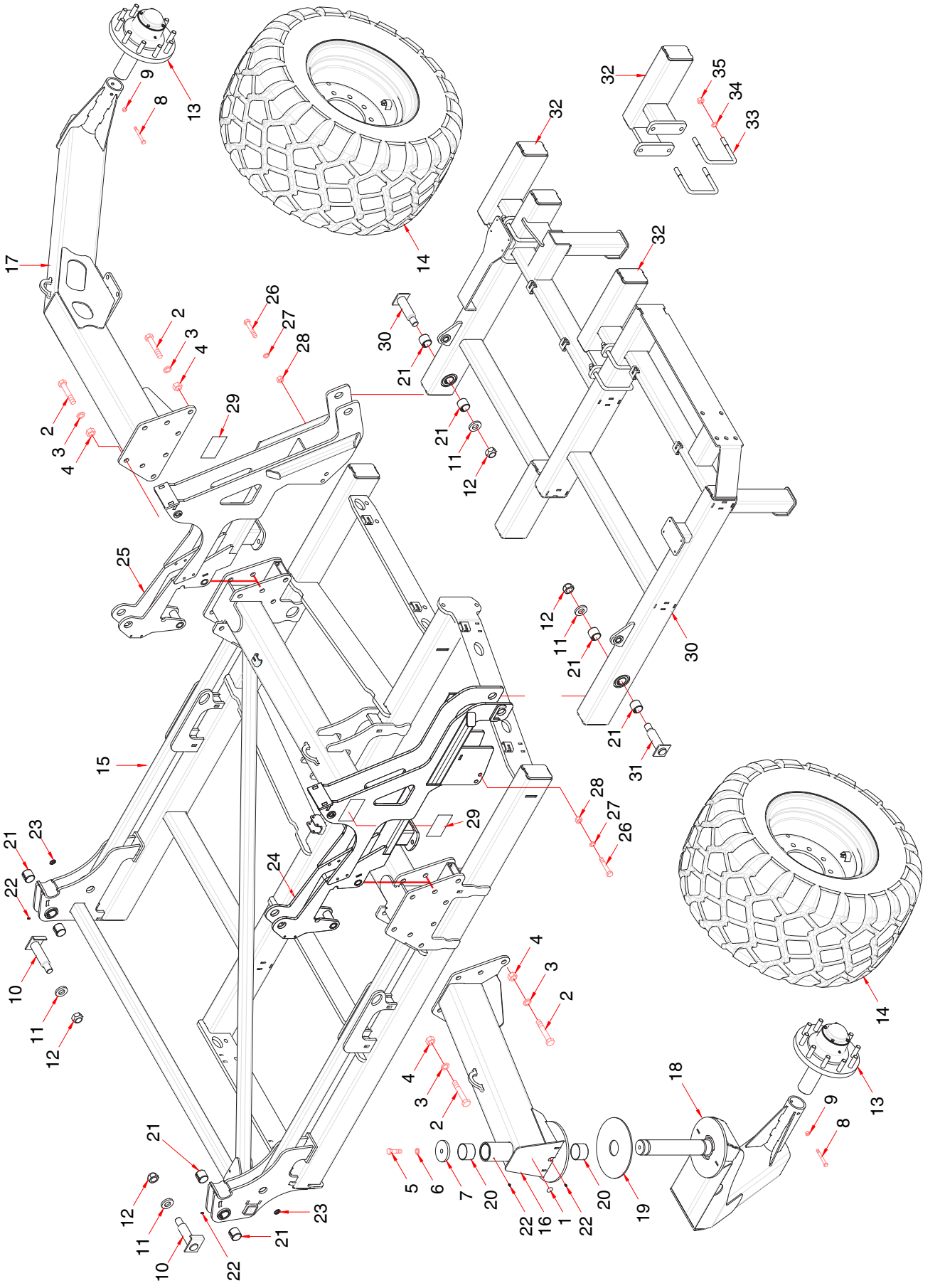

Frame - Wing - 80 ft - 24m - Outer Wing

Item	Part No.	Description	Qty
		Quantities given per Wing	
1	C25809	Decal - Grease 50 Hours	1
2	D12903	Hex Bolt - 1 x 7 Lg	16
3	C-705	Lockwasher - 1	16
4	W-520	Hex Nut - 1	16
5	C-695	Hex Bolt - 3/4 x 2 Lg	1
6	W-527	Lockwasher - 3/4	1
7	S64303	Cap - Castor Wing - 4 1/4 Dia	1
8	S-951	Bolt - 1/2 x 4 1/2 Lg	2
9	F-3405	Lock Nut - 1/2 Unitorque	2
10	S64305	Pin - 1 3/4 x 5 1/2 Lg	2
11	S26462	Washer - 1 1/4 ID x 2 1/2 OD x 3/8 Thick	2
12	S39780	Lock Nut - 1 1/4 Unitorque	2
13	**S72080**	Hub and Spindle Assembly	2
14	S68660	Tire and Rim Assembly - **By-Directional**	2
15	S72480	Wing Outer - Left	1
	S72485	Wing Outer - Right (Not Shown)	1
16	S64335	Front Depth Beam (Includes items 20 and 22)	1
17	S66474	Rear Depth Beam - Left	1
	S66476	Rear Depth Beam - Right (Not Shown)	1
18	S66295	Castor - Wing - Left	1
	S66297	Castor - Wing - Right (Not Shown)	1
19	S64210	Wear Disc - 3 1/16 ID x 12 OD x 1/4 Thick	1
20	S64944	Bushing - 3.00 ID x 3.188 OD x 2 Lg	2
21	S64325	Bushing - Spring - 1.75 x 2.00 x 1.75 Lg Nominal Size	4
22	S-752	Grease Nipple	4
23	C25810	Decal - Grease 100 Hours	2
24	S72640	Mount Flipwing - Front - 12 inch spacing (Shown)	1
	S72650	Mount Flipwing - Front - 10 inch spacing	1
25	S72650	Mount Flipwing - Back	1
26	D-5558	Bolt - 3/4 x 6 Lg	4
27	W-527	Lockwasher - 3/4	4
28	W-518	Hex Nut - 3/4	4
29	S65153	Decal - Danger: Crushing Hazard	2
		Flip Wing	
30	S72655	Flip Wing - Left	1
	S72660	Flip Wing - Right (Not Shown)	1
31	S72970	Pin - 1 3/4 x 5 UL 6 15/16 LG	2
11	S26462	Washer - 1 1/4 ID x 2 1/2 OD x 3/8 Thick	2
12	S39780	Lock Nut - 1 1/4 Unitorque	2
21	S64325	Bushing - Spring - 1.75 x 2.00 x 1.75 Lg Nominal Size	4
		80ft ONLY	
32	S72842	Extension Stub - 4th Row	2
33	S64958	U-Bolt - 3/4 x 6 x 6 1/4 UL	4
34	W-527	Lockwasher - 3/4	8
35	W-518	Hex Nut - 3/4	8

Frame - Wing
80 ft - 24m - Flip Wing

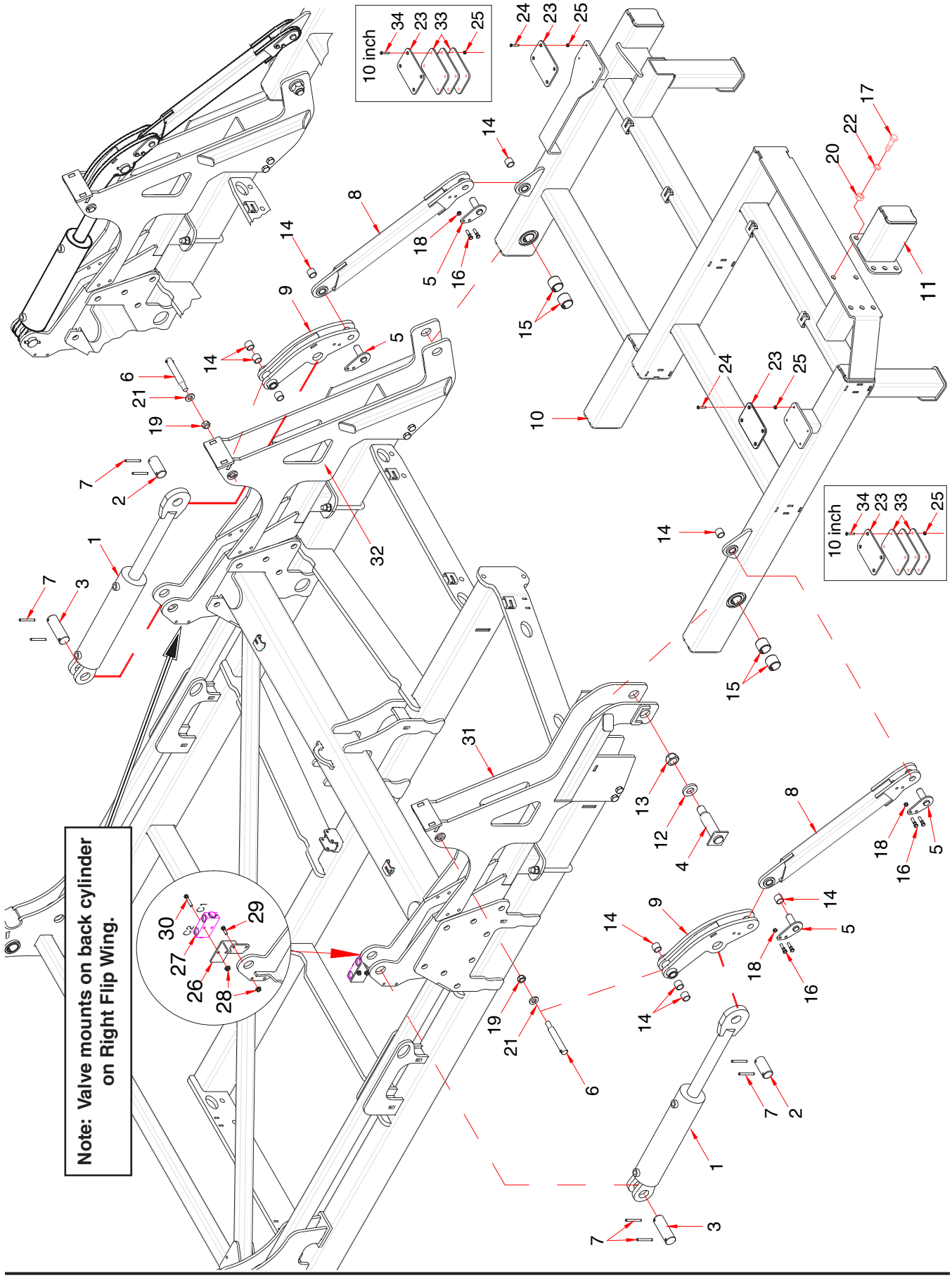

Frame - Wing - 80 ft - 24m - Flip Wing

Item	Part No.	Description	Qty
		Quantities given per Wing	
1	C72344	Cylinder - 4 1/2 x 18	2
2	S72683	Pin - 1 3/4 x 2 9/16 UL	2
3	S72684	Pin - 1 3/4 x 4 3/16 UL	2
4	S72970	Pin - 1 3/4 x 5 UL (6 15/16 LG)	2
5	S72680	Pin - 1 x 2 9/16 UL	4
6	S69573	Pin - Chrome - 1 Dia x 5 1/16 UL	2
7	K-3832	Spiral Pin - 3/8 x 3 Lg	8
8	S72670	Wing Lift Link	2
9	S72675	Wing Lift Link	2
10	S72655	Flip Wing - Left	1
	S72660	Flip Wing - Right (Not Shown)	1
11	S72638	Extension Stub - 80 ft only (Not used on 24m)	1
12	S26462	Washer - 1 1/4 ID x 2 1/2 OD x 3/8 Thick	2
13	S39780	Lock Nut - 1 1/4 Unitorque	2
14	S72410	Bushing - 1 ID x 1 1/4 OD x 1 Lg Nominal size	10
15	S64325	Bushing - Spring - 1.75 x 2.00 x 1.75 Lg Nominal Size	4
16	W-477	Hex Bolt - 3/8 x 1 1/2 Lg	8
17	C-695	Hex Bolt - 3/4 x 2 Lg	5
18	M-3388	Lock Nut - 3/8	8
19	D-5275	Lock Nut - 3/4 Nylon Insert	2
20	W-518	Hex Nut - 3/4	5
21	W-476	Washer - 13/16 ID x 1.469 OD x .134 Thick	2
22	W-527	Lockwasher - 3/4	5
23	S64416	Wear Pad	2
24	C32741	Hex Socket Countersunk Screw - 1/4 x 1 Lg - 12 inch spacing	8
25	N15757	Lock Nut - 1/4 - 20 UNC	8
26	S72948	Valve Mount	1
27	K68627	Valve	1
28	D-5279	Locknut - 3/8 Flanged	2
29	W-187	Hex Bolt - 3/8 x 1 1/4 Lg	2
30	W-478	Hex Bolt - 3/8 x 2 Lg	2
31	S72640	Mount Flipwing - Front - 12 inch spacing (Shown)	1
	S72650	Mount Flipwing - Front - 10 inch spacing	1
32	S72650	Mount Flipwing - Back	1
33	S67474	Spacer Plate - 1/4 - 10 inch spacing	6
34	S67473	Countersunk Screw - 1/4 x 1 3/4 Lg - 10 inch spacing	8

Frame - Wing
80 ft - 24m - 4th Row

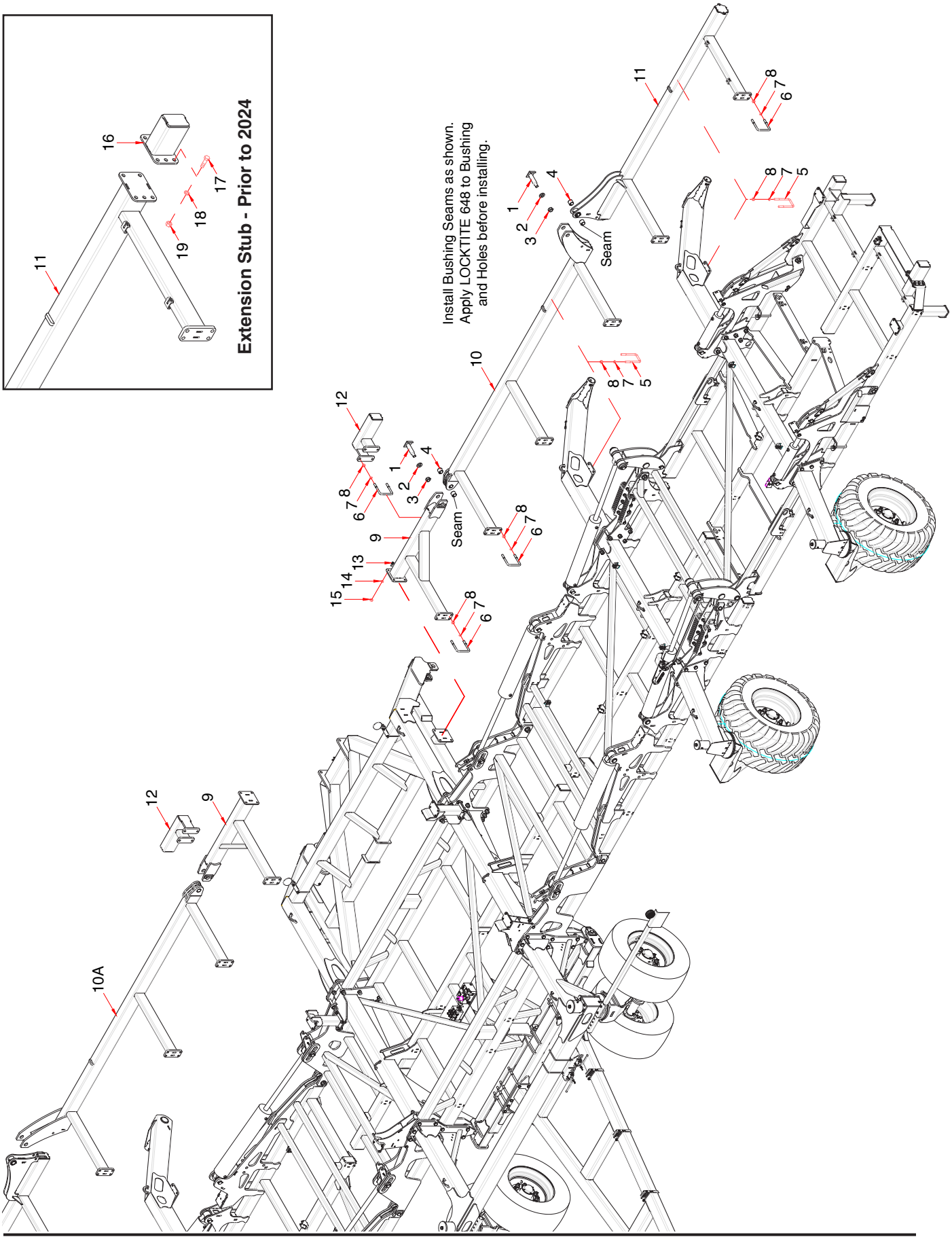

80 ft - 24m - 4th Row

Item	Part No.	Description	Qty
1	S64305	Pin - 1 3/4 x 5 1/2 Lg	4
2	S26462	Washer - 1 1/4 ID x 2 1/2 OD x 3/8 Thick	4
3	S39780	Lock Nut - 1 1/4 Unitorque	4
4	S64325	Bushing - Spring - 1.75 x 2.00 x 1.75 Lg Nominal Size	8
5	C26955	U-Bolt - 3/4 x 4 x 8 UL	12
6	S64958	U-Bolt - 3/4 x 6 1/16 x 6 1/4 UL	24
7	W-527	Lockwasher - 3/4	62
8	W-518	Hex Nut - 3/4	62
9	S72470	Draft Beam - Main	2
10	S65778	Draft Beam - Inner Left	1
10A	S65780	Draft Beam - Inner Right	1
11	S72840	Draft Beam - Outer Left	1
11A	S72835	Draft Beam - Outer Right	1
12	S72842	Extension Stub - 4th Row - 10 inch spacing only	2
13	S-1189	Hex Bolt - 1/2 x 1 3/4 Lg	8
14	W-525	Lockwasher - 1/2	8
15	W-516	Hex Nut - 1/2	8
		4th Row Kit - 80 ft (Includes all above items) Order through Whole Goods	
		Extension Stub - Prior to 2024	
16	S72638	Extension Stub - Flipwing - 10 inch spacing only	2
17	C-695	Hex Bolt - 3/4 x 2 Lg	10
18	W-527	Lockwasher - 3/4	10
19	W-518	Hex Nut - 3/4	10

Wing Lift
40 ft and 50 ft - 12m and 15m

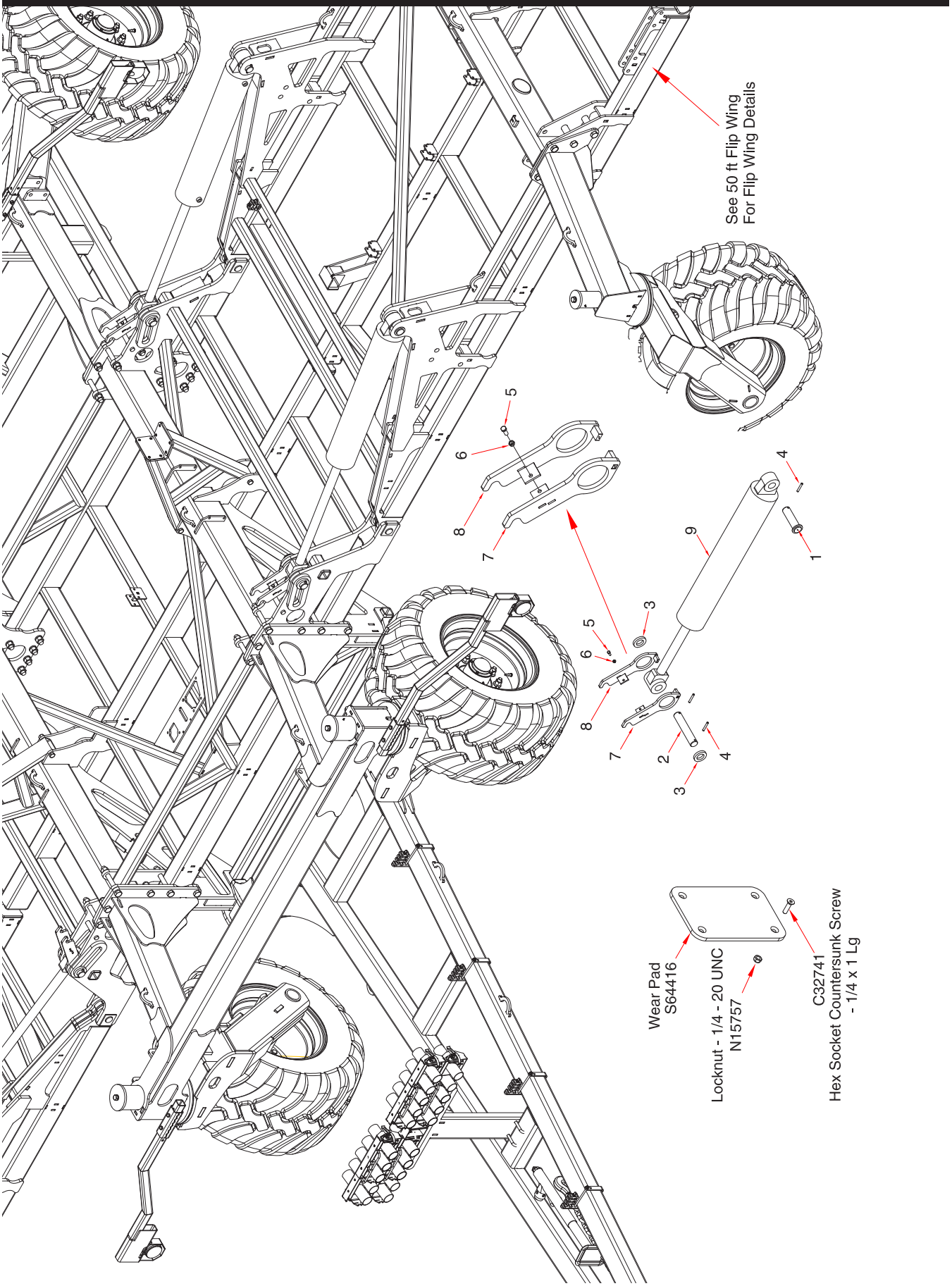

Wing Lift - 40 ft and 50 ft - 12m and 15m

Item	Part No.	Description	Qty
		Quantities given per Wing	
1	S64912	Pin - 1 3/4 x 5 5/8 UL	2
2	S64316	Pin - 1 3/4 x 8 5/8 Hole Centers	2
3	S64327	Washer - 1.781 ID x 3 OD x 1/2 Thick	4
4	T-5245	Spiral Pin - 3/8 x 2 1/2 Lg	6
5	W-475	Hex Bolt - 3/8 x 1 Lg	2
6	M-3388	Locknut - 3/8 Unitorque	2
7	S64905	Wing Cylinder Lock - Left	2
8	S64910	Wing Cylinder Lock - Right	2
9	C64930	Cylinder - 5 x 36	2
	C64920	Cylinder - 6 x 36 - Prior to November 2018	

Wing Lift
60 ft and 70 ft - 18m and 21m - Prior to 2022

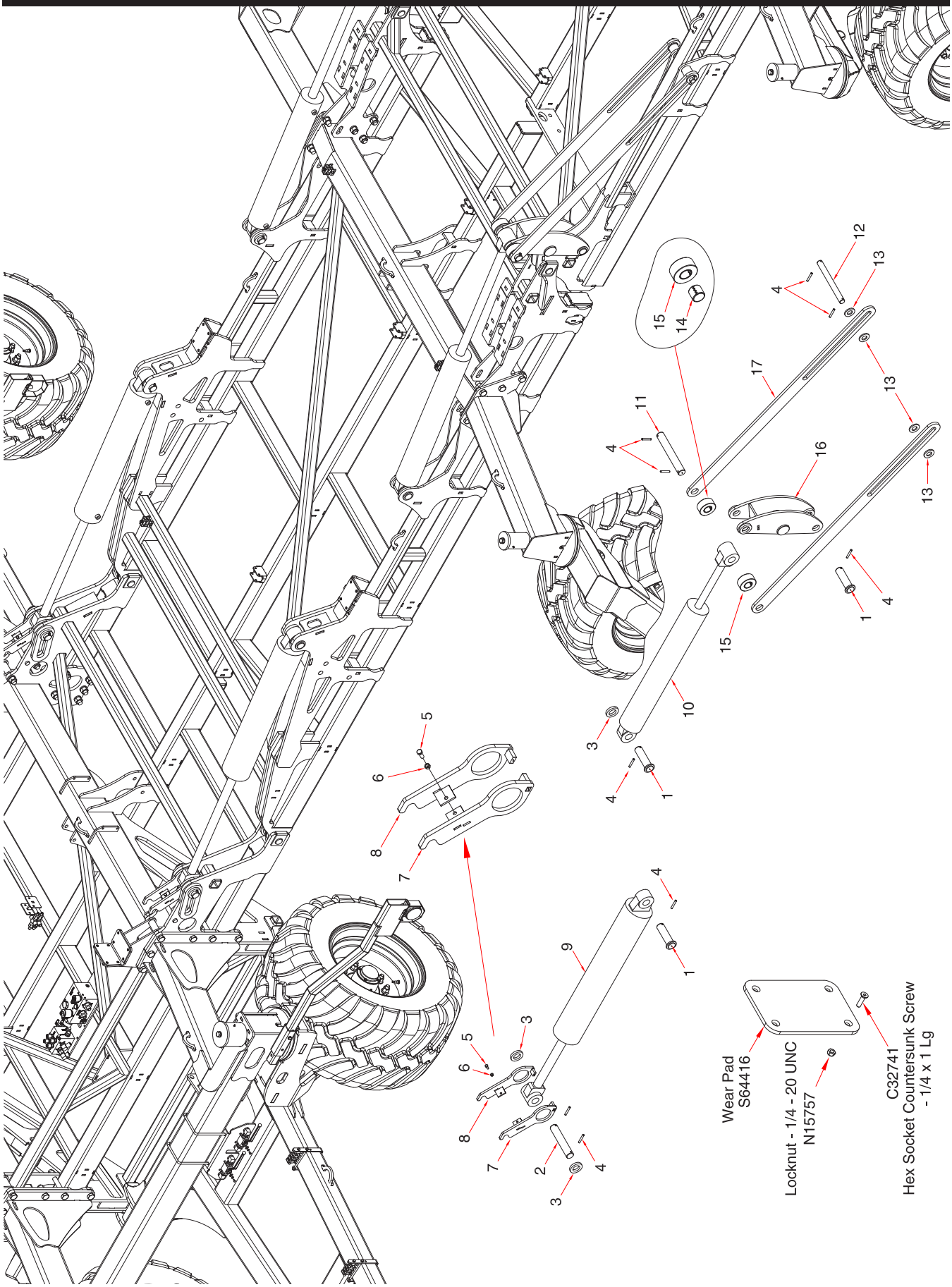

Wing Lift - 60 ft and 70 ft - 18m and 21m - Prior to 2022

Item	Part No.	Description	Qty
		Quantities given per Wing	
1	S64912	Pin - 1 3/4 x 5 5/8 UL	4
2	S64316	Pin - 1 3/4 x 8 5/8 Hole Centers	2
3	S64327	Washer - 1.781 ID x 3 OD x 1/2 Thick	6
4	T-5245	Spiral Pin - 3/8 x 2 1/2 Lg	18
5	W-475	Hex Bolt - 3/8 x 1 Lg	2
6	M-3388	Locknut - 3/8 Unitorque	2
7	S64905	Wing Cylinder Lock - Left	2
8	S64910	Wing Cylinder Lock - Right	2
9	C64920	Cylinder - 6 x 36	2
10	C64930	Cylinder - 5 x 36	2
11	S64918	Pin - 1 3/4 x 11 5/8 Hole Centers	2
12	S64314	Pin - 1 1/4 x 12 1/4 Hole Centers	2
13	N13962	Washer - 1 9/32 ID x 2 1/2 OD x 1/4 Thick	8
14	S64325	Bushing - Spring - 1.75 x 2.00 x 1.75 Lg Nominal Size	4
15	S64909	Roller - 1.746 ID x 4 OD x 1 3/4 Wide (Includes Item 14)	4
16	S64914	Link - Outer Wing (5/8 Side Plates)	2
17	S64959	Strap - Lift - 55 Lg - 60 ft	4
	S64911	Strap - Lift - 65 Lg - 70 ft	4
	S67475	Kit - Wing Rest Spacer Plate (Includes 2 of S67474, and 4 of S67473 and N15757)	

Wing Rest Spacer Plate Kit

Four S67475 Spacer Plate Kits are provided to adjust wear pad height to ensure outer wings rests on pad.

Kit S67475 includes:

- 4 of N15757 Locknut - 1/4 - 20 UNC
- 4 of S67473 Countersunk Screw - 1/4 x 1 3/4 Lg
- 2 of S67474 Spacer Plate - 1/4

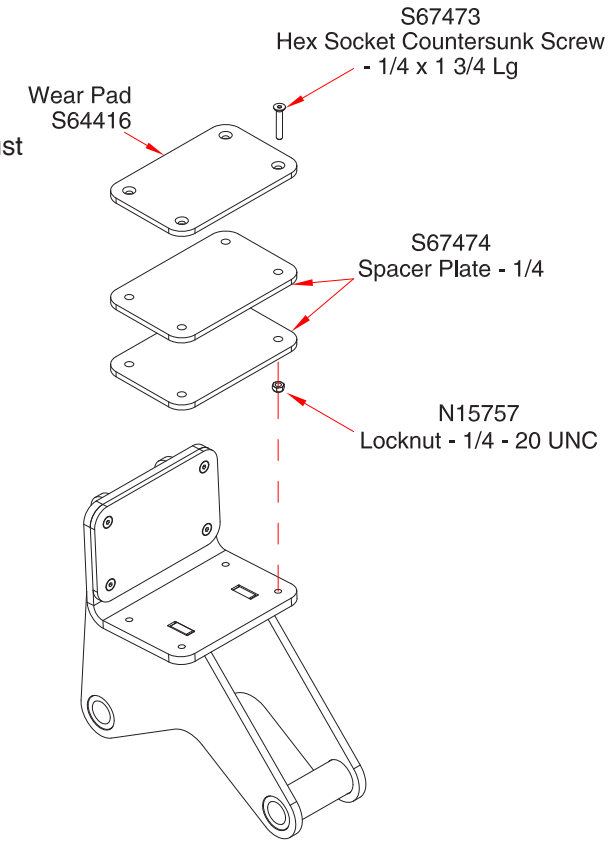

Wing Lift
60 ft and 70 ft - 18m and 21m - 2022 to Present

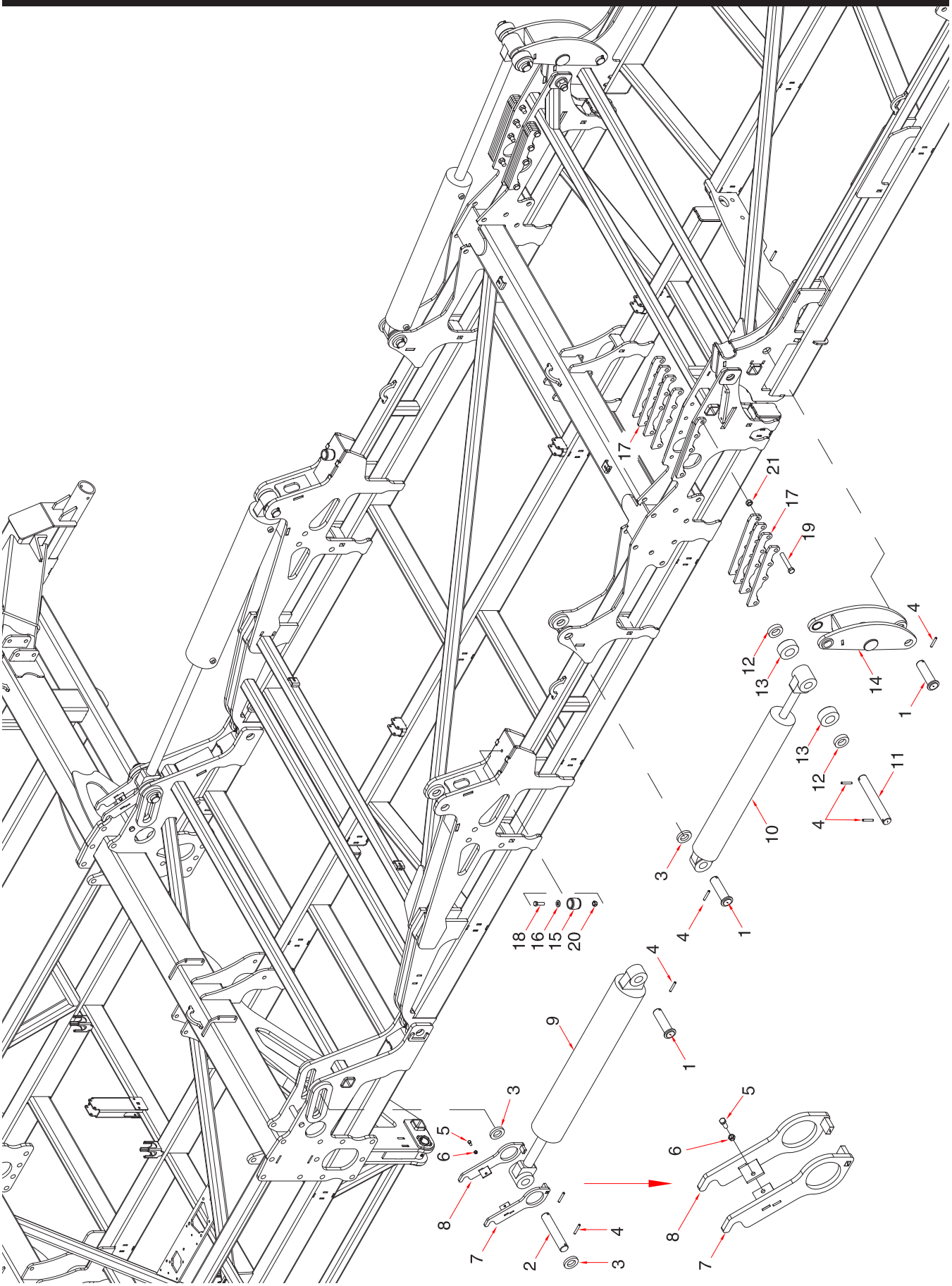

Wing Lift - 60 ft and 70 ft - 18m and 21m - 2022 to Present

Item	Part No.	Description	Qty
		Quantities given per Wing	
1	S64912	Pin - 1 3/4 x 5 5/8 UL	4
2	S64316	Pin - 1 3/4 x 8 5/8 Hole Centers	2
3	S64327	Washer - 1.781 ID x 3 OD x 1/2 Thick	6
4	T-5245	Spiral Pin - 3/8 x 2 1/2 Lg	14
5	W-475	Hex Bolt - 3/8 x 1 Lg	2
6	M-3388	Locknut - 3/8 Unitorque	2
7	S64905	Wing Cylinder Lock - Left	2
8	S64910	Wing Cylinder Lock - Right	2
9	C64920	Cylinder - 6 x 36	2
10	C64930	Cylinder - 5 x 36	2
11	S64918	Pin - 1 3/4 x 11 5/8 Hole Centers	2
12	S69118	Washer - 1 25/32 ID x 3 OD x 3/4 Thick	4
13	S69047	Roller - Nylon - 1.758 ID x 4 OD x 1 3/4 Wide	4
14	S68999	Link - Outer Wing (3/4 Side Plates)	2
15	11678	Bump Stop	2
16	S-1925	Washer - 17/32 ID x 1 OD x 13 GA	2
17	S71923	Support - Wing Lift Roller	16
18	W-486	Bolt - 1/2 x 1 1/2 Lg	2
19	S-1175	Bolt - 3/4 x 4 1/2 Lg	16
20	F-3405	Locknut - 1/2 Unitorque	2
21	D-5273	Locknut - 3/4 Unitorque	16
	S67475	Kit - Wing Rest Spacer Plate (Includes 2 of S67474, and 4 of S67473 and N15757)	

Wing Rest Spacer Plate Kit

Four S67475 Spacer Plate Kits are provided to adjust wear pad height to ensure outer wings rests on pad.

Kit S67475 includes:

- 4 of N15757 Locknut - 1/4 - 20 UNC
- 4 of S67473 Countersunk Screw - 1/4 x 1 3/4 Lg
- 2 of S67474 Spacer Plate - 1/4

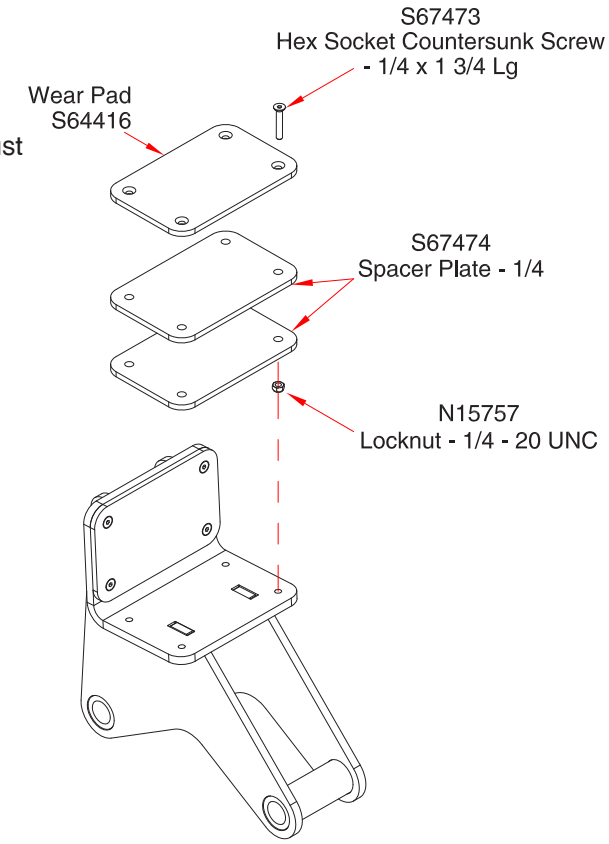

Wing Lift
80 ft - 24m

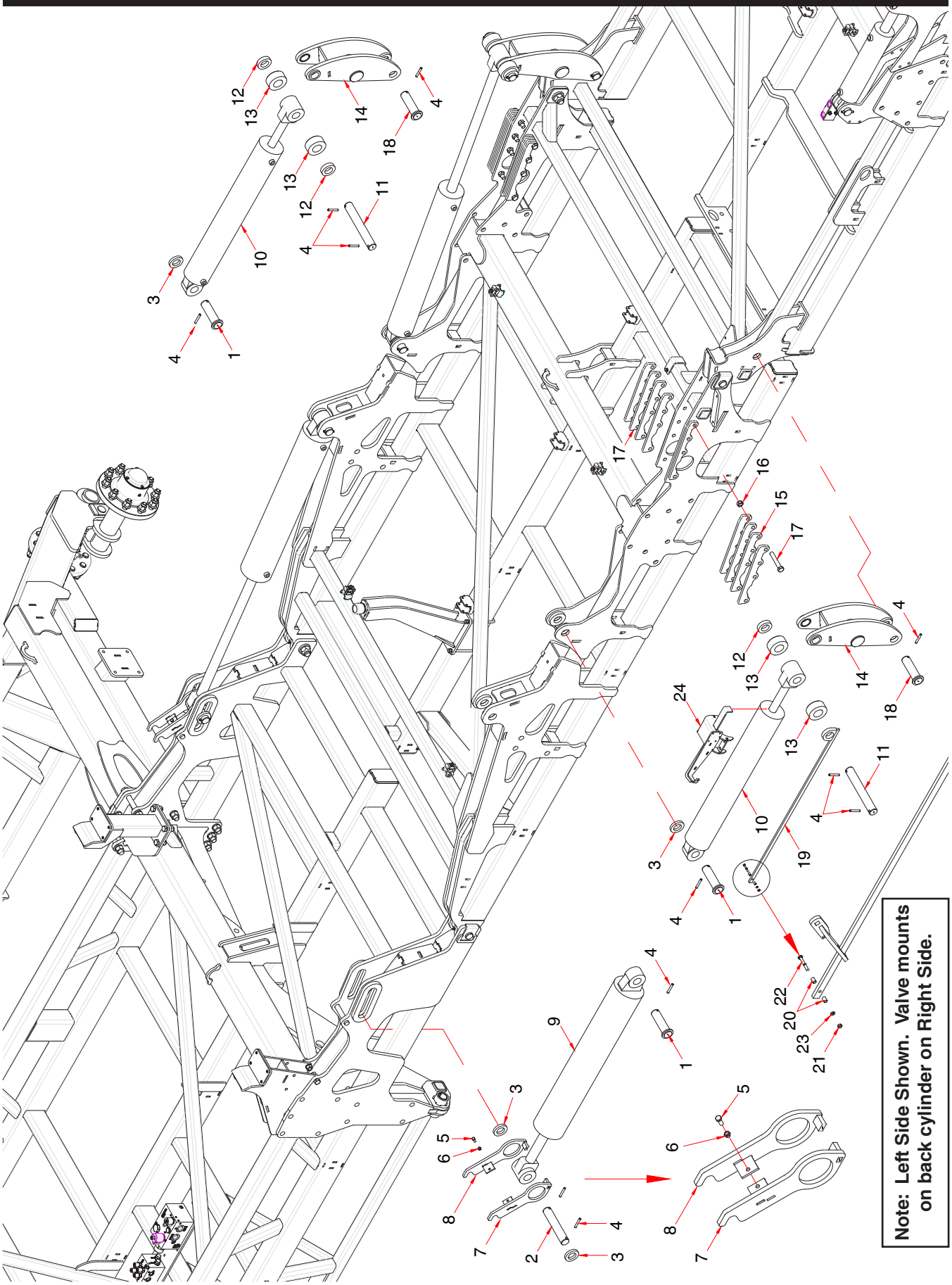

Wing Lift - 80 ft - 24m

Item	Part No.	Description	Qty
		Quantities given per Wing	
1	S64912	Pin - 1 3/4 x 5 5/8 UL	4
2	S64316	Pin - 1 3/4 x 8 5/8 Hole Centers	2
3	S64327	Washer - 1.781 ID x 3 OD x 1/2 Thick	6
4	T-5245	Spiral Pin - 3/8 x 2 1/2 Lg	14
5	W-475	Hex Bolt - 3/8 x 1 Lg	2
6	M-3388	Locknut - 3/8 Unitorque	2
7	S64905	Wing Cylinder Lock - Left	2
8	S64910	Wing Cylinder Lock - Right	2
9	C64920	Cylinder - 6 x 36	2
10	C64930	Cylinder - 5 x 36	2
11	S64918	Pin - 1 3/4 x 11 5/8 Hole Centers	2
12	S69118	Washer - 1 25/32 ID x 3 OD x 3/4 Thick	4
13	S69047	Roller - Nylon - 1.758 ID x 4 OD x 1 3/4 Wide	4
14	S72772	Link - Outer Wing (3/4 Side Plates)	2
15	S71923	Support - Wing Lift Roller	16
16	D-5273	Locknut - 3/4 Unitorque	16
17	S-1175	Bolt - 3/4 x 4 1/2 Lg	16
18	S73108	Pin - 1 3/4 x 6 1/8 UL	2
19	S72735	Actuator Rod - 44 7/8 Lg .. (42 3/8 C-C Distance)	1
20	S72946	Spacer - 0.277 ID x 3/8 OD x 1/2 Lg	2
21	N22778	Lock Nut - 1/4 Nylon Insert	1
22	C-1471	Hex Bolt - 1/4 x 1 3/4 Lg	1
23	W-521	Lockwasher - 1/4	1
24	* * * * *	Valve Assembly - See Hydraulic Section for details	1

Lighting and Marking
40 ft to 70 ft - 12m to 21m on 9 Series Cart

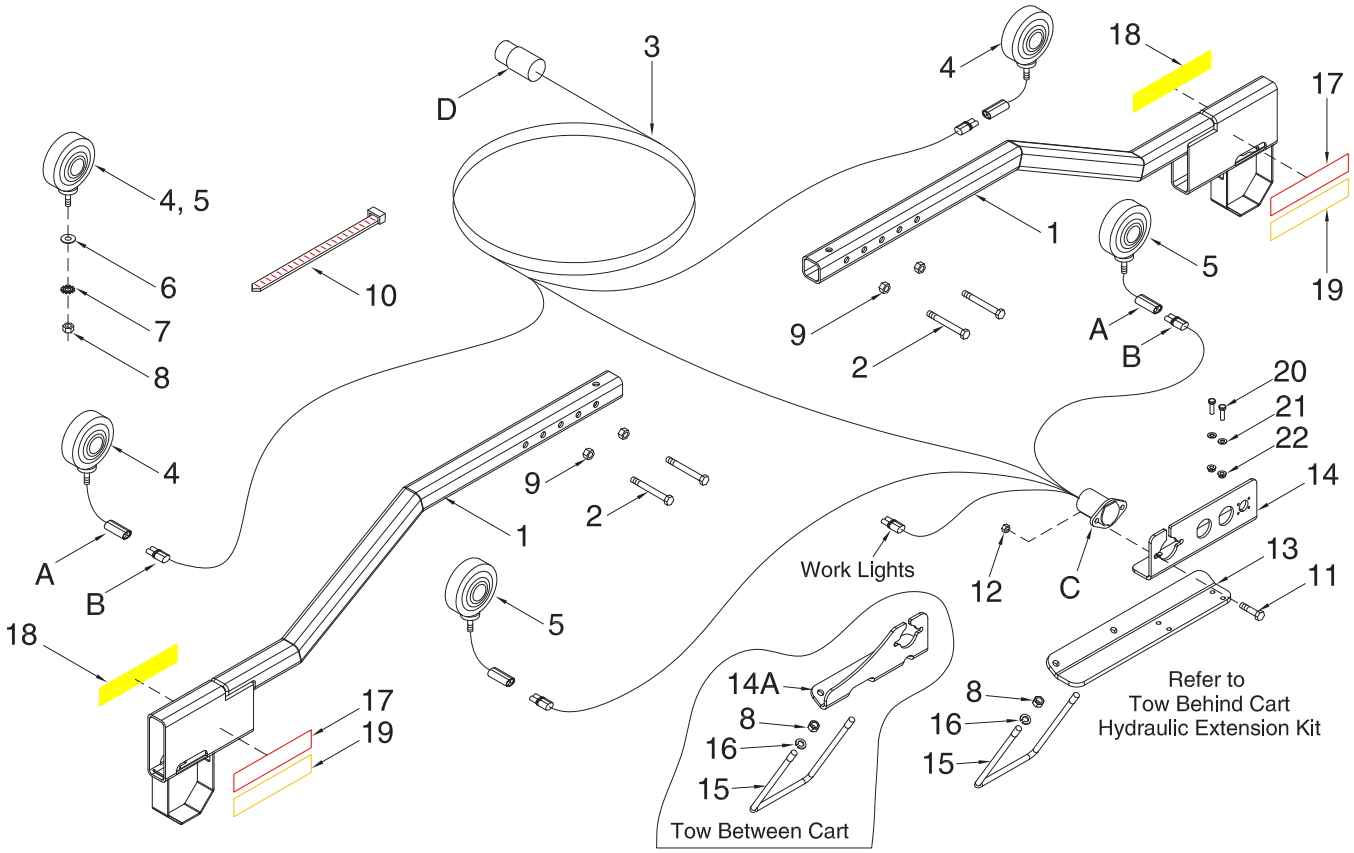

Item	Part No.	Description	Qty
1	S64900	Tube - Mounting - Main - Lighting	4
2	D-5519	Hex Bolt - 1/2 x 3 1/4	8
3	S65799	Wiring Harness - Safety Lights	1
4	N50365	Light LED - Amber	2
5	N50366	Light LED - Red	2
6	W-539	Flatwasher - 1/2	4
7	D-5280	Starwasher - 1/2	4
8	W-516	Hex Nut - 1/2	4
9	F-3405	Locknut - 1/2 Unitorque	8
10	D-4951	Nylon Tie Strap - 7 3/8 lg	20
	S13336	Nylon Tie Strap - 28 1/4 lg	10
11	N29048	Hex Head Bolt - 5/16 x 1 lg	2
12	D-5278	Serrated Nut - 5/16	2
13	S65673	Bracket - Mounting - Tow Behind	1
14	N64747	Bracket - Electrical Connector - Tow Behind	1
14A	**N67500**	**Bracket - Electrical Connector - Tow Between**	**1**
15	H25628	U-Bolt - 1/2 x 6 1/16 x 9 3/8 UL - 40 ft - 70 ft	1
16	W-525	Lockwasher - 1/2	2
17	N34476	Reflector - Red	2
18	N34477	Reflector - Amber	2
19	N34478	Reflector - Orange	2
20	W-472	Hex Bolt - 5/16 x 1 1/4 Lg - Tow Behind	2
21	D-5488	Washer - 11/32 ID x 11/16 OD x 16 GA - Tow Behind	6
22	D-5278	Lock Nut - 5/16 Flange - Tow Behind	2

Lighting and Marking
40 ft to 70 ft - 12m to 21m on 10 Series Cart

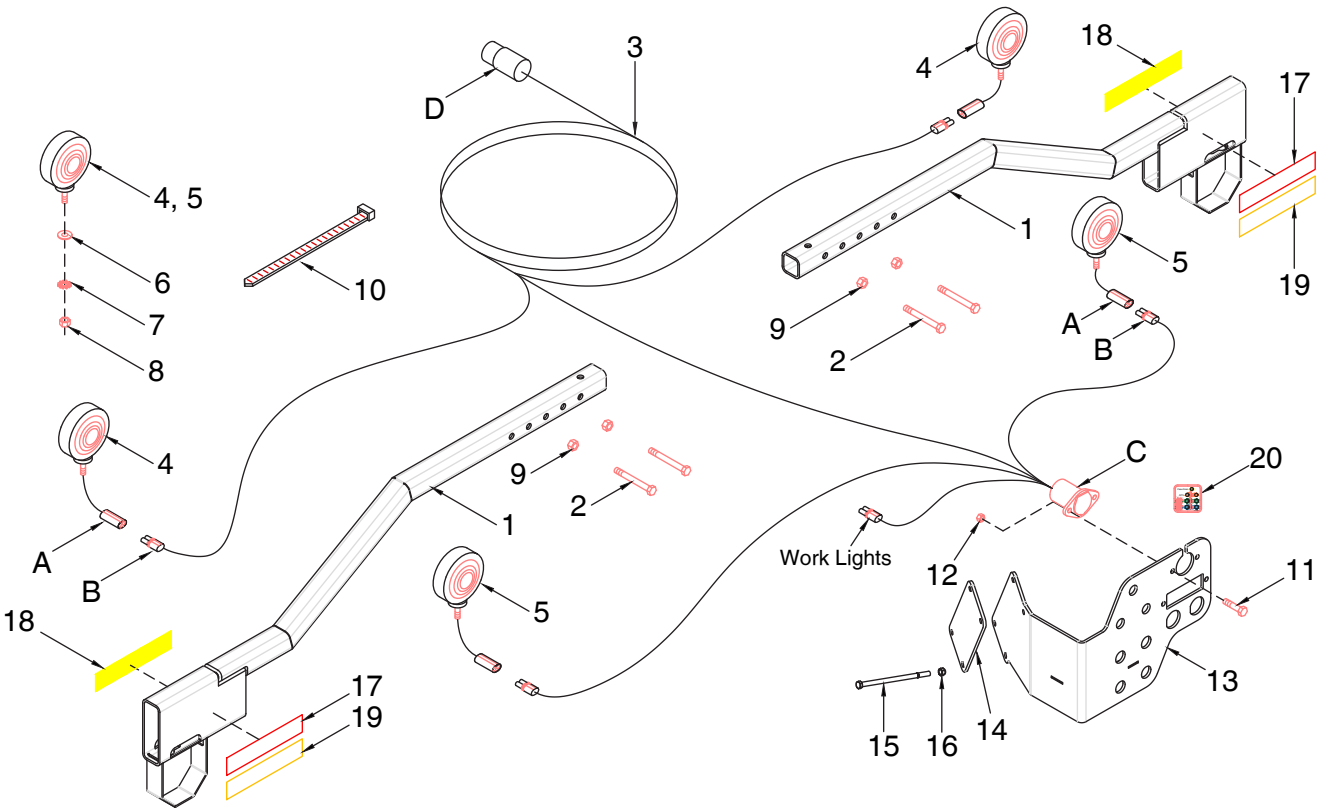

Item	Part No.	Description	Qty
1	S64900	Tube - Mounting - Main - Lighting	4
2	D-5519	Hex Bolt - 1/2 x 3 1/4	8
3	S65799	Wiring Harness - Safety Lights	1
4	N50365	Light LED - Amber	2
5	N50366	Light LED - Red	2
6	W-539	Flatwasher - 1/2	4
7	D-5280	Starwasher - 1/2	4
8	W-516	Hex Nut - 1/2	4
9	F-3405	Locknut - 1/2 Unitorque	8
10	D-4951	Nylon Tie Strap - 7 3/8 lg	20
	S13336	Nylon Tie Strap - 28 1/4 lg	10
11	N29048	Hex Head Bolt - 5/16 x 1 lg	2
12	D-5278	Serrated Nut - 5/16	2
13	S73724	Bracket - Bulk Head - Quantum 40 ft to 70 ft	1
14	S73732	Clamp Plate - Bulk Head - Quantum 40 ft to 70 ft	1
15	N19678	Hex Bolt - 3/8 x 7 Lg	4
16	M-3388	Locknut - 3/8	4
17	N34476	Reflector - Red	2
18	N34477	Reflector - Amber	2
19	N34478	Reflector - Orange	2
20	N74998	Decal - Hose Identification - Bulkhead (Locate on Bulkhead)	1

Lighting and Marking
80 ft - 24m on 9 Series Cart

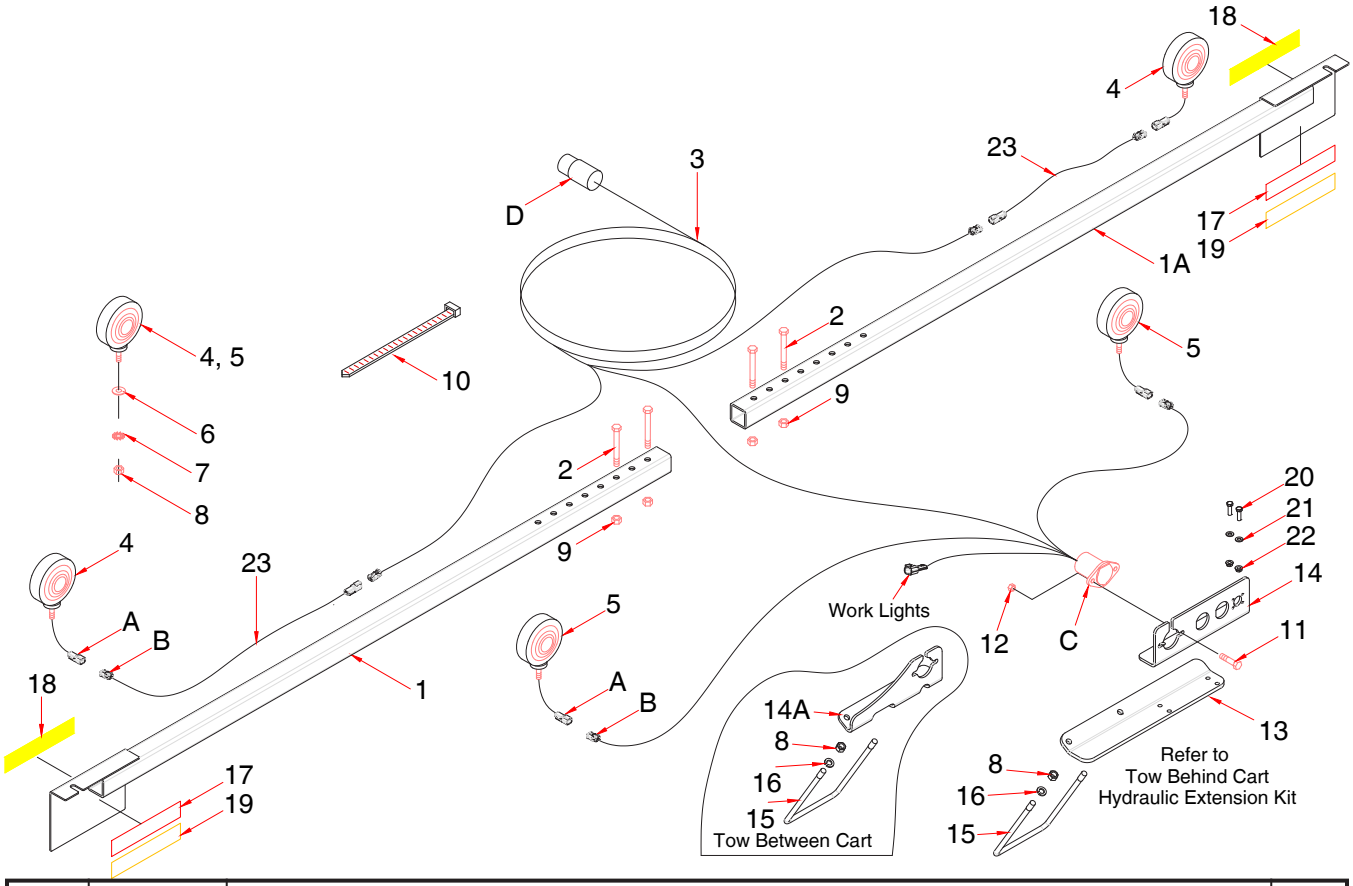

Item	Part No.	Description	Qty
1	S72700	Light Bracket - Left	1
1A	S73110	Light Bracket - Right	1
2	D-5519	Hex Bolt - 1/2 x 3 1/4	8
3	S65799	Wiring Harness - Safety Lights	1
4	N50365	Light LED - Amber	2
5	N50366	Light LED - Red	2
6	W-539	Flatwasher - 1/2	4
7	D-5280	Starwasher - 1/2	4
8	W-516	Hex Nut - 1/2	4
9	F-3405	Locknut - 1/2 Unitorque	8
10	D-4951	Nylon Tie Strap - 7 3/8 lg	20
	S13336	Nylon Tie Strap - 28 1/4 lg	10
11	N29048	Hex Head Bolt - 5/16 x 1 lg	2
12	D-5278	Serrated Nut - 5/16	2
13	S65673	Bracket - Mounting - Tow Behind	1
14	N64747	Bracket - Electrical Connector - Tow Behind	1
14A	**N67500**	**Bracket - Electrical Connector - Tow Between**	**1**
15	S73828	U-Bolt - 1/2 x 6 1/16 x 7 3/8 UL - 80 ft	1
16	W-525	Lockwasher - 1/2	2
17	N34476	Reflector - Red	2
18	N34477	Reflector - Amber	2
19	N34478	Reflector - Orange	2
20	W-472	Hex Bolt - 5/16 x 1 1/4 Lg - Tow Behind	2
21	D-5488	Washer - 11/32 ID x 11/16 OD x 16 GA - Tow Behind	6
22	D-5278	Lock Nut - 5/16 Flange - Tow Behind	2
23	C31439	Wiring Extension - 2 Pin - 10 ft	2

Lighting and Marking
80 ft - 24m on 10 Series Cart

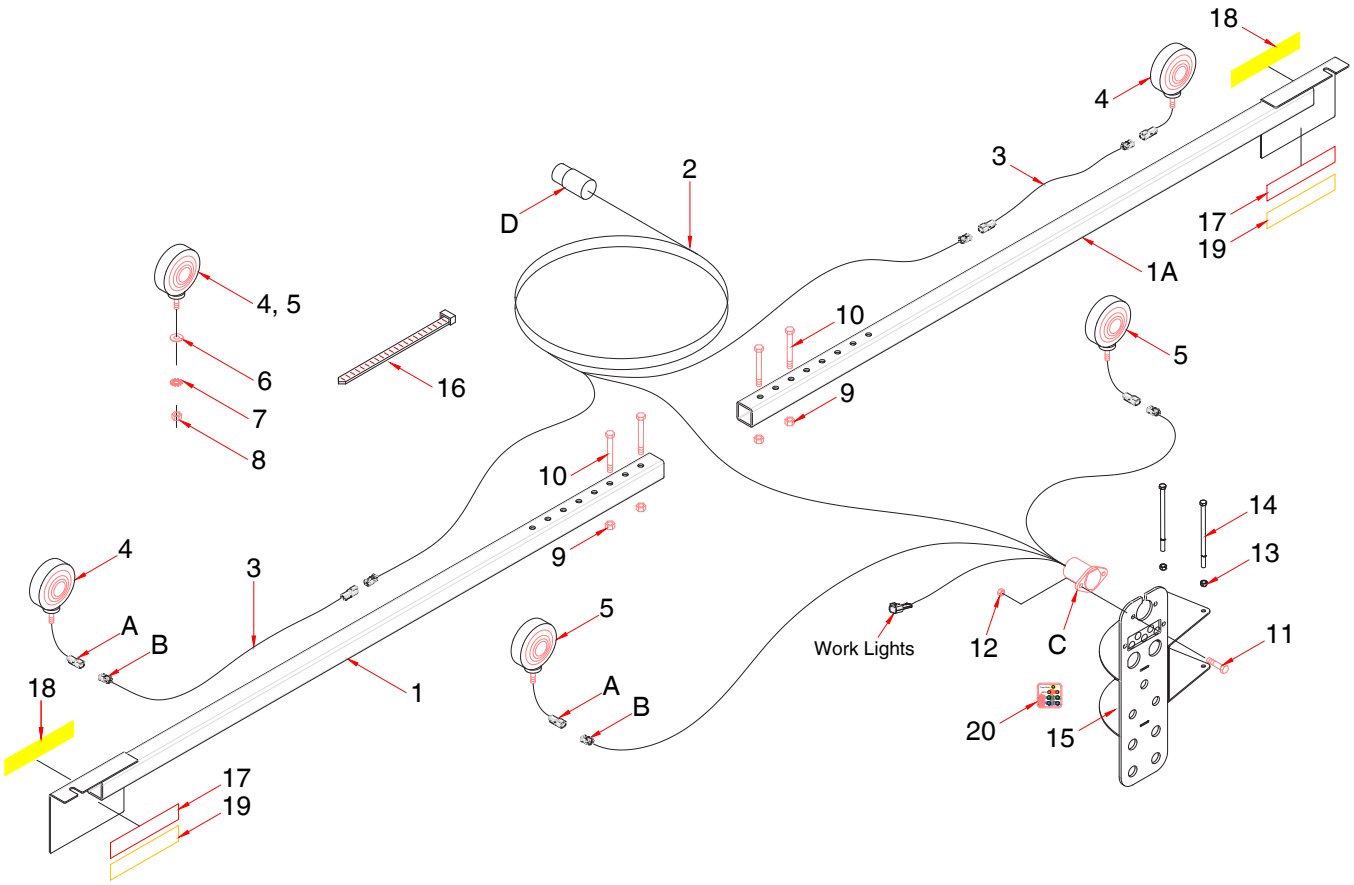

Item	Part No.	Description	Qty
1	S72700	Light Bracket - Left	1
1A	S73110	Light Bracket - Right	1
2	S65799	Wiring Harness - Safety Lights	1
3	C31439	Wiring Extension - 2 Pin - 10 ft	2
4	N50365	Light LED - Amber	2
5	N50366	Light LED - Red	2
6	W-539	Flatwasher - 1/2	4
7	D-5280	Starwasher - 1/2	4
8	W-516	Hex Nut - 1/2	4
9	F-3405	Locknut - 1/2 Unitorque	8
10	D-5519	Hex Bolt - 1/2 x 3 1/4	8
11	N29048	Hex Head Bolt - 5/16 x 1 lg	2
12	D-5278	Serrated Nut - 5/16	2
13	M-3388	Locknut - 3/8 Nylon Insert	2
14	N19678	Hex Head Bolt - 3/8 x 7 Lg	2
15	S69855	Bracket - Bulk Head - Quantum 80 ft Only	1
16	D-4951	Nylon Tie Strap - 7 3/8 lg	20
	S13336	Nylon Tie Strap - 28 1/4 lg	10
17	N34476	Reflector - Red	2
18	N34477	Reflector - Amber	2
19	N34478	Reflector - Orange	2
20	N74998	Decal - Hose Identification - Bulkhead (Locate on Bulkhead)	1

Clevis Options

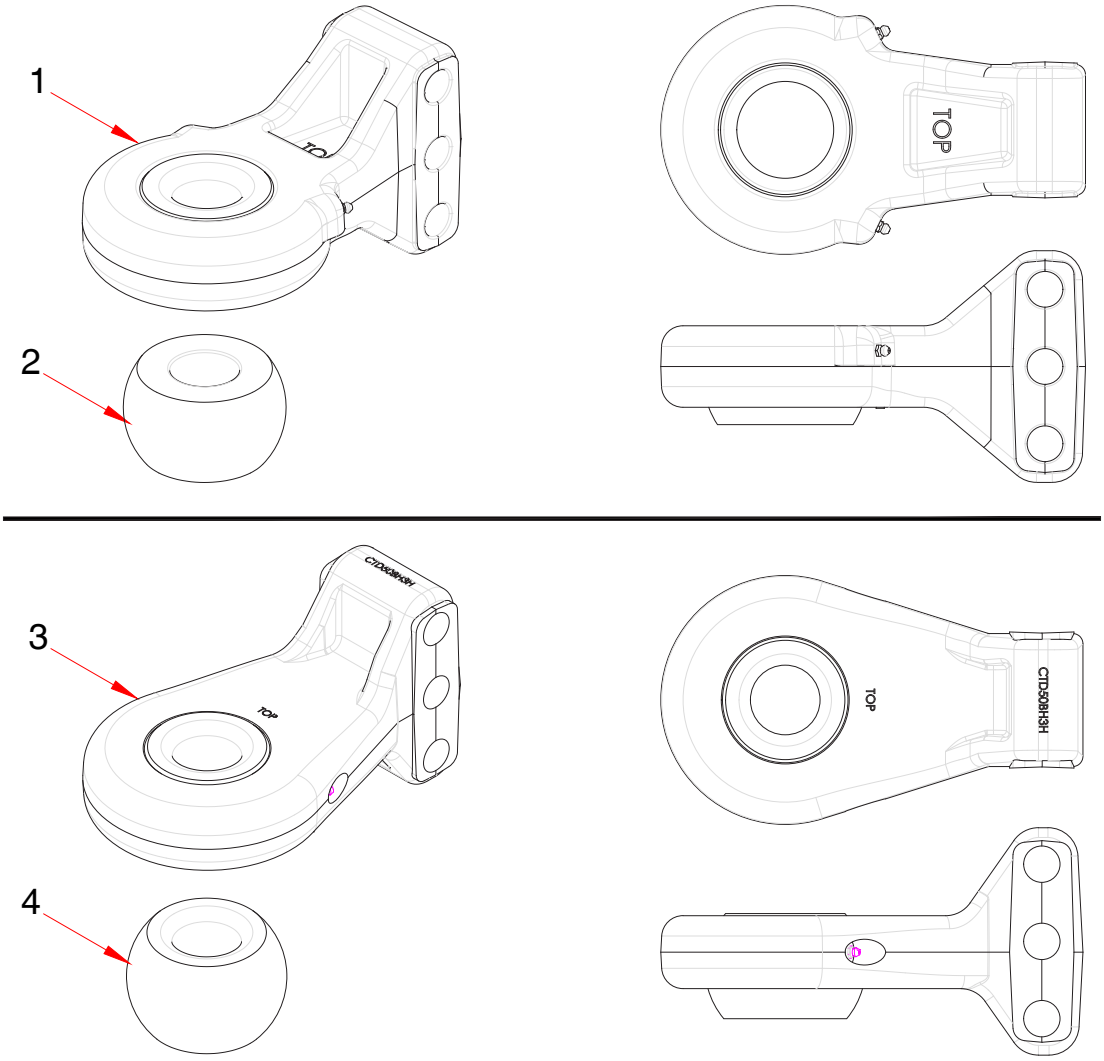

Item	Part No.	Description	Qty
		Confirm Clevis Style before selecting Clevis Insert replacement	
		Old prior to 2027	
1	S64300	Clevis - CAT 5 (2 Diameter Draw Pin) (Includes item 2).....	1
1A	S64310	Clevis - CAT 5 (2 3/4 Diameter Draw Pin) (Includes item 2A)	
1B	S66236	Clevis - CAT 4 (1 1/2 Pin Diameter Draw Pin) (Includes item 2B) Tow Between Cart	
1C	K62145	Clevis - CAT 4 (2 Pin Diameter Draw Pin) (Includes item 2C) Tow Between Cart	
2	S65738	Clevis Insert - CAT 5 - (2 Diameter Draw Pin)	
2A	S65742	Clevis Insert - CAT 5 - (2 3/4 Diameter Draw Pin)	
2B	S65740	Clevis Insert - CAT 4 - (1 1/2 Diameter Draw Pin)	
2C	S67388	Clevis Insert - CAT 4 - (2 Diameter Draw Pin)	
		New for 2027	
3	S76847	Clevis - CAT 5 - CTD (2 Diameter Draw Pin) (Includes item 4).....	1
3A	S76848	Clevis - CAT 5 - CTD (2 3/4 Diameter Draw Pin) (Includes item 4A)	
3B	S76845	Clevis - CAT 4 - CTD (1 1/2 Pin Diameter Draw Pin) (Includes item 4B) Tow Between Cart	
3C	S76846	Clevis - CAT 4 - CTD (2 Pin Diameter Draw Pin) (Includes item 4C) Tow Between Cart	
4	S76837	Clevis Insert - CTD - CAT 5 - (2 Diameter Draw Pin)	
4A	S76838	Clevis Insert - CTD - CAT 5 - (2 3/4 Diameter Draw Pin)	
4B	S76835	Clevis Insert - CTD - CAT 4 - (1 1/2 Diameter Draw Pin)	
4C	S76836	Clevis Insert - CTD - CAT 4 - (2 Diameter Draw Pin)	

Section 2: Wheels

Section Contents

40 ft to 70 ft Wheel Assembly - Main Frame 2-2
80 ft Wheel Assembly - Main Frame 2-3
40 ft to 80 ft Wheel Assembly - Wing Frame 2-4
Hub and Spindle Assembly - S64970 2-5
Hub and Spindle Assembly - S72080 2-6
Hub and Spindle Assembly - N70874 2-7

40 ft to 70 ft Wheel Assembly - Main Frame

Wheel usage by year:

K65090 and K65091 - 2018 to 2020

S64960 - 70 ft model only 2021 to 2022

S68660 - 40 to 60 ft 2021 to present

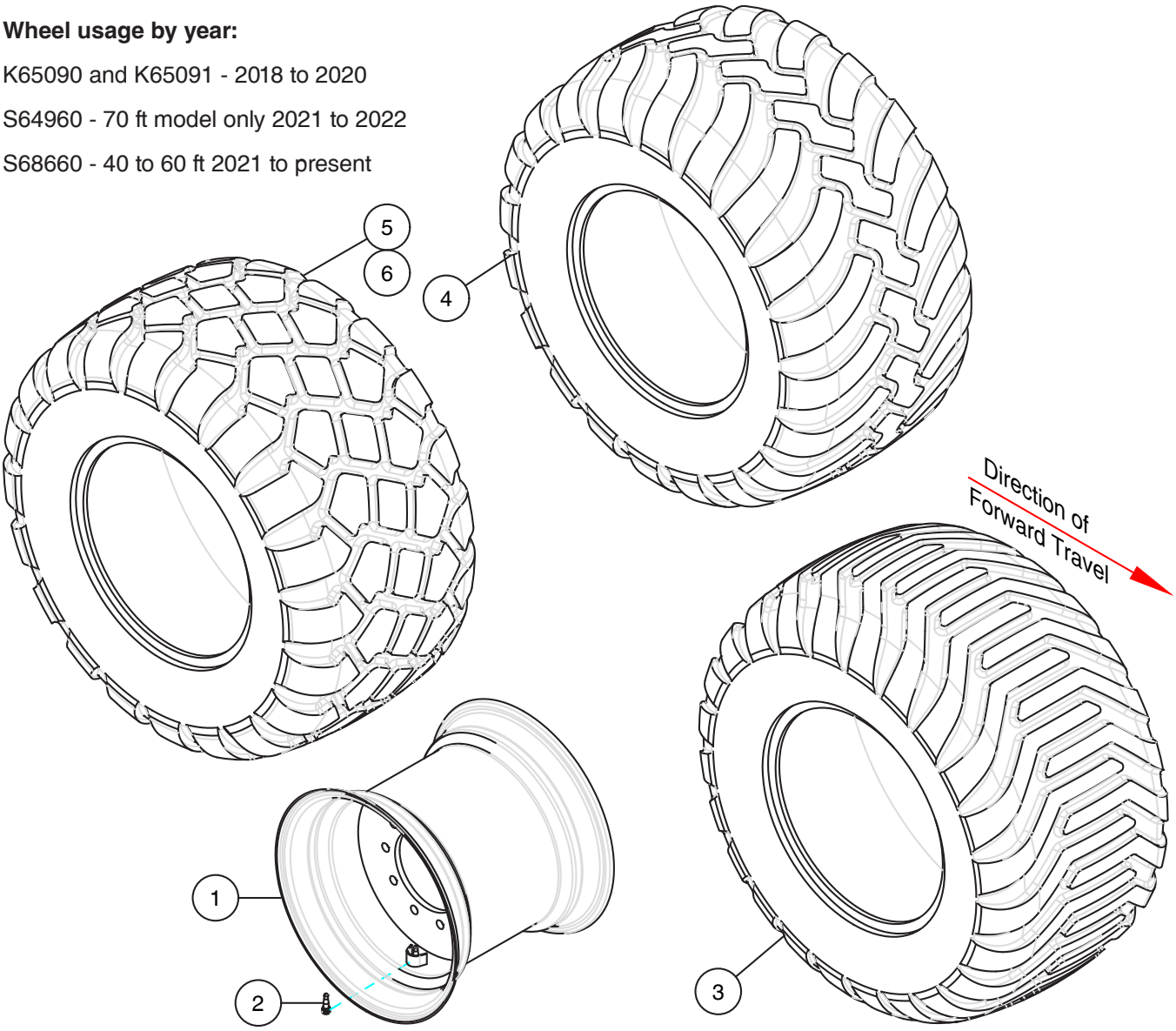

Note: Left Tire and Rim Assembly Shown use on right side of machine

Item	Part No.	Description	Qty
1	S64947	Rim - 20 x 22.5 - 10 Bolt	1
2	N13968	Valve Stem - TR618A	1
3	**K56777**	**Tire - 600/5022.5 - Bias Ply (TVS EUROGRIP)**	**1**
4	S64949	Tire - 600/50R22.5 - By-Directional (ALLIANCE 380)	1
5	**S68655**	**Tire - 600/50R22.5 - By-Directional (MAXAM FLOTXTRA - HD FLOTATION)**	**1**
	K65090	Tire Rim Assembly-**Left** (Shown above)(Includes items 1, 2 and 3)use on right side of machine	
	K65091	Tire Rim Assembly-**Right** (Not Shown) (Includes items 1, 2 and 3)use on right side of machine	
	S64960	Tire and Rim Assembly - **By-Directional** (Includes items 1, 2 and 4)	
	S68660	**Tire and Rim Assembly - By-Directional (Includes items 1, 2 and 5)**	

80 ft Wheel Assembly - Main Frame

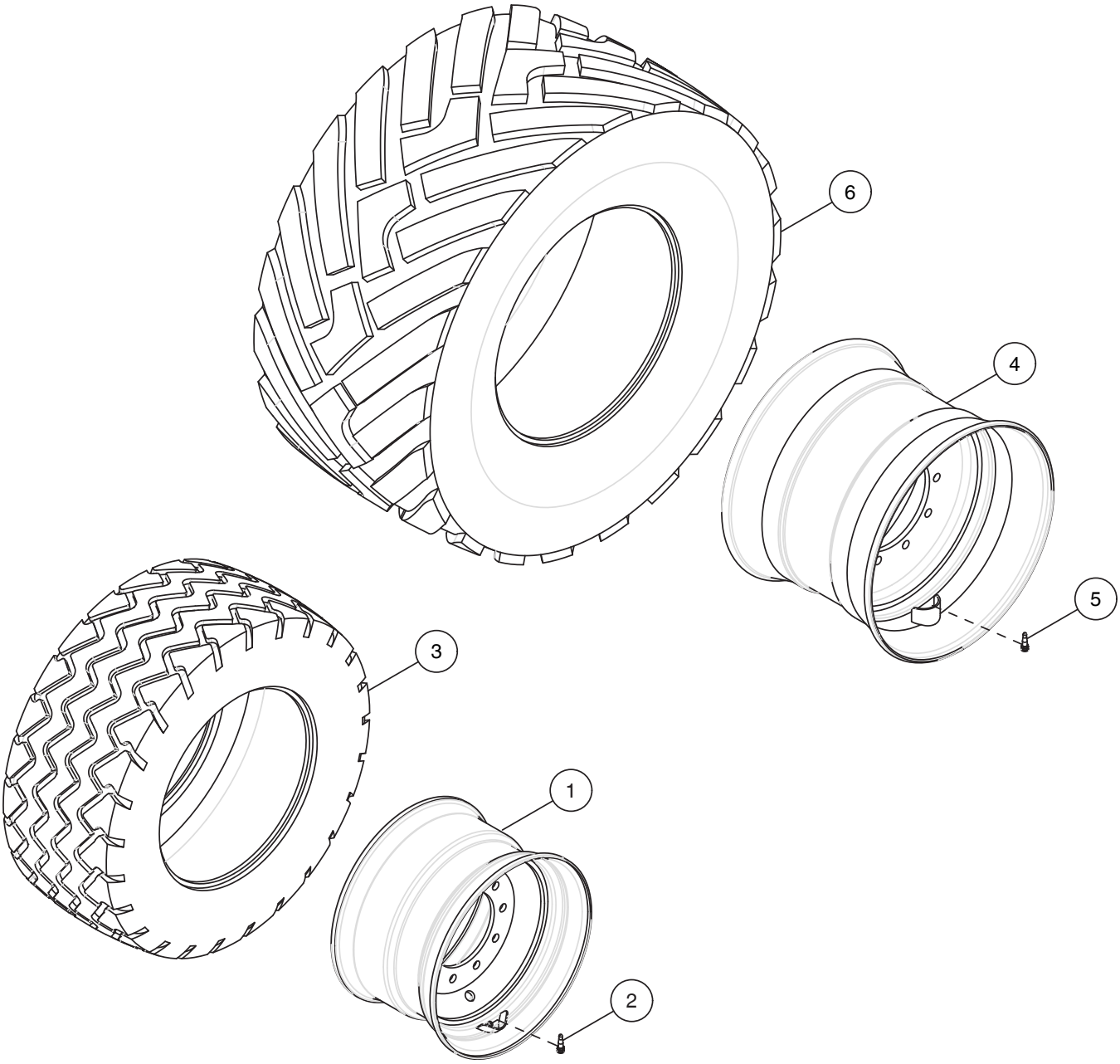

Item	Part No.	Description	Qty
		Front Tire Assembly	
1	S72827	Rim - 14 x 22.5 - 10 Bolt	1
2	N13968	Valve Stem - TR618A	1
3	S72826	Tire - Alliance 381 - 445/50R22.5 VF	1
	S72825	Tire and Rim Assembly (Includes items 1 to 3)	
		Rear Tire Assembly - 2024 to Present	
4	S73367	Rim - 20 x 26.5 - 10 Bolt	1
5	N13968	Valve Stem - TR618A	1
6	S73368	Tire - Alliance 885 - 650/55R26.5 - Directional Tread	1
	S73369	Tire and Rim Assembly - Alliance 885 - 650/55R26.5 - Right (Includes items 4 to 6)	1
	S73371	Tire and Rim Assembly - Alliance 885 - 650/55R26.5 - Left (Includes items 4 to 6)	1

40 ft to 80 ft Wheel Assembly - Wing Frame

Wheel usage by year:

K65090 and K65091 - 2018 to 2020

S64960 - 70 ft model only 2021 to 2022

S68660 - 40 to 60 ft 2021 to present

S76950 - 40 to 80 ft - **Option** 2027 to present

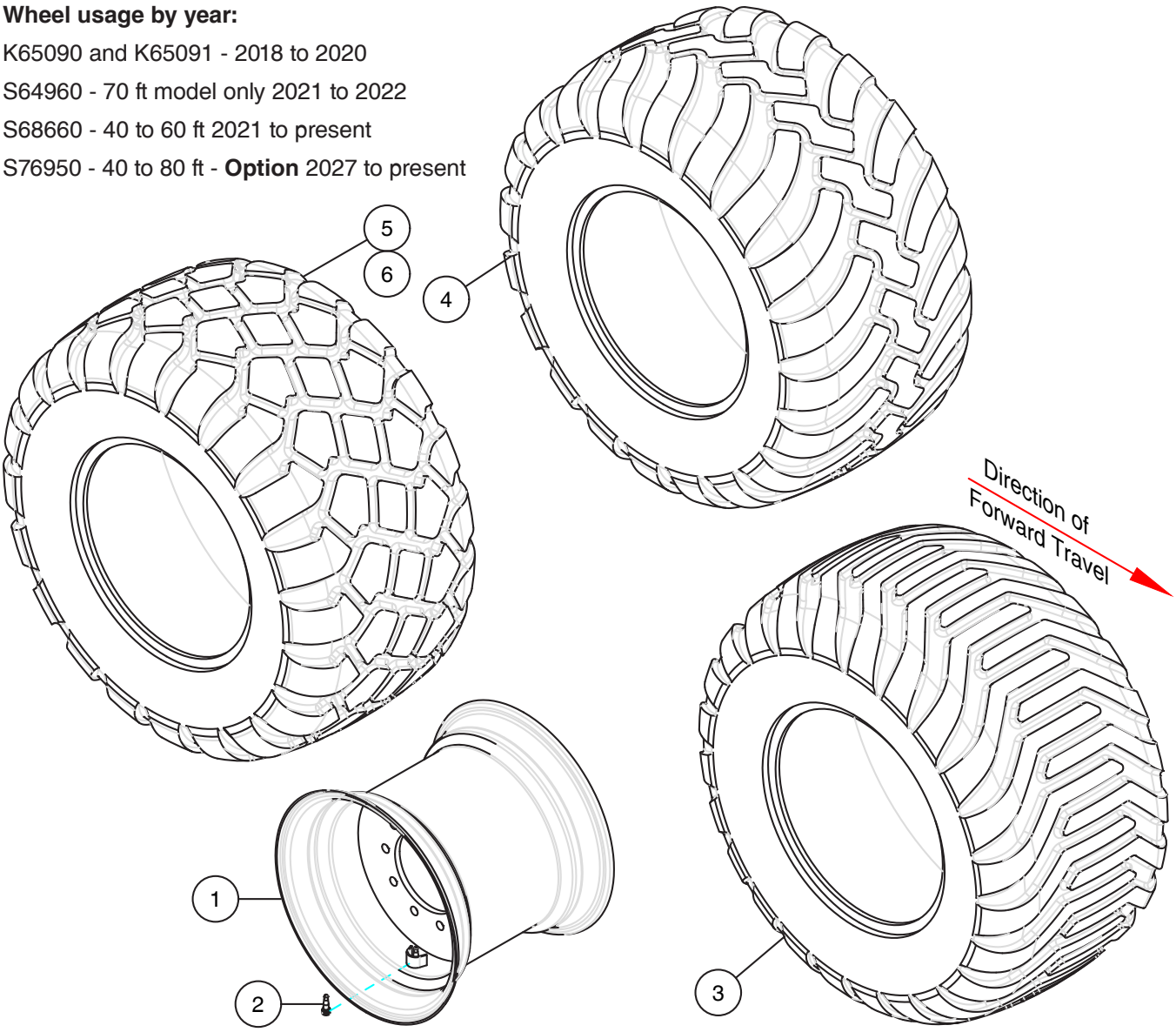

Note: Left Tire and Rim Assembly Shown use on right side of machine

Item	Part No.	Description	Qty
1	S64947	Rim - 20 x 22.5 - 10 Bolt - Fits tires 3, 4 and 5	1
1A	S76951	Rim - 16 x 22.5 - 10 Bolt - Fits tire 6	1
2	N13968	Valve Stem - TR618A	1
3	**K56777**	**Tire - 600/5022.5 - Bias Ply (TVS EUROGRIP)**	**1**
4	S64949	Tire - 600/50R22.5 - By-Directional (ALLIANCE 380)	1
5	**S68655**	**Tire - 600/50R22.5 - By-Directional (MAXAM FLOTXTRA - HD FLOTATION)**	**1**
6	S76952	Tire - 500/60R22.5 - By-Directional (MAXAM FLOTXTRA - HD FLOTATION) - **Option**	1
	K65090	Tire Rim Assembly-**Left** (Shown above)(Includes items 1, 2 and 3)use on right side of machine	
	K65091	Tire Rim Assembly-**Right** (Not Shown) (Includes items 1, 2 and 3)use on right side of machine	
	S64960	Tire and Rim Assembly - **By-Directional** (Includes items 1, 2 and 4)	
	S68660	**Tire and Rim Assembly - By-Directional (Includes items 1, 2 and 5)**	
	S76950	Tire and Rim Assembly - By-Directional (Includes items 1A, 2 and 6) - **Option**	

Hub and Spindle Assembly - S64970

Original Hub and Spindle with 3.375 diameter raised seal area. Supplied on units prior to Serial Numbers:
40 Quantum serial # QT40210486
50 Quantum serial # QT50210561
60 Quantum serial # QT60210745
70 Quantum serial # QT70210794

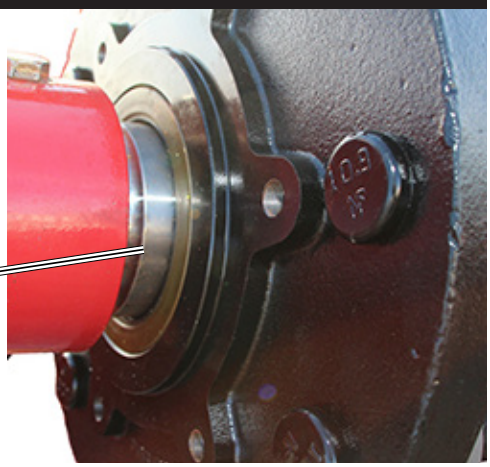

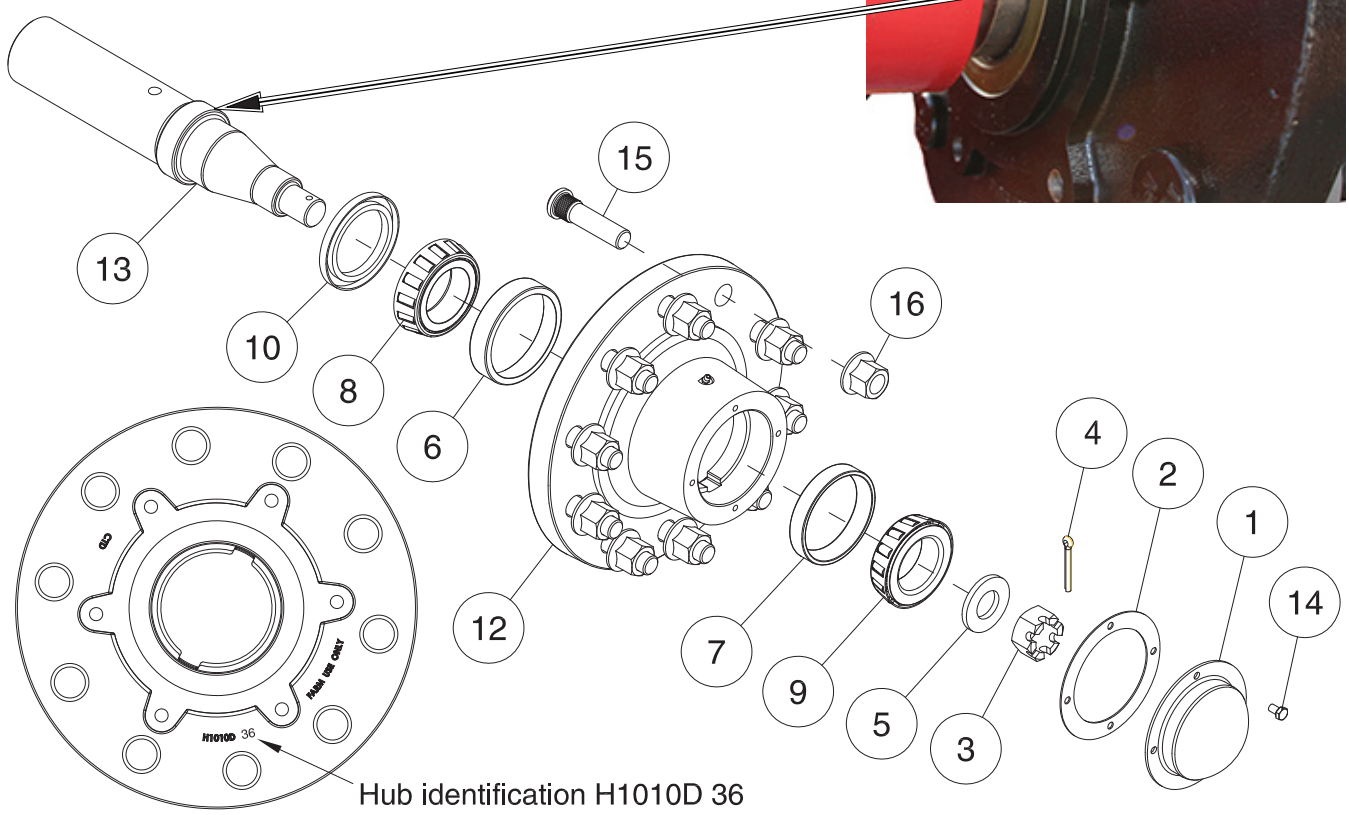

Item	Part No.	Description	Qty
1	S65333	Dust Cap - DC-27Z	1
2	N13959	Gasket	1
3	N19484	Hex Slotted Nut - 1 1/4 - 12 UNF	1
4	D-5238	Cotter Pin - 3/16 x 1 3/4 Lg	1
5	N13962	Flatwasher - 1.281 ID x 2 1/2 OD x 1/4 Thick	1
6	**S65334**	**Bearing Cup - Inner - TRB13523**	**1**
7	S65336	Bearing Cup - Outer - TRB10053	1
8	**S65337**	**Bearing Cone - Inner - TRB16687**	**1**
9	S65339	Bearing Cone - Outer - TRB03812	1
10	**S65332**	**Dust Seal - SE-67 - 3.375 ID x 4.631 OD x 0.438 WIDE**	**1**
12	**S64999**	**Hub - 10 Bolt - 15,000 lb (Includes Items 6, 7 and 15)**	**1**
	S-752	Grease Nipple (Not Shown)	1
13	**S64998**	**Spindle - 3 Dia**	**1**
14	D-5247	Hex Bolt - 5/16 x 1/2 Lg	4
15	S65335	Press-In Wheel Stud - M22 x 1.5 x 92mm - Grade 10.9	10
16	N55218	Flange Wheel Nut - M22 x 1.5 - Grade 10.9	10
	S64970	Hub and Spindle Assembly	

Hub and Spindle Assembly - S72080

New Hub and Spindle with 3 diameter seal area.

Supplied on units starting at Serial Numbers:
40 Quantum serial # QT40210486
50 Quantum serial # QT50210561
60 Quantum serial # QT60210745
70 Quantum serial # QT70210794
80 Quantum - ALL

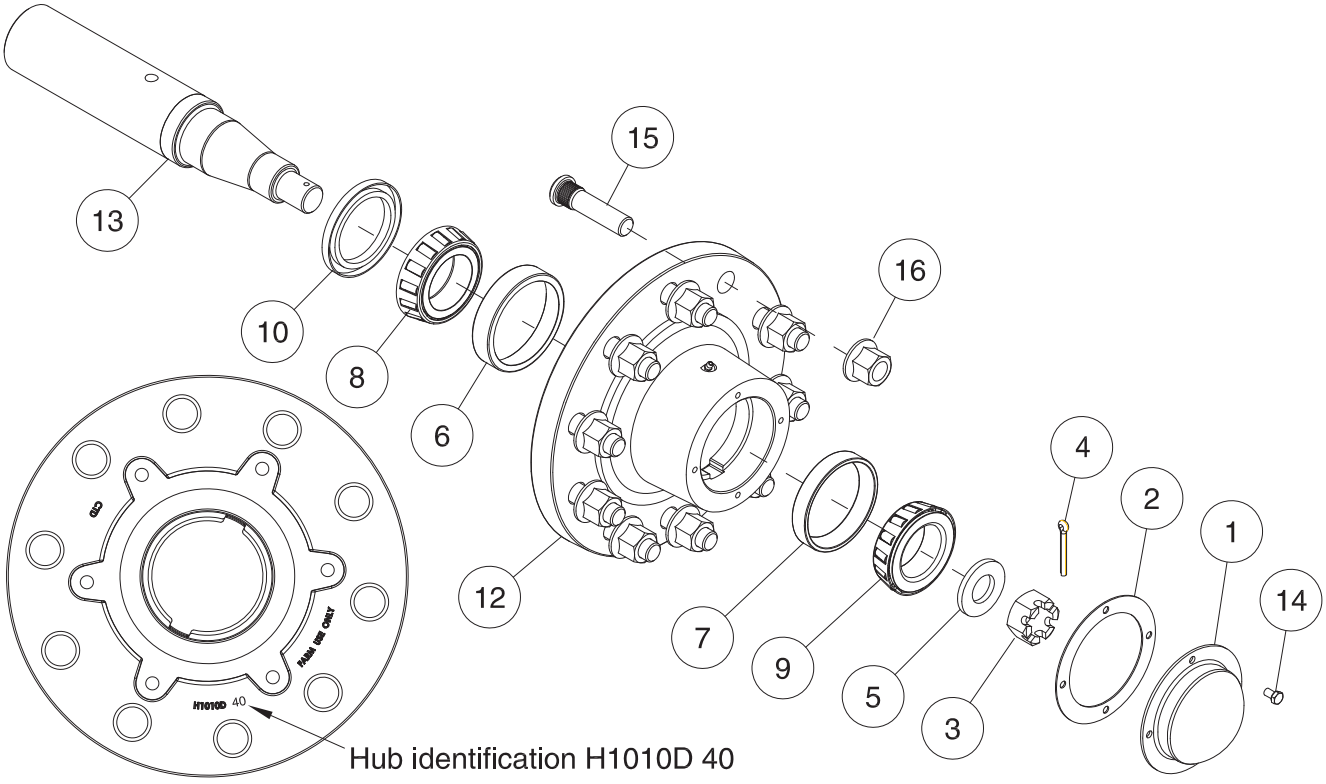

Hub identification H1010D 40

Item	Part No.	Description	Qty
1	S65333	Dust Cap - DC-27Z	1
2	N13959	Gasket - SE-49	1
3	N19484	Hex Slotted Nut - 1 1/4 - 12 UNF	1
4	D-5238	Cotter Pin - 3/16 x 1 3/4 Lg	1
5	N13962	Flatwasher - 1.281 ID x 2 1/2 OD x 1/4 Thick	1
6	**S72082**	**Bearing Cup - Inner - TRB32416**	**1**
7	S65336	Bearing Cup - Outer - TRB10053	1
8	**S72084**	**Bearing Cone - Inner - TRB07629**	**1**
9	S65339	Bearing Cone - Outer - TRB03812	1
10	**N13956**	**Dust Seal - SE-48**	**1**
12	**S72081**	**Hub - 10 Bolt - 15,000 lb (Includes Items 6, 7 and 15)**	**1**
	S-752	Grease Nipple (Not Shown)	1
13	**S72083**	**Spindle - 3 Dia**	**1**
14	D-5247	Hex Bolt - 5/16 x 1/2 Lg	4
15	S65335	Press-In Wheel Stud - M22 x 1.5 x 92mm - Grade 10.9	10
16	N55218	Flange Wheel Nut - M22 x 1.5 - Grade 10.9	10
	S72080	Hub and Spindle Assembly	

Hub and Spindle Assembly - N70874

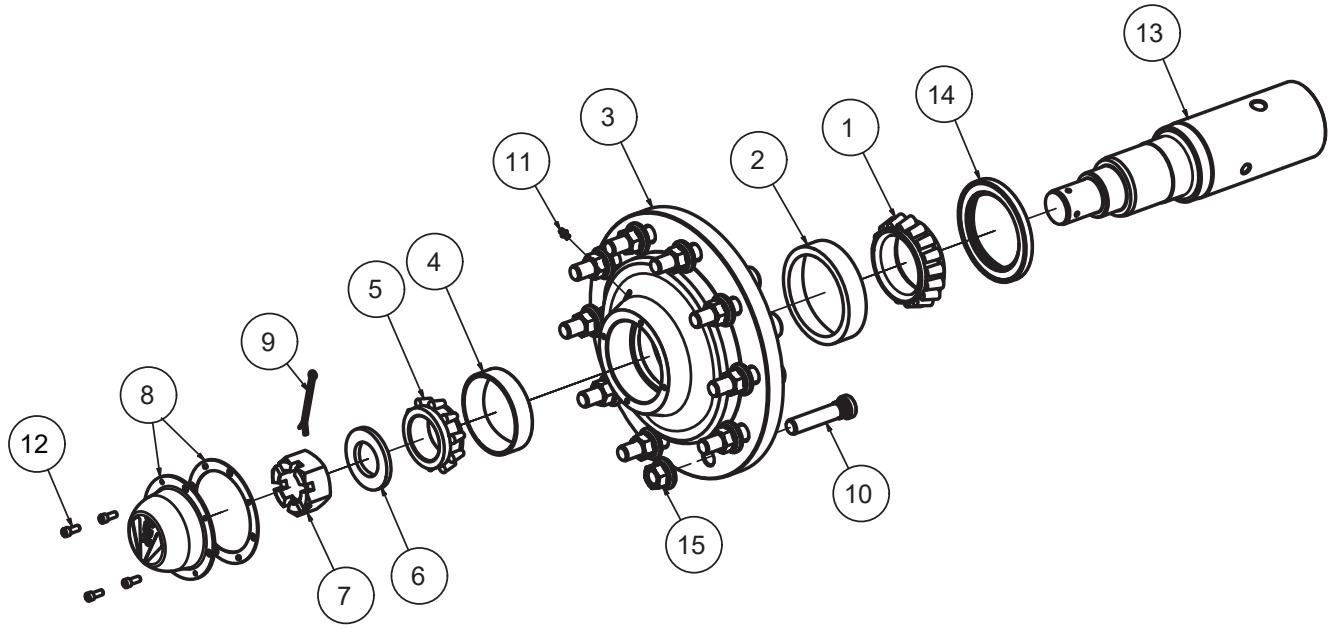

Item	Part No.	Description	Qty
		* Quantities Listed Are For One Axle	
1	N33549	Inner Bearing Cone - HM218248	1
2	N33547	Inner Bearing Cup - HM218210	1
3	N70816	Hub - H10	1
4	N33548	Outside Bearing Cup - HM212010	1
5	N33550	Outside Bearing Cone - HM212049	1
6	N33245	Washer - 2 1/8 ID x 4 1/2 OD x 3/16 Thick	1
7	N33243	Crown Nut - 2-12 UN	1
8	N70814	Dust Cap with Gasket	1
9	N33244	Cotter Pin - 3/8 x 3 1/2 Lg	1
10	N76550	Wheel Stud - M22 x 1.50 L102	10
11	S-752	Grease Nipple Straight - 1/4-28 UNF	1
12	F-1767	Hex Head Cap Screw - 5/16”-18 UNC x 3/4” Lg	4
13	N70812	Spindle - 4 1/2 Dia	1
14	N70813	Grease Seal - 111/152	1
15	K65178	Flange Wheel Nut - M22 x 1.5 WR32 - GR 10 (26mm Height)	10
	N70874	Hub and Spindle Assembly	

Notes

Section 3: Opener

Section Contents

Opener Assembly 3-2
- Steel - Prior to 2022 3-2
- Cast - 2022 to Present 3-4

Body Assembly 3-6
- Steel - Prior to 2022 3-6
- Cast - 2022 to Present 3-8

Packer Arm Assembly 3-10
- Steel - Prior to 2022 3-10
- Cast - 2022 to Present 3-11
- Pack Control - Prior to 2022 3-12
- Pack Control - 2022 to Present 3-13

Packer Wheel Assemblies 3-14

Seed Boot 3-15
- Injected Polymer Pair Row Kit 3-15
- Injected Polymer Left Sideband Kit 3-16
- Injected Polymer Right Side Band Kit 3-17
- Single Shoot 3-18
- Single Shoot 3” Spreader 3-19
- Double Shoot - Paired Row 3-20
- Double Shoot - High Presure NH3 Kit 3-21
- Double Shoot - Side Band - Left 3-22
- Double Shoot - Side Band Boot - Right 3-23

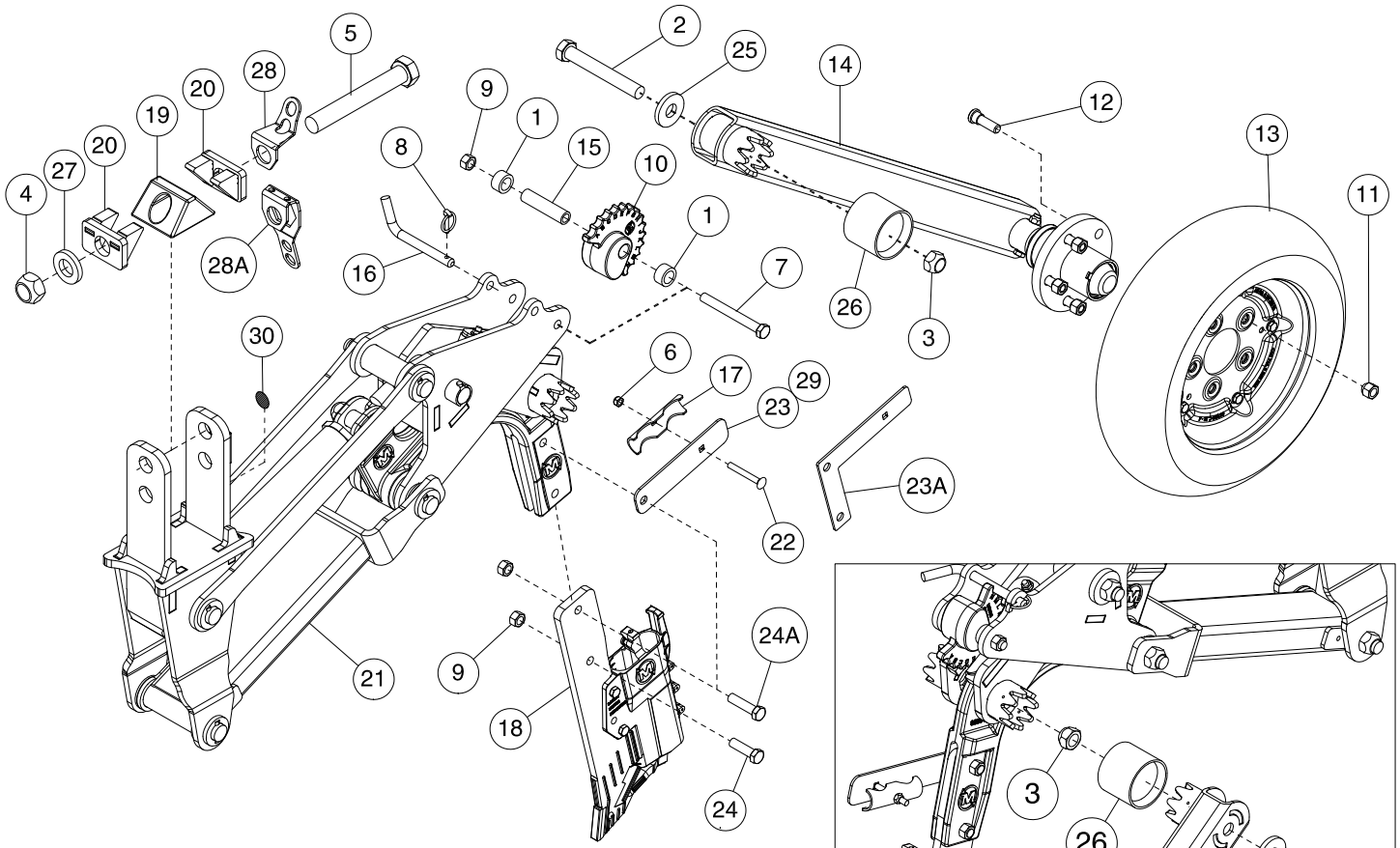

The new welded packer arm replaces the existing two-part assembly on welded Quantum row units models from 2018 to 2022.

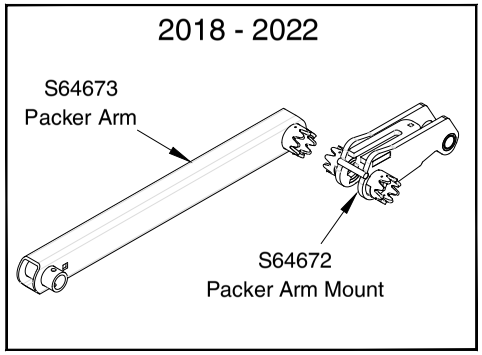

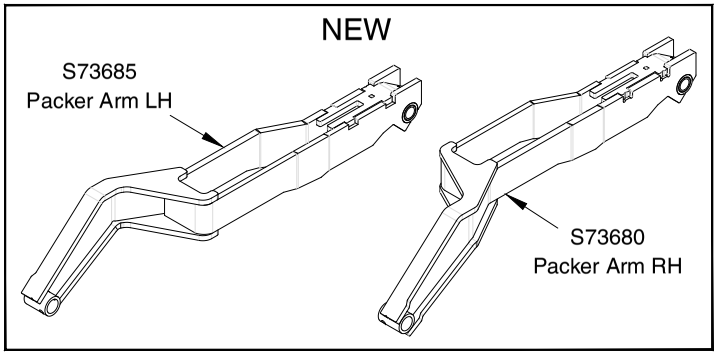

Opener Assembly - Steel - Prior to 2022

Item	Part No.	Description	Qty
1	S65000	Cam Brace Bushing - 0.765 ID x 1-1/8 OD x 0.58 Lg	2
2	D-5558	Hex Bolt - 3/4 x 6 Lg	1
3	D-5273	Lock Nut - 3/4 Unitorque	7
4	D-5274	Lock Nut - 1 Unitorque	1
5	S42952	Hex Bolt - 1 x 6 5/8 Lg	1
6	D-5272	Lock Nut - 5/16 Unitorque	1
7	S66403	Hex Bolt - 1/2 x 4 1/2 Lg - GR.8	1
8	S42294	Lynch Pin - 3/16 Dia x 1-3/8 Lg	1
9	S47110	Hex Nut - 1/2 Center Lock	3
10	S49260	Depth Cam - Cast	1
11	S50246	Tapered Wheel Nut - 1/2-20UNF	5
12	S50247	Press-In Wheel Stud - 1/2 - 20UNF x 1 3/4 Lg	5
13	S64194	Otico Tire - 4 1/2	1
	S64195	Otico Tire - 5 1/2	
14	S64673	Packer Arm	1
15	S64698	Bushing - 0.510 ID x 0.750 OD x 3.094 Lg	1
16	S65061	Depth Pin - 1/2 Dia	1
17	S65070	Hose Holder	1
18	S72321	Kit: Forged Paired Row IP - LD	1
	S72322	Kit: Forged Paired Row IP - HP	
	S72324	Forged Sideband Boot Kit - Left IP - LD	
	S72323	Forged Sideband Boot Kit - Right IP - LD	
	S72325	Forged Single Shoot Assembly	
19	S66337	Cast Center Wedge - 3 wide	1
20	S69115	Steel Outer Wedge - 2 3/4 wide (Replaced by S66338 - Cast Alloy)	2
21	S65650	Row Unit - Right (Includes items 1,2,3,7,8,9,10,11,12,14,15,16, 25 and 26) Shown	1
	S65651	Row Unit - Left (Includes items 1,2,3,7,8,9,10,11,12,14,15,16, 25 and 26)	
		Note: The only difference between the Left and Right Row Unit is the orientation of the packer arm assembly.	
22	S51466	Carriage Bolt - 5/16 x 2 Lg	1
23	S65851	Hose Holder Bracket - Cast Shankholder	1
23A	S68009	Hose Holder Bracket - Steel Shankholder	
24	W-487	Hex Bolt - 1/2 x 1 3/4 Lg	2
24A	S51464	Hex Bolt - 1/2 x 2 Lg - GR 8 (Hose Holder Replacement Bolt)	1
25	S65821	Washer - 2 1/4 OD x 25/32 ID	1
26	S69349	Sleeve Bushing	1
27	F-4490	Flatwasher - 1 1/32 ID x 1 7/8 OD x 1/4 Thick	1
28	S66245	Hose Holder - Opener	1
28A	S67170	Hose Holder - Opener - Low Profile - 6 per machine	
29	S65852	Hose Holder Kit - Cast Shankholder - Contains Items 6, 9, 17, 22, 23 & 24A	1
	S68273	Hose Holder Kit - Steel Shankholder - Contains Items 6, 9, 17, 22, 23A & 24A	
30	S66171	Openers Number Decal - 1 per machine	

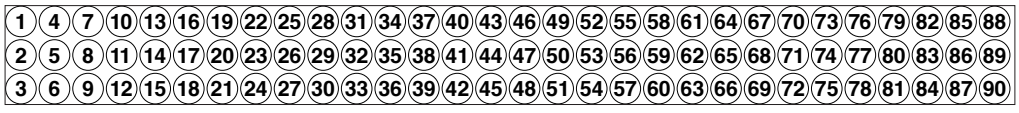

Abbreviations:
IP - Injected Polymer
LD - Low Disturbance
HP - High Penetration

Opener Assembly
Cast - 2022 to Present

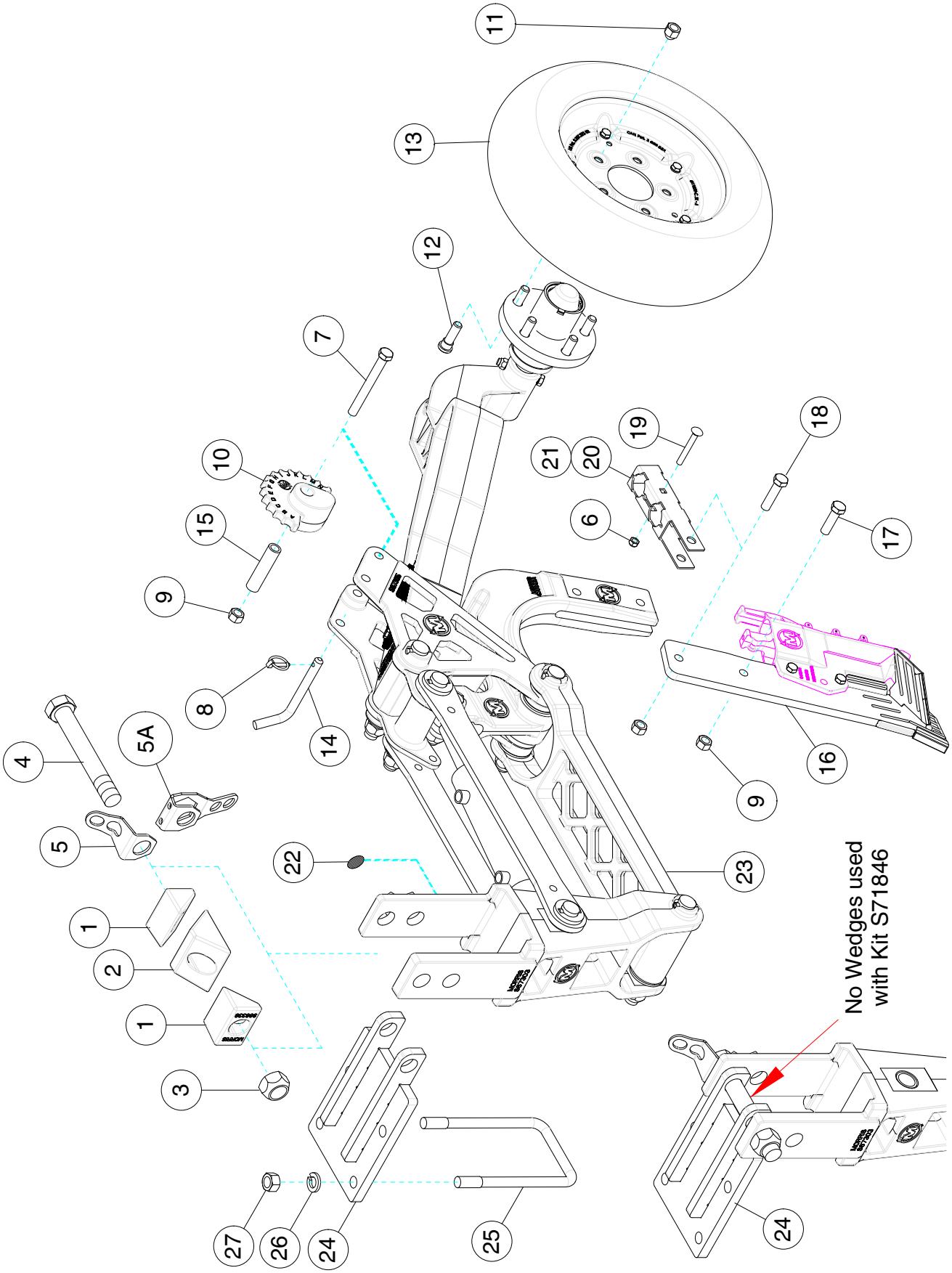

Opener Assembly - Cast - 2022 to Present

Item	Part No.	Description	Qty
1	S66338	Outer Wedge - Cast Alloy	2
2	S66337	Centre Wedge - Cast	1
3	D-5274	Lock Nut - 1 Unitorque	1
4	S42952	Hex Bolt - 1 x 6 5/8 Lg	1
	D12903	Hex Bolt - 1 x 7 Lg - Used on end opener with Bleed-Off Valve	
5	S66245	Hose Holder - Opener	1
5A	S67170	Hose Holder - Opener - Low Profile - 4 per machine	
6	D-5272	Lock Nut - 5/16 Unitorque	1
7	S66403	Hex Bolt - 1/2 x 4 1/2 Lg - GR.8	1
8	S42294	Lynch Pin - 3/16 Dia x 1-3/8 Lg	1
9	S47110	Hex Nut - 1/2 Center Lock	3
10	S49260	Depth Cam - Cast	1
11	S50246	Tapered Wheel Nut - 1/2-20UNF	5
12	S50247	Press-In Wheel Stud - 1/2 - 20UNF	5
13	* * * * *	See “Packer Wheel Assemblies”	1
14	S65061	Depth Pin - 1/2 Dia	1
15	S67944	Bushing - 0.510 ID x 0.750 OD x 1 31/32 Lg	1
16	S72321	Kit: Forged Paired Row IP - LD	1
	S72322	Kit: Forged Paired Row IP - HP	
	S72324	Forged Sideband Boot Kit - Left IP - LD	
	S72323	Forged Sideband Boot Kit - Right IP - LD	
	S72325	Forged Single Shoot Assembly	
17	W-487	Hex Bolt - 1/2 x 1 3/4 Lg	1
18	S51464	Hex Bolt - 1/2 x 2 Lg - GR 8 (Hose Holder Replacement Bolt)	1
19	S51466	Carriage Bolt - 5/16 x 2 Lg	1
20	S69305	Hose Holder	1
21	S72297	Hose Holder Kit - Contains Items 6, 9, 18, 19 & 20	1
22	S66171	Openers Number Decal - 2 per machine (40ft to 70ft) Not Shown	
	S73374	Openers Number Decal - 2 per machine (80ft) Shown	
		1 5 9 13 17 21 25 29 33 37 41 45 49 53 57 61 65 69 73 77 81 85 89 93 97 2 6 10 14 18 22 26 30 34 38 42 46 50 54 58 62 66 70 74 78 82 86 90 94 98 3 7 11 15 19 23 27 31 35 39 43 47 51 55 59 63 67 71 75 79 83 87 91 95 99 4 8 12 16 20 24 28 32 36 40 44 48 52 56 60 64 68 72 76 80 84 88 92 96 100	
23	S72302	Row Unit - Right (Includes items 7, 8, 9,10,11,12,14,15) - Shown	1
	S72303	Row Unit - Left (Includes items 7, 8, 9,10,11,12,14,15)	
	S71846	**10 inch and 25cm Offset Spacing Kit (Includes items 24, 25 and 26) (Kit is used on inner wing - 2 kits required per drill)**	
24	S71726	Offset Row Unit Mount - 25cm Spacing	
25	S39649	U-Bolt - 5/8 x 4 x 7 3/4 UL	2
26	W-526	Lockwasher - 5/8	4
27	W-517	Hex Nut - 5/8	4

Abbreviations:
IP - Injected Polymer
LD - Low Disturbance
HP - High Penetration

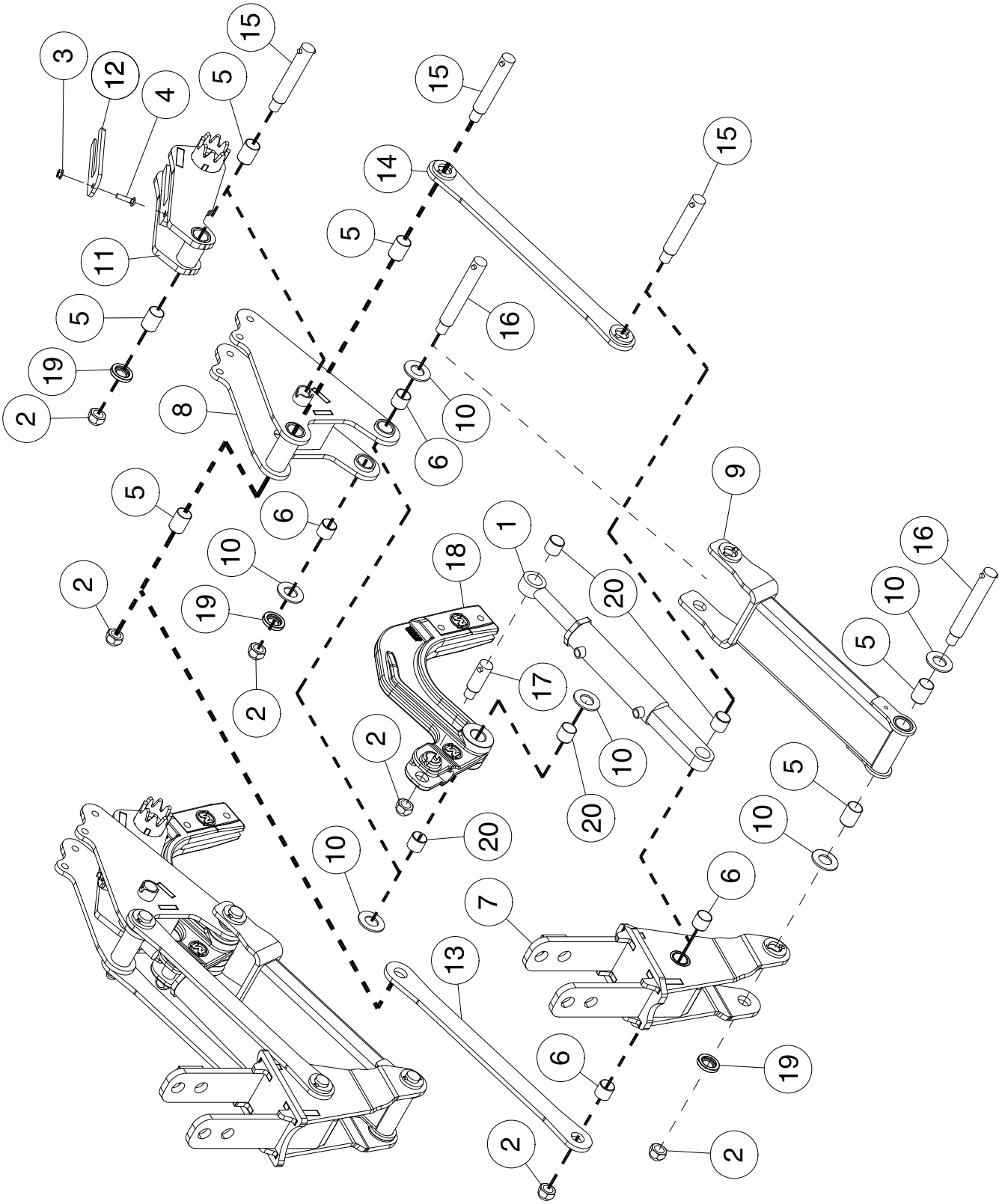
3
12
4
15
5
11
5
19
2
8
6
10
16
14
15
5
9
1
18
20
16
10
5
17
2
10
20
5
10
6
7
13
6
19
2

Body Assembly - Steel - Prior to 2022

Item	Part No.	Description	Qty
1	C64546	Cylinder - 1 3/4 Bore x 4 Stroke (Includes Item 20) (Seal Kit C71900)	1
2	D-5275	Locknut - 3/4 nylon insert	6
3	D-5278	Lock Nut - 5/16 Flanged	1
4	N31012	Carriage Bolt - 5/16 x 1 1/4 Lg	1
5	**S62986**	**Q2 Bushing - 1 ID x 1 1/8 OD x 1 1/2 Lg Nominal size**	**6**
6	**S72042**	**EWS Bushing - 1 ID x 1 1/8 OD x 1 Lg Nominal size**	**4**
7	S62998	Mounting Bracket - (Includes Item 6 Qty of 2)	1
8	S64119	Opener Body - (Includes Item 5 Qty of 2 and Item 6 Qty 2)	1
9	S64172	Bottom Link - (Includes Item 5 Qty of 2)	1
10	**S69398**	**Washer** - 1 1/32 ID x 2 OD x 1/8	6
11	S64672	Packer Arm Mount - (Includes Item 5 Qty of 2)	1
12	S66251	Shim - Depth Adjustment - 1/4 Thick	1
13	S64759	Strap - Top Link	1
14	S65009	Top Link	1
15	S65037	Pin - Chrome - 1 Dia x 4 21/32 UL	3
16	S65038	Pin - Chrome - 1 Dia x 5 9/16 UL	2
17	S65039	Pin - Chrome - 1 Dia x 1 29/32 UL	1
18	**S65048**	Cast Shankholder - (Includes Item 20 Qty of 2)	1
19	S72061	Washer - Machined Step - 0.765 ID x 1.063 ID x 1 9/16 OD x 0.266 Thick	3
20	**S72042**	**EWS Bushing - 1 ID x 1 1/8 OD x 1 Lg Nominal size**	**4**
	S73260	**Quantum Steel Row Unit Rebuild Kit (Includes Items 2, 5, 6, 10, 15, 16, 17, 19, 20)**	

The new welded packer arm replaces the existing two-part assembly on welded Quantum row units models from 2018 to 2022. This redesigned packer arm is a more robust solution. **Note Load Cell Packer Arm is S73725.**

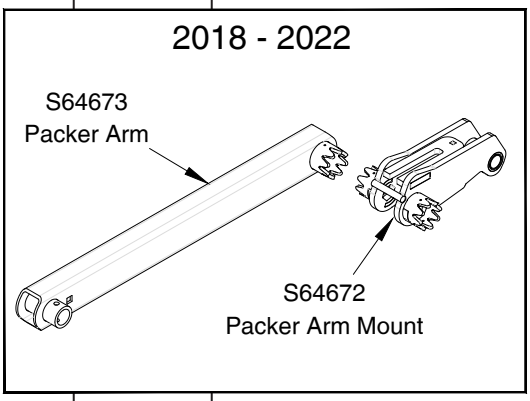

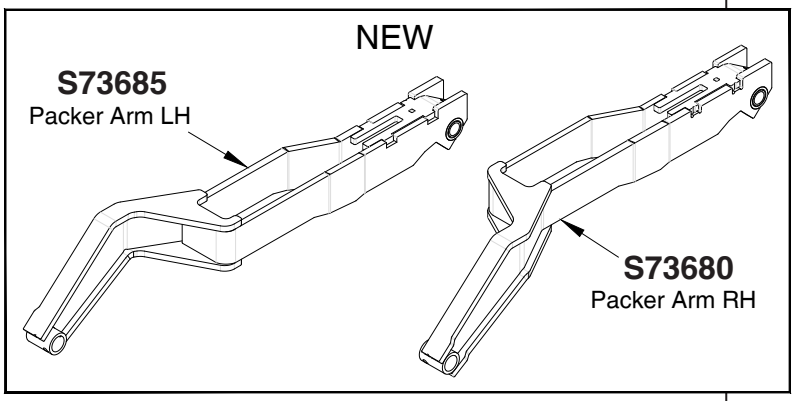

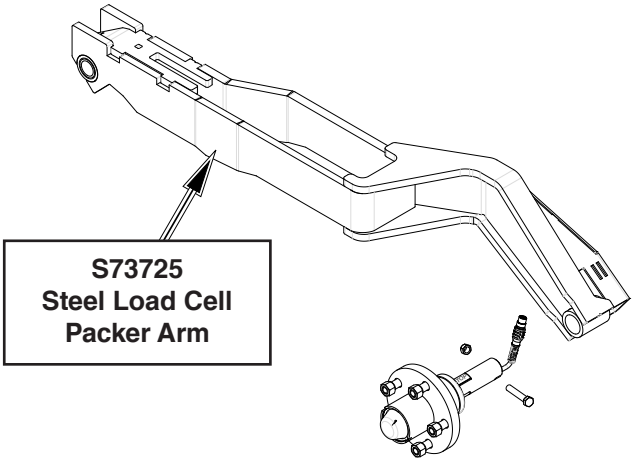

Body Assembly
Cast - 2022 to Present

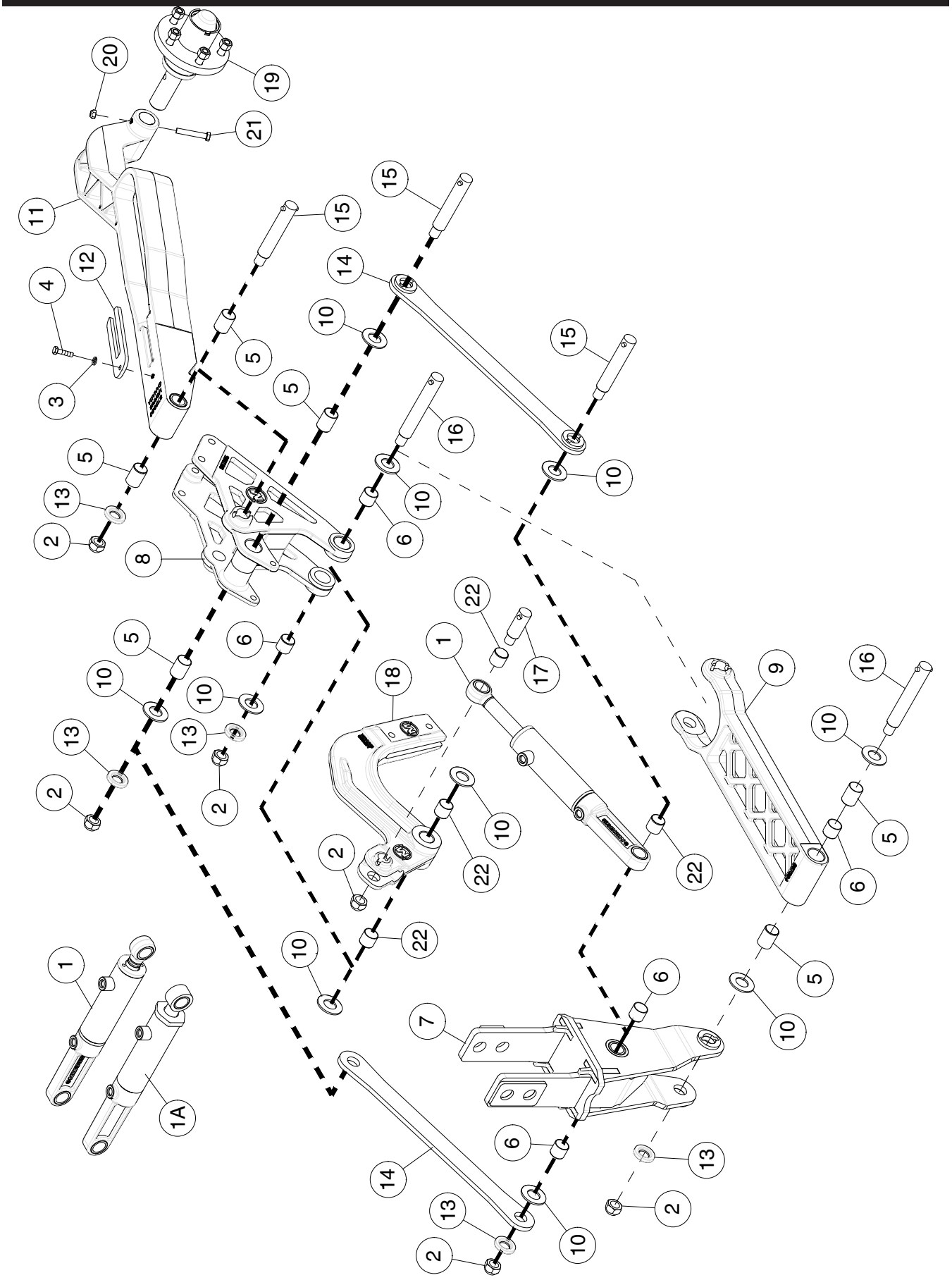

Body Assembly - Cast - 2022 to Present

Item	Part No.	Description	Qty
1	C72090	Cylinder - 1 3/4 Bore x 4 Stroke - (Includes Item 22 Qty of 2) **- 2023** (Seal Kit C72720)	1
1A	C68272	Cylinder - 1 3/4 Bore x 4 Stroke - (Includes Item 22 Qty of 2) (Seal Kit C71900)	
2	D-5275	Locknut - 3/4 nylon insert	6
3	W-522	Lock Washer - 5/16	1
4	F-1767	Hex Bolt - 5/16 x 3/4 Lg	1
5	S67549	Q2 Bushing - 1 ID x 1 1/4 OD x 1 1/2 Lg Nominal size	6
6	S59806	Q2 Bushing - 1 ID x 1 1/4 OD x 1 Lg Nominal size	5
7	**S67303**	**Mounting Bracket - Cast - (Includes Item 22 Qty of 2) - 2023**	1
	S69360	Mounting Bracket - Welded - (Includes Item 6 Qty of 2)	1
8	S67305	Opener Body - (Includes Item 5 Qty of 2 and Item 6 Qty 2)	1
9	S67304	Bottom Link - (Includes Item 5 Qty of 2 and Item 6 Qty 1)	1
10	S69398	Washer - 1 1/32 ID x 2 OD x 1/8	10
11	S72060	Packer Arm - Right - (Includes Item 5 Qty of 2) - Shown	1
	S72065	Packer Arm - Left - (Includes Item 5 Qty of 2)	1
12	S66251	Shim - Depth Adjustment - 1/4 Thick	1
13	S72061	Washer - Step - Machined - 0.800 ID x 1.063 ID x 1 9/16 OD x 0.266 Thick	5
14	S65009	Top Link	2
15	S69573	Pin - Chrome - 1 Dia x 5 1/16 UL	3
16	S69574	Pin - Chrome - 1 Dia x 5 23/32 UL	2
17	S69598	Pin - Chrome - 1 Dia x 1 29/32 UL	1
18	S67613	Cast Shankholder - (Includes Item 22 Qty of 2)	1
19	S48850	Spindle Hub Assembly	1
20	M-3388	Locknut - 3/8 Unitorque	1
21	W-480	Hex Bolt - 3/8 x 2 1/2 Lg	1
22	**S72046**	**EWS Bushing - 1 ID x 1 1/4 OD x 1 Lg Nominal size**	**4**
	S73284	**Quantum Cast Row Unit Rebuild Kit (Includes Items 2, 5, 6, 10, 13, 15, 16, 17, 22)**	

Packer Arm Assembly
Steel - Prior to 2022

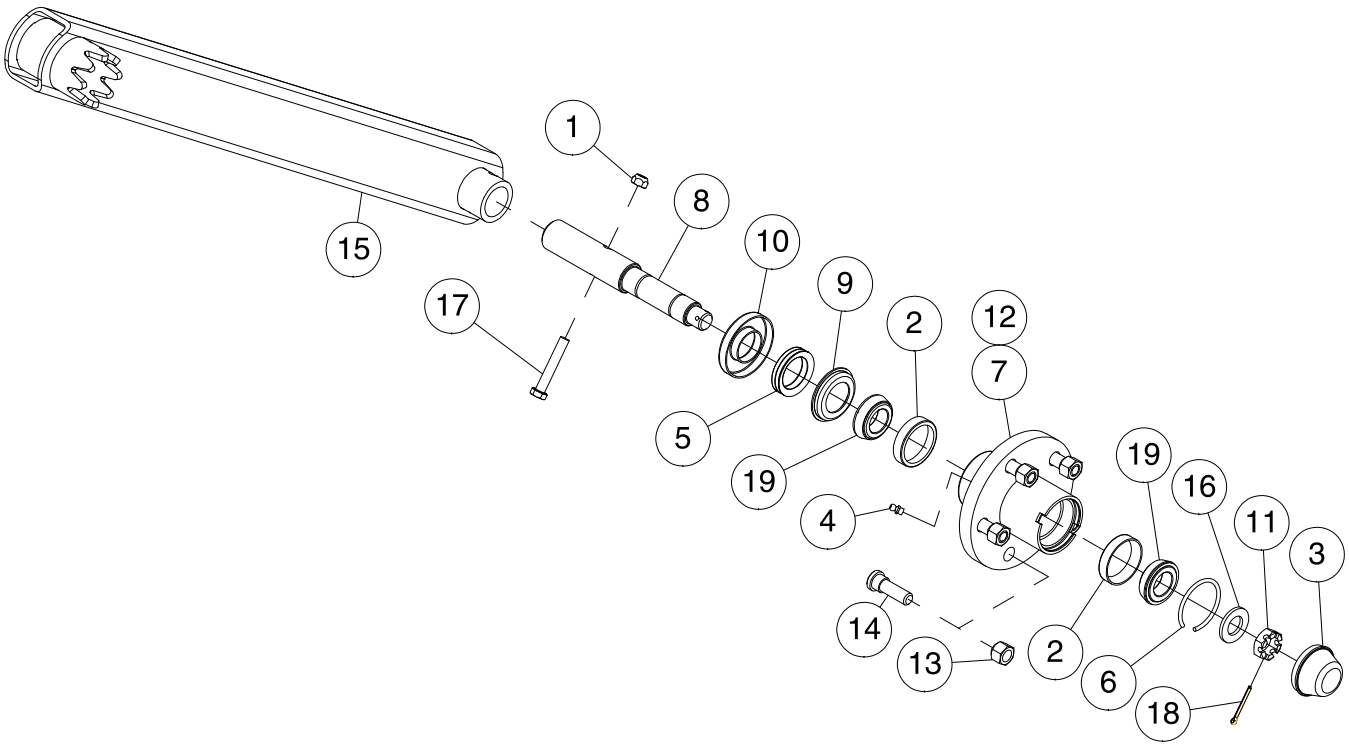

Item	Part No.	Description	Qty
1	M-3388	Lock Nut - 3/8 Unitorque	1
2	N14009	Bearing Cup	2
3	N14011	Dust Cap	1
4	S-752	Grease Zerk - 1/4	1
5	S48842	V-Seal - 1 1/4 Shaft	1
6	S48843	Dust Cap Retaining Wire	1
7	S48844	Hub Casting - 1000 Lb - 5 Bolt	1
8	S48846	Spindle - 1-1/4 Dia	1
9	S48847	Seal Counterface	1
10	S48848	Seal Retainer	1
11	S48849	Slotted Jam Nut - 3/4	1
12	S48850	Packer Hub Assembly (Includes Items# 2, 3, 4, 5, 6, 7, 8, 9, 10, 11, 13, 14, 16, 18 & 19)	1
13	S50246	Tapered Wheel Nut - 1/2	5
14	S50247	Press-In Wheel Stud - 1/2	5
15	S64673	Packer Arm	1
16	W-476	Washer - 3/4	1
17	W-479	Hex Bolt - 3/8 x 2 1/4 Lg	1
18	W-529	Cotter Pin - 1/8 x 1 Lg	1
19	W-4187	Bearing Cone	2

Packer Arm Assembly
Cast - 2022 to Present

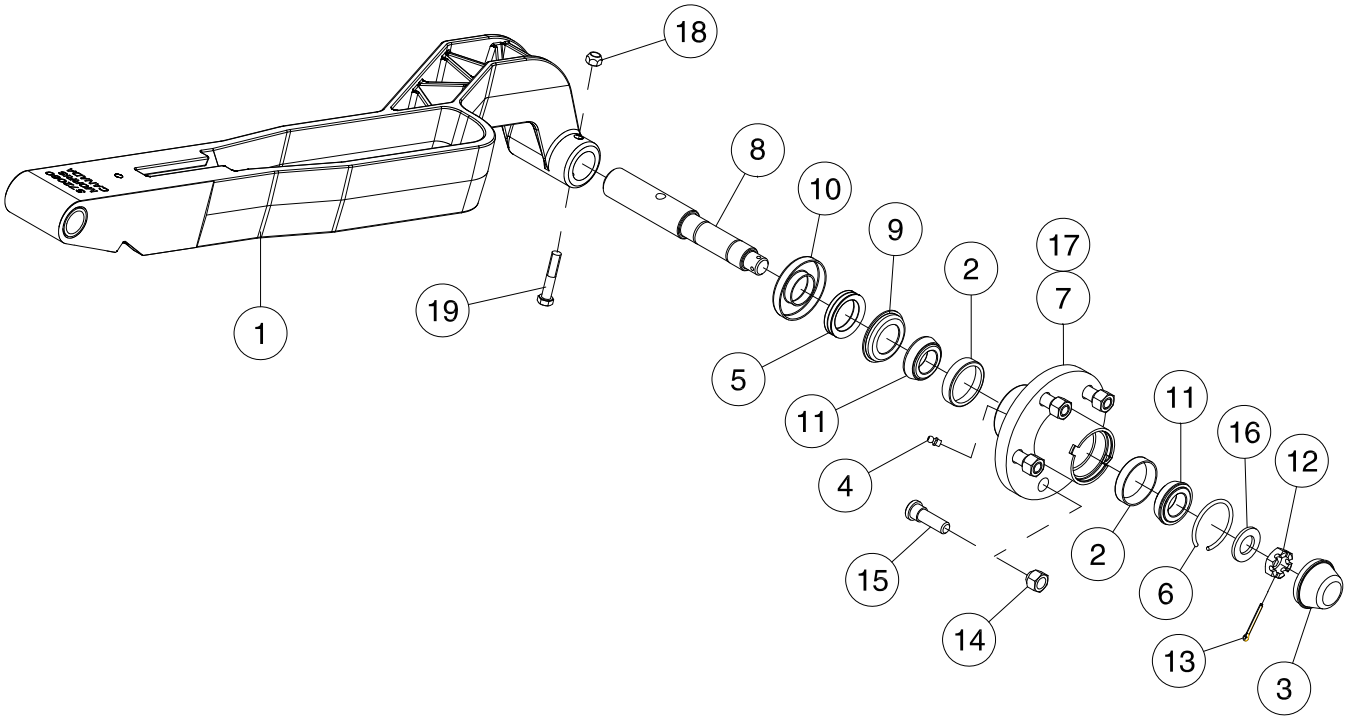

Item	Part No.	Description	Qty
1	S72060	Packer Arm - Right - Shown	1
	S72065	Packer Arm - Left	1
2	N14009	Bearing Cup	2
3	N14011	Dust Cap	1
4	S-752	Grease Zerk - 1/4	1
	K72371	Grease Fitting - M08 x 1.25 - Straight - (98608A1)	
5	S48842	V-Seal - 1 1/4 Shaft	1
6	S48843	Dust Cap Retaining Wire	1
7	S48844	Hub Casting - 1000 Lb - 5 Bolt	1
8	S48846	Spindle - 1-1/4 Dia	1
9	S48847	Seal Counterface	1
10	S48848	Seal Retainer	1
11	W-4187	Bearing Cone	2
12	S48849	Slotted Jam Nut - 3/4	1
13	W-529	Cotter Pin - 1/8 x 1 Lg	1
14	S50246	Tapered Wheel Nut - 1/2	5
15	S50247	Press-In Wheel Stud - 1/2	5
16	W-476	Washer - 3/4	1
17	S48850	Packer Hub Assembly (Includes Items# 2, 3, 4, 5, 6, 7, 8, 9, 10, 11, 12, 13, 14, 15 & 16)	1
18	M-3388	Lock Nut - 3/8 Unitorque	1
19	W-480	Hex Bolt - 3/8 x 2 1/2 Lg	1

Packer Arm Assembly
Pack Control - Prior to 2022

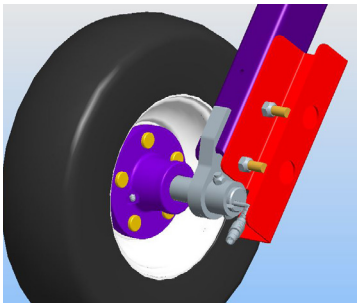

Item	Part No.	Description	Qty
1	M-3388	Lock Nut - 3/8 Unitorque	1
2	N14009	Bearing Cup	2
3	N14011	Dust Cap	1
4	S-752	Grease Zerk - 1/4	1
5	S48842	V-Seal - 1 1/4 Shaft	1
6	S48843	Dust Cap Retaining Wire	1
7	S48844	Hub Casting - 1000 Lb - 5 Bolt	1
8	S66278	Spindle - **Digi-Star**	1
9	S48847	Seal Counterface	1
10	S48848	Seal Retainer	1
11	S48849	Slotted Jam Nut - 3/4	1
12	S67715	Axle Assembly - **Digi-Star** (Includes Items# 2, 3, 4, 5, 6, 7, 8, 9, 10, 11, 13, 14, 16, 18 & 19)	1
13	S50246	Tapered Wheel Nut - 1/2	5
14	S50247	Press-In Wheel Stud - 1/2	5
15	S66267	Packer Arm - **Digi-Star**	1
16	W-476	Washer - 3/4	1
17	W-479	Hex Bolt - 3/8 x 2 1/4 Lg	1
18	W-529	Cotter Pin - 1/8 x 1 Lg	1
19	W-4187	Bearing Cone	2
20	S67885	Zip Tie - Push Mount	3
21	S69154	Guard - Pack Master Cable	1
22	S47593	Carriage Bolt - 1/2 x 3 1/2 Lg	2
23	F-3405	Locknut - 1/2 Unitorque	2
	S67716	Pack Control Arm complete with DIGI-STAR. (Includes Items 1 to 23)	
	S71738	Pack Control Stubble Guard Field Kit (Includes Items 21 to 23	

Packer Arm Assembly
Pack Control - 2022 to Present

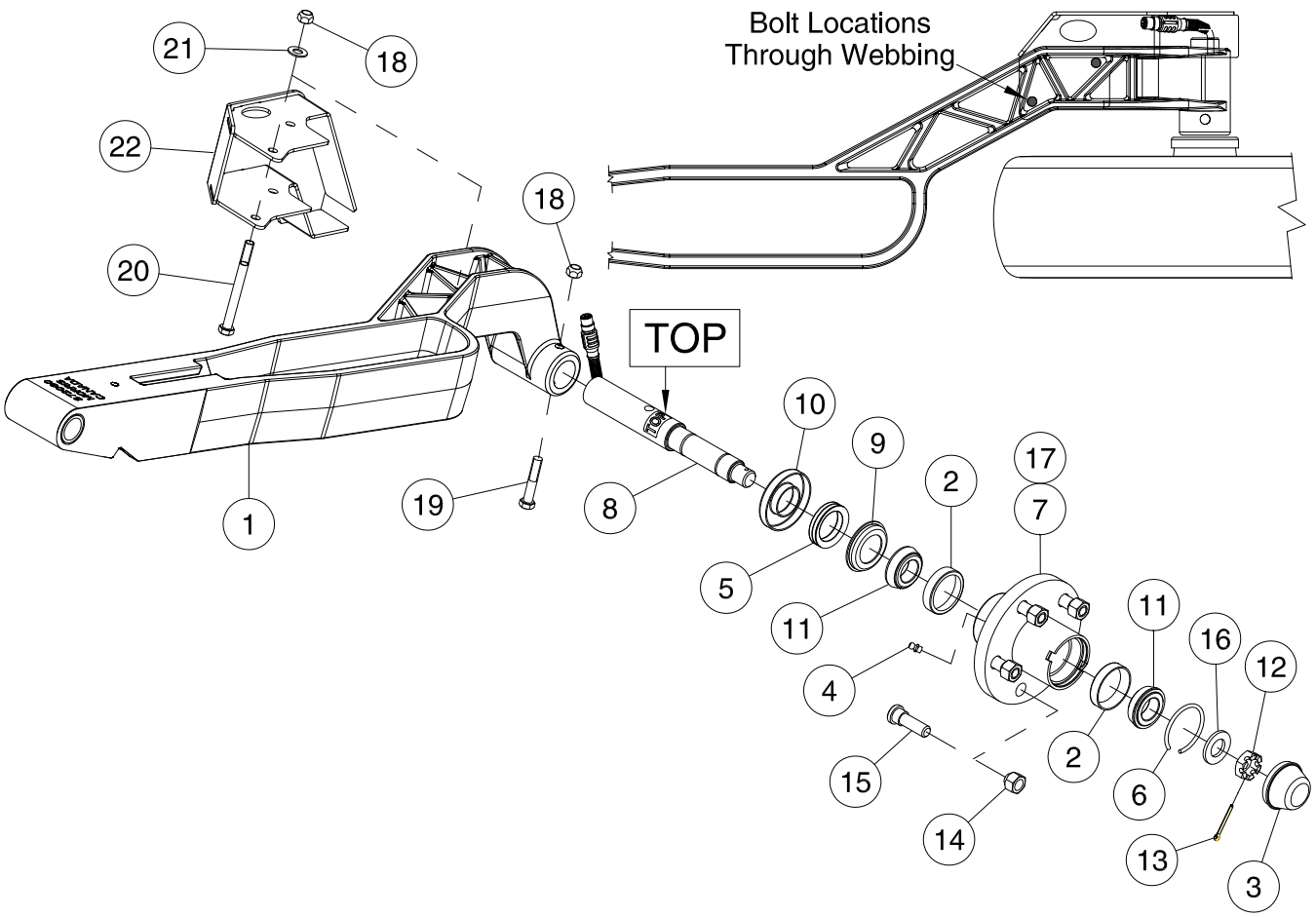

Item	Part No.	Description	Qty
1	S72060	Packer Arm - Right	1
	S72292	**Pack Force Spindle and Guard Kit. (Includes ALL Items below)**	
2	N14009	Bearing Cup	2
3	N14011	Dust Cap	1
4	S-752	Grease Zerk - 1/4	1
	K72371	Grease Fitting - M08 x 1.25 - Straight - (98608A1)	
5	S48842	V-Seal - 1 1/4 Shaft	1
6	S48843	Dust Cap Retaining Wire	1
7	S48844	Hub Casting - 1000 Lb - 5 Bolt	1
8	S72200	Spindle - 1-1/4 Dia - Digi-Star	1
9	S48847	Seal Counterface	1
10	S48848	Seal Retainer	1
11	W-4187	Bearing Cone	2
12	S48849	Slotted Jam Nut - 3/4	1
13	W-529	Cotter Pin - 1/8 x 1 Lg	1
14	S50246	Tapered Wheel Nut - 1/2	5
15	S50247	Press-In Wheel Stud - 1/2	5
16	W-476	Washer - 3/4	1
17	S72190	Packer Hub Assembly (Includes Items# 2, 3, 4, 5, 6, 7, 8, 9, 10, 11, 12, 13, 14, 15 & 16)	1
18	M-3388	Lock Nut - 3/8 Unitorque	5
19	W-480	Hex Bolt - 3/8 x 2 1/2 Lg	1
20	C-1550	Hex Bolt - 3/8 x 4 Lg	2
21	D-5489	Washer - 13/32 ID x 13/16 OD x 16 GA	2
22	S72094	Guard -Pack Control - Cast Arm - Right	1

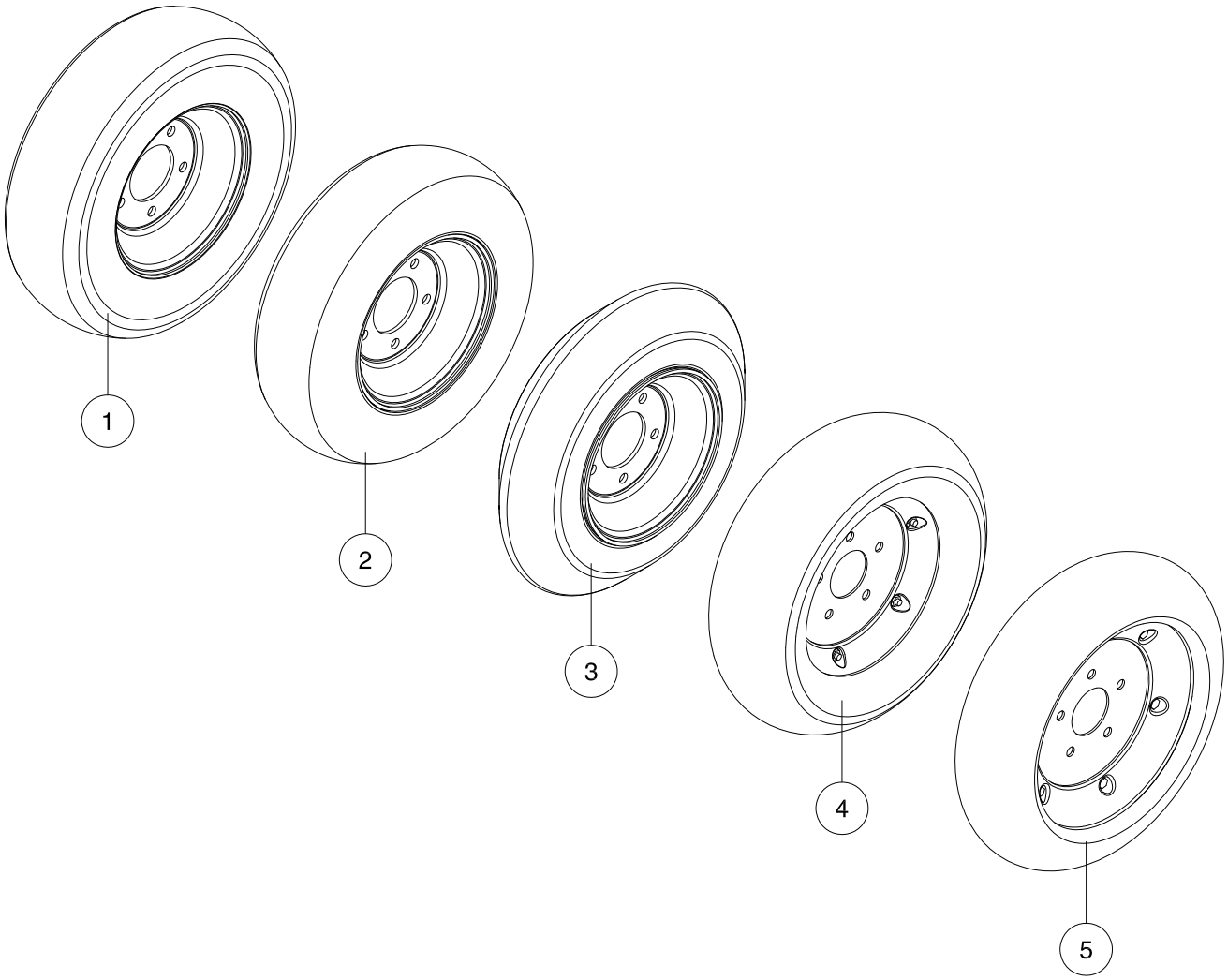

Item	Part No.	Description	Qty
1	S44300	Semi Pneumatic Tire - 480 x 8	1
2	S44900	Semi Pneumatic Tire - 550 x 8	1
3	S47093	“V” Crown Packer Tire - 400 x 8	1
	S73310	“V” Crown Packer Tire - 4.50 x 8	1
4	S64195	5.5” Otico Tire - 425 x 140L (Sidewall ID # 017454)	1
	S76885	5.5” Otico Tire - 425 x 140L (Sidewall ID # 028456)	1
5	S72075	4.5” AIC Tire - (Replaces S64194 - 4.5” Otico Tire)	1
	S73086	4.5” HD Tire	1

Seed Boot
Injected Polymer Pair Row Kit

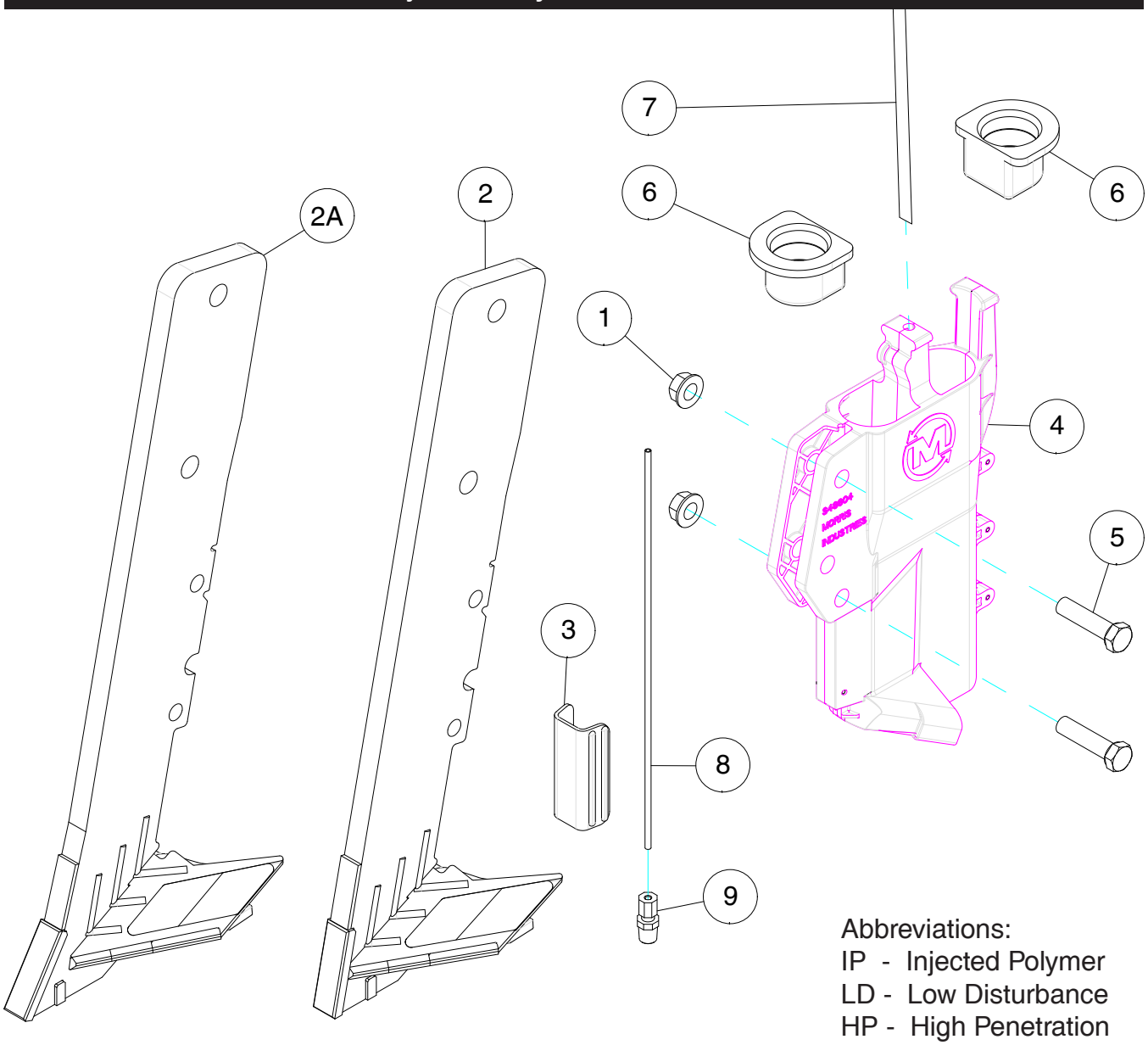

Item	Part No.	Description	Qty
1	S27987	Lock Nut - 3/8 Flange W/Center Lock	2
2	S72185	Forged Shank W/Carbide - Paired Row LD	1
2A	S72306	Forged Shank W/Carbide - Paired Row HP	1
3	S65074	Wear Guard - Claded	1
4	S56485	IP Paired Row Seed Boot	1
5	W-477	Hex Bolt - 3/8 x 1 1/2 Lg.	2
6	S47076	Secondary Hose Grommet - 15/16 ID Hose - Prior to 2023	2
7	* * * * *	Liquid Tube - 1/4 OD - See Liquid Kit Supplier for Tube	1
8	* * * * *	Injector Tube - 1/8 OD - See NH3 Kit Supplier for Tube	1
9	S48814	Compression Fitting - 1/8 x 1/8	1
	S72321	Kit: Forged Paired Row IP - LD (Contains Items 1, 2, 3, 4 & 5)	
	S72322	Kit: Forged Paired Row IP - HP (Contains Items 1, 2A, 3, 4 & 5)	

Seed Boot
Injected Polymer Left Sideband Kit

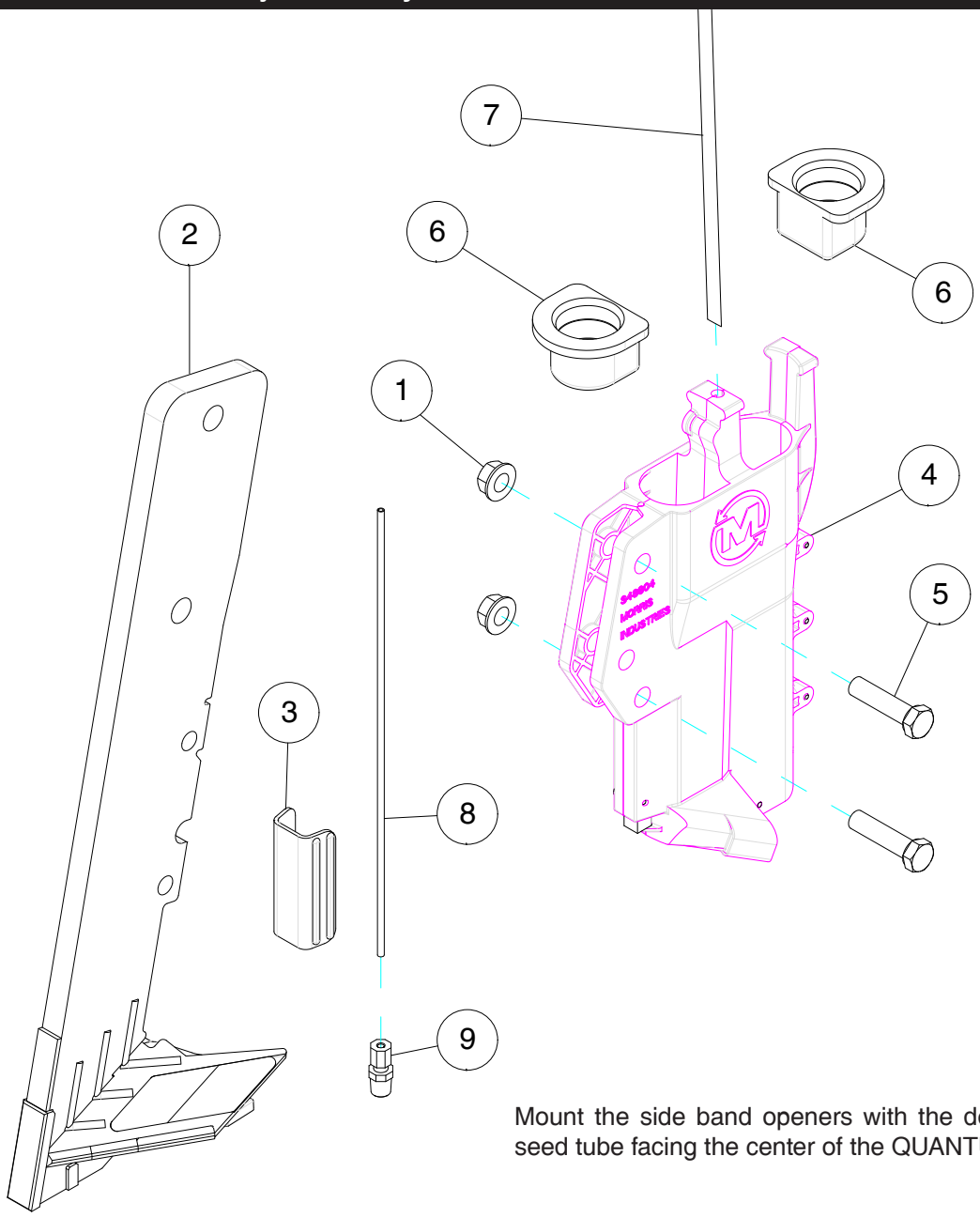

Mount the side band openers with the deflector and seed tube facing the center of the QUANTUM Air Drill.

Item	Part No.	Description	Qty
1	S27987	Lock Nut - 3/8 Flange W/Center Lock	2
2	S72309	Forged Shank W/Carbide - Sideband Left LD	1
3	S65074	Wear Guard - Claded	1
4	S56482	IP (Injected Polymer) Left Sideband Seed Boot	1
5	W-477	Hex Bolt - 3/8 x 1 1/2 Lg	2
6	S47076	Secondary Hose Grommet - 15/16 ID Hose - Prior to 2023	2
7	* * * * *	Liquid Tube - 1/4 OD - See Liquid Kit Supplier for Tube	1
8	* * * * *	Injector Tube - 1/8 OD - See NH3 Kit Supplier for Tube	1
9	S48814	Compression Fitting - 1/8 x 1/8	1
	S72324	Forged Sideband Boot Kit - Left IP - LD (Contains Items 1, 2, 3, 4 & 5)	1

Seed Boot
Injected Polymer Right Side Band Kit

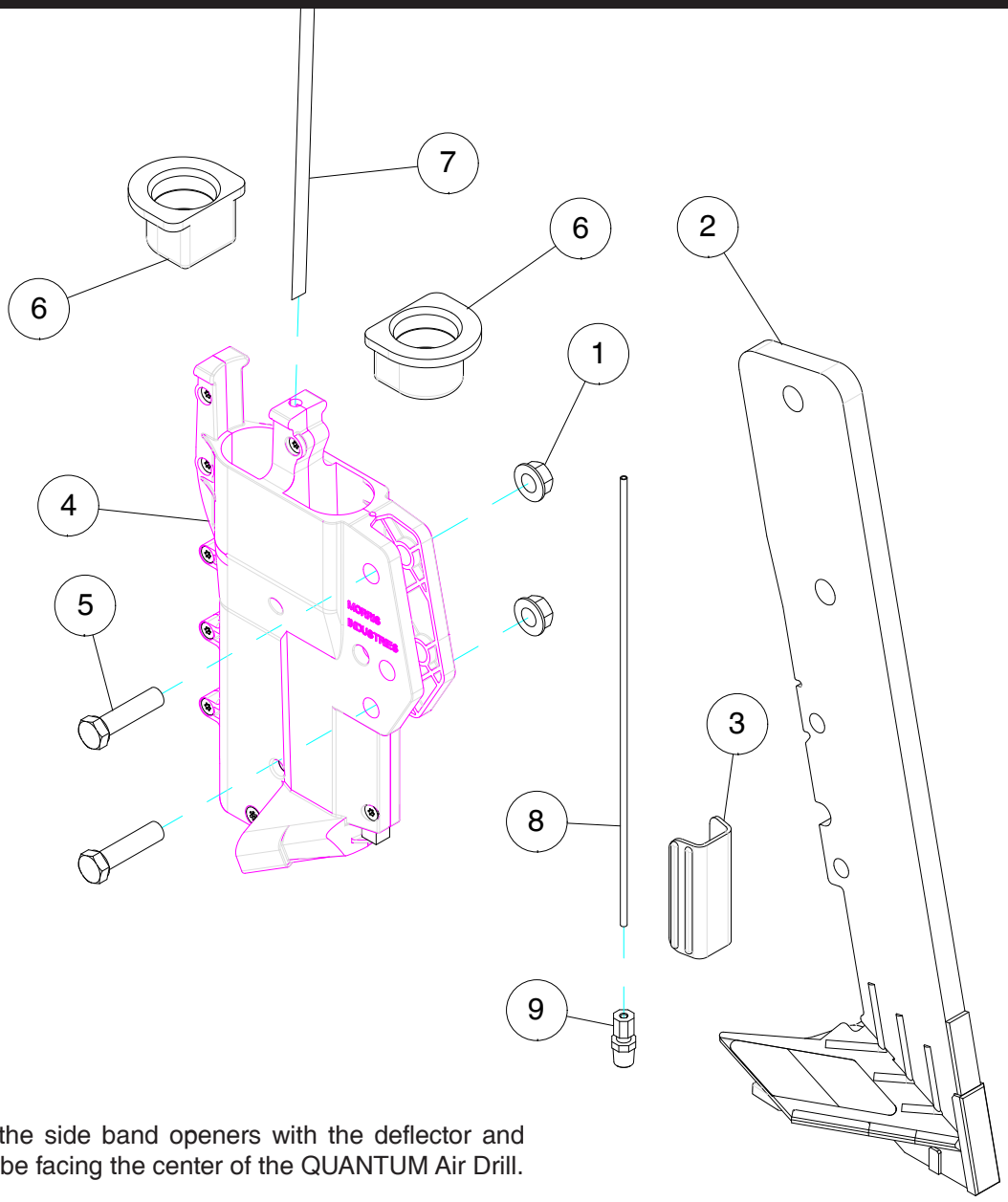

Mount the side band openers with the deflector and seed tube facing the center of the QUANTUM Air Drill.

Item	Part No.	Description	Qty
1	S27987	Lock Nut - 3/8 Flange W/Center Lock	2
2	S72308	Forged Shank W/Carbide - Sideband Right LD	1
3	S65074	Wear Guard - Claded	1
4	S56483	IP (Injected Polymer) Right Sideband Seed Boot	1
5	W-477	Hex Bolt - 3/8 x 1 1/2 Lg.	2
6	S47076	Secondary Hose Grommet - 15/16 ID Hose - Prior to 2023	2
7	* * * * *	Liquid Tube - 1/4 OD - See Liquid Kit Supplier for Tube	1
8	* * * * *	Injector Tube - 1/8 OD - See NH3 Kit Supplier for Tube	1
9	S48814	Compression Fitting - 1/8 x 1/8	1
	S72323	Forged Sideband Boot Kit - Right IP - LD- (Contains Items 1, 2, 3, 4 & 5)	1

Seed Boot
Single Shoot

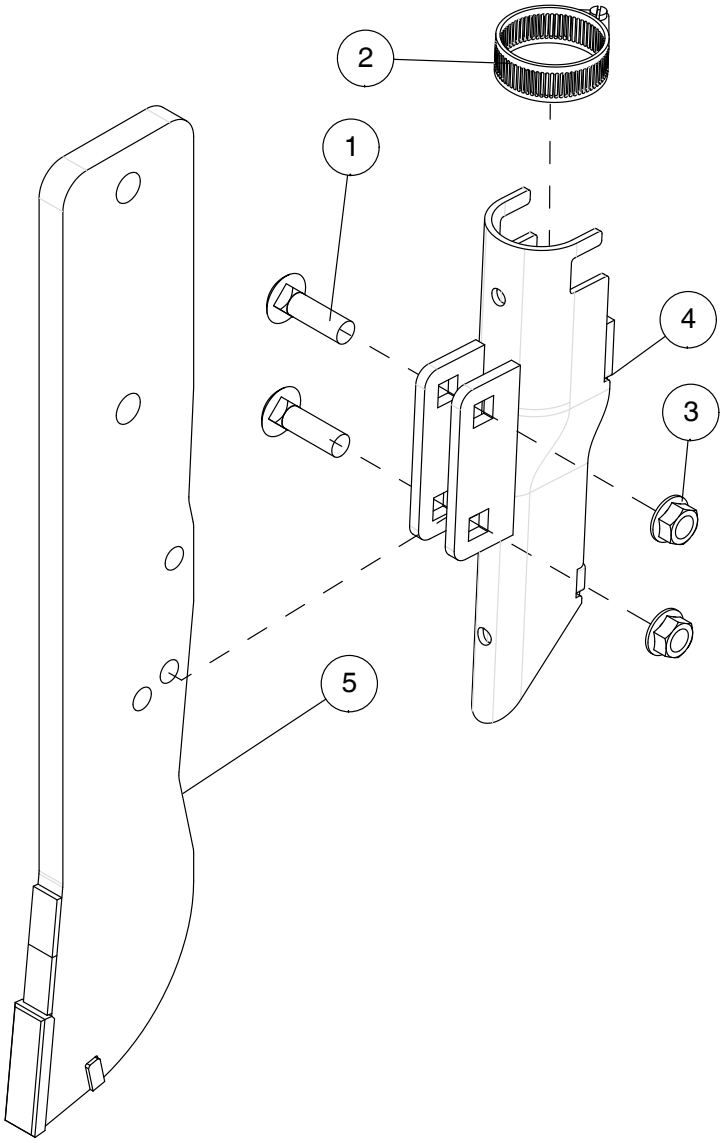

Item	Part No.	Description	Qty
1	D-5260	Carriage Bolt - 3/8 x 1-1/4 Lg	2
2	N11470	Hose Clamp	1
3	S27987	Center Lock Flange Lock Nut - 3/8	2
4	S42865	Single Shoot Boot	1
5	S72310	Forged Shank W/Carbide	1
	S72325	Forged Single Shoot Assembly - (Includes Items 1, 3, 4 and 5)	

Seed Boot
Single Shoot 3” Spreader

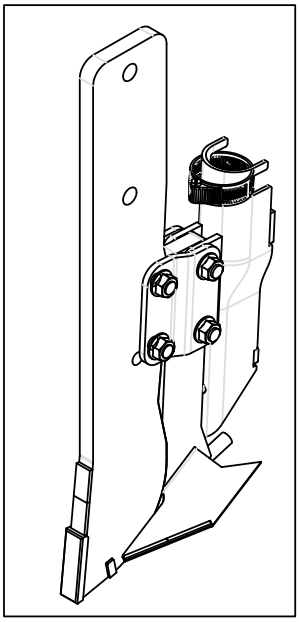

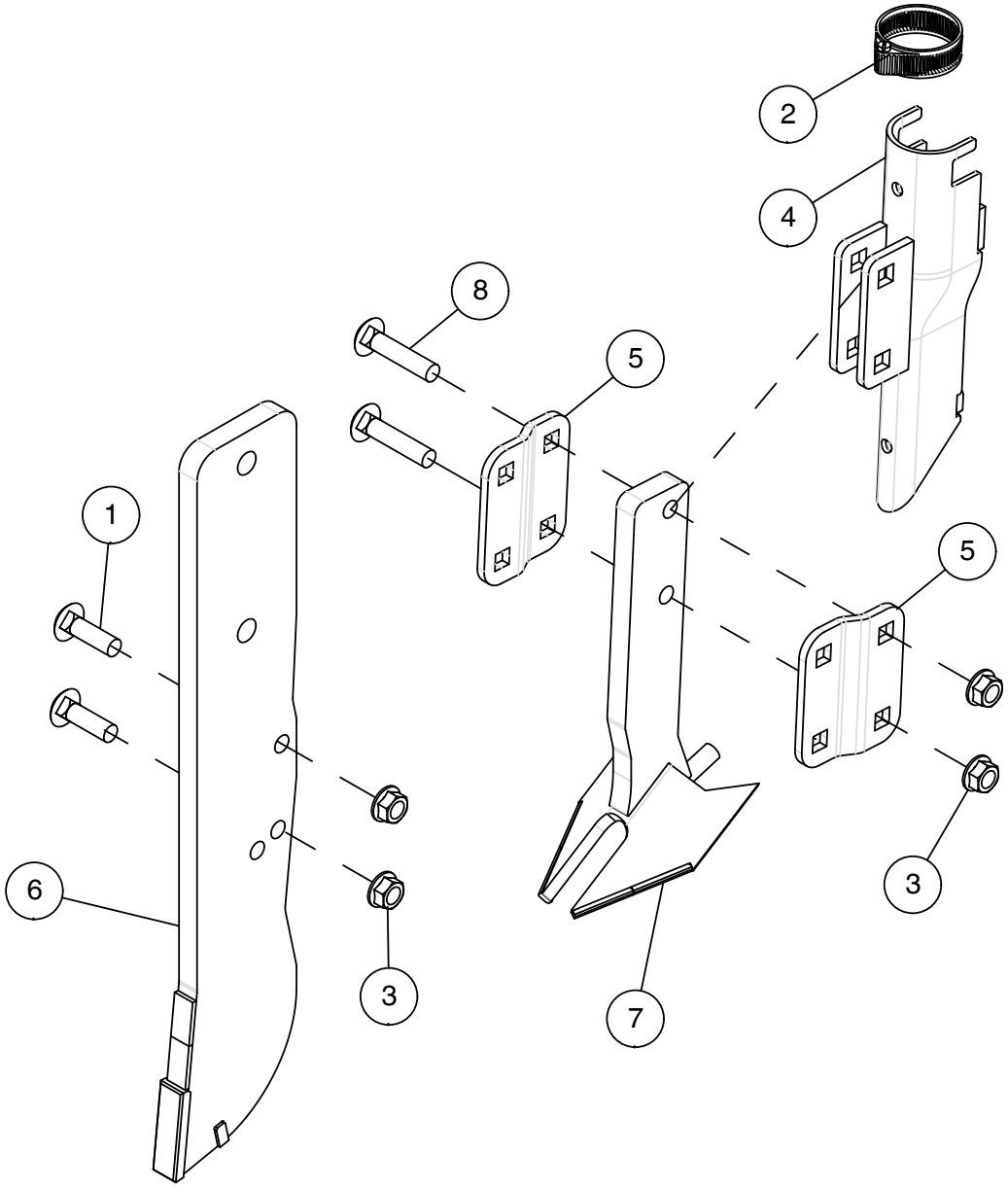

Item	Part No.	Description	Qty
1	D-5260	Carriage Bolt - 3/8 x 1-1/4 Lg	2
2	N11470	Hose Clamp	1
3	S27987	Center Lock Flange Lock Nut - 3/8	4
4	S42865	Single Shoot Boot	1
5	S45269	Mounting Plate	2
6	S72310	Forged Shank W/Carbide	1
7	S47337	3” Wear Shovel	1
8	S31980	Carriage Bolt - 3/8 x 1-3/4 Lg	2

Seed Boot
Double Shoot - Paired Row

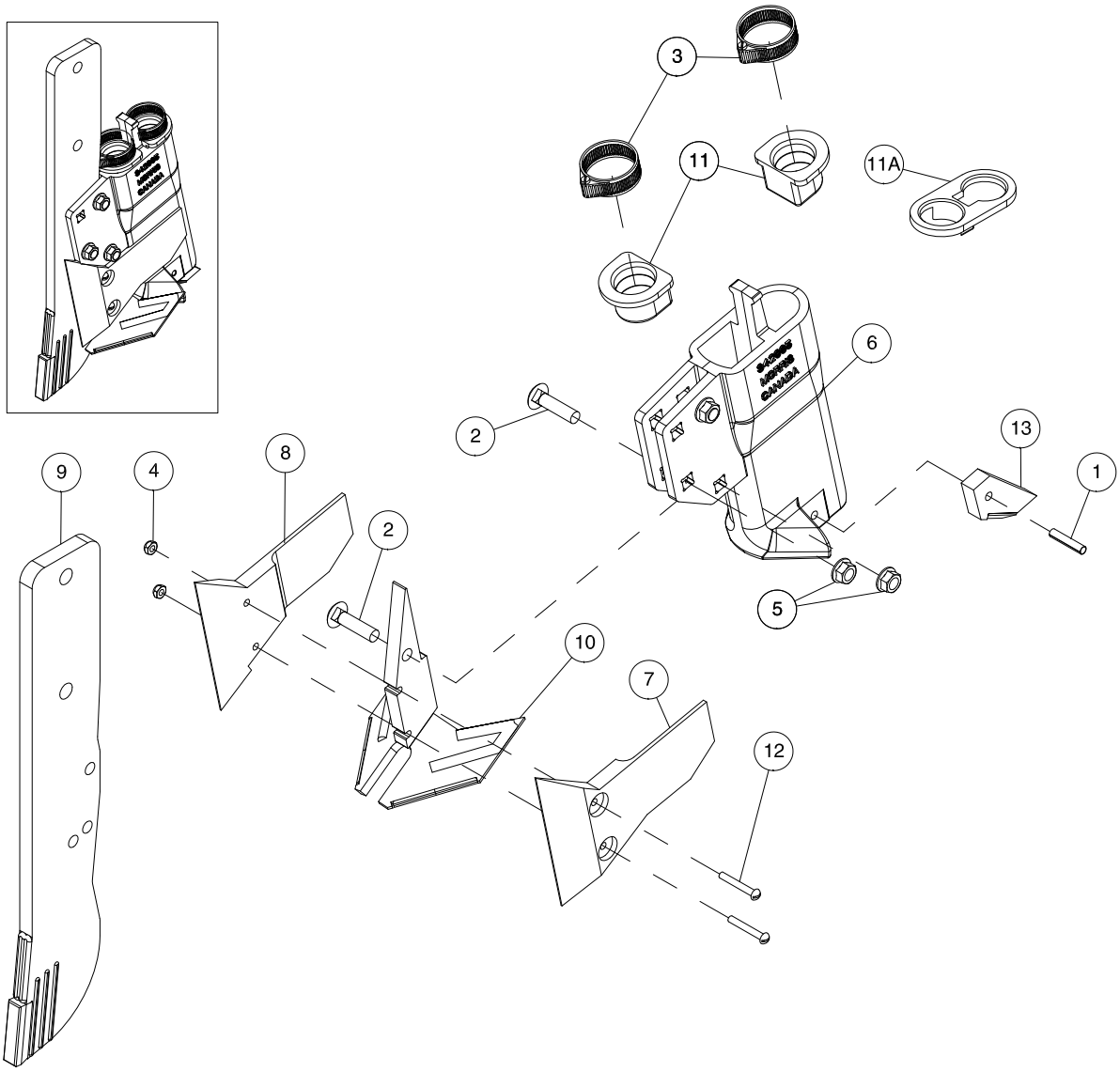

Item	Part No.	Description	Qty
1	D-5243	Roll Pin	1
2	D-5261	Carriage Bolt - 3/8 x 1-1/2 Lg	3
3	N11470	Hose Clamp	2
4	N37787	Nylon Insert Locknut - #10-24	2
5	S27987	Center Lock Flange Lock Nut - 3/8	3
6	S42965	Cast Double Shoot Boot	1
7	S45312	Mud Guard Option Left	1
8	S45313	Mud Guard Option Right	1
9	S72310	Forged Shank W/Carbide	1
10	S45470	Paired Row Shovel	1
11	S47076	Secondary Hose Grommet Option - 15/16 ID Hose - Prior to 2023	2
11A	S50245	Secondary Hose Grommet Option - 1.125 ID Hose	
12	S47128	Machine Screw - #10-24 x 1 3/8	2
13	S47980	Carbide Wear Tail	1
	S46181	Kit - Mud Guards (Includes Items 4, 7, 8, and 12)	

Seed Boot
Double Shoot - High Presure NH3 Kit

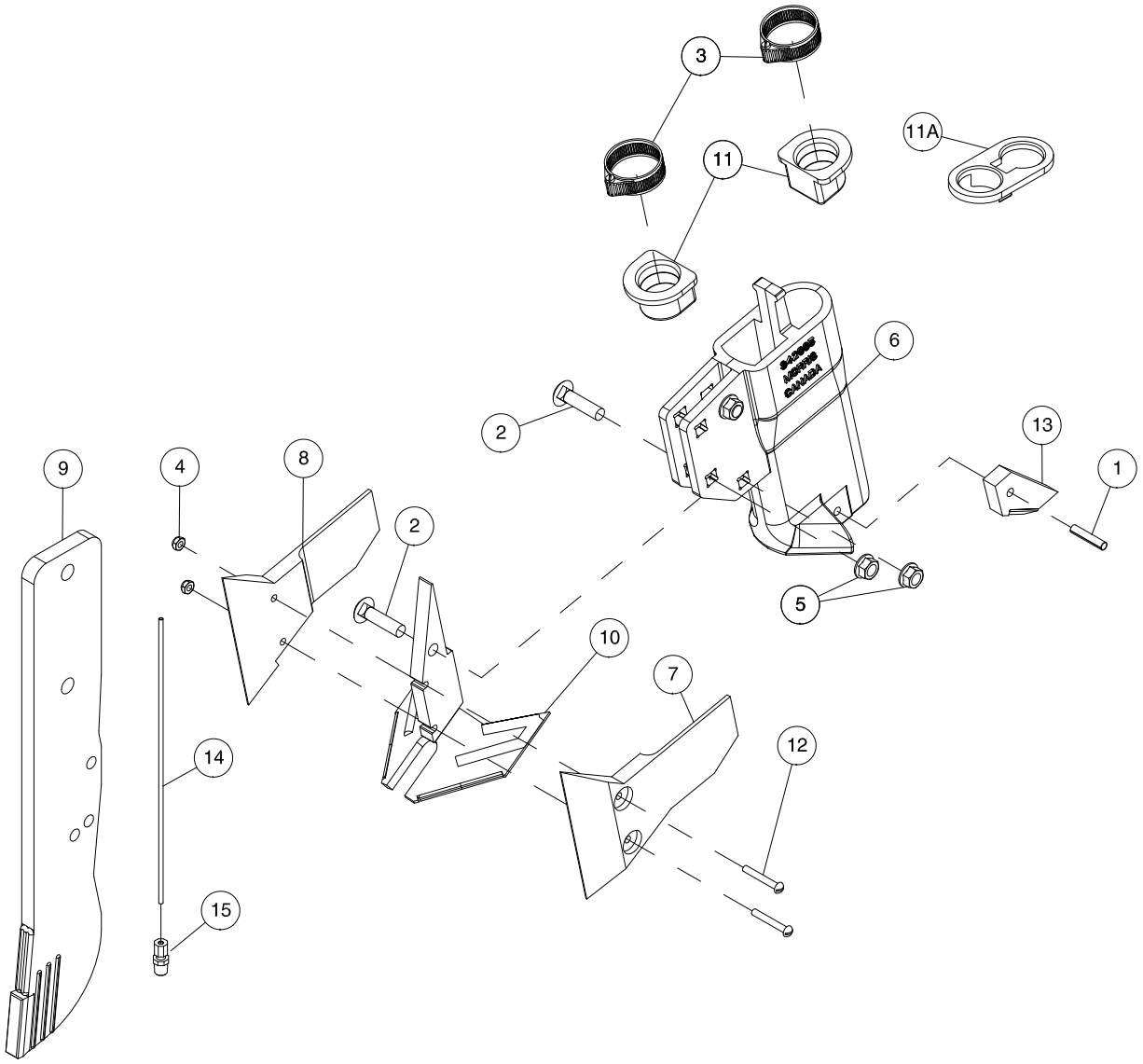

Item	Part No.	Description	Qty
1	D-5243	Roll Pin	1
2	D-5261	Carriage Bolt - 3/8 x 1-1/2 Lg	3
3	N11470	Hose Clamp	2
4	N37787	Nylon Insert Locknut - #10-24	2
5	S27987	Center Lock Flange Lock Nut - 3/8	3
6	S42965	Cast Double Shoot Boot	1
7	S45312	Mud Guard Option Left	1
8	S45313	Mud Guard Option Right	1
9	S72310	Forged Shank W/Carbide	1
10	S45470	Paired Row Shovel	1
11	S47076	Secondary Hose Grommet Option - 15/16 ID Hose - Prior to 2023	2
11A	S50245	Secondary Hose Grommet Option - 1.125 ID Hose	
12	S47128	Machine Screw - #10-24 x 1 3/8	2
13	S47980	Carbide Wear Tail	1
14	S48813	NH3 Injector Tube - 1/8 OD x 10 Lg T304 Stainless Tube	1
15	S48814	Compression Fitting - 1/8 Tube x 1/8 Male Pipe	1
	S46384	Kit - High Pressure Anhydrous (Includes Items 15 and 16)	

Seed Boot
Double Shoot - Side Band - Left

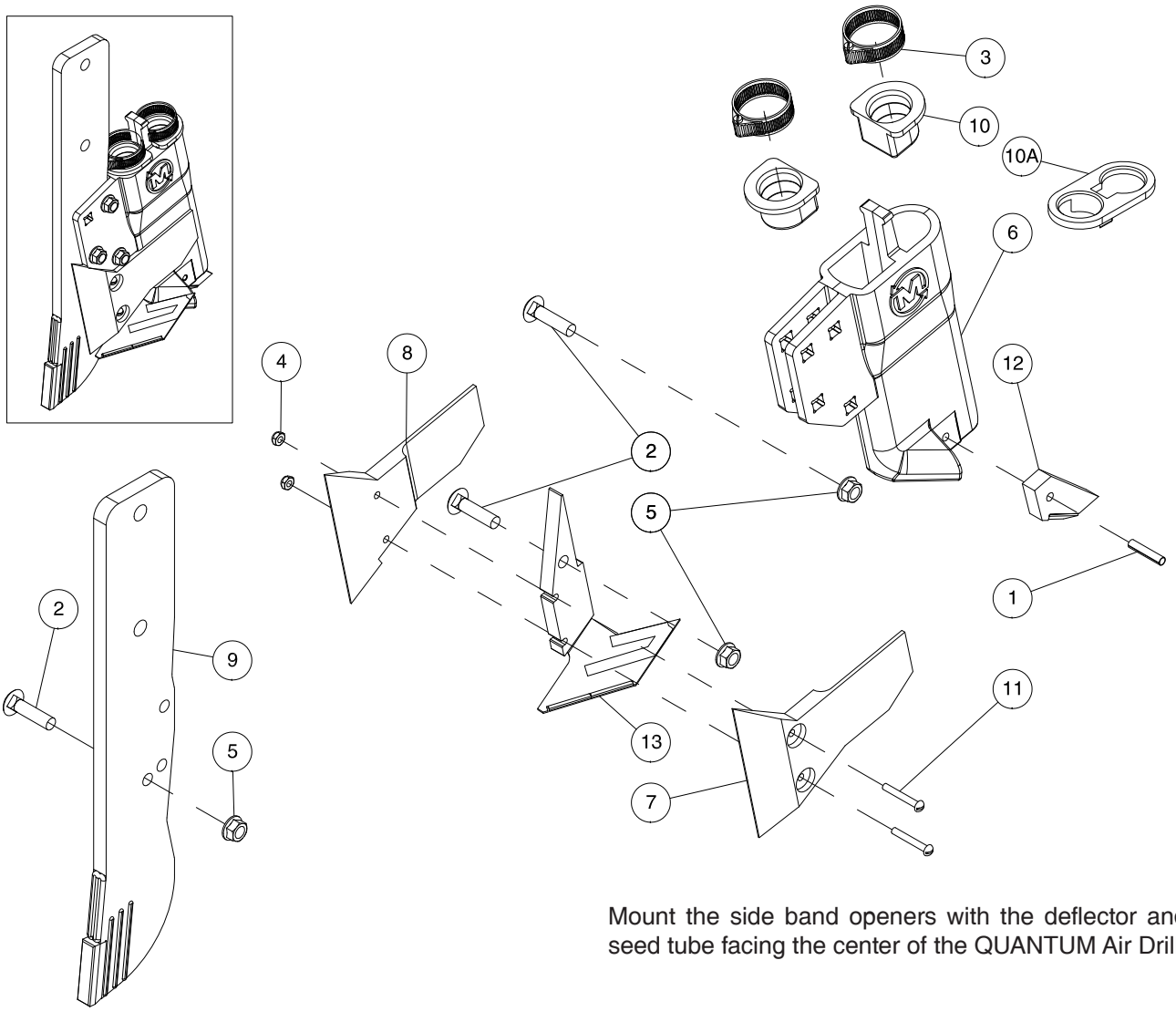

Mount the side band openers with the deflector and seed tube facing the center of the QUANTUM Air Drill.

Item	Part No.	Description	Qty
1	D-5243	Roll Pin	1
2	D-5261	Carriage Bolt - 3/8 x 1-1/2 Lg	3
3	N11470	Hose Clamp	2
4	N37787	Nylon Insert Locknut - #10-24	2
5	S27987	Center Lock Flange Lock Nut - 3/8	3
6	S44977	Cast Double Shoot Boot - Side Band - Left	1
6A	S51469	Cast Double Shoot Boot - Side Band - Left - Carbide	
7	S45312	Mud Guard Option Left	1
8	S45313	Mud Guard Option Right	1
9	S72310	Forged Shank	1
10	S47076	Secondary Hose Grommet Option - 15/16 ID Hose - Prior to 2023	2
10A	S50245	Secondary Hose Grommet Option - 1.125 ID Hose	
11	S47128	Machine Screw - #10-24 x 1-3/8	2
12	S47980	Carbide Wear Tail	1
13	S49536	Side Band Shovel	1
	S46181	Kit - Mud Guards (Includes Items 4, 7, 8, and 11)	

Seed Boot
Double Shoot - Side Band Boot - Right

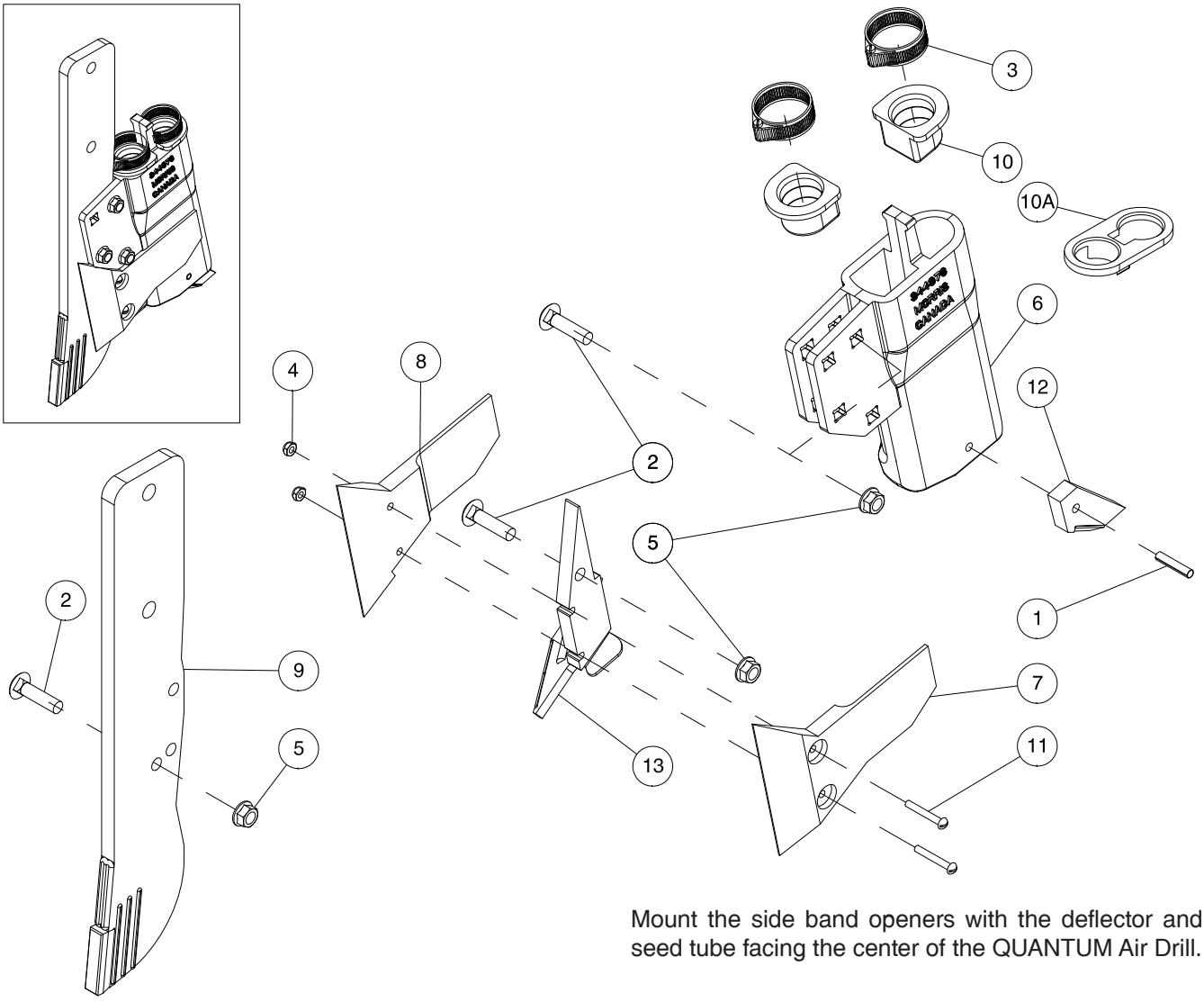

Mount the side band openers with the deflector and seed tube facing the center of the QUANTUM Air Drill.

Item	Part No.	Description	Qty
1	D-5243	Roll Pin - 1/4 x 1 1/4 Lg	1
2	D-5261	Carriage Bolt - 3/8 x 1-1/2 Lg	3
3	N11470	Hose Clamp	2
4	N37787	Nylon Insert Locknut - #10-24	2
5	S27987	Center Lock Flange Lock Nut - 3/8	3
6	S44976	Cast Double Shoot Boot - Side Band - Right	1
6A	S51470	Cast Double Shoot Boot - Side Band - Right - Carbide	
7	S45312	Mud Guard Option Left	1
8	S45313	Mud Guard Option Right	1
9	S72310	Forged Shank	1
10	S47076	Secondary Hose Grommet Option - 15/16 ID Hose - Prior to 2023	2
10A	S50245	Secondary Hose Grommet Option- 1.125 ID Hose	
11	S47128	Machine Screw - #10-24 x 1-3/8	2
12	S47980	Carbide Wear Tail	1
13	S49537	Side Band Shovel - Right	1
	S46181	Kit - Mud Guards (Includes Items 4, 7, 8, and 11)	

Notes

Section 4: Hydraulics

Section Contents

Wing Lift Hydraulics 4-2
- 40 ft - 12m 4-2
- 50 ft - 15m 4-4
- 60 ft and 70 ft - 18m and 21m 4-6
- 80 ft - 24m 4-8
- Wing Valve - 80 ft - 24m 4-10

Tow Behind Cross Tillage Kit 4-12
- 9 Series Cart 4-12
- 10 Series Cart - One Fan 4-14
- 10 Series Cart - Two Fans 4-16

3 Rank Opener Hydraulics 4-18
- 10 inch Spacing - 40 ft to 70 ft 4-18
- 250 mm Spacing - 12 m to 21 m 4-20
- 12 inch Spacing - 40 ft to 70 ft 4-22
- 300 mm Spacing - 12 m to 21 m 4-24
- 15 inch (380 mm) Spacing - 40 ft to 70 ft 4-26

Four Rank Hydraulic Option - 10 inch Spacing 4-28
- - 40 ft Model 4-28
- - 50 ft Model 4-30
- - 60 ft Model 4-32
- - 70 ft Model 4-34
- - 80 ft Model 4-36

Four Rank Hydraulic Option - 12 inch Spacing 4-38
- - 40 ft Model 4-38
- - 50 ft Model 4-40
- - 60 ft Model 4-42
- - 70 ft Model 4-44
- - 80 ft Model 4-46

Accumulator Hydraulic Option 4-48
- Option 1 - Single Large Accumulator 4-48
- Option 2 - Multiple Small Accumulators 4-50

Cylinder Seal Kits 4-52

Pressure Control 4-53
- JEM - Pressure Control System 4-53
- 9 Series Apollo - Lift and Pressure Control Kit - Prior to 2022 4-54
- 9 Series Apollo - Lift and Pressure Control Kit - 2022 to Present 4-56
- 10 Series Apollo - Lift and Pressure Control Kit 4-58

Wing Lift Valve Block 4-60

Opener Valve Block 4-61
- 2018-2019 4-61
- 2020 to present 4-62

Wing Lift Hydraulics
40 ft - 12m

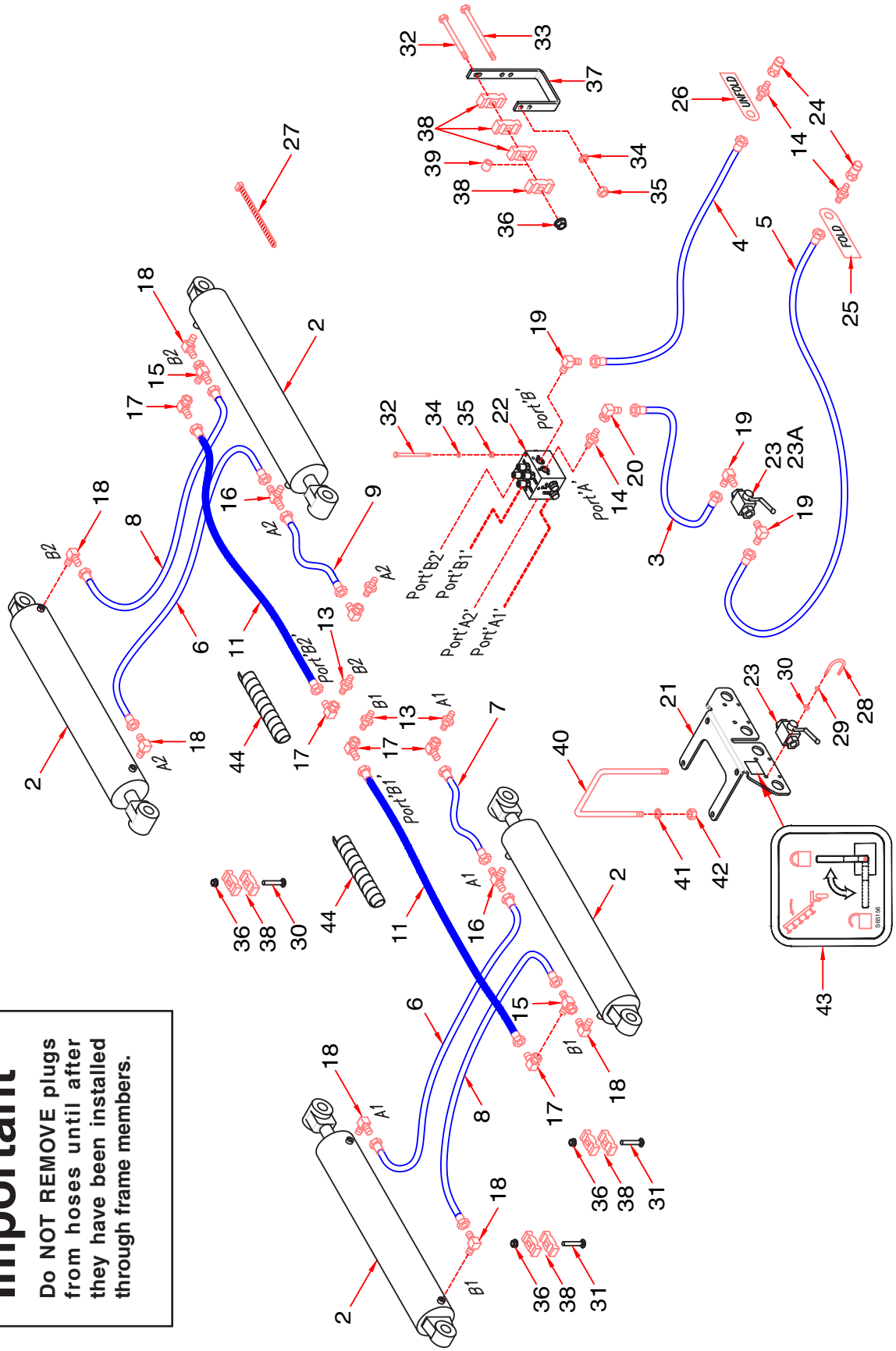

Important

Do NOT REMOVE plugs from hoses until after they have been installed through frame members.

Wing Lift Hydraulics - 40 ft - 12m

Item	Part No.	Description	Qty
1	* * * * *		
2	C64930	Cylinder - 5 x 36	4
	C64920	Cylinder - 6 x 36 - Prior to November 2018	
3	N53211	Hyd Hose - 1/2 x 120 Lg - 7/8-14 FJIC Ends	1
4	S39539	Hyd Hose - 1/2 x 330 Lg - 7/8-14 FJIC Ends	1
5	C29565	Hyd Hose - 1/2 x 360 Lg - 7/8-14 FJIC Ends	1
6	S65408	Hyd Hose - 3/8 x 96 Lg - #6 9/16-18 FJIC Ends	2
7	S65409	Hyd Hose - 3/8 x 108 Lg - 9/16-18 FJIC Ends	1
8	S65421	Hyd Hose - 3/8 x 132 Lg - #6 9/16-18 FJIC Ends	2
9	S65419	Hyd Hose - 3/8 x 120 Lg - #6 9/16-18 FJIC Ends	1
10	* * * * *		
11	S65398	Hyd Hose - 3/8 x 150 Lg - #6 9/16-18 FJIC Ends	2
12	* * * * *		
13	C15348	Connector - 3/4-16 MORB x 9/16-18 MJIC	4
14	C14840	Connector - 3/4-16 MORB x 7/8-14 MJIC	3
15	C-4403	Swivel Tee - (2) 9/16-18 MJIC x (1) 9/16-18 FJIC (MMF)	2
16	N31908	Swivel Tee - (2) 9/16-18 MJIC x (1) 9/16-18 MORB	2
17	S29967	90 Elbow - Swivel - 9/16-18 (#06) FJIC x 9/16-18 (#06) MJIC	6
18	N16143	90 Elbow - 9/16-18 (#06) MJIC x 9/16-18 (#06) MORB	6
19	C24585	90 Elbow - 7/8-14 MJIC x 3/4-16 MORB	3
20	K-5806	90 Elbow - 7/8-14 FJIC x 7/8-14 MJIC	1
21	S65129	Multi-Valve Mounting Plate	1
22	C53849	Manifold - Pressure Compensated Flow Control	1
23	N42880	Valve - 2 Way Ball	1
23A	N42881	Handle - Valve	1
24	N34443	Male Pioneer Tip - 3/4-16 ORB - Series B	2
25	S29960	Tag - Hose ID - Wing Lift - FOLD	1
26	S29961	Tag - Hose ID - Wing Lift - UNFOLD	1
27	D-4951	Nylon Tie Strap - 3/16 x 7 3/8	80
28	N34319	U-Bolt - 1/4 x 1 1/2 x 1 3/4 Lg	2
29	W-521	Lockwasher - 1/4	4
30	W-512	Hex Nut - 1/4	4
31	W14501	Carriage Bolt - 3/8 x 2 1/4 Lg	4
32	C-3918	Hex Bolt - 3/8 x 5 Lg	6
33	N19678	Hex Bolt - 3/8 x 7 Lg	4
34	W-523	Lockwasher - 3/8	6
35	W-514	Hex Nut - 3/8	6
36	S27987	Locknut - 3/8 Flanged Centre Lock	8
37	S65128	Oil Line Bracket	4
38	C-4698	Oil Line Clamp	24
39	N16257	Bushing - Spacer	4
40	H25628	U-Bolt - 1/2 x 6 x 9 3/8 Lg	2
41	W-525	Lockwasher - 1/2	4
42	W-516	Hex Nut - 1/2	4
43	S65156	Decal ISO - Wings Lock	1
44	N56957	Flex Hose Cover - 1 1/2 Dia x 48 Lg - Flexible Coil	2

Wing Lift Hydraulics
50 ft - 15m

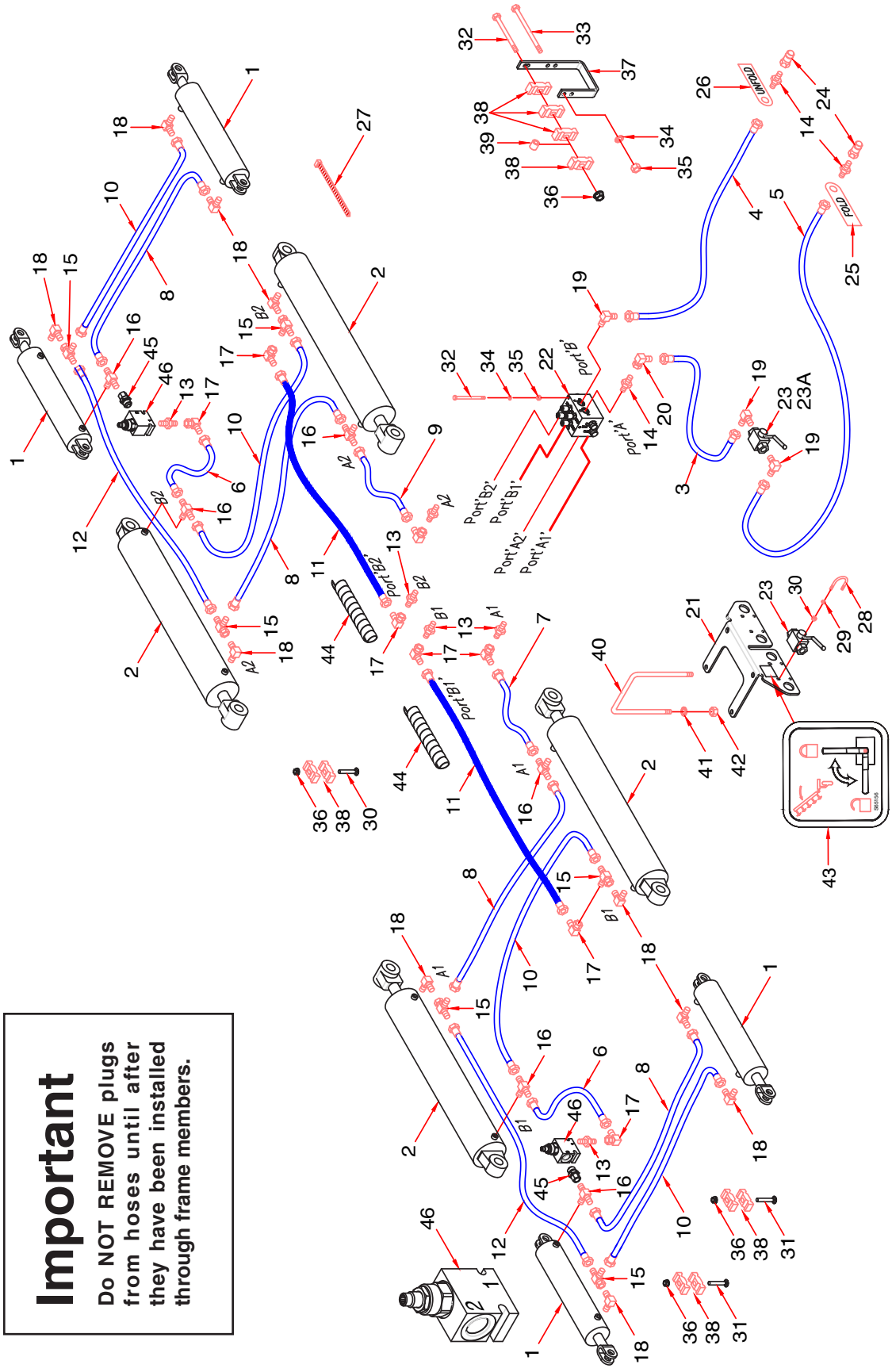

Important

Do NOT REMOVE plugs from hoses until after they have been installed through frame members.

Wing Lift Hydraulics - 50 ft - 15m

Item	Part No.	Description	Qty
1	C65366	Cylinder - 4 1/2 x 18 (50 ft)	4
2	C64930	Cylinder - 5 x 36	4
	C64920	Cylinder - 6 x 36 - Prior to November 2018	
3	N53211	Hyd Hose - 1/2 x 120 Lg - /7/8-14 FJIC Ends	1
4	S39539	Hyd Hose - 1/2 x 330 Lg - 7/8-14 FJIC Ends	1
5	C29565	Hyd Hose - 1/2 x 360 Lg - 7/8-14 FJIC Ends	1
6	S65397	Hyd Hose - 3/8 x 80 Lg - 9/16-18 FJIC Ends (50 ft)	2
7	S65409	Hyd Hose - 3/8 x 108 Lg - 9/16-18 FJIC Ends	1
8	S65408	Hyd Hose - 3/8 x 96 Lg - #6 9/16-18 FJIC Ends	4
9	S65419	Hyd Hose - 3/8 x 120 Lg - #6 9/16-18 FJIC Ends	1
10	S65421	Hyd Hose - 3/8 x 132 Lg - #6 9/16-18 FJIC Ends	4
11	S65398	Hyd Hose - 3/8 x 150 Lg - #6 9/16-18 FJIC Ends	2
12	S65411	Hyd Hose - 3/8 x 168 Lg - #6 9/16-18 FJIC Ends (50 ft)	2
13	**C15348**	**Connector - 3/4-16 MORB x 9/16-18 MJIC**	**6**
14	C14840	Connector - 3/4-16 MORB x 7/8-14 MJIC	3
15	C-4403	Swivel Tee - (2) 9/16-18 MJIC x (1) 9/16-18 FJIC (MMF)	6
16	N31908	Swivel Tee - (2) 9/16-18 MJIC x (1) 9/16-18 MORB	6
17	**S29967**	**90 Elbow - Swivel - 9/16-18 (#06) FJIC x 9/16-18 (#06) MJIC**	**8**
18	N16143	90 Elbow - 9/16-18 (#06) MJIC x 9/16-18 (#06) MORB	10
19	C24585	90 Elbow - 7/8-14 MJIC x 3/4-16 MORB	3
20	K-5806	90 Elbow - 7/8-14 FJIC x 7/8-14 MJIC	1
21	S65129	Multi-Valve Mounting Plate	1
22	C53849	Manifold - Pressure Compensated Flow Control	1
23	N42880	Valve - 2 Way Ball	1
23A	N42881	Handle - Valve	1
24	N34443	Male Pioneer Tip - 3/4-16 ORB - Series B	2
25	S29960	Tag - Hose ID - Wing Lift - FOLD	1
26	S29961	Tag - Hose ID - Wing Lift - UNFOLD	1
27	D-4951	Nylon Tie Strap - 3/16 x 7 3/8	80
28	N34319	U-Bolt - 1/4 x 1 1/2 x 1 3/4 Lg	2
29	W-521	Lockwasher - 1/4	4
30	W-512	Hex Nut - 1/4	4
31	W14501	Carriage Bolt - 3/8 x 2 1/4 Lg	8
32	C-3918	Hex Bolt - 3/8 x 5 Lg	6
33	N19678	Hex Bolt - 3/8 x 7 Lg	4
34	W-523	Lockwasher - 3/8	6
35	W-514	Hex Nut - 3/8	6
36	S27987	Locknut - 3/8 Flanged Centre Lock	12
37	S65128	Oil Line Bracket	4
38	C-4698	Oil Line Clamp	32
39	N16257	Bushing - Spacer	4
40	H25628	U-Bolt - 1/2 x 6 x 9 3/8 Lg	2
41	W-525	Lockwasher - 1/2	4
42	W-516	Hex Nut - 1/2	4
43	S65156	Decal ISO - Wings Lock	1
44	N56957	Flex Hose Cover - 1 1/2 Dia x 48 Lg - Flexible Coil	2
45	**S68920**	**Connector - 3/4-16 (#08) MORB x 9/16-18 (#06) FJIC**	**2**
46	**S68925**	**Valve - Flow Control**	**2**

Wing Lift Hydraulics
60 ft and 70 ft - 18m and 21m

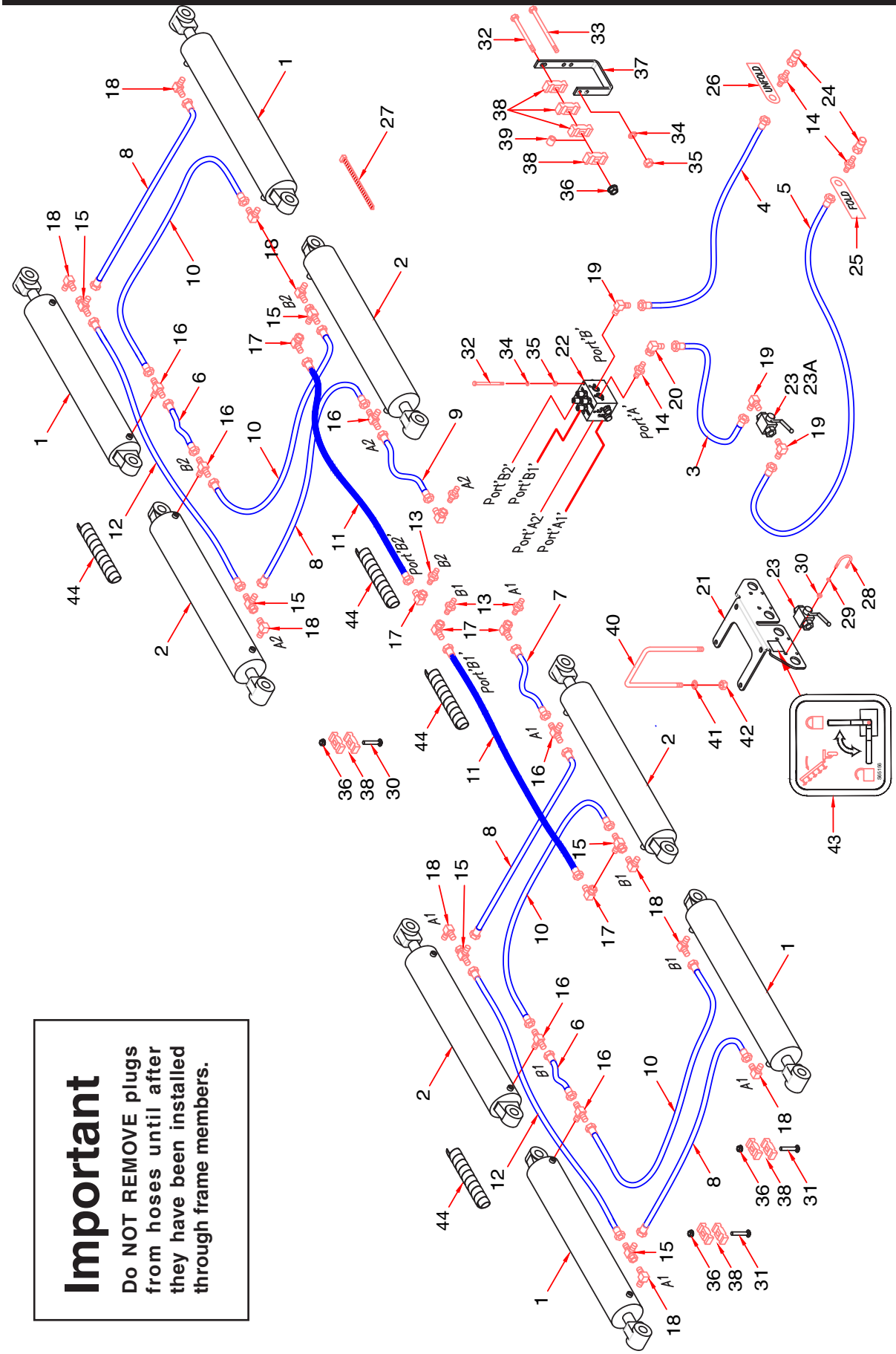

Important

Do NOT REMOVE plugs from hoses until after they have been installed through frame members.

Wing Lift Hydraulics - 60 ft and 70 ft - 18m and 21m

Item	Part No.	Description	Qty
1	C64930	Cylinder - 5 x 36 (60 ft & 70 ft)	4
2	C64920	Cylinder - 6 x 36	4
3	N53211	Hyd Hose - 1/2 x 120 Lg - /7/8-14 FJIC Ends	1
4	S39539	Hyd Hose - 1/2 x 330 Lg - 7/8-14 FJIC Ends	1
5	C29565	Hyd Hose - 1/2 x 360 Lg - 7/8-14 FJIC Ends	1
6	S44353	Hyd Hose - 3/8 x 48 Lg - #6 9/16-18 FJIC Ends (60 ft)	2
	S65407	Hyd Hose - 3/8 x 72 Lg - 9/16-18 FJIC Ends (70 ft)	2
7	S65409	Hyd Hose - 3/8 x 108 Lg - 9/16-18 FJIC Ends	1
8	S65408	Hyd Hose - 3/8 x 96 Lg - #6 9/16-18 FJIC Ends	4
9	S65419	Hyd Hose - 3/8 x 120 Lg - #6 9/16-18 FJIC Ends	1
10	S65421	Hyd Hose - 3/8 x 132 Lg - #6 9/16-18 FJIC Ends	4
11	S65398	Hyd Hose - 3/8 x 150 Lg - #6 9/16-18 FJIC Ends	2
12	S65420	Hyd Hose - 3/8 x 126 Lg - #6 9/16-18 FJIC Ends (60 ft)	2
	S65398	Hyd Hose - 3/8 x 150 Lg - #6 9/16-18 FJIC Ends (70 ft)	2
13	C15348	Connector - 3/4-16 MORB x 9/16-18 MJIC	4
14	C14840	Connector - 3/4-16 MORB x 7/8-14 MJIC	3
15	C-4403	Swivel Tee - (2) 9/16-18 MJIC x (1) 9/16-18 FJIC (MMF)	6
16	N31908	Swivel Tee - (2) 9/16-18 MJIC x (1) 9/16-18 MORB	6
17	S29967	90 Elbow - Swivel - 9/16-18 (#06) FJIC x 9/16-18 (#06) MJIC	6
18	N16143	90 Elbow - 9/16-18 (#06) MJIC x 9/16-18 (#06) MORB	10
19	C24585	90 Elbow - 7/8-14 MJIC x 3/4-16 MORB	3
20	K-5806	90 Elbow - 7/8-14 FJIC x 7/8-14 MJIC	1
21	S65129	Multi-Valve Mounting Plate	1
22	C53849	Manifold - Pressure Compensated Flow Control	1
23	N42880	Valve - 2 Way Ball	1
23A	N42881	Handle - Valve	1
24	N34443	Male Pioneer Tip - 3/4-16 ORB - Series B	2
25	S29960	Tag - Hose ID - Wing Lift - FOLD	1
26	S29961	Tag - Hose ID - Wing Lift - UNFOLD	1
27	D-4951	Nylon Tie Strap - 3/16 x 7 3/8	80
28	N34319	U-Bolt - 1/4 x 1 1/2 x 1 3/4 Lg	2
29	W-521	Lockwasher - 1/4	4
30	W-512	Hex Nut - 1/4	4
31	W14501	Carriage Bolt - 3/8 x 2 1/4 Lg	8
32	C-3918	Hex Bolt - 3/8 x 5 Lg	6
33	N19678	Hex Bolt - 3/8 x 7 Lg	4
34	W-523	Lockwasher - 3/8	6
35	W-514	Hex Nut - 3/8	6
36	S27987	Locknut - 3/8 Flanged Centre Lock	12
37	S65128	Oil Line Bracket	4
38	C-4698	Oil Line Clamp	32
39	N16257	Bushing - Spacer	4
40	H25628	U-Bolt - 1/2 x 6 x 9 3/8 Lg	2
41	W-525	Lockwasher - 1/2	4
42	W-516	Hex Nut - 1/2	4
43	S65156	Decal ISO - Wings Lock	1
44	N56957	Flex Hose Cover - 1 1/2 Dia x 48 Lg - Flexible Coil	4

Wing Lift Hydraulics
80 ft - 24m

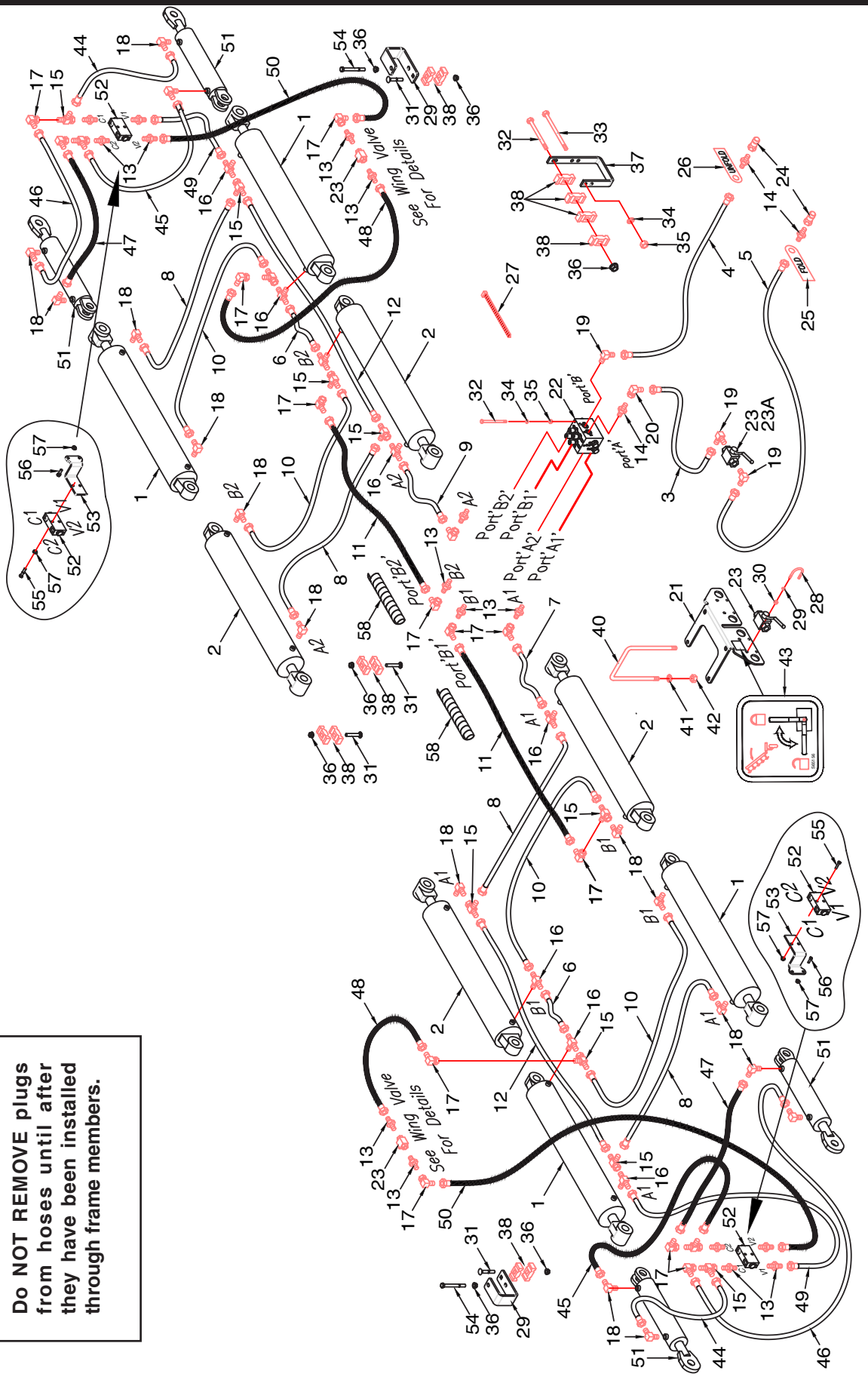

Important

Do NOT REMOVE plugs from hoses until after they have been installed through frame members.

Wing Lift Hydraulics - 80 ft - 24m

Item	Part No.	Description	Qty
1	C64930	Cylinder - 5 x 36	4
2	C64920	Cylinder - 6 x 36	4
3	N53211	Hyd Hose - 1/2 x 120 Lg - #10 7/8-14 FJIC Ends	1
4	S39539	Hyd Hose - 1/2 x 330 Lg - #10 7/8-14 FJIC Ends	1
5	C29565	Hyd Hose - 1/2 x 360 Lg - #10 7/8-14 FJIC Ends	1
6	S44353	Hyd Hose - 3/8 x 48 Lg - #6 9/16-18 FJIC Ends	2
7	S73160	Hyd Hose - 3/8 x 145 Lg - #6 9/16-18 FJIC Ends	1
8	S65408	Hyd Hose - 3/8 x 96 Lg - #6 9/16-18 FJIC Ends	4
9	S73161	Hyd Hose - 3/8 x 157 Lg - #6 9/16-18 FJIC Ends	1
10	S65421	Hyd Hose - 3/8 x 132 Lg - #6 9/16-18 FJIC Ends	4
11	S73159	Hyd Hose - 3/8 x 185 Lg - #6 9/16-18 FJIC Ends	2
12	S65420	Hyd Hose - 3/8 x 126 Lg - #6 9/16-18 FJIC Ends	2
13	C15348	Connector - 3/4-16 MORB x #6 9/16-18 MJIC	16
14	C14840	Connector - #8 3/4-16 MORB x #10 7/8-14 MJIC	3
15	C-4403	Swivel Tee - (2) 9/16-18 MJIC x (1) 9/16-18 FJIC (MMF)	12
16	N31908	Swivel Tee - (2) 9/16-18 MJIC x (1) 9/16-18 MORB	8
17	S29967	90 Elbow - Swivel - 9/16-18 (#06) FJIC x 9/16-18 (#06) MJIC	14
18	N16143	90 Elbow - 9/16-18 (#06) MJIC x 9/16-18 (#06) MORB	16
19	C24585	90 Elbow - 7/8-14 MJIC x 3/4-16 MORB	3
20	K-5806	90 Elbow - 7/8-14 FJIC x 7/8-14 MJIC	1
21	S65129	Multi-Valve Mounting Plate	1
22	C53849	Manifold - Pressure Compensated Flow Control	1
23	N42880	Valve - 2 Way Ball	3
23A	N42881	Handle - Valve	1
24	N34443	Male Pioneer Tip - 3/4-16 ORB - Series B	2
25	S29960	Tag - Hose ID - Wing Lift - FOLD	1
26	S29961	Tag - Hose ID - Wing Lift - UNFOLD	1
27	D-4951	Nylon Tie Strap - 3/16 x 7 3/8	80
28	N34319	U-Bolt - 1/4 x 1 1/2 x 1 3/4 Lg	2
29	S72949	Oil Line Bracket	2
30	W-512	Hex Nut - 1/4	4
31	W14501	Carriage Bolt - 3/8 x 2 1/4 Lg	14
32	C-3918	Hex Bolt - 3/8 x 5 Lg	6
33	N19678	Hex Bolt - 3/8 x 7 Lg	4
34	W-523	Lockwasher - 3/8	6
35	W-514	Hex Nut - 3/8	6
36	S27987	Locknut - 3/8 Flanged Centre Lock	18
37	S65128	Oil Line Bracket	4
38	C-4698	Oil Line Clamp	32
39	N16257	Bushing - Spacer	4
40	H25628	U-Bolt - 1/2 x 6 x 9 3/8 Lg	2
41	W-525	Lockwasher - 1/2	4
42	W-516	Hex Nut - 1/2	4
43	S65156	Decal ISO - Wings Lock	1
44	S73152	Hyd Hose - 3/8 x 26 Lg - #6 9/16-18 FJIC Ends	2
45	S73153	Hyd Hose - 3/8 x 18 Lg - #6 9/16-18 FJIC Ends	2
46	S73154	Hyd Hose - 3/8 x 98 Lg - #6 9/16-18 FJIC Ends	2
47	S73155	Hyd Hose - 3/8 x 94 Lg - #6 9/16-18 FJIC Ends	2
48	S73156	Hyd Hose - 3/8 x 32 Lg - #6 9/16-18 FJIC Ends	2
49	S73157	Hyd Hose - 3/8 x 122 Lg - #6 9/16-18 FJIC Ends	2
50	S73158	Hyd Hose - 3/8 x 130 Lg - #6 9/16-18 FJIC Ends	2
51	C72344	Cylinder - 4 x 14	4
52	K68627	Valve Block - Dual Pilot Check	2
53	S72948	Valve Mount	2
54	W-481	Hex Head Bolt - 3/8 x 3 1/2 Lg	2
55	W-478	Hex Bolt - 3/8 x 2 Lg	4
56	W-187	Hex Bolt - 3/8 x 1 1/4 Lg	4
57	D-5279	Locknut - 3/8 Flanged	8
58	N56957	Flex Hose Cover - 1 1/2 Dia x 48 Lg - Flexible Coil	2

Wing Lift Hydraulics
Wing Valve - 80 ft - 24m

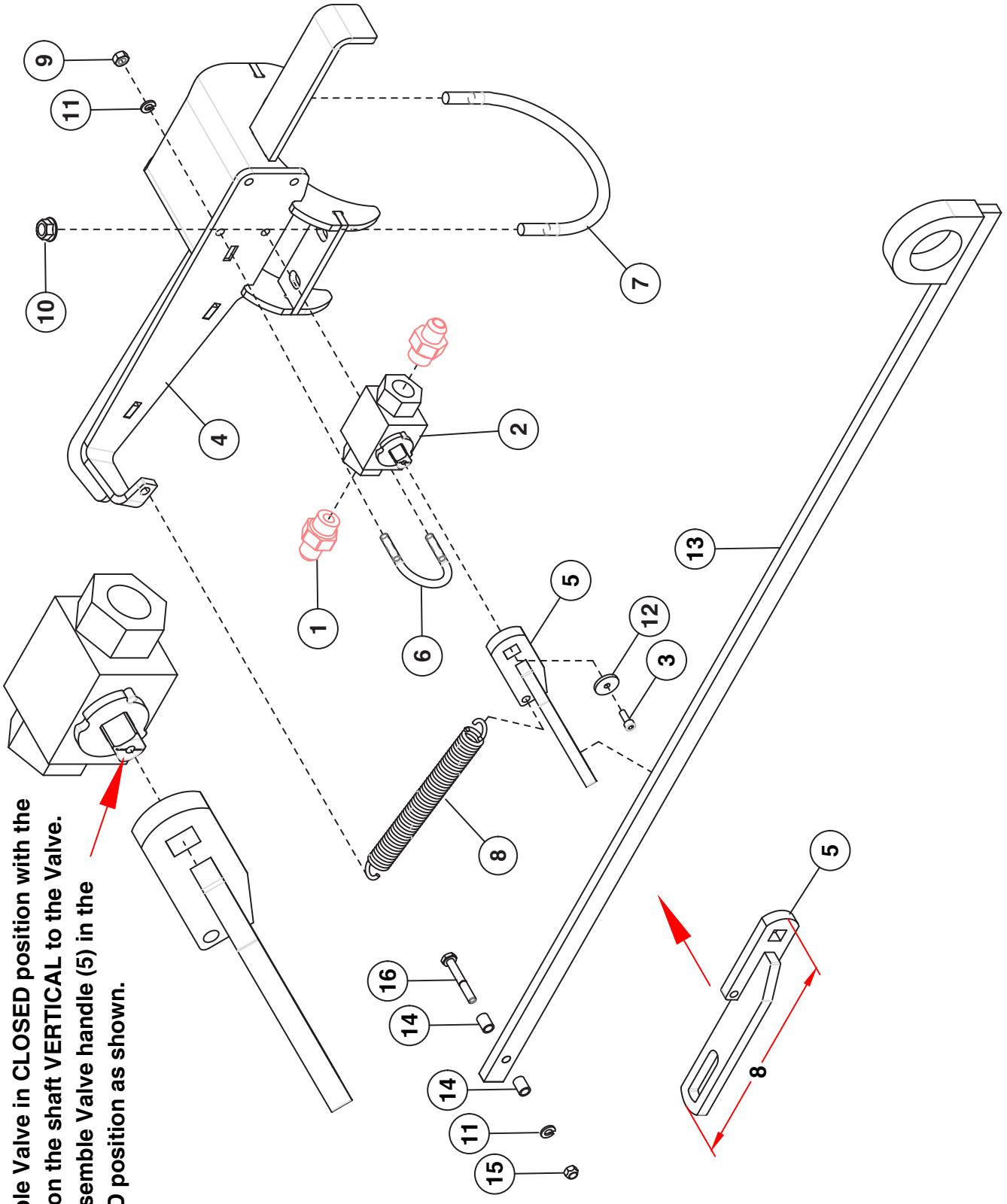

Note: Assemble Valve in CLOSED position with the groove on the shaft VERTICAL to the Valve. Also assemble Valve handle (5) in the CLOSED position as shown.

Wing Lift Hydraulics
Wing Valve - 80 ft - 24m

Item	Part No.	Description	Qty
1	C15348	Connector - 3/4-16 MORB x 9/16-18 MJIC	2
2	N42880	Lock Valve	1
3	S39548	Socket Head Capscrew - #10 x 1/2 Lg	1
4	S73105	Bracket - Shut Off Valve	1
5	S72770	Handle - Valve	1
6	N34319	U-Bolt - 1/4 x 1 1/2 x 1 3/4 Lg	2
7	S47597	U-Bolt - 3/8 x 5 1/2 Dia x 5 1/8 Lg	2
8	D-5054	Spring	1
9	W-512	Hex Nut - 1/4	4
10	D-5279	Lock Nut - 3/8	4
11	W-521	Lockwasher - 1/4	5
12	S39549	Washer - 3/16 ID x 13/16 OD x 12 Ga	1
13	S72735	Actuatorl Rod - 44 7/8 Lg .. (42 3/8 C-C Distance)	1
14	S72946	Spacer - 0.277 ID x 3/8 OD x 1/2 Lg	2
15	N22778	Lock Nut - 1/4 Nylon Insert	1
16	C-1471	Hex Bolt - 1/4 x 1 3/4 Lg	1

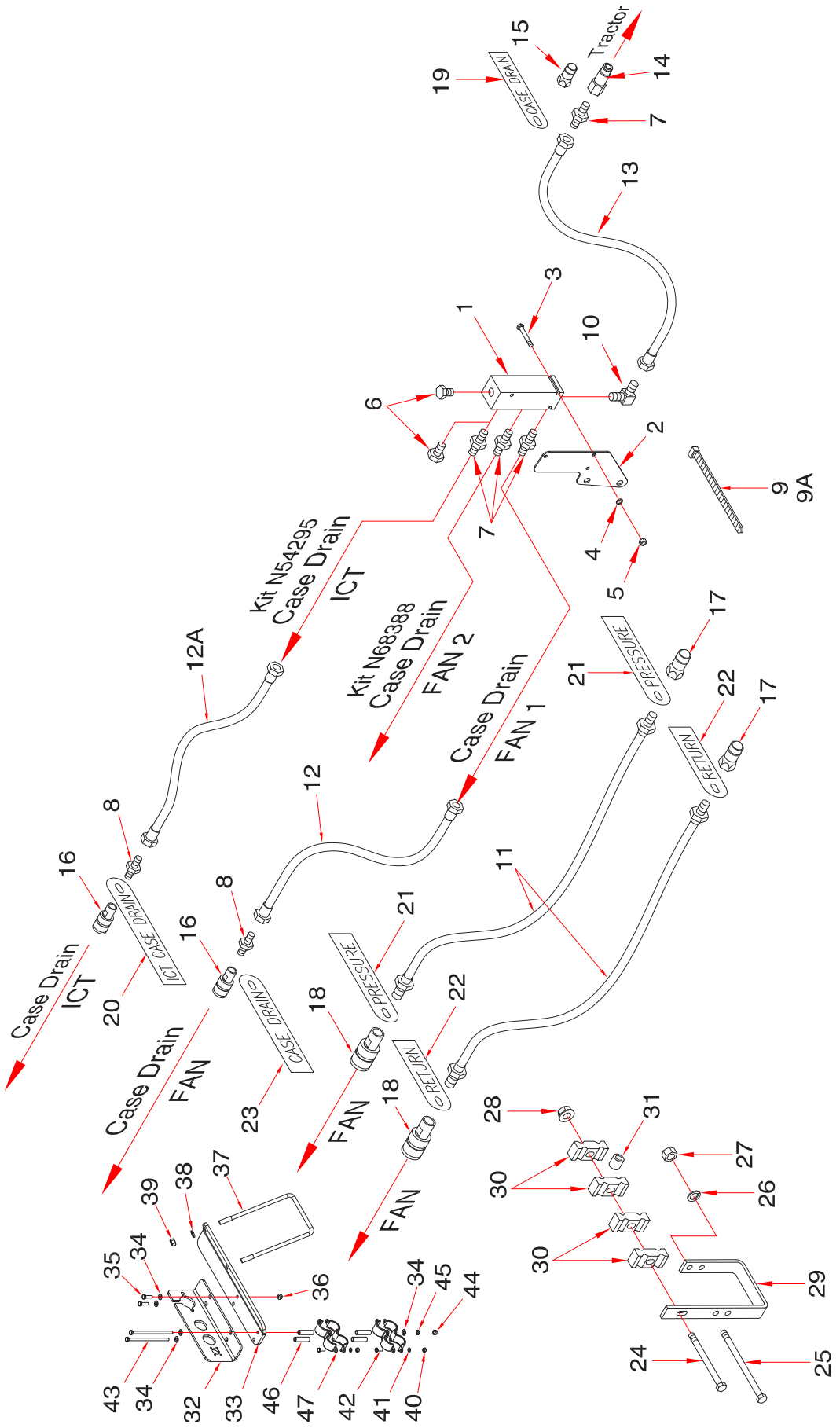
Tractor
CASE DRAIN
PRESSURE
RETURN
ICT CASE DRAIN
Kit N54295
Case Drain
ICT
Kit N68388
Case Drain
FAN 2
Case Drain
FAN 1
Case Drain
ICT
Case Drain
FAN
FAN
FAN
9
9A
12A

Tow Behind Cross Tillage Kit - 9 Series Cart			
Item	**Part No.**	**Description**	**Qty**
1	N58670	Case Drain Header	1
2	N58671	Plate - Case Drain Header Mount	1
3	C15319	Hex Bolt - 1/4 x 2 1/2 Lg	3
4	W-521	Lockwasher - 1/4	3
5	W-512	Hex Nut - 1/4	3
6	C28505	Plug - 3/4-16 MORB - Used on Ports not in use on Case Drain Header	3
7	C14840	Connector - 3/4-16 MORB x 7/8-14 MJIC	4
8	N34505	Connector - Swivel - 7/8-14 MORB x 7/8-14 MJIC	1
9	D-4951	Nylon Tie Strap - 3/16 x 7 3/8 Lg	6
9A	D-4838	Nylon Tie Strap - 5/16 x 14 1/2 Lg	10
10	N34646	90 Elbow - 7/8-14 MJIC x 1 1/16-12 MORB	1
11	**N68395**	**Hyd Hose - 3/4 x 480 Lg w/1 1/16-12 MORB**	**2**
12	**N68390**	**Hyd Hose - 3/8 x 408 Lg w/7/8-14 FJIC x 7/8-14 FJIC Swivel End**	**1**
12A	N50088	Hyd Hose - 3/8 x 396 Lg w/7/8-14 FJIC x 7/8-14 FJIC (ICT Case Drain)	1
13	F-4565	Hyd Hose - 1/2 x 60 Lg w/7/8-14 FJIC	1
14	K50834	3/8 Flat Face Tip - 3/4-16 FORB	1
15	N34443	1/2 Male Pioneer Tip - 3/4-16 FORB - Series B	1
16	N34488	1/2 Pioneer Coupler - 7/8-14 FORB - Series B	1
17	N37914	3/4 Male Tip - 1 1/16-12 FORB - Series B	2
18	N37915	3/4 Female Coupler - 1 1/16-12 FORB - Series B	2
19	S44468	Tag - Hose ID - Reducing Valve - CASE DRAIN	1
20	N58343	Tag - Hose ID - ICT - CASE DRAIN	1
21	N34576	Tag - Hose ID - Air Tank - Fan/Auger - PRESSURE	2
21A	N58340	Tag - Hose ID - Air Tank - **Fan 2** - PRESSURE	2
22	N34577	Tag - Hose ID - Air Tank - Fan/Auger - RETURN	2
22A	N58341	Tag - Hose ID - Air Tank - **Fan 2** - RETURN	2
23	N34578	Tag - Hose ID - Air Tank - Fan/Auger - CASE DRAIN	2
23A	N58342	Tag - Hose ID - Air Tank - **Fan 2** - CASE DRAIN	2
24	C-3918	Hex Bolt - 3/8 x 5 Lg	6
25	N19678	Hex Bolt - 3/8 x 7 Lg	6
26	W-523	Lockwasher - 3/8	6
27	W-514	Hex Nut - 3/8	6
28	S27987	Locknut - 3/8 Flanged Centre Lock	6
29	S65128	Oil Line Bracket	6
30	C-4698	Oil Line Clamp	24
31	N16257	Bushing - Spacer	6
32	N64747	Bracket - Electrical Connector - Tow Behind	1
33	S65673	Bracket - Mounting - Tow Behind	1
34	D-5488	Washer - 11/32 ID x 11/16 OD x 16 GA	6
35	W-472	Hex Bolt - 5/16 x 1 1/4 Lg	2
36	D-5278	Lock Nut - 5/16 Flange	2
37	H25628	U-Bolt - 1/2 x 6 1/16 x 9 3/8 UL - 40ft-70 ft	1
37A	S73828	U-Bolt - 1/2 x 6 1/16 x 7 3/8 UL - 80 ft	1
38	W-525	Lockwasher - 1/2	2
39	W-516	Hex Nut - 1/2	2
40	W-512	Hex Nut - 1/4 - Tow Behind	4
41	W-521	Lockwasher - 1/4 - Tow Behind	4
42	W-469	Hex Bolt - 1/4 X 3/4 Lg - Tow Behind	4
43	S13337	Hex Bolt - 5/16 x 6 Lg - Tow Behind	2
44	W-513	Hex Nut - 5/16 - Tow Behind	2
45	W-522	Lockwasher - 5/16 - Tow Behind	2
46	N19458	Spacer - 0.364 ID x 0.540 OD x 2 Lg	4
47	N16608	Pioneer End Clamp - Tow Behind	4
	N68388	Kit: Tow Behind Hydraulic Extension - QUANTUM **(Whole Goods Only)** - (Includes Items 8, 9, 9A, 11, 12, 13, 14, 16, 17, 18, 40 to 47)	
	N54295	Hyd Hose ICT Extension Kit: Quantum - Tow Behind ICT only **(Whole Goods Only)** - (Includes Items 8,12A,16, 20)	
	S65735	Kit: 40ft-70ft Hyd/Elec Bracket **(Whole Goods Only)** - (Includes Items 24-36, 37, 38, 39)	
	S73874	Kit: 80ft Hyd/Elec Bracket **(Whole Goods Only)** - (Includes Items 24-36, 37A, 38, 39)	

Tow Behind Cross Tillage Kit
10 Series Cart - One Fan

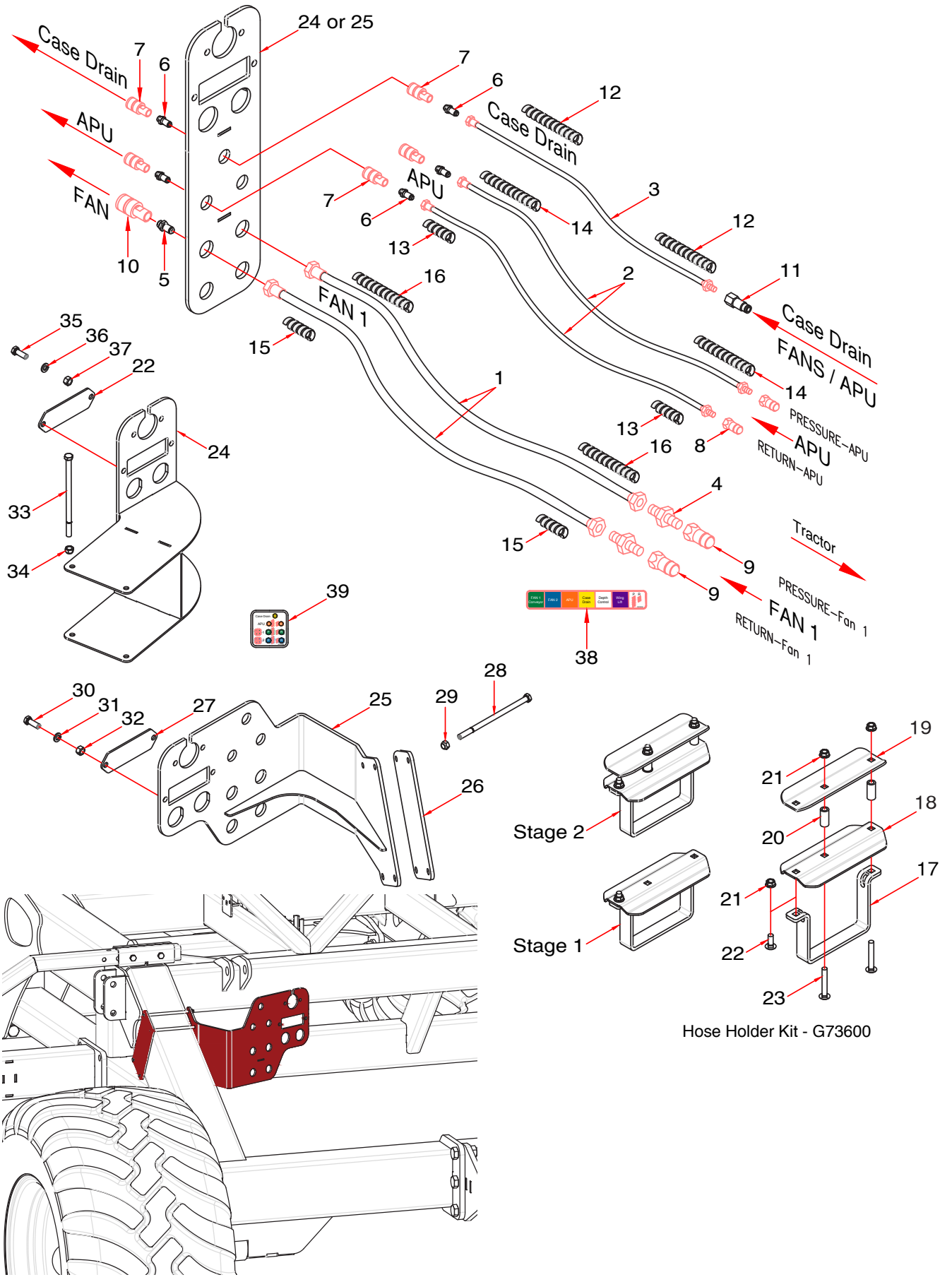

Hose Holder Kit - G73600

Tow Behind Cross Tillage Kit - 10 Series Cart - One Fan

Item	Part No.	Description	Qty
	N73738	**KIT -Hydraulic Hoses - Cross Tillage** - (Includes Items Below) Whole Goods Only	
1	N73733	Hyd Hose - 1 x 480 Lg - 1 1/16-12 FJIC (#12)	2
2	N73748	Hyd Hose - 1/2 x 480 Lg - 7/8-14 FJIC (#10) x 7/8-14 MORB (#10)	2
3	N73749	Hyd Hose - 1/2 x 480 Lg - 7/8-14 FJIC (#10) x 3/4 -16 MORB (#08)	1
	G73625	**Hyd Fittings - Single Fan** - (Includes Items Below) Whole Goods Only	
4	N15990	Connector - 1 1/16-12 MJIC (#12) x 1 1/16-12 MORB (#12)	2
5	N69768	Bulk Head Union - 1 1/16”-12 MJIC (#12) X 1 1/16”-12 MORB (#12)	2
6	N69804	Bulk Head Union - 7/8-14 MJIC (#10) x 7/8-14 MORB (#10)	3
	G73626	**PBAG - Cross Tillage - 10S - Single Fan** - (Includes Items Below) Whole Goods Only	
7	N34488	1/2 Female Pioneer Coupler - 7/8-14 FORB (#10) - Series B	3
	N75611	1/2 Female Pioneer Coupler - 7/8-14 FORB (#10) - Series A	
8	N34498	1/2 Male Pioneer Tip - 7/8-14 FORB (#10) - Series B	2
	N75610	1/2 Male Pioneer Tip - 7/8-14 FORB (#10) - Series A	
9	N37914	3/4 Male Pioneer Tip - 1 1/16-12 FORB (#12) - Series B	2
	N75612	3/4 Male Pioneer Tip - 1 1/16-12 FORB (#12) - Series A	
10	N37915	3/4 Female Pioneer Coupler - 1 1/16-12 FORB (#12) - Series B	2
	N75613	3/4 Female Pioneer Coupler - 1 1/16-12 FORB (#12) - Series A	
11	K73230	3/8 Flat Face Tip - 3/4-16 FORB (#08) (FF491-3-8-CV) - Low Pressure Release	1
12	N74321	Hose Wrap - YELLOW - 11” - Case Drain	2
13	N74326	Hose Wrap - ORANGE - 5” - Return - APU	2
14	N74327	Hose Wrap - ORANGE - 11” - Pressure - APU	2
15	N74330	Hose Wrap - GREEN - 5” - Return - Fan 1 / Conveyor	2
16	N74331	Hose Wrap - GREEN - 11” - Pressure - Fan 1 / Conveyor	2
	G73600	**Hose Holder Kit** - (Includes Items Below) Whole Goods Only	
17	S73602	Hitch Hose Holder - Clamp	4
18	S73603	Hitch Hose Holder - Bottom Plate	4
19	S73604	Hitch Hose Holder - Top Plate	4
20	N69879	Bushing - 0.385 ID x 0.625 OD x 1 3/8 Lg	8
	G73601	Hitch Hose Holder Hardware - (Includes Items Below) Whole Goods Only	1
21	S27987	Flange Lock Nut - 3/8 W/Center Lock	12
22	P7C616	Carriage Bolt - 3/8 x 1 Lg	4
23	S28159	Carriage Bolt - 3/8 x 2 1/2 Lg	8
24	S69855	Bracket - Bulk Head - Quantum 80 ft Only	1
25	S73724	Bracket - Bulk Head - Quantum 40 ft to 70 ft	1
26	S73732	Clamp Plate - Bulk Head - Quantum 40 ft to 70 ft	1
27	S69859	Cover - Expansion Slot	1
	G73746	**PBAG:STD QTM R-BULKHEAD HDW** - (Includes Items Below) Whole Goods Only	
28	N19678	Hex Bolt - 3/8 x 7 Lg	4
29	M-3388	Locknut - 3/8	4
30	W-475	Hex Bolt -3/8 x 1 Lg	4
31	W-523	Lock Washer - 3/8	4
32	W-514	Nut - 3/8	4
	G73747	**PBAG:WIDE QTM R-BULKHEAD HDW** - (Includes Items Below) Whole Goods Only	
33	N19678	Hex Bolt - 3/8 x 7 Lg	2
34	M-3388	Locknut - 3/8	2
35	W-475	Hex Bolt -3/8 x 1 Lg	4
36	W-523	Lock Washer - 3/8	4
37	W-514	Nut - 3/8	4
		Order Kits Through Whole Goods Only	
	N73796	KIT:CROSS-TILL STD Q+10S 1FAN - Quantum 40 ft to 70 ft (Includes Items 1-23 and 25-32)	
	N73798	KIT:CROSS-TILL WIDE Q+10S 1FAN - Quantum 80 ft Only (Includes Items 1-24, 27 and 33-37)	
38	N74334	Decal - Hose Wrap Identification (Locate on Drill Hitch)	1
39	N74998	Decal - Hose Identification - Bulkhead (Locate on Bulkhead)	1

Tow Behind Cross Tillage Kit
10 Series Cart - Two Fans

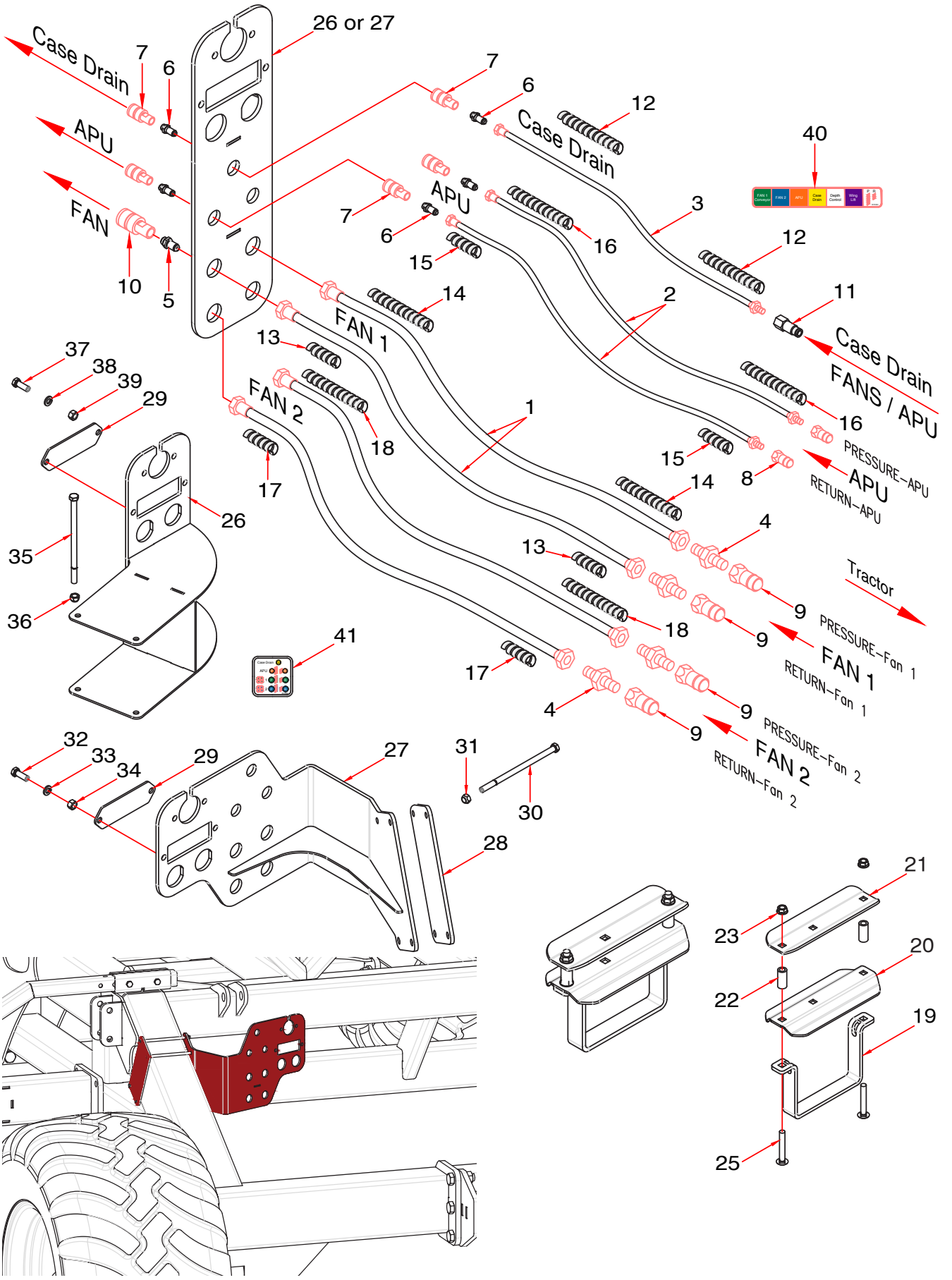

Tow Behind Cross Tillage Kit - 10 Series Cart - Two Fans

Item	Part No.	Description	Qty
	N73739	**KIT:Cross Tillage STD QTM 2 Fans** - (Includes Items Below) Whole Goods Only	
1	N73733	Hyd Hose - 1 x 480 Lg - 1 1/16-12 FJIC (#12)	4
2	N73748	Hyd Hose - 1/2 x 480 Lg - 7/8-14 FJIC (#10) x 7/8-14 MORB (#10)	2
3	N73749	Hyd Hose - 1/2 x 480 Lg - 7/8-14 FJIC (#10) x 3/4 -16 MORB (#08)	1
	N69801	**KIT:Hyd Fitting - Cross Tillage** - (Includes Items Below) Whole Goods Only	
4	N15990	Connector - 1 1/16-12 MJIC (#12) x 1 1/16-12 MORB (#12)	4
5	N69768	Bulk Head Union - 1 1/16”-12 MJIC (#12) X 1 1/16”-12 MORB (#12)	4
6	N69804	Bulk Head Union - 7/8-14 MJIC (#10) x 7/8-14 MORB (#10)	3
	G69903	**PBAG - Cross Tillage - 10S** - (Includes Items Below) Whole Goods Only	
7	N34488	1/2 Female Pioneer Coupler - 7/8-14 FORB (#10) - Series B	3
	N75611	1/2 Female Pioneer Coupler - 7/8-14 FORB (#10) - Series A	
8	N34498	1/2 Male Pioneer Tip - 7/8-14 FORB (#10) - Series B	2
	N75610	1/2 Male Pioneer Tip - 7/8-14 FORB (#10) - Series A	
9	N37914	3/4 Male Pioneer Tip - 1 1/16-12 FORB (#12) - Series B	4
	N75612	3/4 Male Pioneer Tip - 1 1/16-12 FORB (#12) - Series A	
10	N37915	3/4 Female Pioneer Coupler - 1 1/16-12 FORB (#12) - Series B	4
	N75613	3/4 Female Pioneer Coupler - 1 1/16-12 FORB (#12) - Series A	
11	K73230	3/8 Flat Face Tip - 3/4-16 FORB (#08) (FF491-3-8-CV) - Low Pressure Release	1
12	N74321	Hose Wrap - YELLOW - 11” - Case Drain	2
13	N74330	Hose Wrap - GREEN - 5” - Return - Fan 1 / Conveyor	2
14	N74331	Hose Wrap - GREEN - 11” - Pressure - Fan 1 / Conveyor	2
15	N74326	Hose Wrap - ORANGE - 5” - Return - APU	2
16	N74327	Hose Wrap - ORANGE - 11” - Pressure - APU	2
17	N74324	Hose Wrap - BLUE - 5” - Return - Fan 2	2
18	N74325	Hose Wrap - BLUE - 11” - Pressure - Fan 2	2
	G73600	**Hose Holder Kit** - (Includes Items Below) Whole Goods Only	
19	S73602	Hitch Hose Holder - Clamp	4
20	S73603	Hitch Hose Holder - Bottom Plate	4
21	S73604	Hitch Hose Holder - Top Plate	4
22	N69879	Bushing - 0.385 ID x 0.625 OD x 1 3/8 Lg	8
	G73601	**Hitch Hose Holder Hardware** - (Includes Items Below) Whole Goods Only	**1**
23	S27987	Flange Lock Nut - 3/8 W/Center Lock	12
24	P7C616	Carriage Bolt - 3/8 x 1 Lg - **(Not Used)**	4
25	S28159	Carriage Bolt - 3/8 x 2 1/2 Lg	8
26	S69855	Bracket - Bulk Head - Quantum 80 ft Only	1
27	S73724	Bracket - Bulk Head - Quantum 40 ft to 70 ft	1
28	S73732	Clamp Plate - Bulk Head - Quantum 40 ft to 70 ft	1
29	S69859	Cover - Expansion Slot	1
	G73746	**PBAG:STD QTM R-BULKHEAD HDW** - (Includes Items Below) Whole Goods Only	
30	N19678	Hex Bolt - 3/8 x 7 Lg	4
31	M-3388	Locknut - 3/8	4
32	W-475	Hex Bolt -3/8 x 1 Lg	4
33	W-523	Lock Washer - 3/8	4
34	W-514	Nut - 3/8	4
	G73747	**PBAG:WIDE QTM R-BULKHEAD HDW** - (Includes Items Below) Whole Goods Only	
35	N19678	Hex Bolt - 3/8 x 7 Lg	2
36	M-3388	Locknut - 3/8	2
37	W-475	Hex Bolt -3/8 x 1 Lg	4
38	W-523	Lock Washer - 3/8	4
39	W-514	Nut - 3/8	4
		Order Kits Through Whole Goods Only	
	N73797	KIT:CROSS-TILL STD Q+10S 2FAN - Quantum 40 ft to 70 ft (Includes Items 1-25 and 27-34)	
	N73799	KIT:CROSS-TILL WIDE Q+10S 2FAN - Quantum 80 ft Only (Includes Items 1-26, 29 and 35-39)	
40	N74334	Decal - Hose Wrap Identification	1
41	N74998	Decal - Hose Identification - Bulkhead (Locate on Bulkhead)	1

3 Rank Opener Hydraulics
10 inch Spacing - 40 ft to 70 ft

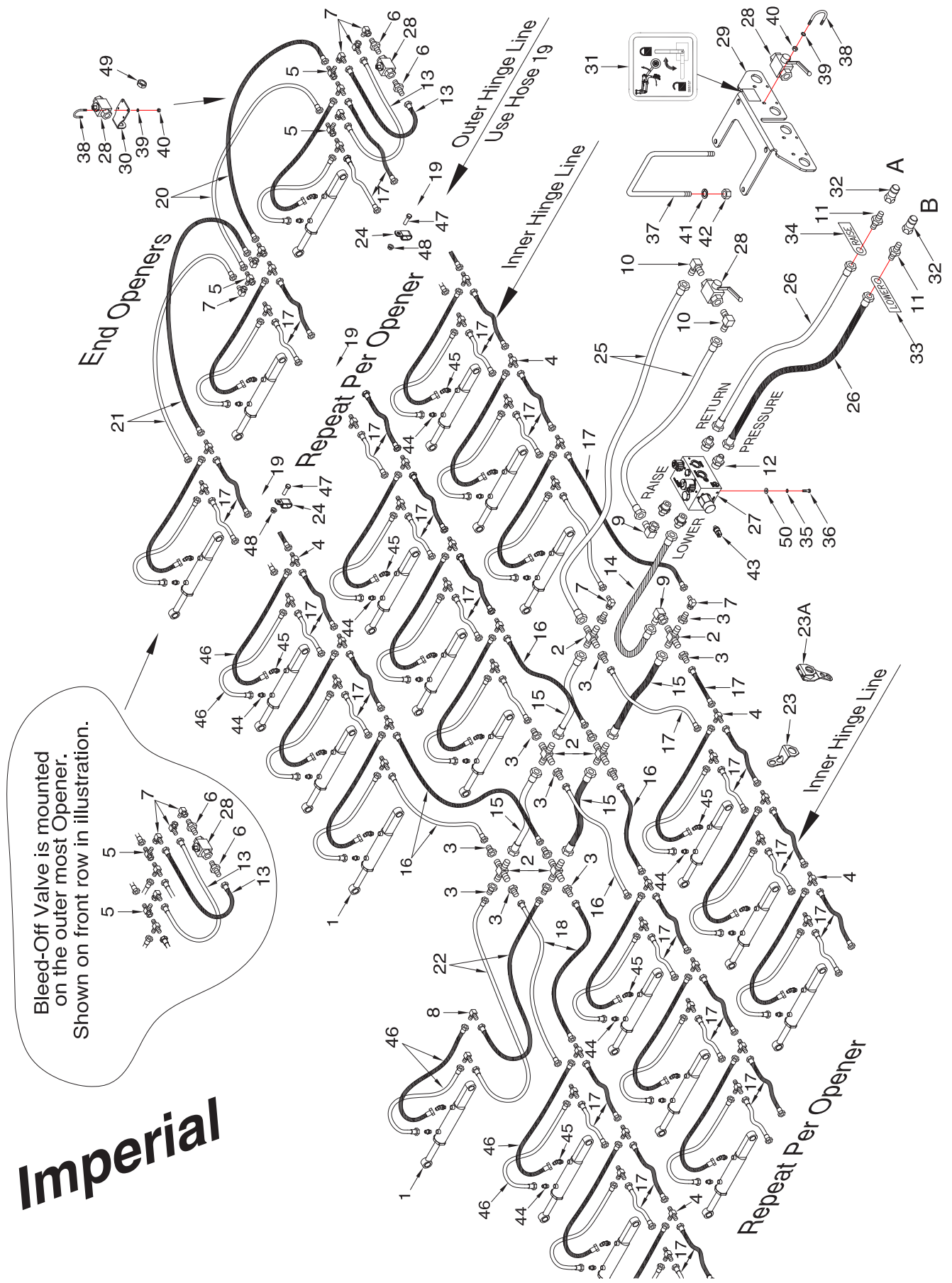

3 Rank Opener Hydraulics - 10 inch Spacing - 40 ft to 70 ft

Item	Part No.	Description	Qty
1	* * * * *	Cylinder - Row Unit	AsReq
2	C-4401	Cross - (4) 7/8-14 MJIC	6
3	F10384	Reducer - 7/8-14 MJIC x 9/16-18 MJIC	14
4	C-4393	Tee - 9/16-18 MJIC	AsReq
5	C-4403	Tee - (2) 9/16-18 MJIC x (1) 9/16-18 FJIC (MMF)	8
6	C15348	Connector - 9/16-18 MJIC x 3/4-16 MORB	4
7	S29967	90 Elbow - 9/16-18 FJIC x 9/16-18 MJIC	10
8	F-3867	90 Elbow - 9/16-18 (#06) MJIC	2
9	K-5806	90 Elbow - 7/8-14 FJIC x 7/8-14 MJIC	2
10	C24585	90 Elbow - 7/8-14 MJIC x 3/4-16 MORB	2
11	C14840	Connector - 7/8-14 MJIC x 3/4-16 MORB - used with Series B coupler	2
	N34505	Connector - 7/8-14 (#10) MJIC x 7/8-14 (#10) MORB - used with Series A coupler	
12	N47903	Connector - 7/8-14 (#10) MJIC x 1 1/16-12 (#12) MORB	4
13	S66243	Hyd Hose - 1/4 x 22 Lg w/9/16-18 FJIC	4
14	S66755	Hyd Hose - 1/2 x 30 Lg - #10 7/8-14 FJIC Swivel Ends	1
15	S66758	Hyd Hose - 1/2 x 34 Lg - #10 7/8-14 FJIC Swivel Ends	4
16	S47973	Hyd Hose - 3/8 x 20 Lg - #6 9/16-18 FJIC	6
17	S42967	Hyd Hose - 3/8 x 30Lg - #6 9/16-18 FJIC	AsReq
18	S65670	Hyd Hose - 3/8 x 42 Lg - #6 9/16-18 FJIC	2
19	S65670	Hyd Hose - 3/8 x 42 Lg - #6 9/16-18 FJIC - Outer Hinge Line	12
20	N53696	Hyd Hose - 3/8 x 66 Lg - #6 9/16-18 FJIC Ends - **40 ft**	4
	S47799	Hyd Hose - 3/8 x 60 Lg - #6 9/16-18 FJIC Ends - **50 ft**	4
	S47799	Hyd Hose - 3/8 x 60 Lg - #6 9/16-18 FJIC Ends - **60 ft**	4
	S47799	Hyd Hose - 3/8 x 60 Lg - #6 9/16-18 FJIC Ends - **70 ft**	4
21	N53696	Hyd Hose - 3/8 x 66 Lg - #6 9/16-18 FJIC Ends - **40 ft**	4
	S65397	Hyd Hose - 3/8 x 80 Lg - #6 9/16-18 FJIC Ends - **50 ft**	4
	S65397	Hyd Hose - 3/8 x 80 Lg - #6 9/16-18 FJIC Ends - **60 ft**	4
	S65397	Hyd Hose - 3/8 x 80 Lg - #6 9/16-18 FJIC Ends - **70 ft**	4
22	S65420	Hyd Hose - 3/8 x 126 Lg - #6 9/16-18 FJIC Ends	2
23	S66245	Hose Holder - Opener	AsReq
23A	S67170	Hose Holder - Opener - Low Profile	6
24	S68415	Hose Holder Loop - Outer Hinge Line	4
25	S65668	Hyd Hose - 3/4 x 120 Lg - #10 7/8-14 FJIC Ends	2
26	S58157	Hyd Hose - 3/4 x 330 Lg - #10 7/8-14 FJIC Ends	2
27	S68006	Manifold - Opener Control	1
28	N42880	Lock Valve - 2 Way Ball	3
28A	N42881	Handle - Valve	1
29	S65129	Valve Mounting Plate	1
30	S66754	Mount Plate - Ball Valve	2
31	S65157	Decal ISO - Openers Lock	1
32	N34443	1/2 Male Pioneer Tip - 3/4-16 MORB - Series B	2
	N75610	1/2 Male Pioneer Tip - 7/8-14 FORB (#10) - Series A	
33	S29959	Tag - Hose ID - Depth Control - LOWER	1
34	S29958	Tag - Hose ID - Depth Control - RAISE	1
35	W-523	Lockwasher - 3/8 ... (Valve Block)	4
36	W-475	Hex Bolt - 3/8 x 1 Lg ....(Valve Block)	4
37	H25628	U-Bolt - 1/2 x 6 x 9 3/8 Lg	2
38	N34319	U-Bolt - 1/4 x 1 1/2 x 2	4
39	W-521	Lockwasher - 1/4	8
40	W-512	Hex Nut - 1/4	8
41	W-525	Lockwasher - 1/2	4
42	W-516	Hex Nut - 1/2	4
43	K62977	Pressure Transducer	1
44	N29358	Connector - 9/16-18 (#06) MJIC x 9/16-18 (#06) MORB (1 per Opener)	AsReq
45	N19578	45 Elbow - 9/16-18 (#06) MJIC x 9/16-18 (#06) MORB (1 per Opener)	AsReq
46	S66243	Hyd Hose - 1/4 x 22 Lg - #6 9/16-18 FJIC Ends (High Flex) (2 per Opener)	AsReq
47	W-475	Hex Bolt - 3/8 x 1 Lg - Outer Hinge Line	4
48	D-5279	Locknut - 3/8 Serrated - Outer Hinge Line	4
49	S-711	Hex Jam Nut - 1	2
50	W-538	Flatwasher - 7/16 ID x 1 OD x 14 GA ... (Valve Block)	4

Imperial

3 Rank Opener Hydraulics
250 mm Spacing - 12 m to 21 m

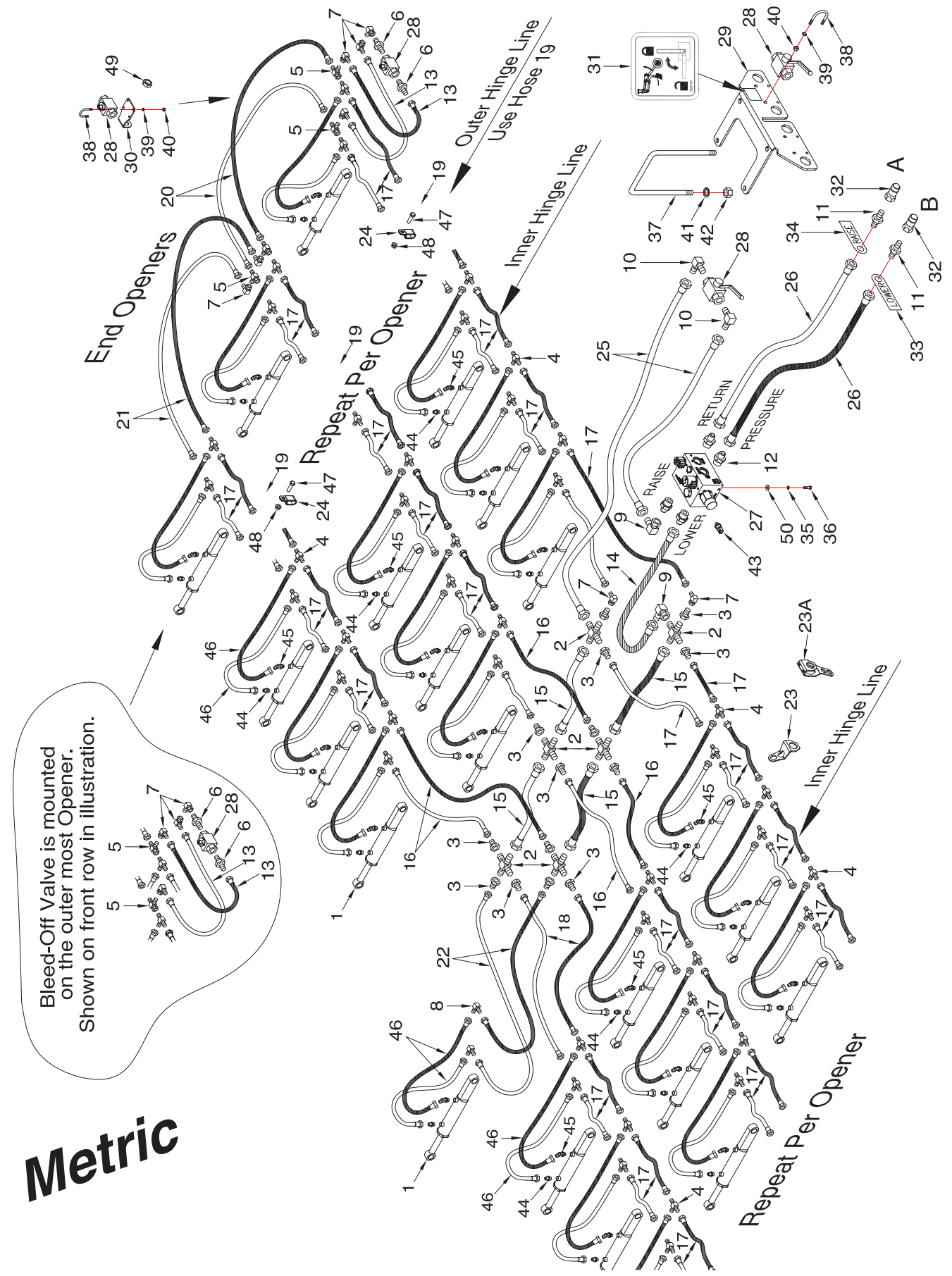

3 Rank Opener Hydraulics - 250 mm Spacing - 12 m to 21 m

Item	Part No.	Description	Qty
1	* * * * *	Cylinder - Row Unit	AsReq
2	C-4401	Cross - (4) 7/8-14 MJIC	6
3	F10384	Reducer - 7/8-14 MJIC x 9/16-18 MJIC	14
4	C-4393	Tee - 9/16-18 MJIC	AsReq
5	C-4403	Tee - (2) 9/16-18 MJIC x (1) 9/16-18 FJIC (MMF)	8
6	C15348	Connector - 9/16-18 MJIC x 3/4-16 MORB	4
7	S29967	90 Elbow - 9/16-18 FJIC x 9/16-18 MJIC	10
8	F-3867	90 Elbow - 9/16-18 (#06) MJIC	2
9	K-5806	90 Elbow - 7/8-14 FJIC x 7/8-14 MJIC	2
10	C24585	90 Elbow - 7/8-14 MJIC x 3/4-16 MORB	2
11	C14840	Connector - 7/8-14 MJIC x 3/4-16 MORB	2
12	N47903	Connector - 7/8-14 (#10) MJIC x 1 1/16-12 (#12) MORB	4
13	S66243	Hyd Hose - 1/4 x 22 Lg w/9/16-18 FJIC - Bleed-Off Valve	4
14	S66755	Hyd Hose - 1/2 x 30 Lg - #10 7/8-14 FJIC Swivel Ends	1
15	S66758	Hyd Hose - 1/2 x 34 Lg - #10 7/8-14 FJIC Swivel Ends	4
16	S47973	Hyd Hose - 3/8 x 20 Lg - #6 9/16-18 FJIC	6
17	S42967	Hyd Hose - 3/8 x 30Lg - #6 9/16-18 FJIC	AsReq
18	S65670	Hyd Hose - 3/8 x 42 Lg - #6 9/16-18 FJIC	2
19	S65670	Hyd Hose - 3/8 x 42 Lg - #6 9/16-18 FJIC - Outer Hinge Line	12
20	N53696	Hyd Hose - 3/8 x 66 Lg - #6 9/16-18 FJIC Ends - **12m**	4
	S65407	Hyd Hose - 3/8 x 72 Lg - #6 9/16-18 FJIC Ends - **15m**	4
	S65407	Hyd Hose - 3/8 x 72 Lg - #6 9/16-18 FJIC Ends - **18m**	4
	S65407	Hyd Hose - 3/8 x 72 Lg - #6 9/16-18 FJIC Ends - **21m**	4
21	N53696	Hyd Hose - 3/8 x 66 Lg - #6 9/16-18 FJIC Ends - **12m**	4
	S66438	Hyd Hose - 3/8 x 92 Lg - #6 9/16-18 FJIC Ends - **15m**	4
	S66438	Hyd Hose - 3/8 x 92 Lg - #6 9/16-18 FJIC Ends - **18m**	4
	S66438	Hyd Hose - 3/8 x 92 Lg - #6 9/16-18 FJIC Ends - **21m**	4
22	S65420	Hyd Hose - 3/8 x 126 Lg - #6 9/16-18 FJIC Ends	2
23	S66245	Hose Holder - Opener	AsReq
23A	S67170	Hose Holder - Opener - Low Profile	6
24	S68415	Hose Holder Loop - Outer Hinge Line	4
25	S65668	Hyd Hose - 3/4 x 120 Lg - #10 7/8-14 FJIC Ends	2
26	S58157	Hyd Hose - 3/4 x 330 Lg - #10 7/8-14 FJIC Ends	2
27	S68006	Manifold - Opener Control	1
28	N42880	Lock Valve - 2 Way Ball	3
28A	N42881	Handle - Valve	1
29	S65129	Valve Mounting Plate	1
30	S66754	Mount Plate - Ball Valve	2
31	S65157	Decal ISO - Openers Lock	1
32	N34443	Male Tip - 3/4-16 MORB - Series B	2
33	S29959	Tag - Hose ID - Depth Control - LOWER	1
34	S29958	Tag - Hose ID - Depth Control - RAISE	1
35	W-523	Lockwasher - 3/8 ... (Valve Block)	4
36	W-475	Hex Bolt - 3/8 x 1 Lg ....(Valve Block)	4
37	H25628	U-Bolt - 1/2 x 6 x 9 3/8 Lg	2
38	N34319	U-Bolt - 1/4 x 1 1/2 x 2	4
39	W-521	Lockwasher - 1/4	8
40	W-512	Hex Nut - 1/4	8
41	W-525	Lockwasher - 1/2	4
42	W-516	Hex Nut - 1/2	4
43	K62977	Pressure Transducer	1
44	N29358	Connector - 9/16-18 (#06) MJIC x 9/16-18 (#06) MORB (1 per Opener)	AsReq
45	N19578	45 Elbow - 9/16-18 (#06) MJIC x 9/16-18 (#06) MORB (1 per Opener)	AsReq
46	S66243	Hyd Hose - 1/4 x 22 Lg - #6 9/16-18 FJIC Ends (High Flex) (2 per Opener)	AsReq
47	W-475	Hex Bolt - 3/8 x 1 Lg - Outer Hinge Line	4
48	D-5279	Locknut - 3/8 Serrated - Outer Hinge Line	4
49	S-711	Hex Jam Nut - 1	2
50	W-538	Flatwasher - 7/16 ID x 1 OD x 14 GA ... (Valve Block)	4

Metric

3 Rank Opener Hydraulics
12 inch Spacing - 40 ft to 70 ft

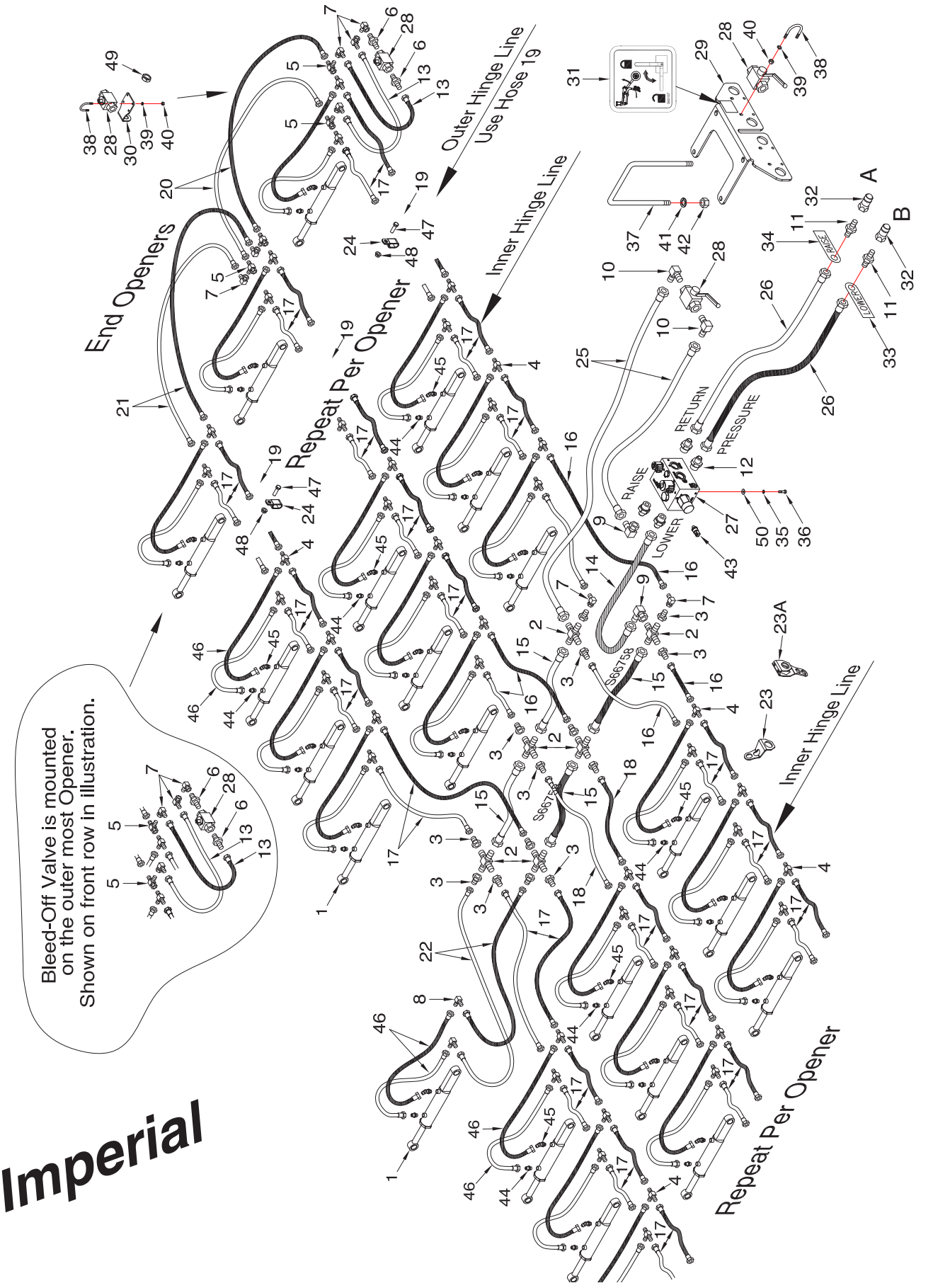

3 Rank Opener Hydraulics - 12 inch Spacing - 40 ft to 70 ft

Item	Part No.	Description	Qty
1	* * * * *	Cylinder - Row Unit	AsReq
2	C-4401	Cross - (4) 7/8-14 MJIC	6
3	F10384	Reducer - 7/8-14 MJIC x 9/16-18 MJIC	14
4	C-4393	Tee - 9/16-18 MJIC	AsReq
5	C-4403	Tee - (2) 9/16-18 MJIC x (1) 9/16-18 FJIC (MMF)	8
6	C15348	Connector - 9/16-18 MJIC x 3/4-16 MORB	4
7	S29967	90 Elbow - 9/16-18 FJIC x 9/16-18 MJIC	10
8	F-3867	90 Elbow - 9/16-18 (#06) MJIC	2
9	K-5806	90 Elbow - 7/8-14 FJIC x 7/8-14 MJIC	2
10	C24585	90 Elbow - 7/8-14 MJIC x 3/4-16 MORB	2
11	C14840	Connector - 7/8-14 MJIC x 3/4-16 MORB	2
12	N47903	Connector - 7/8-14 (#10) MJIC x 1 1/16-12 (#12) MORB	4
13	S66243	Hyd Hose - 1/4 x 22 Lg w/9/16-18 FJIC - Bleed-Off Valve	4
14	S66755	Hyd Hose - 1/2 x 30 Lg - #10 7/8-14 FJIC Swivel Ends	1
15	S66758	Hyd Hose - 1/2 x 34 Lg - #10 7/8-14 FJIC Swivel Ends	4
16	S47973	Hyd Hose - 3/8 x 20 Lg - #6 9/16-18 FJIC	6
17	S42969	Hyd Hose - 3/8 x 36 Lg - #6 9/16-18 FJIC	AsReq
18	S65670	Hyd Hose - 3/8 x 42 Lg - #6 9/16-18 FJIC	2
19	S44353	Hyd Hose - 3/8 x 48 Lg - #6 9/16-18 FJIC - Outer Hinge Line	12
20	N53696	Hyd Hose - 3/8 x 66 Lg - #6 9/16-18 FJIC Ends - **40 ft**	4
	N48126	Hyd Hose - 3/8 x 76 Lg - #6 9/16-18 FJIC Ends - **50 ft**	4
	S66436	Hyd Hose - 3/8 x 86 Lg - #6 9/16-18 FJIC Ends - **60 ft**	4
	N53696	Hyd Hose - 3/8 x 66 Lg - #6 9/16-18 FJIC Ends - **70 ft**	4
21	N53696	Hyd Hose - 3/8 x 66 Lg - #6 9/16-18 FJIC Ends - **40 ft**	4
	N53696	Hyd Hose - 3/8 x 66 Lg - #6 9/16-18 FJIC Ends - **50 ft**	4
	N48126	Hyd Hose - 3/8 x 76 Lg - #6 9/16-18 FJIC Ends - **60 ft**	4
	S66436	Hyd Hose - 3/8 x 86 Lg - #6 9/16-18 FJIC Ends - **70 ft**	4
22	S65420	Hyd Hose - 3/8 x 126 Lg - #6 9/16-18 FJIC Ends	2
23	S66245	Hose Holder - Opener	AsReq
23A	S67170	Hose Holder - Opener - Low Profile	6
24	S68415	Hose Holder Loop - Outer Hinge Line	4
25	S65668	Hyd Hose - 3/4 x 120 Lg - #10 7/8-14 FJIC Ends	2
26	S58157	Hyd Hose - 3/4 x 330 Lg - #10 7/8-14 FJIC Ends	2
27	S68006	Manifold - Opener Control	1
28	N42880	Lock Valve - 2 Way Ball	3
28A	N42881	Handle - Valve	1
29	S65129	Valve Mounting Plate	1
30	S66754	Mount Plate - Ball Valve	2
31	S65157	Decal ISO - Openers Lock	1
32	N34443	Male Tip - 3/4-16 MORB - Series B	2
33	S29959	Tag - Hose ID - Depth Control - LOWER	1
34	S29958	Tag - Hose ID - Depth Control - RAISE	1
35	W-523	Lockwasher - 3/8 ... (Valve Block)	4
36	W-475	Hex Bolt - 3/8 x 1 Lg ....(Valve Block)	4
37	H25628	U-Bolt - 1/2 x 6 x 9 3/8 Lg	2
38	N34319	U-Bolt - 1/4 x 1 1/2 x 2	4
39	W-521	Lockwasher - 1/4	8
40	W-512	Hex Nut - 1/4	8
41	W-525	Lockwasher - 1/2	4
42	W-516	Hex Nut - 1/2	4
43	K62977	Pressure Transducer	1
44	N29358	Connector - 9/16-18 (#06) MJIC x 9/16-18 (#06) MORB (1 per Opener)	AsReq
45	N19578	45 Elbow - 9/16-18 (#06) MJIC x 9/16-18 (#06) MORB (1 per Opener)	AsReq
46	S66243	Hyd Hose - 1/4 x 22 Lg - #6 9/16-18 FJIC Ends (High Flex) (2 per Opener)	AsReq
47	W-475	Hex Bolt - 3/8 x 1 Lg - Outer Hinge Line	4
48	D-5279	Locknut - 3/8 Serrated - Outer Hinge Line	4
49	S-711	Hex Jam Nut - 1	2
50	W-538	Flatwasher - 7/16 ID x 1 OD x 14 GA ... (Valve Block)	4

Imperial

3 Rank Opener Hydraulics
300 mm Spacing - 12 m to 21 m

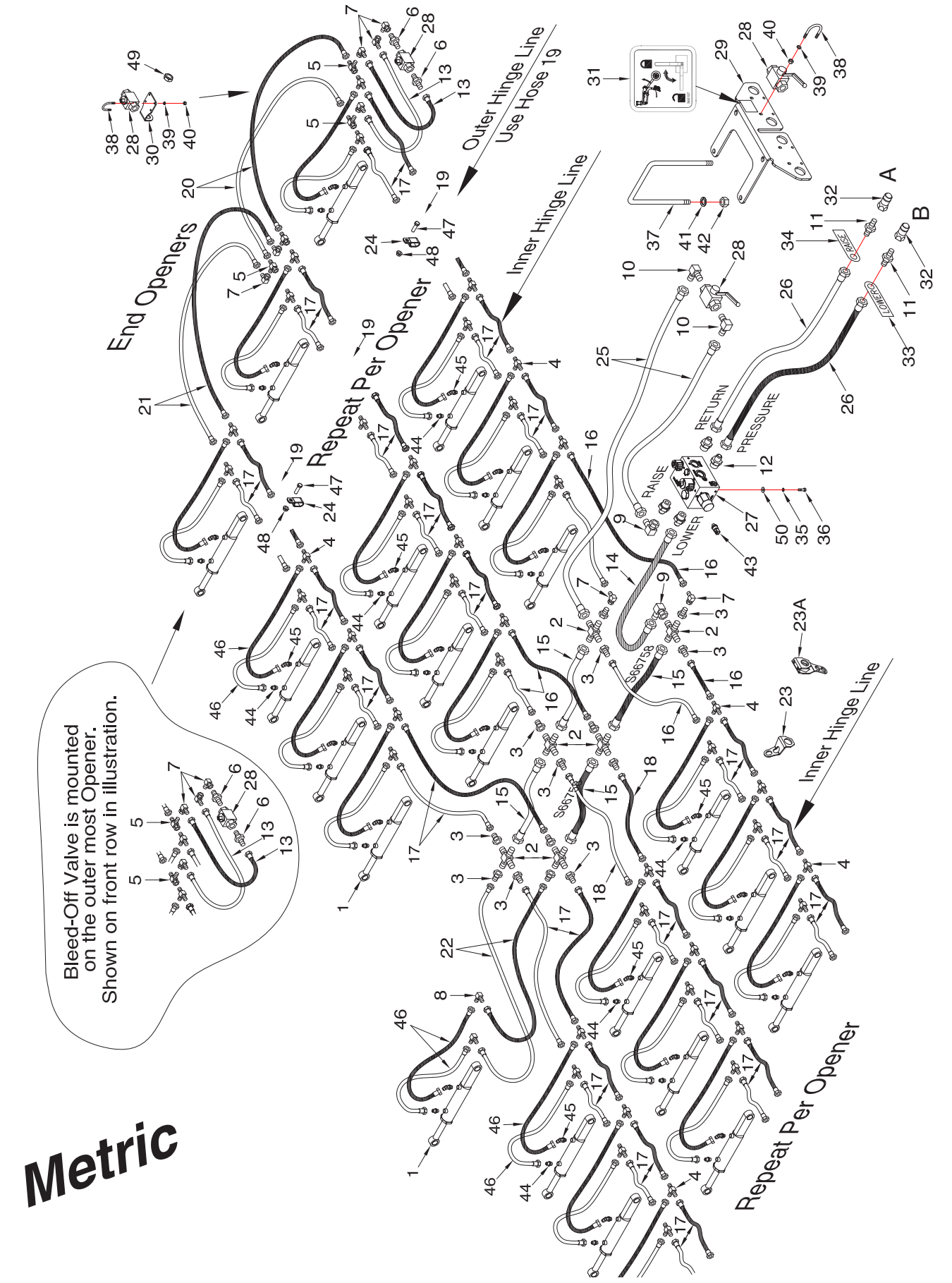

3 Rank Opener Hydraulics - 300 mm Spacing - 12 m to 21 m

Item	Part No.	Description	Qty
1	* * * * *	Cylinder - Row Unit	AsReq
2	C-4401	Cross - (4) 7/8-14 MJIC	6
3	F10384	Reducer - 7/8-14 MJIC x 9/16-18 MJIC	14
4	C-4393	Tee - 9/16-18 MJIC	AsReq
5	C-4403	Tee - (2) 9/16-18 MJIC x (1) 9/16-18 FJIC (MMF)	8
6	C15348	Connector - 9/16-18 MJIC x 3/4-16 MORB	4
7	S29967	90 Elbow - 9/16-18 FJIC x 9/16-18 MJIC	10
8	F-3867	90 Elbow - 9/16-18 (#06) MJIC	2
9	K-5806	90 Elbow - 7/8-14 FJIC x 7/8-14 MJIC	2
10	C24585	90 Elbow - 7/8-14 MJIC x 3/4-16 MORB	2
11	C14840	Connector - 7/8-14 MJIC x 3/4-16 MORB	2
12	N47903	Connector - 7/8-14 (#10) MJIC x 1 1/16-12 (#12) MORB	4
13	S66243	Hyd Hose - 1/4 x 22 Lg w/9/16-18 FJIC - Bleed-Off Valve	4
14	S66755	Hyd Hose - 1/2 x 30 Lg - #10 7/8-14 FJIC Swivel Ends	1
15	S66758	Hyd Hose - 1/2 x 34 Lg - #10 7/8-14 FJIC Swivel Ends	4
16	S47973	Hyd Hose - 3/8 x 20 Lg - #6 9/16-18 FJIC	6
17	S42969	Hyd Hose - 3/8 x 36 Lg - #6 9/16-18 FJIC	AsReq
18	S65670	Hyd Hose - 3/8 x 42 Lg - #6 9/16-18 FJIC	2
19	S44353	Hyd Hose - 3/8 x 48 Lg - #6 9/16-18 FJIC - Outer Hinge Line	12
20	S65407	Hyd Hose - 3/8 x 72 Lg - #6 9/16-18 FJIC Ends - **12m**	4
	S66436	Hyd Hose - 3/8 x 86 Lg - #6 9/16-18 FJIC Ends - **15m**	4
	S66437	Hyd Hose - 3/8 x 100 Lg- #6 9/16-18 FJIC Ends - **18m**	4
	N48126	Hyd Hose - 3/8 x 76 Lg - #6 9/16-18 FJIC Ends - **21m**	4
21	N48126	Hyd Hose - 3/8 x 76 Lg - #6 9/16-18 FJIC Ends - **12m**	4
	N48126	Hyd Hose - 3/8 x 76 Lg - #6 9/16-18 FJIC Ends - **15m**	4
	S66436	Hyd Hose - 3/8 x 86 Lg - #6 9/16-18 FJIC Ends - **18m**	4
	S66437	Hyd Hose - 3/8 x 100 Lg- #6 9/16-18 FJIC Ends - **21m**	4
22	S65420	Hyd Hose - 3/8 x 126 Lg - #6 9/16-18 FJIC Ends	2
23	S66245	Hose Holder - Opener	AsReq
23A	S67170	Hose Holder - Opener - Low Profile	6
24	S68415	Hose Holder Loop - Outer Hinge Line	4
25	S65668	Hyd Hose - 3/4 x 120 Lg - #10 7/8-14 FJIC Ends	2
26	S58157	Hyd Hose - 3/4 x 330 Lg - #10 7/8-14 FJIC Ends	2
27	S68006	Manifold - Opener Control	1
28	N42880	Lock Valve - 2 Way Ball	3
28A	N42881	Handle - Valve	1
29	S65129	Valve Mounting Plate	1
30	S66754	Mount Plate - Ball Valve	2
31	S65157	Decal ISO - Openers Lock	1
32	N34443	Male Tip - 3/4-16 MORB - Series B	2
33	S29959	Tag - Hose ID - Depth Control - LOWER	1
34	S29958	Tag - Hose ID - Depth Control - RAISE	1
35	W-523	Lockwasher - 3/8 ... (Valve Block)	4
36	W-475	Hex Bolt - 3/8 x 1 Lg ....(Valve Block)	4
37	H25628	U-Bolt - 1/2 x 6 x 9 3/8 Lg	2
38	N34319	U-Bolt - 1/4 x 1 1/2 x 2	4
39	W-521	Lockwasher - 1/4	8
40	W-512	Hex Nut - 1/4	8
41	W-525	Lockwasher - 1/2	4
42	W-516	Hex Nut - 1/2	4
43	K62977	Pressure Transducer	1
44	N29358	Connector - 9/16-18 (#06) MJIC x 9/16-18 (#06) MORB (1 per Opener)	AsReq
45	N19578	45 Elbow - 9/16-18 (#06) MJIC x 9/16-18 (#06) MORB (1 per Opener)	AsReq
46	S66243	Hyd Hose - 1/4 x 22 Lg - #6 9/16-18 FJIC Ends (High Flex) (2 per Opener)	AsReq
47	W-475	Hex Bolt - 3/8 x 1 Lg - Outer Hinge Line	4
48	D-5279	Locknut - 3/8 Serrated - Outer Hinge Line	4
49	S-711	Hex Jam Nut - 1	2
50	W-538	Flatwasher - 7/16 ID x 1 OD x 14 GA ... (Valve Block)	4

Metric

3 Rank Opener Hydraulics
15 inch (380 mm) Spacing - 40 ft to 70 ft

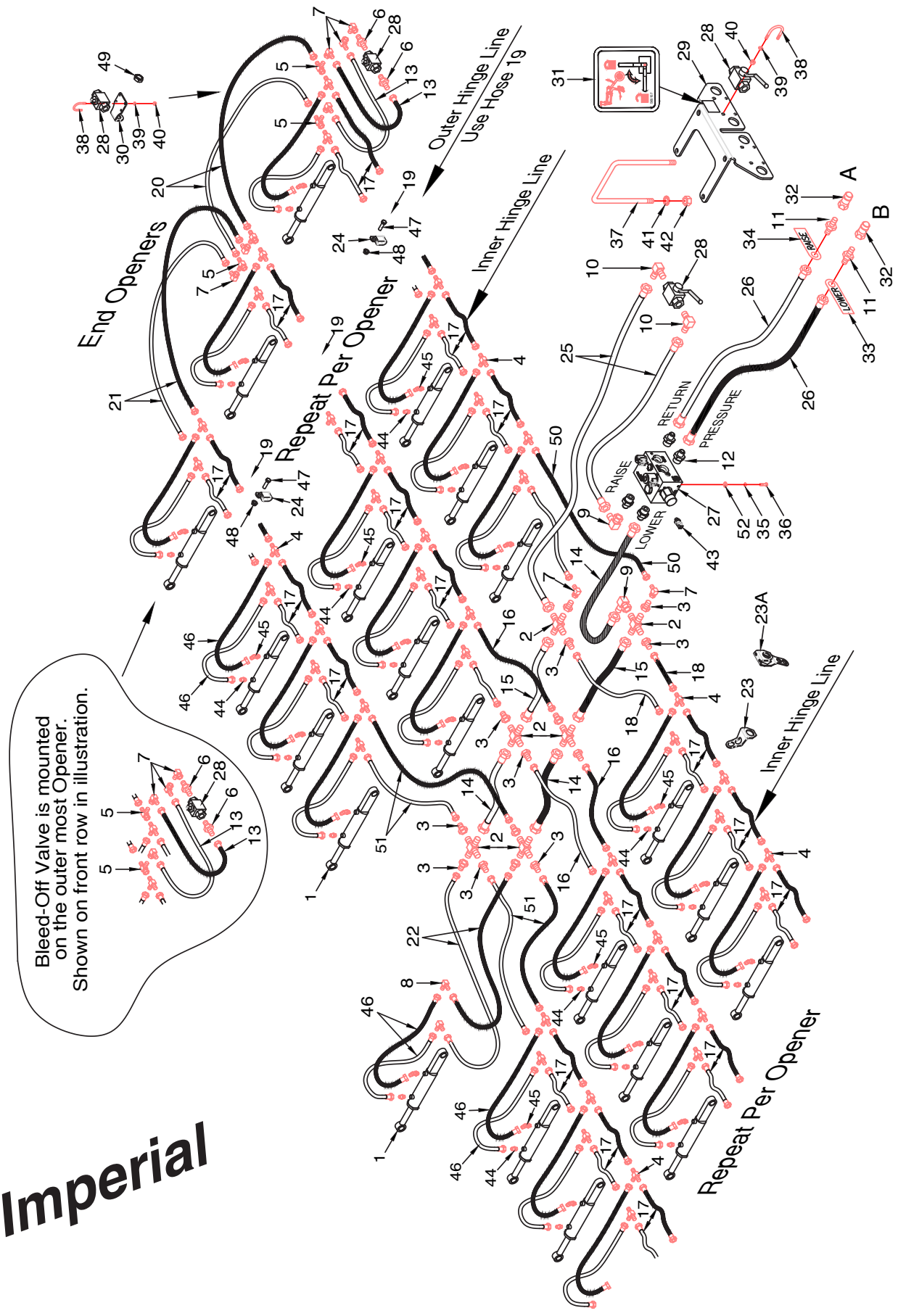

3 Rank Opener Hydraulics - 15 inch (380 mm) Spacing - 40 ft to 70 ft			
Item	**Part No.**	**Description**	**Qty**
1	* * * * *	Cylinder - Row Unit	AsReq
2	C-4401	Cross - (4) 7/8-14 MJIC	6
3	F10384	Reducer - 7/8-14 MJIC x 9/16-18 MJIC	14
4	C-4393	Tee - 9/16-18 MJIC	AsReq
5	C-4403	Tee - (2) 9/16-18 MJIC x (1) 9/16-18 FJIC (MMF)	8
6	C15348	Connector - 9/16-18 MJIC x 3/4-16 MORB	4
7	S29967	90 Elbow - 9/16-18 FJIC x 9/16-18 MJIC	10
8	F-3867	90 Elbow - 9/16-18 (#06) MJIC	2
9	K-5806	90 Elbow - 7/8-14 FJIC x 7/8-14 MJIC	2
10	C24585	90 Elbow - 7/8-14 MJIC x 3/4-16 MORB	2
11	C14840	Connector - 7/8-14 MJIC x 3/4-16 MORB	2
12	N47903	Connector - 7/8-14 (#10) MJIC x 1 1/16-12 (#12) MORB	4
13	S66243	Hyd Hose - 1/4 x 22 Lg w/9/16-18 FJIC - Bleed-Off Valve	4
14	S66755	Hyd Hose - 1/2 x 30 Lg - #10 7/8-14 FJIC Swivel Ends	1
15	S66758	Hyd Hose - 1/2 x 34 Lg - #10 7/8-14 FJIC Swivel Ends	4
16	S65670	Hyd Hose - 3/8 x 42 Lg - #6 9/16-18 FJIC	4
17	S65380	Hyd Hose - 3/8 x 45 Lg - #6 9/16-18 FJIC Ends	AsReq
18	S65437	Hyd Hose - 3/8 x 54 Lg - #6 9/16-18 FJIC Ends	2
19	S47799	Hyd Hose - 3/8 x 60 Lg - #6 9/16-18 FJIC - Outer Hinge Line	12
20	S65407	Hyd Hose - 3/8 x 72 Lg - #6 9/16-18 FJIC Ends - **40 ft**	4
	S66436	Hyd Hose - 3/8 x 86 Lg - #6 9/16-18 FJIC Ends - **50 ft**	4
	S66436	Hyd Hose - 3/8 x 86 Lg - #6 9/16-18 FJIC Ends - **60 ft**	4
	S65407	Hyd Hose - 3/8 x 72 Lg - #6 9/16-18 FJIC Ends - **70 ft**	4
21	S65397	Hyd Hose - 3/8 x 80 Lg - #6 9/16-18 FJIC Ends - **40 ft**	4
	S66437	Hyd Hose - 3/8 x 100 Lg - #6 9/16-18 FJIC Ends - **50 ft**	4
	S65407	Hyd Hose - 3/8 x 72 Lg - #6 9/16-18 FJIC Ends - **60 ft**	4
	S66437	Hyd Hose - 3/8 x 100 Lg - #6 9/16-18 FJIC Ends - **70 ft**	4
22	S65420	Hyd Hose - 3/8 x 126 Lg - #6 9/16-18 FJIC Ends	2
23	S66245	Hose Holder - Opener	AsReq
23A	S67170	Hose Holder - Opener - Low Profile	6
24	S68415	Hose Holder Loop - Outer Hinge Line	4
25	S65668	Hyd Hose - 3/4 x 120 Lg - #10 7/8-14 FJIC Ends	2
26	S58157	Hyd Hose - 3/4 x 330 Lg - #10 7/8-14 FJIC Ends	2
27	S68006	Manifold - Opener Control	1
28	N42880	Lock Valve - 2 Way Ball	3
28A	N42881	Handle - Valve	1
29	S65129	Valve Mounting Plate	1
30	S66754	Mount Plate - Ball Valve	2
31	S65157	Decal ISO - Openers Lock	1
32	N34443	Male Tip - 3/4-16 MORB - Series B	2
33	S29959	Tag - Hose ID - Depth Control - LOWER	1
34	S29958	Tag - Hose ID - Depth Control - RAISE	1
35	W-523	Lockwasher - 3/8 ... (Valve Block)	4
36	W-475	Hex Bolt - 3/8 x 1 Lg ....(Valve Block)	4
37	H25628	U-Bolt - 1/2 x 6 x 9 3/8 Lg	2
38	N34319	U-Bolt - 1/4 x 1 1/2 x 2	4
39	W-521	Lockwasher - 1/4	8
40	W-512	Hex Nut - 1/4	8
41	W-525	Lockwasher - 1/2	4
42	W-516	Hex Nut - 1/2	4
43	K62977	Pressure Transducer	1
44	N29358	Connector - 9/16-18 (#06) MJIC x 9/16-18 (#06) MORB (1 per Opener)	AsReq
45	N19578	45 Elbow - 9/16-18 (#06) MJIC x 9/16-18 (#06) MORB (1 per Opener)	AsReq
46	S66243	Hyd Hose - 1/4 x 22 Lg - #6 9/16-18 FJIC Ends (High Flex) (2 per Opener)	AsReq
47	W-475	Hex Bolt - 3/8 x 1 Lg - Outer Hinge Line	4
48	D-5279	Locknut - 3/8 Serrated - Outer Hinge Line	4
49	S-711	Hex Jam Nut - 1	2
50	S47973	Hyd Hose - 3/8 x 20 Lg - #6 9/16-18 FJIC	2
51	S42967	Hyd Hose - 3/8 x 30 Lg w/ #6 9/16-18 FJIC	4
52	W-538	Flatwasher - 7/16 ID x 1 OD x 14 GA ... (Valve Block)	4

Imperial

Four Rank Hydraulic Option - 10 inch Spacing - 40 ft Model

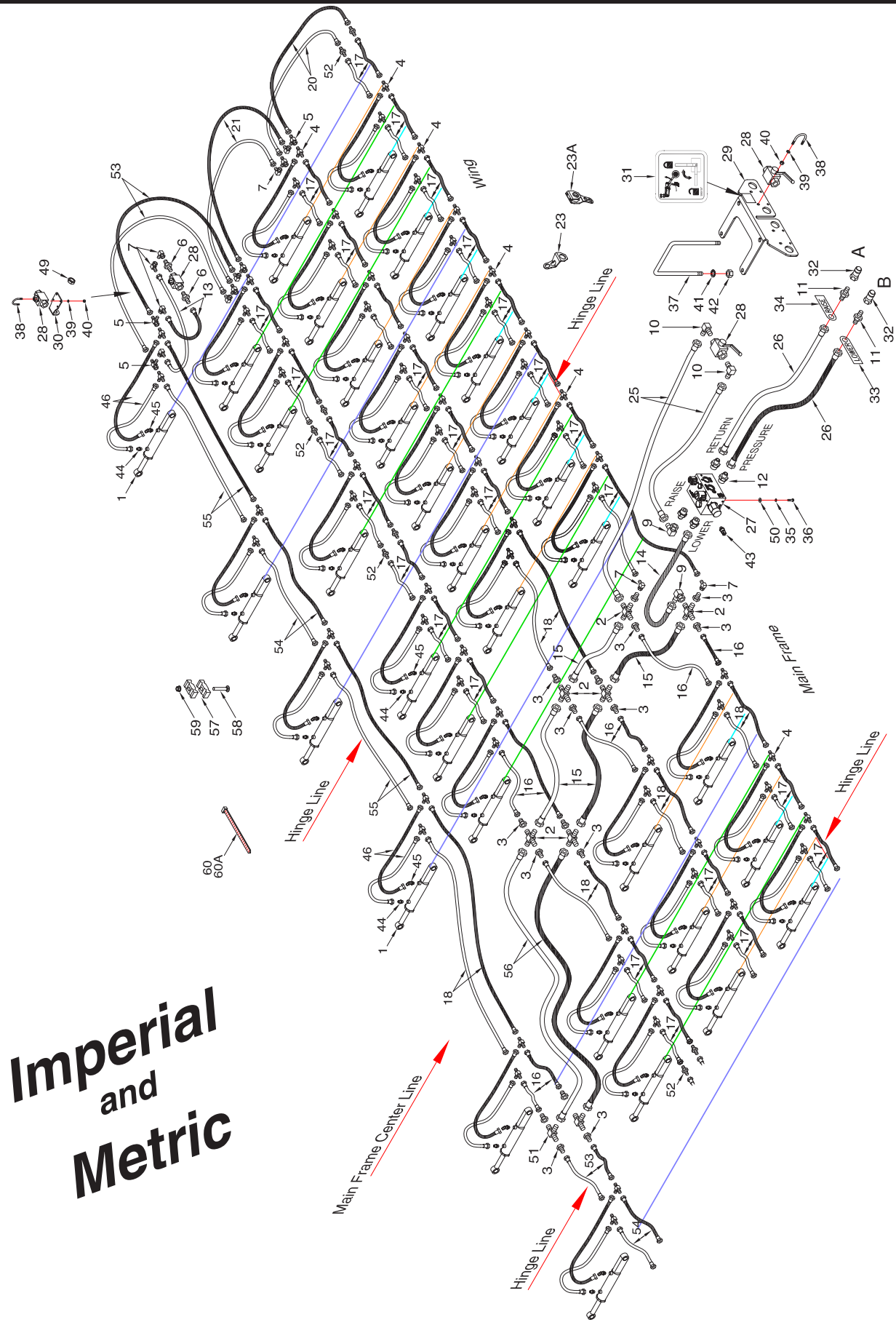

Four Rank Hydraulic Option - 10 inch Spacing - 40 ft

Item	Part No.	Description	Qty
1	* * * * *	Cylinder - Row Unit	48
2	C-4401	Cross - (4) 7/8-14 MJIC	6
3	F10384	Reducer - 7/8-14 MJIC x 9/16-18 MJIC - 4 for 4th Rank	18
4	C-4393	Tee - 9/16-18 MJIC - 2 for 4th Rank	96
5	C-4403	Tee - (2) 9/16-18 MJIC x (1) 9/16-18 FJIC (MMF) - 4 for 4th Rank	8
6	C15348	Connector - 9/16-18 MJIC x 3/4-16 MORB	4
7	S29967	90 Elbow - 9/16-18 FJIC x 9/16-18 MJIC - 4 for 4th Rank	10
8	F-3867	90 Elbow - 9/16-18 (#06) MJIC	2
9	K-5806	90 Elbow - 7/8-14 FJIC x 7/8-14 MJIC	2
10	C24585	90 Elbow - 7/8-14 MJIC x 3/4-16 MORB	2
11	C14840	Connector - 7/8-14 MJIC x 3/4-16 MORB	2
12	N47903	Connector - 7/8-14 (#10) MJIC x 1 1/16-12 (#12) MORB	4
13	S66243	Hyd Hose - 1/4 x 22 Lg w/9/16-18 FJIC - Bleed-Off Valve	4
14	S66755	Hyd Hose - 1/2 x 30 Lg - #10 7/8-14 FJIC Swivel Ends	1
15	S66758	Hyd Hose - 1/2 x 34 Lg - #10 7/8-14 FJIC Swivel Ends	4
16	S47973	Hyd Hose - 3/8 x 20 Lg - #6 9/16-18 FJIC	10
17	S42967	Hyd Hose - 3/8 x 30Lg - #6 9/16-18 FJIC	86
18	S65670	Hyd Hose - 3/8 x 42 Lg - #6 9/16-18 FJIC - 8 for 4th Rank	10
19	* * * * *		
20	N53696	Hyd Hose - 3/8 x 66 Lg - #6 9/16-18 FJIC Ends - 12m and **40 ft**	4
21	N53696	Hyd Hose - 3/8 x 66 Lg - #6 9/16-18 FJIC Ends - 12m and **40 ft**	4
22	S65420	Hyd Hose - 3/8 x 126 Lg - #6 9/16-18 FJIC Ends - Not required with 4th Row Kit	2
23	S66245	Hose Holder - Opener	46
23A	S67170	Hose Holder - Opener - Low Profile	6
24	S68415	Hose Holder Loop - Outer Hinge Line	4
25	S65668	Hyd Hose - 3/4 x 120 Lg - #10 7/8-14 FJIC Ends	2
26	S58157	Hyd Hose - 3/4 x 330 Lg - #10 7/8-14 FJIC Ends	2
27	S68006	Manifold - Opener Control	1
28	N42880	Lock Valve - 2 Way Ball	3
28A	N42881	Handle - Valve	1
29	S65129	Valve Mounting Plate	1
30	S66754	Mount Plate - Ball Valve	2
31	S65157	Decal ISO - Openers Lock	1
32	N34443	Male Tip - 3/4-16 MORB - Series B	2
33	S29959	Tag - Hose ID - Depth Control - LOWER	1
34	S29958	Tag - Hose ID - Depth Control - RAISE	1
35	W-523	Lockwasher - 3/8 ... (Valve Block)	4
36	W-475	Hex Bolt - 3/8 x 1 Lg ...(Valve Block)	4
37	H25628	U-Bolt - 1/2 x 6 x 9 3/8 Lg	2
38	N34319	U-Bolt - 1/4 x 1 1/2 x 2	4
39	W-521	Lockwasher - 1/4	8
40	W-512	Hex Nut - 1/4	8
41	W-525	Lockwasher - 1/2	4
42	W-516	Hex Nut - 1/2	4
43	K62977	Pressure Transducer	1
44	N29358	Connector - 9/16-18 (#06) MJIC x 9/16-18 (#06) MORB (1 per Opener)	48
45	N19578	45 Elbow - 9/16-18 (#06) MJIC x 9/16-18 (#06) MORB (1 per Opener)	48
46	S66243	Hyd Hose - 1/4 x 22 Lg - #6 9/16-18 FJIC Ends (High Flex) (2 per Opener)	100
47	W-475	Hex Bolt - 3/8 x 1 Lg - Outer Hinge Line	4
48	D-5279	Locknut - 3/8 Serrated - Outer Hinge Line	4
49	S-711	Hex Jam Nut - 1	2
50	W-538	Flatwasher - 7/16 ID x 1 OD x 14 GA ... (Valve Block)	4
51	C-4394	Tee - (3) 7/8-14 MJIC	2
52	H18269	Connector - 9/16-18 (#06) MJIC	12
53	S65437	Hyd Hose - 3/8 x 54 Lg - #6 9/16-18 FJIC	6
54	S47799	Hyd Hose - 3/8 x 60 Lg - #6 9/16-18 FJIC	4
55	S65397	Hyd Hose - 3/8 x 80 Lg - #6 9/16-18 FJIC	6
56	H-4408	Hyd Hose - 1/2 x 84 Lg w/7/8-14 FJIC	2
57	C-4698	Oil Line Clamp	8
58	W14501	Carriage Bolt - 3/8 x 2 1/4 Lg	4
59	S27987	Locknut - 3/8 Flanged Centre Lock	4
60	S13336	Nylon Tie Strap - 3/8 x 24 Lg	12
60A	D-4838	Nylon Tie Strap - 5/16 x 14 1/2 Lg	6

Imperial and Metric

Four Rank Hydraulic Option - 10 inch Spacing - 50 ft Model

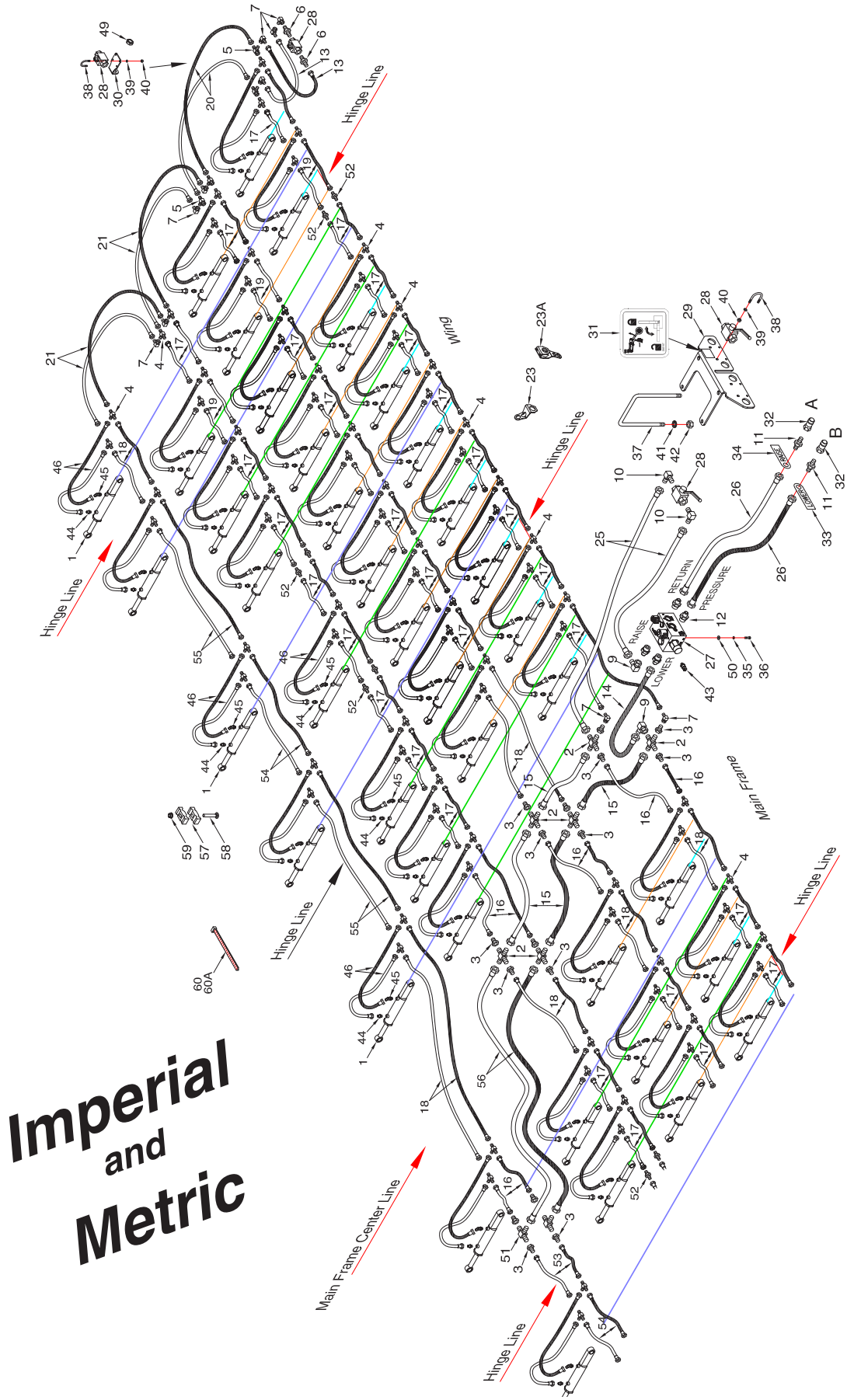

Four Rank Hydraulic Option - 10 inch - 50 ft

Item	Part No.	Description	Qty
1	* * * * *	Cylinder - Row Unit	60
2	C-4401	Cross - (4) 7/8-14 MJIC	6
3	F10384	Reducer - 7/8-14 MJIC x 9/16-18 MJIC - 4 for 4th Rank	18
4	C-4393	Tee - 9/16-18 MJIC - 6 for 4th Rank	124
5	C-4403	Tee - (2) 9/16-18 MJIC x (1) 9/16-18 FJIC (MMF)	8
6	C15348	Connector - 9/16-18 MJIC x 3/4-16 MORB	4
7	S29967	90 Elbow - 9/16-18 FJIC x 9/16-18 MJIC - 4 for 4th Rank	20
8	F-3867	90 Elbow - 9/16-18 (#06) MJIC	2
9	K-5806	90 Elbow - 7/8-14 FJIC x 7/8-14 MJIC	2
10	C24585	90 Elbow - 7/8-14 MJIC x 3/4-16 MORB	2
11	C14840	Connector - 7/8-14 MJIC x 3/4-16 MORB	2
12	N47903	Connector - 7/8-14 (#10) MJIC x 1 1/16-12 (#12) MORB	4
13	S66243	Hyd Hose - 1/4 x 22 Lg w/9/16-18 FJIC - Bleed-Off Valve	4
14	S66755	Hyd Hose - 1/2 x 30 Lg - #10 7/8-14 FJIC Swivel Ends	1
15	S66758	Hyd Hose - 1/2 x 34 Lg - #10 7/8-14 FJIC Swivel Ends	4
16	S47973	Hyd Hose - 3/8 x 20 Lg - #6 9/16-18 FJIC	10
17	S42967	Hyd Hose - 3/8 x 30Lg - #6 9/16-18 FJIC	98
18	S65670	Hyd Hose - 3/8 x 42 Lg - #6 9/16-18 FJIC	14
19	S65670	Hyd Hose - 3/8 x 42 Lg - #6 9/16-18 FJIC - Outer Hinge Line	12
20	S65407	Hyd Hose - 3/8 x 72 Lg - #6 9/16-18 FJIC Ends - 15m	4
	S47799	Hyd Hose - 3/8 x 60 Lg - #6 9/16-18 FJIC Ends - **50 ft**	4
21	S66438	Hyd Hose - 3/8 x 92 Lg - #6 9/16-18 FJIC Ends - 15m	8
	S65397	Hyd Hose - 3/8 x 80 Lg - #6 9/16-18 FJIC Ends - **50 ft**	4
22	S65420	Hyd Hose - 3/8 x 126 Lg - #6 9/16-18 FJIC Ends - Not required with 4th Row Kit	2
23	S66245	Hose Holder - Opener	58
23A	S67170	Hose Holder - Opener - Low Profile	6
24	S68415	Hose Holder Loop - Outer Hinge Line	4
25	S65668	Hyd Hose - 3/4 x 120 Lg - #10 7/8-14 FJIC Ends	2
26	S58157	Hyd Hose - 3/4 x 330 Lg - #10 7/8-14 FJIC Ends	2
27	S68006	Manifold - Opener Control	1
28	N42880	Lock Valve - 2 Way Ball	3
28A	N42881	Handle - Valve	1
29	S65129	Valve Mounting Plate	1
30	S66754	Mount Plate - Ball Valve	2
31	S65157	Decal ISO - Openers Lock	1
32	N34443	Male Tip - 3/4-16 MORB - Series B	2
33	S29959	Tag - Hose ID - Depth Control - LOWER	1
34	S29958	Tag - Hose ID - Depth Control - RAISE	1
35	W-523	Lockwasher - 3/8 ... (Valve Block)	4
36	W-475	Hex Bolt - 3/8 x 1 Lg ....(Valve Block)	4
37	H25628	U-Bolt - 1/2 x 6 x 9 3/8 Lg	2
38	N34319	U-Bolt - 1/4 x 1 1/2 x 2	4
39	W-521	Lockwasher - 1/4	8
40	W-512	Hex Nut - 1/4	8
41	W-525	Lockwasher - 1/2	4
42	W-516	Hex Nut - 1/2	4
43	K62977	Pressure Transducer	1
44	N29358	Connector - 9/16-18 (#06) MJIC x 9/16-18 (#06) MORB (1 per Opener)	60
45	N19578	45 Elbow - 9/16-18 (#06) MJIC x 9/16-18 (#06) MORB (1 per Opener)	60
46	S66243	Hyd Hose - 1/4 x 22 Lg - #6 9/16-18 FJIC Ends (High Flex) (2 per Opener)	124
47	W-475	Hex Bolt - 3/8 x 1 Lg - Outer Hinge Line	4
48	D-5279	Locknut - 3/8 Serrated - Outer Hinge Line	4
49	S-711	Hex Jam Nut - 1	2
50	W-538	Flatwasher - 7/16 ID x 1 OD x 14 GA ... (Valve Block)	4
51	C-4394	Tee - (3) 7/8-14 MJIC	2
52	H18269	Connector - 9/16-18 (#06) MJIC	12
53	S65437	Hyd Hose - 3/8 x 54 Lg - #6 9/16-18 FJIC	2
54	S47799	Hyd Hose - 3/8 x 60 Lg - #6 9/16-18 FJIC	4
55	S65397	Hyd Hose - 3/8 x 80 Lg - #6 9/16-18 FJIC	6
56	H-4408	Hyd Hose - 1/2 x 84 Lg w/7/8-14 FJIC	2
57	C-4698	Oil Line Clamp	8
58	W14501	Carriage Bolt - 3/8 x 2 1/4 Lg	4
59	S27987	Locknut - 3/8 Flanged Centre Lock	4
60	S13336	Nylon Tie Strap - 3/8 x 24 Lg	12
60A	D-4838	Nylon Tie Strap - 5/16 x 14 1/2 Lg	6

Imperial and Metric

Four Rank Hydraulic Option - 10 inch Spacing - 60 ft Model

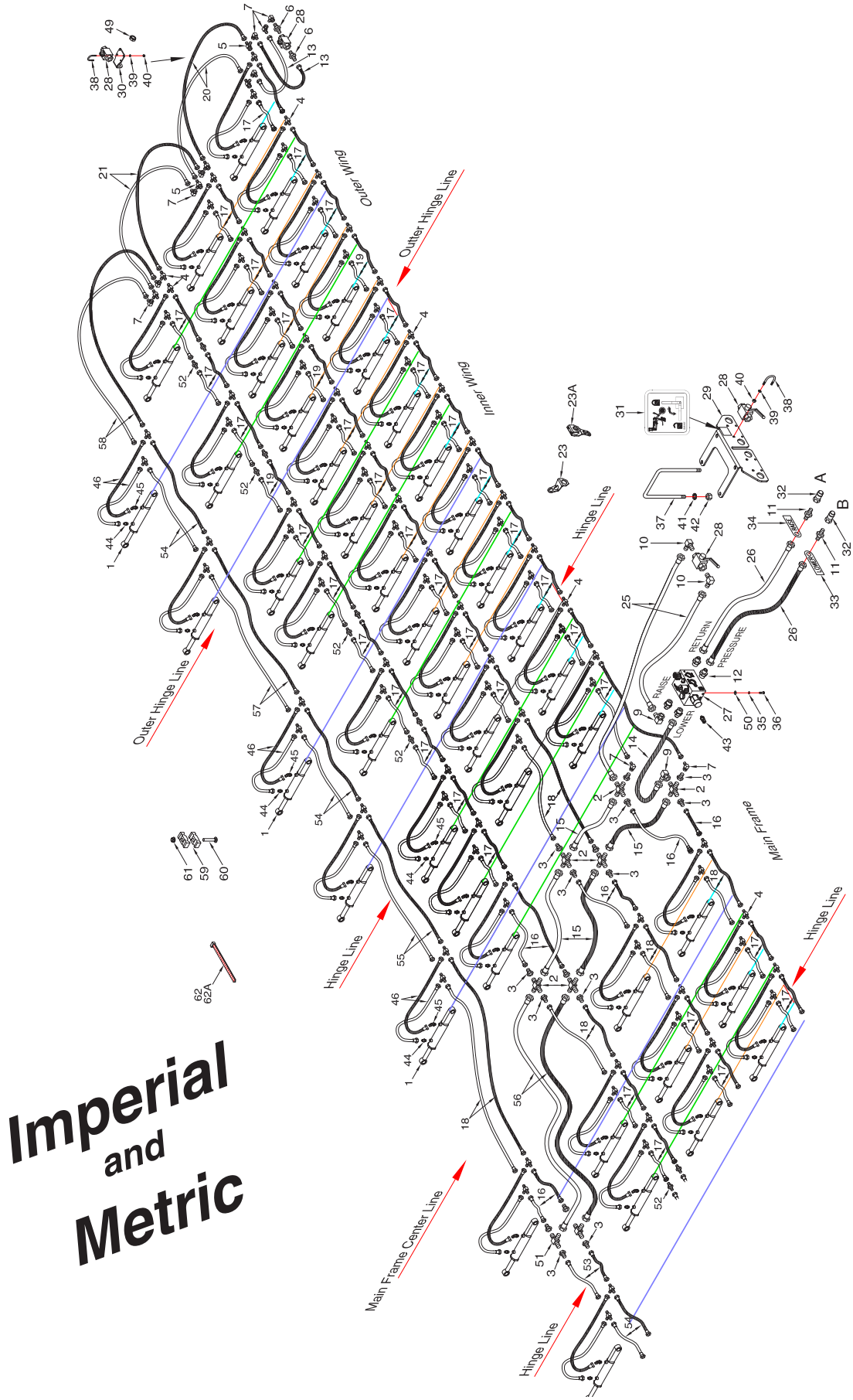

Imperial and Metric

Four Rank Hydraulic Option - 10 inch - 60 ft

Item	Part No.	Description	Qty
1	* * * * *	Cylinder - Row Unit	72
2	C-4401	Cross - (4) 7/8-14 MJIC	6
3	F10384	Reducer - 7/8-14 MJIC x 9/16-18 MJIC - 4 for 4th Rank	18
4	C-4393	Tee - 9/16-18 MJIC - 2 for 4th Rank	144
5	C-4403	Tee - (2) 9/16-18 MJIC x (1) 9/16-18 FJIC (MMF) - 4 for 4th Rank	8
6	C15348	Connector - 9/16-18 MJIC x 3/4-16 MORB	4
7	S29967	90 Elbow - 9/16-18 FJIC x 9/16-18 MJIC - 4 for 4th Rank	20
8	F-3867	90 Elbow - 9/16-18 (#06) MJIC	2
9	K-5806	90 Elbow - 7/8-14 FJIC x 7/8-14 MJIC	2
10	C24585	90 Elbow - 7/8-14 MJIC x 3/4-16 MORB	2
11	C14840	Connector - 7/8-14 MJIC x 3/4-16 MORB	2
12	N47903	Connector - 7/8-14 (#10) MJIC x 1 1/16-12 (#12) MORB	4
13	S66243	Hyd Hose - 1/4 x 22 Lg w/9/16-18 FJIC - Bleed-Off Valve	4
14	S66755	Hyd Hose - 1/2 x 30 Lg - #10 7/8-14 FJIC Swivel Ends	1
15	S66758	Hyd Hose - 1/2 x 34 Lg - #10 7/8-14 FJIC Swivel Ends	4
16	S47973	Hyd Hose - 3/8 x 20 Lg - #6 9/16-18 FJIC	10
17	S42967	Hyd Hose - 3/8 x 30Lg - #6 9/16-18 FJIC	122
18	S65670	Hyd Hose - 3/8 x 42 Lg - #6 9/16-18 FJIC	10
19	S65670	Hyd Hose - 3/8 x 42 Lg - #6 9/16-18 FJIC - Outer Hinge Line	12
20	S65407	Hyd Hose - 3/8 x 72 Lg - #6 9/16-18 FJIC Ends - 18m	4
	S47799	Hyd Hose - 3/8 x 60 Lg - #6 9/16-18 FJIC Ends - **60 ft**	4
21	S66438	Hyd Hose - 3/8 x 92 Lg - #6 9/16-18 FJIC Ends - 18m	4
	S65397	Hyd Hose - 3/8 x 80 Lg - #6 9/16-18 FJIC Ends - **60 ft**	4
22	S65420	Hyd Hose - 3/8 x 126 Lg - #6 9/16-18 FJIC Ends - Not required with 4th Row Kit	2
23	S66245	Hose Holder - Opener	66
23A	S67170	Hose Holder - Opener - Low Profile	6
24	S68415	Hose Holder Loop - Outer Hinge Line	4
25	S65668	Hyd Hose - 3/4 x 120 Lg - #10 7/8-14 FJIC Ends	2
26	S58157	Hyd Hose - 3/4 x 330 Lg - #10 7/8-14 FJIC Ends	2
27	S68006	Manifold - Opener Control	1
28	N42880	Lock Valve - 2 Way Ball	3
28A	N42881	Handle - Valve	1
29	S65129	Valve Mounting Plate	1
30	S66754	Mount Plate - Ball Valve	2
31	S65157	Decal ISO - Openers Lock	1
32	N34443	Male Tip - 3/4-16 MORB - Series B	2
33	S29959	Tag - Hose ID - Depth Control - LOWER	1
34	S29958	Tag - Hose ID - Depth Control - RAISE	1
35	W-523	Lockwasher - 3/8 ... (Valve Block)	4
36	W-475	Hex Bolt - 3/8 x 1 Lg ....(Valve Block)	4
37	H25628	U-Bolt - 1/2 x 6 x 9 3/8 Lg	2
38	N34319	U-Bolt - 1/4 x 1 1/2 x 2	4
39	W-521	Lockwasher - 1/4	8
40	W-512	Hex Nut - 1/4	8
41	W-525	Lockwasher - 1/2	4
42	W-516	Hex Nut - 1/2	4
43	K62977	Pressure Transducer	1
44	N29358	Connector - 9/16-18 (#06) MJIC x 9/16-18 (#06) MORB (1 per Opener)	72
45	N19578	45 Elbow - 9/16-18 (#06) MJIC x 9/16-18 (#06) MORB (1 per Opener)	72
46	S66243	Hyd Hose - 1/4 x 22 Lg - #6 9/16-18 FJIC Ends (High Flex) (2 per Opener)	148
47	W-475	Hex Bolt - 3/8 x 1 Lg - Outer Hinge Line	4
48	D-5279	Locknut - 3/8 Serrated - Outer Hinge Line	4
49	S-711	Hex Jam Nut - 1	2
50	W-538	Flatwasher - 7/16 ID x 1 OD x 14 GA ... (Valve Block)	4
51	C-4394	Tee - (3) 7/8-14 MJIC	2
52	H18269	Connector - 9/16-18 (#06) MJIC	16
53	S65437	Hyd Hose - 3/8 x 54 Lg - #6 9/16-18 FJIC	2
54	S47799	Hyd Hose - 3/8 x 60 Lg - #6 9/16-18 FJIC	8
55	S65397	Hyd Hose - 3/8 x 80 Lg - #6 9/16-18 FJIC	2
56	H-4408	Hyd Hose - 1/2 x 84 Lg w/7/8-14 FJIC	2
57	S65409	Hyd Hose - 3/8 x 108 Lg - 9/16-18 FJIC Ends	4
58	S66436	Hyd Hose - 3/8 x 86 Lg - #6 9/16-18 FJIC Ends	4
59	C-4698	Oil Line Clamp	12
60	W14501	Carriage Bolt - 3/8 x 2 1/4 Lg	6
61	S27987	Locknut - 3/8 Flanged Centre Lock	6
62	S13336	Nylon Tie Strap - 3/8 x 24 Lg	16
62A	D-4838	Nylon Tie Strap - 5/16 x 14 1/2 Lg	8

Imperial and Metric

Four Rank Hydraulic Option - 10 inch Spacing - 70 ft Model

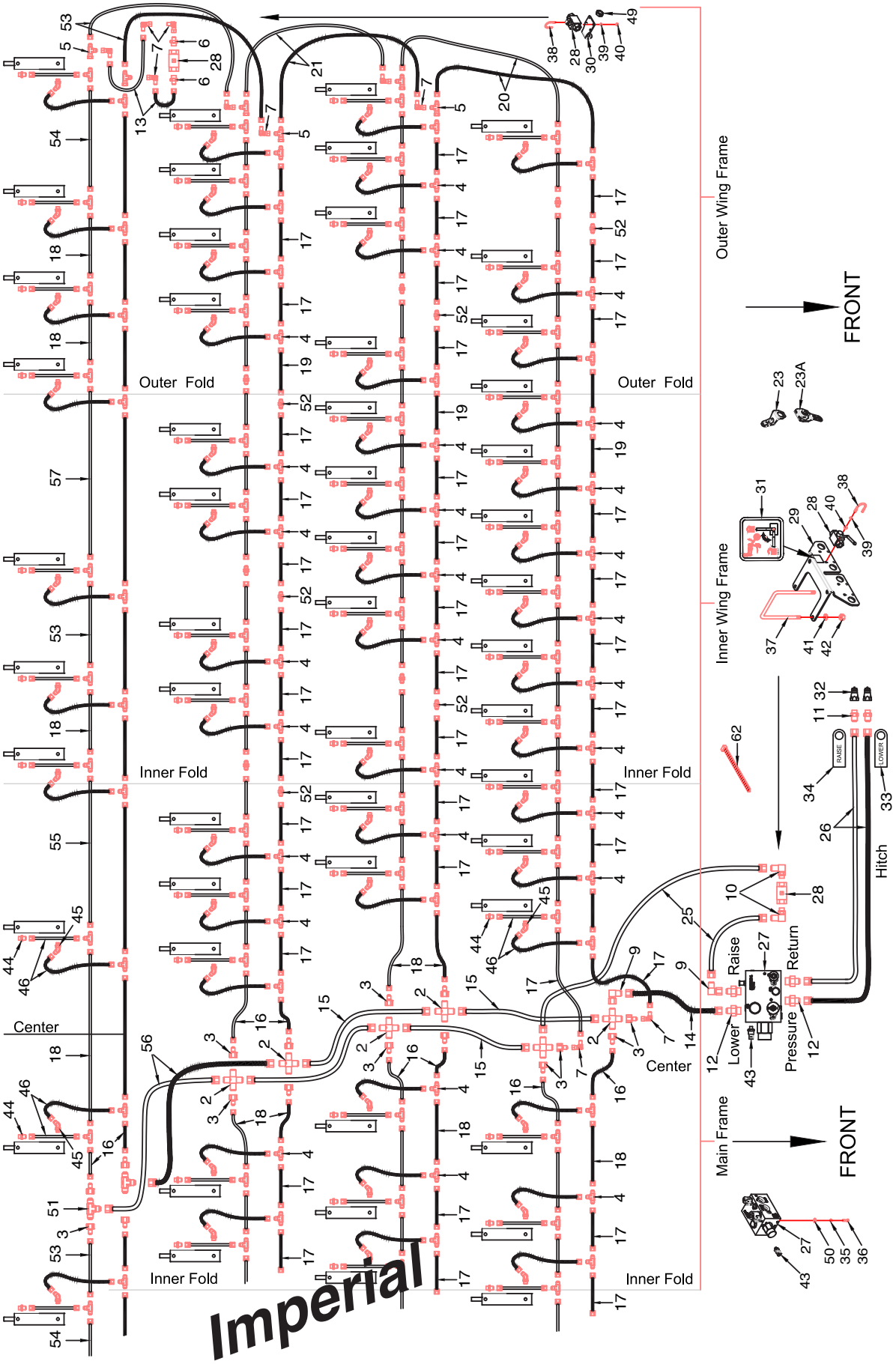

Four Rank Hydraulic Option - 10 inch Spacing - 70 ft

Item	Part No.	Description	Qty
1	* * * * *	Cylinder - Row Unit	84
2	C-4401	Cross - (4) 7/8-14 MJIC	6
3	F10384	Reducer - 7/8-14 MJIC x 9/16-18 MJIC - 4 for 4th Rank	18
4	C-4393	Tee - 9/16-18 MJIC - 2 for 4th Rank	168
5	C-4403	Tee - (2) 9/16-18 MJIC x (1) 9/16-18 FJIC (MMF) - 4 for 4th Rank	8
6	C15348	Connector - 9/16-18 MJIC x 3/4-16 MORB	4
7	S29967	90 Elbow - 9/16-18 FJIC x 9/16-18 MJIC - 4 for 4th Rank	20
8	F-3867	90 Elbow - 9/16-18 (#06) MJIC	2
9	K-5806	90 Elbow - 7/8-14 FJIC x 7/8-14 MJIC	2
10	C24585	90 Elbow - 7/8-14 MJIC x 3/4-16 MORB	2
11	C14840	Connector - 7/8-14 MJIC x 3/4-16 MORB	2
12	N47903	Connector - 7/8-14 (#10) MJIC x 1 1/16-12 (#12) MORB	4
13	S66243	Hyd Hose - 1/4 x 22 Lg w/9/16-18 FJIC - Bleed-Off Valve	4
14	S66755	Hyd Hose - 1/2 x 30 Lg - #10 7/8-14 FJIC Swivel Ends	1
15	S66758	Hyd Hose - 1/2 x 34 Lg - #10 7/8-14 FJIC Swivel Ends	4
16	S47973	Hyd Hose - 3/8 x 20 Lg - #6 9/16-18 FJIC	10
17	S42967	Hyd Hose - 3/8 x 30Lg - #6 9/16-18 FJIC	146
18	S65670	Hyd Hose - 3/8 x 42 Lg - #6 9/16-18 FJIC	18
19	S65670	Hyd Hose - 3/8 x 42 Lg - #6 9/16-18 FJIC - Outer Hinge Line	12
20	S65407	Hyd Hose - 3/8 x 72 Lg - #6 9/16-18 FJIC Ends - 21m	4
	S47799	Hyd Hose - 3/8 x 60 Lg - #6 9/16-18 FJIC Ends - **70 ft**	4
21	S66438	Hyd Hose - 3/8 x 92 Lg - #6 9/16-18 FJIC Ends - 21m	4
	S65397	Hyd Hose - 3/8 x 80 Lg - #6 9/16-18 FJIC Ends - **70 ft**	4
22	S65420	Hyd Hose - 3/8 x 126 Lg - #6 9/16-18 FJIC Ends - Not required with 4th Row Kit	2
23	S66245	Hose Holder - Opener	78
23A	S67170	Hose Holder - Opener - Low Profile	6
24	S68415	Hose Holder Loop - Outer Hinge Line	4
25	S65668	Hyd Hose - 3/4 x 120 Lg - #10 7/8-14 FJIC Ends	2
26	S58157	Hyd Hose - 3/4 x 330 Lg - #10 7/8-14 FJIC Ends	2
27	S68006	Manifold - Opener Control	1
28	N42880	Lock Valve - 2 Way Ball	3
28A	N42881	Handle - Valve	1
29	S65129	Valve Mounting Plate	1
30	S66754	Mount Plate - Ball Valve	2
31	S65157	Decal ISO - Openers Lock	1
32	N34443	Male Tip - 3/4-16 MORB - Series B	2
33	S29959	Tag - Hose ID - Depth Control - LOWER	1
34	S29958	Tag - Hose ID - Depth Control - RAISE	1
35	W-523	Lockwasher - 3/8 ... (Valve Block)	4
36	W-475	Hex Bolt - 3/8 x 1 Lg ....(Valve Block)	4
37	H25628	U-Bolt - 1/2 x 6 x 9 3/8 Lg	2
38	N34319	U-Bolt - 1/4 x 1 1/2 x 2	4
39	W-521	Lockwasher - 1/4	8
40	W-512	Hex Nut - 1/4	8
41	W-525	Lockwasher - 1/2	4
42	W-516	Hex Nut - 1/2	4
43	K62977	Pressure Transducer	1
44	N29358	Connector - 9/16-18 (#06) MJIC x 9/16-18 (#06) MORB (1 per Opener)	84
45	N19578	45 Elbow - 9/16-18 (#06) MJIC x 9/16-18 (#06) MORB (1 per Opener)	84
46	S66243	Hyd Hose - 1/4 x 22 Lg - #6 9/16-18 FJIC Ends (High Flex) (2 per Opener)	172
47	W-475	Hex Bolt - 3/8 x 1 Lg - Outer Hinge Line	4
48	D-5279	Locknut - 3/8 Serrated - Outer Hinge Line	4
49	S-711	Hex Jam Nut - 1	2
50	W-538	Flatwasher - 7/16 ID x 1 OD x 14 GA ... (Valve Block)	4
51	C-4394	Tee - (3) 7/8-14 MJIC	2
52	H18269	Connector - 9/16-18 (#06) MJIC	24
53	S65437	Hyd Hose - 3/8 x 54 Lg - #6 9/16-18 FJIC	6
54	S47799	Hyd Hose - 3/8 x 60 Lg - #6 9/16-18 FJIC	4
55	S65397	Hyd Hose - 3/8 x 80 Lg - #6 9/16-18 FJIC	2
56	H-4408	Hyd Hose - 1/2 x 84 Lg w/7/8-14 FJIC	2
57	S65409	Hyd Hose - 3/8 x 108 Lg - 9/16-18 FJIC Ends	4
58	S44353	Hyd Hose - 3/8 x 48 Lg - #6 9/16-18 FJIC Ends	12
59	C-4698	Oil Line Clamp	12
60	W14501	Carriage Bolt - 3/8 x 2 1/4 Lg	6
61	S27987	Locknut - 3/8 Flanged Centre Lock	6
62	S13336	Nylon Tie Strap - 3/8 x 24 Lg	16
62A	D-4838	Nylon Tie Strap - 5/16 x 14 1/2 Lg	8

Imperial

Four Rank Hydraulic Option - 10 inch Spacing - 80 ft Model

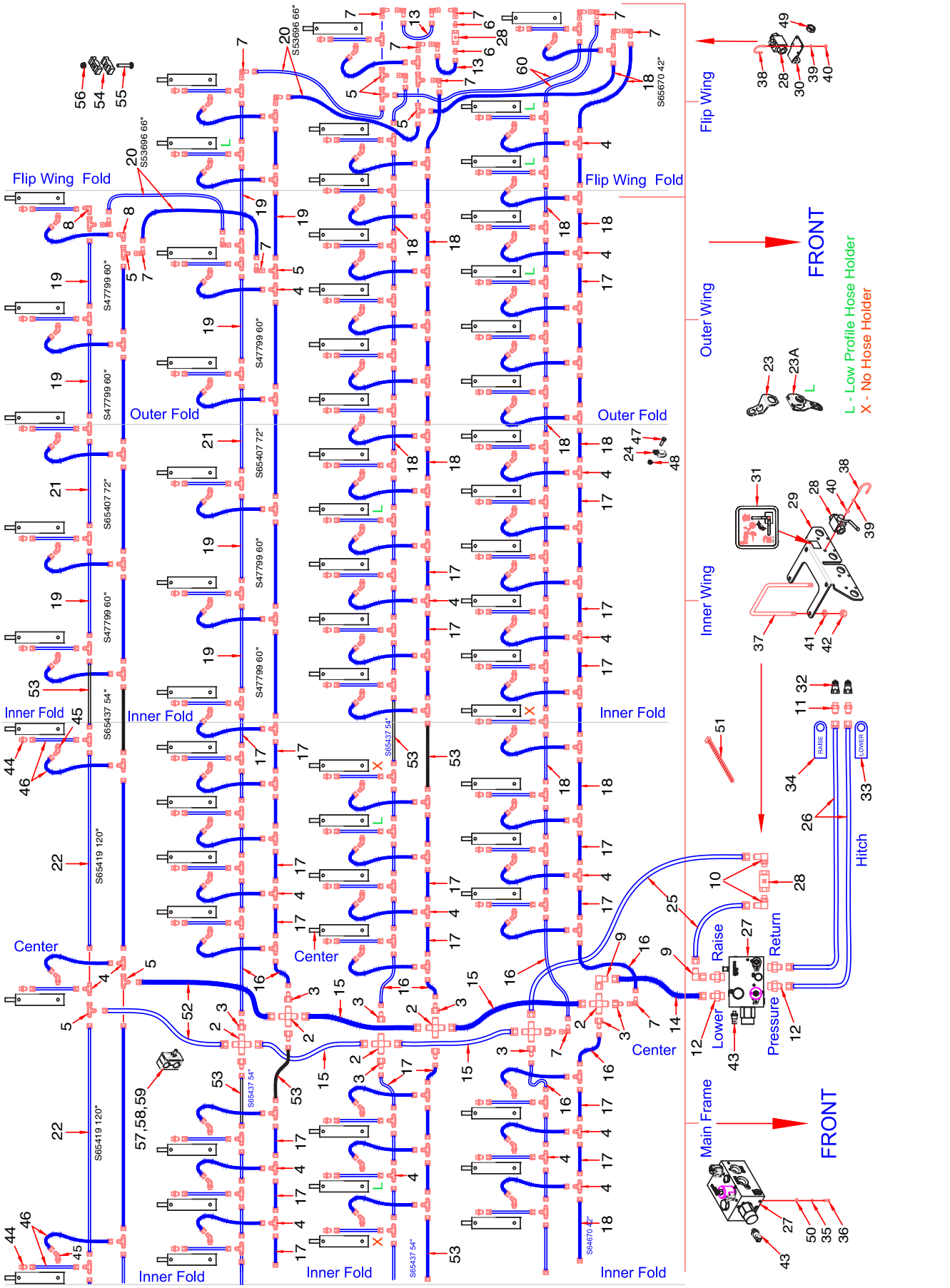

Four Rank Hydraulic Option - 10 inch Spacing - 80 ft			
Item	**Part No.**	**Description**	**Qty**
1	* * * * *	Cylinder - Row Unit	97
2	C-4401	Cross - (4) 7/8-14 MJIC	6
3	F10384	Reducer - 7/8-14 MJIC x 9/16-18 MJIC	12
4	C-4393	Tee - 9/16-18 MJIC	190
5	C-4403	Tee - (2) 9/16-18 MJIC x (1) 9/16-18 FJIC (MMF)	18
6	C15348	Connector - 9/16-18 MJIC x 3/4-16 MORB	4
7	S29967	90 Elbow - 9/16-18 FJIC x 9/16-18 MJIC - (G73216-10) (G73219-16)	38
8	F-3867	90 Elbow - 9/16-18 (#06) MJIC	4
9	K-5806	90 Elbow - 7/8-14 FJIC x 7/8-14 MJIC	2
10	C24585	90 Elbow - 7/8-14 MJIC x 3/4-16 MORB	2
11	C14840	Connector - 7/8-14 MJIC x 3/4-16 MORB	2
12	N47903	Connector - 7/8-14 (#10) MJIC x 1 1/16-12 (#12) MORB	4
13	S66243	Hyd Hose - 1/4 x 22 Lg w/9/16-18 FJIC - Bleed-Off Valve	4
14	S66755	Hyd Hose - 1/2 x 30 Lg - #10 7/8-14 FJIC Swivel Ends	1
15	S66758	Hyd Hose - 1/2 x 34 Lg - #10 7/8-14 FJIC Swivel Ends	4
16	S47973	Hyd Hose - 3/8 x 20 Lg - #6 9/16-18 FJIC	8
17	S42967	Hyd Hose - 3/8 x 30 Lg - #6 9/16-18 FJIC	106
18	S65670	Hyd Hose - 3/8 x 42 Lg - #6 9/16-18 FJIC	24
19	S47799	Hyd Hose - 3/8 x 60 Lg - #6 9/16-18 FJIC	28
20	N53696	Hyd Hose - 3/8 x 66 Lg - 9/16-18 FJIC	8
21	S65407	Hyd Hose - 3/8 x 72 Lg - 9/16-18 FJIC Ends	8
22	S65419	Hyd Hose - 3/8 x 120 Lg - #6 9/16-18 FJIC Ends	4
23	S66245	Hose Holder - Opener	81
23A	S67170	Hose Holder - Opener - Low Profile	12
24	S68415	Hose Holder Loop - Outer Hinge Line	4
25	S65668	Hyd Hose - 3/4 x 120 Lg - #10 7/8-14 FJIC Ends	2
26	S58157	Hyd Hose - 3/4 x 330 Lg - #10 7/8-14 FJIC Ends	2
27	S68006	Manifold - Opener Control	1
28	N42880	Lock Valve - 2 Way Ball	3
28A	N42881	Handle - Valve	1
29	S65129	Valve Mounting Plate	1
30	S66754	Mount Plate - Ball Valve	2
31	S65157	Decal ISO - Openers Lock	1
32	N34443	Male Tip - 3/4-16 MORB - Series B	2
33	S29959	Tag - Hose ID - Depth Control - LOWER	1
34	S29958	Tag - Hose ID - Depth Control - RAISE	1
35	W-523	Lockwasher - 3/8 ... (Valve Block)	4
36	W-475	Hex Bolt - 3/8 x 1 Lg ....(Valve Block)	4
37	H25628	U-Bolt - 1/2 x 6 x 9 3/8 Lg	2
38	N34319	U-Bolt - 1/4 x 1 1/2 x 2	4
39	W-521	Lockwasher - 1/4	8
40	W-512	Hex Nut - 1/4	8
41	W-525	Lockwasher - 1/2	4
42	W-516	Hex Nut - 1/2	4
43	K62977	Pressure Transducer	1
44	N29358	Connector - 9/16-18 (#06) MJIC x 9/16-18 (#06) MORB (1 per Opener)	97
45	N19578	45 Elbow - 9/16-18 (#06) MJIC x 9/16-18 (#06) MORB (1 per Opener)	97
46	S66243	Hyd Hose - 1/4 x 22 Lg - #6 9/16-18 FJIC Ends (High Flex) (2 per Opener)	194
47	W-475	Hex Bolt - 3/8 x 1 Lg - Outer Hinge Line	4
48	D-5279	Locknut - 3/8 Serrated - Outer Hinge Line	4
49	S-711	Hex Jam Nut - 1	2
50	W-538	Flatwasher - 7/16 ID x 1 OD x 14 GA ... (Valve Block)	4
51	D-4951	Nylon Tie Strap - 3/16 x 7 1/2 Lg	97
52	S73390	Hyd Hose - 1/2 x 52 Lg - #10 7/8-14 FJIC x #6 9/16-18 FJIC Swivel Ends	2
53	S65437	Hyd Hose - 3/8 x 54 Lg - #6 9/16-18 FJIC Ends - Flip Wing Hinge Line	10
54	C-4698	Oil Line Clamp	28
55	W14501	Carriage Bolt - 3/8 x 2 1/4 Lg	14
56	S27987	Locknut - 3/8 Flanged Centre Lock	14
57	11740	Plastic Hose Clamp Assembly - 13/16	3
58	S66015	Carriage Bolt - 5/16 X 3 Lg	3
59	C32925	Locknut - 5/16 Center	3
60	**S65437**	**Hyd Hose - 3/8 x 54 Lg - #6 9/16-18 FJIC Ends**	**4**

Four Rank Hydraulic Option - 12 inch Spacing - 40 ft Model

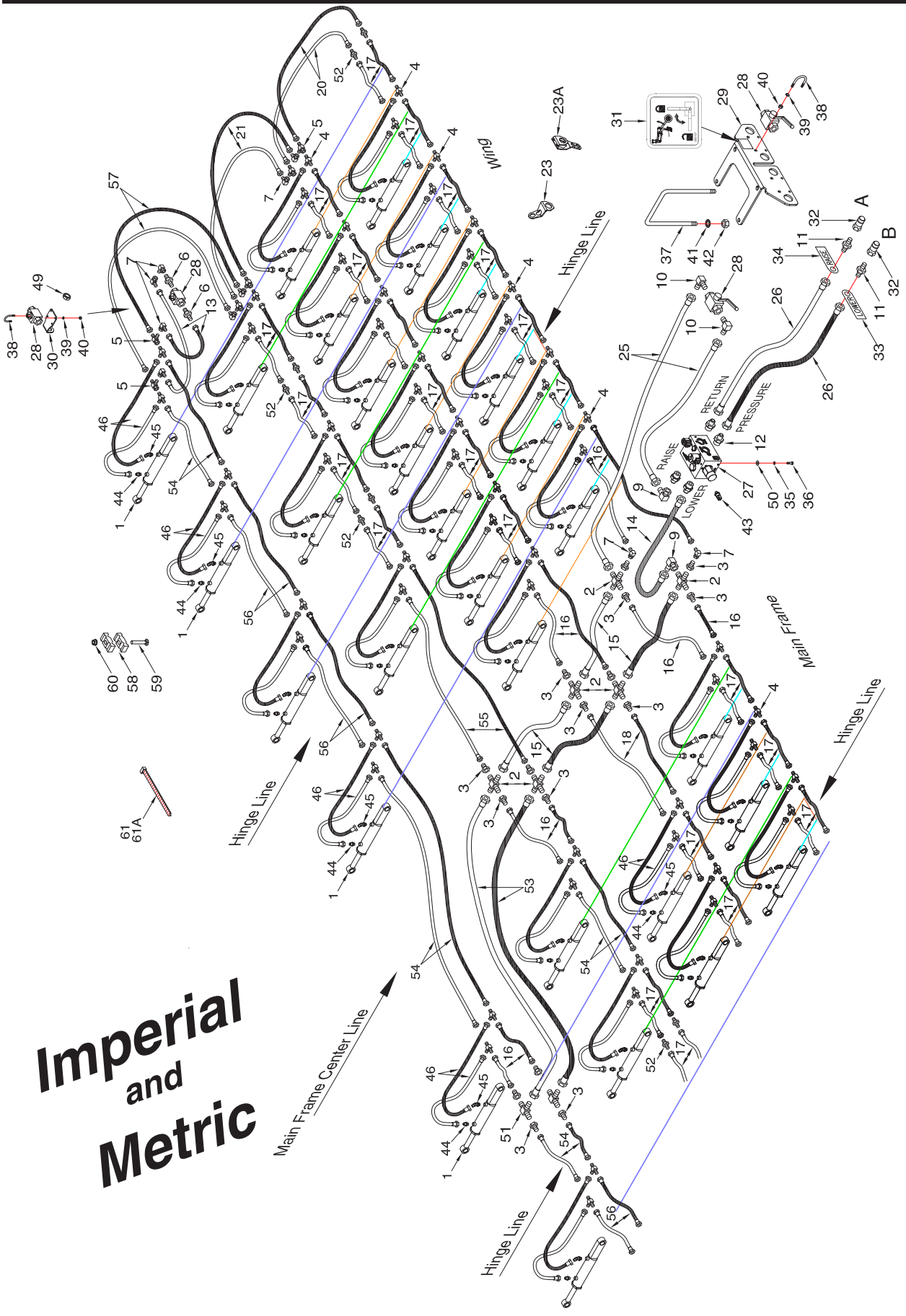

Four Rank Hydraulic Option - 12 inch Spacing - 40 ft

Item	Part No.	Description	Qty
1	* * * * *	Cylinder - Row Unit	40
2	C-4401	Cross - (4) 7/8-14 MJIC	6
3	F10384	Reducer - 7/8-14 MJIC x 9/16-18 MJIC - 4 for 4th Rank	18
4	C-4393	Tee - 9/16-18 MJIC	82
5	C-4403	Tee - (2) 9/16-18 MJIC x (1) 9/16-18 FJIC (MMF) - 4 for 4th Rank	12
6	C15348	Connector - 9/16-18 MJIC x 3/4-16 MORB	4
7	S29967	90 Elbow - 9/16-18 FJIC x 9/16-18 MJIC - 4 for 4th Rank	20
8	F-3867	90 Elbow - 9/16-18 (#06) MJIC	2
9	K-5806	90 Elbow - 7/8-14 FJIC x 7/8-14 MJIC	2
10	C24585	90 Elbow - 7/8-14 MJIC x 3/4-16 MORB	2
11	C14840	Connector - 7/8-14 MJIC x 3/4-16 MORB	2
12	N47903	Connector - 7/8-14 (#10) MJIC x 1 1/16-12 (#12) MORB	4
13	S66243	Hyd Hose - 1/4 x 22 Lg w/9/16-18 FJIC - Bleed-Off Valve	4
14	S66755	Hyd Hose - 1/2 x 30 Lg - #10 7/8-14 FJIC Swivel Ends	1
15	S66758	Hyd Hose - 1/2 x 34 Lg - #10 7/8-14 FJIC Swivel Ends	4
16	S47973	Hyd Hose - 3/8 x 20 Lg - #6 9/16-18 FJIC - 4 for 4th Rank	10
17	S42969	Hyd Hose - 3/8 x 36 Lg - #6 9/16-18 FJIC	70
18	S65670	Hyd Hose - 3/8 x 42 Lg - #6 9/16-18 FJIC	2
19	S44353	Hyd Hose - 3/8 x 48 Lg - #6 9/16-18 FJIC - Outer Hinge Line	14
20	S65407	Hyd Hose - 3/8 x 72 Lg - #6 9/16-18 FJIC Ends - 12m	4
	N53696	Hyd Hose - 3/8 x 66 Lg - #6 9/16-18 FJIC Ends - **40 ft**	4
21	N48126	Hyd Hose - 3/8 x 76 Lg - #6 9/16-18 FJIC Ends - 12m	4
	N53696	Hyd Hose - 3/8 x 66 Lg - #6 9/16-18 FJIC Ends - **40 ft**	4
22	S65420	Hyd Hose - 3/8 x 126 Lg - #6 9/16-18 FJIC Ends - Not required with 4th Row Kit	2
23	S66245	Hose Holder - Opener	38
23A	S67170	Hose Holder - Opener - Low Profile	6
24	S68415	Hose Holder Loop - Outer Hinge Line	4
25	S65668	Hyd Hose - 3/4 x 120 Lg - #10 7/8-14 FJIC Ends	2
26	S58157	Hyd Hose - 3/4 x 330 Lg - #10 7/8-14 FJIC Ends	2
27	S68006	Manifold - Opener Control	1
28	N42880	Lock Valve - 2 Way Ball	3
28A	N42881	Handle - Valve	1
29	S65129	Valve Mounting Plate	1
30	S66754	Mount Plate - Ball Valve	2
31	S65157	Decal ISO - Openers Lock	1
32	N34443	Male Tip - 3/4-16 MORB - Series B	2
33	S29959	Tag - Hose ID - Depth Control - LOWER	1
34	S29958	Tag - Hose ID - Depth Control - RAISE	1
35	W-523	Lockwasher - 3/8 ... (Valve Block)	4
36	W-475	Hex Bolt - 3/8 x 1 Lg ....(Valve Block)	4
37	H25628	U-Bolt - 1/2 x 6 x 9 3/8 Lg	2
38	N34319	U-Bolt - 1/4 x 1 1/2 x 2	4
39	W-521	Lockwasher - 1/4	8
40	W-512	Hex Nut - 1/4	8
41	W-525	Lockwasher - 1/2	4
42	W-516	Hex Nut - 1/2	4
43	K62977	Pressure Transducer	1
44	N29358	Connector - 9/16-18 (#06) MJIC x 9/16-18 (#06) MORB (1 per Opener)	40
45	N19578	45 Elbow - 9/16-18 (#06) MJIC x 9/16-18 (#06) MORB (1 per Opener)	40
46	S66243	Hyd Hose - 1/4 x 22 Lg - #6 9/16-18 FJIC Ends (High Flex) (2 per Opener)	84
47	W-475	Hex Bolt - 3/8 x 1 Lg - Outer Hinge Line	4
48	D-5279	Locknut - 3/8 Serrated - Outer Hinge Line	4
49	S-711	Hex Jam Nut - 1	2
50	W-538	Flatwasher - 7/16 ID x 1 OD x 14 GA ... (Valve Block)	4
51	C-4394	Tee - (3) 7/8-14 MJIC	2
52	H18269	Connector - 9/16-18 (#06) MJIC	12
53	H-4408	Hyd Hose - 1/2 x 84 Lg w/7/8-14 FJIC	2
54	S47799	Hyd Hose - 3/8 x 60 Lg - #6 9/16-18 FJIC	10
55	N53696	Hyd Hose - 3/8 x 66 Lg - 9/16-18 FJIC	2
56	S65407	Hyd Hose - 3/8 x 72 Lg - 9/16-18 FJIC Ends	6
57	S65437	Hyd Hose - 3/8 x 54 Lg - #6 9/16-18 FJIC	4
58	C-4698	Oil Line Clamp	8
59	W14501	Carriage Bolt - 3/8 x 2 1/4 Lg	4
60	S27987	Locknut - 3/8 Flanged Centre Lock	4
61	S13336	Nylon Tie Strap - 3/8 x 24 Lg	12
61A	D-4838	Nylon Tie Strap - 5/16 x 14 1/2 Lg	6

Imperial and Metric

Four Rank Hydraulic Option - 12 inch Spacing - 50 ft Model

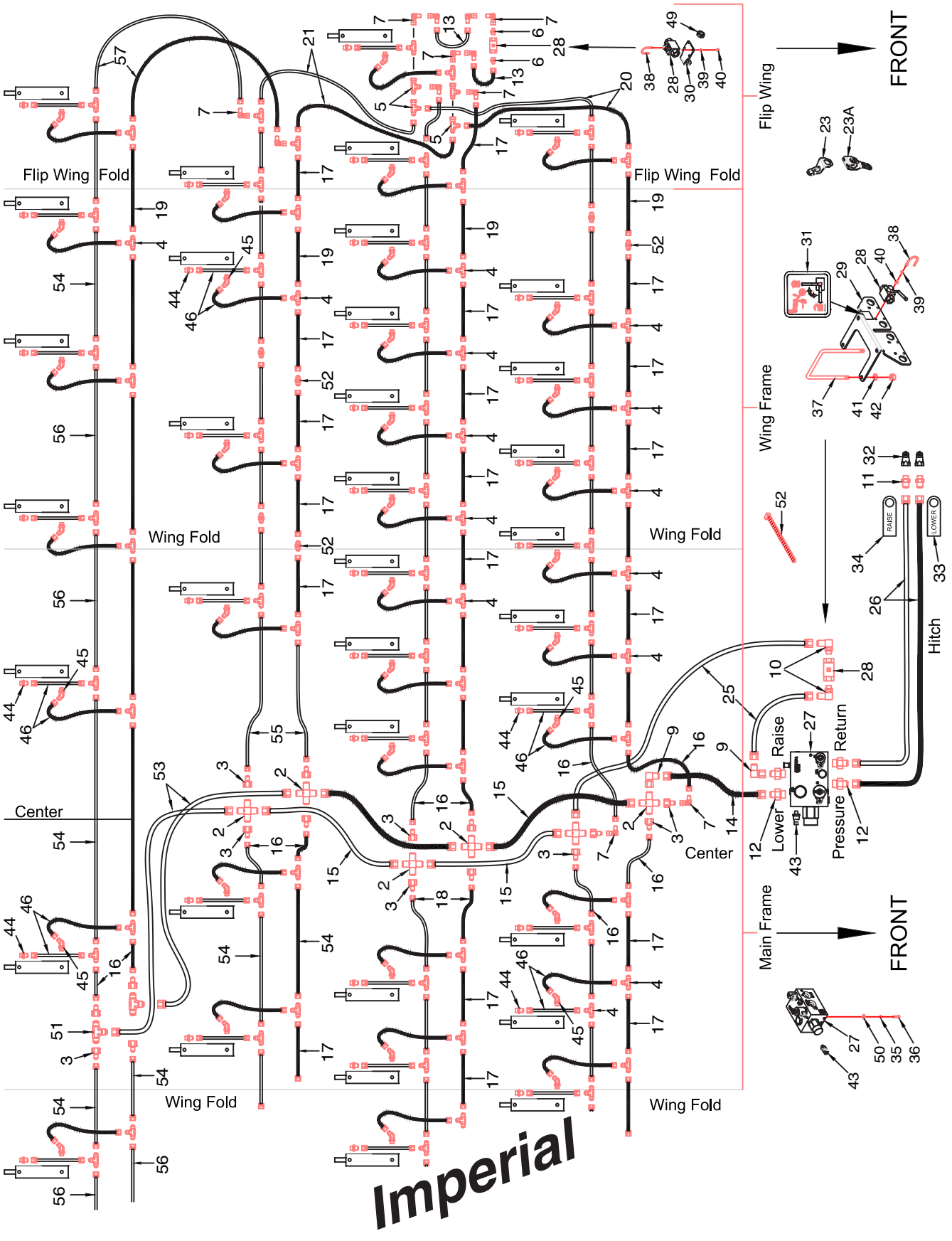

Four Rank Hydraulic Option - 12 inch Spacing - 50 ft

Item	Part No.	Description	Qty
1	* * * * *	Cylinder - Row Unit	50
2	C-4401	Cross - (4) 7/8-14 MJIC	6
3	F10384	Reducer - 7/8-14 MJIC x 9/16-18 MJIC - 4 for 4th Rank	18
4	C-4393	Tee - 9/16-18 MJIC - 6 for 4th Rank	104
5	C-4403	Tee - (2) 9/16-18 MJIC x (1) 9/16-18 FJIC (MMF) - 4 for 4th Rank	12
6	C15348	Connector - 9/16-18 MJIC x 3/4-16 MORB	4
7	S29967	90 Elbow - 9/16-18 FJIC x 9/16-18 MJIC - 4 for 4th Rank	20
8	F-3867	90 Elbow - 9/16-18 (#06) MJIC	2
9	K-5806	90 Elbow - 7/8-14 FJIC x 7/8-14 MJIC	2
10	C24585	90 Elbow - 7/8-14 MJIC x 3/4-16 MORB	2
11	C14840	Connector - 7/8-14 MJIC x 3/4-16 MORB	2
12	N47903	Connector - 7/8-14 (#10) MJIC x 1 1/16-12 (#12) MORB	4
13	S66243	Hyd Hose - 1/4 x 22 Lg w/9/16-18 FJIC - Bleed-Off Valve	4
14	S66755	Hyd Hose - 1/2 x 30 Lg - #10 7/8-14 FJIC Swivel Ends	1
15	S66758	Hyd Hose - 1/2 x 34 Lg - #10 7/8-14 FJIC Swivel Ends	4
16	S47973	Hyd Hose - 3/8 x 20 Lg - #6 9/16-18 FJIC - 4 for 4th Rank	10
17	S42969	Hyd Hose - 3/8 x 36 Lg - #6 9/16-18 FJIC	78
18	S65670	Hyd Hose - 3/8 x 42 Lg - #6 9/16-18 FJIC	2
19	S44353	Hyd Hose - 3/8 x 48 Lg - #6 9/16-18 FJIC - Outer Hinge Line	16
20	N48126	Hyd Hose - 3/8 x 76 Lg - #6 9/16-18 FJIC Ends - **50 ft**	4
21	N53696	Hyd Hose - 3/8 x 66 Lg - #6 9/16-18 FJIC Ends - **50 ft**	4
22	S65420	Hyd Hose - 3/8 x 126 Lg - #6 9/16-18 FJIC Ends - Not required with 4th Row Kit	2
23	S66245	Hose Holder - Opener	48
23A	S67170	Hose Holder - Opener - Low Profile	6
24	S68415	Hose Holder Loop - Outer Hinge Line	4
25	S65668	Hyd Hose - 3/4 x 120 Lg - #10 7/8-14 FJIC Ends	2
26	S58157	Hyd Hose - 3/4 x 330 Lg - #10 7/8-14 FJIC Ends	2
27	S68006	Manifold - Opener Control	1
28	N42880	Lock Valve - 2 Way Ball	3
28A	N42881	Handle - Valve	1
29	S65129	Valve Mounting Plate	1
30	S66754	Mount Plate - Ball Valve	2
31	S65157	Decal ISO - Openers Lock	1
32	N34443	Male Tip - 3/4-16 MORB - Series B	2
33	S29959	Tag - Hose ID - Depth Control - LOWER	1
34	S29958	Tag - Hose ID - Depth Control - RAISE	1
35	W-523	Lockwasher - 3/8 ... (Valve Block)	4
36	W-475	Hex Bolt - 3/8 x 1 Lg ....(Valve Block)	4
37	H25628	U-Bolt - 1/2 x 6 x 9 3/8 Lg	2
38	N34319	U-Bolt - 1/4 x 1 1/2 x 2	4
39	W-521	Lockwasher - 1/4	8
40	W-512	Hex Nut - 1/4	8
41	W-525	Lockwasher - 1/2	4
42	W-516	Hex Nut - 1/2	4
43	K62977	Pressure Transducer	1
44	N29358	Connector - 9/16-18 (#06) MJIC x 9/16-18 (#06) MORB (1 per Opener)	50
45	N19578	45 Elbow - 9/16-18 (#06) MJIC x 9/16-18 (#06) MORB (1 per Opener)	50
46	S66243	Hyd Hose - 1/4 x 22 Lg - #6 9/16-18 FJIC Ends (High Flex) (2 per Opener)	104
47	W-475	Hex Bolt - 3/8 x 1 Lg - Outer Hinge Line	4
48	D-5279	Locknut - 3/8 Serrated - Outer Hinge Line	4
49	S-711	Hex Jam Nut - 1	2
50	W-538	Flatwasher - 7/16 ID x 1 OD x 14 GA ... (Valve Block)	4
51	C-4394	Tee - (3) 7/8-14 MJIC	2
52	H18269	Connector - 9/16-18 (#06) MJIC	12
53	H-4408	Hyd Hose - 1/2 x 84 Lg w/7/8-14 FJIC	2
54	S47799	Hyd Hose - 3/8 x 60 Lg - #6 9/16-18 FJIC	10
55	N53696	Hyd Hose - 3/8 x 66 Lg - 9/16-18 FJIC	2
56	S65407	Hyd Hose - 3/8 x 72 Lg - 9/16-18 FJIC Ends	6
57	S65397	Hyd Hose - 3/8 x 80 Lg - #6 9/16-18 FJIC	4
58	C-4698	Oil Line Clamp	8
59	W14501	Carriage Bolt - 3/8 x 2 1/4 Lg	4
60	S27987	Locknut - 3/8 Flanged Centre Lock	4
61	S13336	Nylon Tie Strap - 3/8 x 24 Lg	12
61A	D-4838	Nylon Tie Strap - 5/16 x 14 1/2 Lg	6

Imperial

Four Rank Hydraulic Option - 12 inch Spacing - 60 ft Model

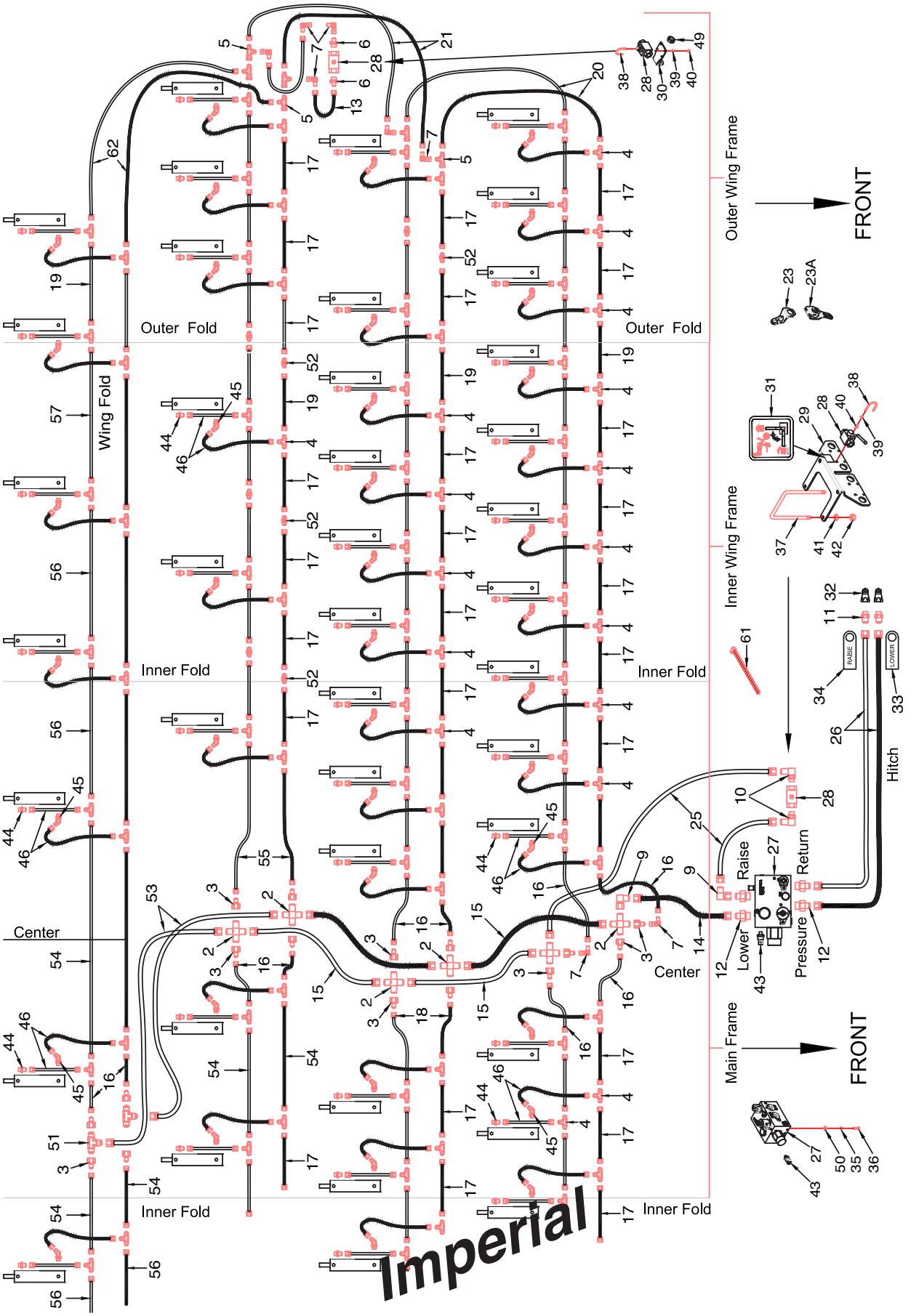

Four Rank Hydraulic Option - 12 inch Spacing - 60 ft

Item	Part No.	Description	Qty
1	* * * * *	Cylinder - Row Unit	60
2	C-4401	Cross - (4) 7/8-14 MJIC	6
3	F10384	Reducer - 7/8-14 MJIC x 9/16-18 MJIC - 4 for 4th Rank	18
4	C-4393	Tee - 9/16-18 MJIC - 6 for 4th Rank	124
5	C-4403	Tee - (2) 9/16-18 MJIC x (1) 9/16-18 FJIC (MMF) - 4 for 4th Rank	12
6	C15348	Connector - 9/16-18 MJIC x 3/4-16 MORB	4
7	S29967	90 Elbow - 9/16-18 FJIC x 9/16-18 MJIC - 4 for 4th Rank	20
8	F-3867	90 Elbow - 9/16-18 (#06) MJIC	2
9	K-5806	90 Elbow - 7/8-14 FJIC x 7/8-14 MJIC	2
10	C24585	90 Elbow - 7/8-14 MJIC x 3/4-16 MORB	2
11	C14840	Connector - 7/8-14 MJIC x 3/4-16 MORB	2
12	N47903	Connector - 7/8-14 (#10) MJIC x 1 1/16-12 (#12) MORB	4
13	S66243	Hyd Hose - 1/4 x 22 Lg w/9/16-18 FJIC - Bleed-Off Valve	4
14	S66755	Hyd Hose - 1/2 x 30 Lg - #10 7/8-14 FJIC Swivel Ends	1
15	S66758	Hyd Hose - 1/2 x 34 Lg - #10 7/8-14 FJIC Swivel Ends	4
16	S47973	Hyd Hose - 3/8 x 20 Lg - #6 9/16-18 FJIC - 4 for 4th Rank	10
17	S42969	Hyd Hose - 3/8 x 36 Lg - #6 9/16-18 FJIC	98
18	S65670	Hyd Hose - 3/8 x 42 Lg - #6 9/16-18 FJIC	2
19	S44353	Hyd Hose - 3/8 x 48 Lg - #6 9/16-18 FJIC - Outer Hinge Line	16
20	S66436	Hyd Hose - 3/8 x 86 Lg - #6 9/16-18 FJIC Ends - 60ft	4
21	N48126	Hyd Hose - 3/8 x 76 Lg - #6 9/16-18 FJIC Ends - 60 ft	4
22	S65420	Hyd Hose - 3/8 x 126 Lg - #6 9/16-18 FJIC Ends - Not required with 4th Row Kit	2
23	S66245	Hose Holder - Opener	54
23A	S67170	Hose Holder - Opener - Low Profile	6
24	S68415	Hose Holder Loop - Outer Hinge Line	4
25	S65668	Hyd Hose - 3/4 x 120 Lg - #10 7/8-14 FJIC Ends	2
26	S58157	Hyd Hose - 3/4 x 330 Lg - #10 7/8-14 FJIC Ends	2
27	S68006	Manifold - Opener Control	1
28	N42880	Lock Valve - 2 Way Ball	3
28A	N42881	Handle - Valve	1
29	S65129	Valve Mounting Plate	1
30	S66754	Mount Plate - Ball Valve	2
31	S65157	Decal ISO - Openers Lock	1
32	N34443	Male Tip - 3/4-16 MORB - Series B	2
33	S29959	Tag - Hose ID - Depth Control - LOWER	1
34	S29958	Tag - Hose ID - Depth Control - RAISE	1
35	W-523	Lockwasher - 3/8 ... (Valve Block)	4
36	W-475	Hex Bolt - 3/8 x 1 Lg ....(Valve Block)	4
37	H25628	U-Bolt - 1/2 x 6 x 9 3/8 Lg	2
38	N34319	U-Bolt - 1/4 x 1 1/2 x 2	4
39	W-521	Lockwasher - 1/4	8
40	W-512	Hex Nut - 1/4	8
41	W-525	Lockwasher - 1/2	4
42	W-516	Hex Nut - 1/2	4
43	K62977	Pressure Transducer	1
44	N29358	Connector - 9/16-18 (#06) MJIC x 9/16-18 (#06) MORB (1 per Opener)	60
45	N19578	45 Elbow - 9/16-18 (#06) MJIC x 9/16-18 (#06) MORB (1 per Opener)	60
46	S66243	Hyd Hose - 1/4 x 22 Lg - #6 9/16-18 FJIC Ends (High Flex) (2 per Opener)	124
47	W-475	Hex Bolt - 3/8 x 1 Lg - Outer Hinge Line	4
48	D-5279	Locknut - 3/8 Serrated - Outer Hinge Line	4
49	S-711	Hex Jam Nut - 1	2
50	W-538	Flatwasher - 7/16 ID x 1 OD x 14 GA ... (Valve Block)	4
51	C-4394	Tee - (3) 7/8-14 MJIC	2
52	H18269	Connector - 9/16-18 (#06) MJIC	12
53	H-4408	Hyd Hose - 1/2 x 84 Lg w/7/8-14 FJIC	2
54	S47799	Hyd Hose - 3/8 x 60 Lg - #6 9/16-18 FJIC	6
55	N53696	Hyd Hose - 3/8 x 66 Lg - 9/16-18 FJIC	2
56	S65407	Hyd Hose - 3/8 x 72 Lg - 9/16-18 FJIC Ends	14
57	S66438	Hyd Hose - 3/8 x 92 Lg - #6 9/16-18 FJIC	4
58	C-4698	Oil Line Clamp	12
59	W14501	Carriage Bolt - 3/8 x 2 1/4 Lg	6
60	S27987	Locknut - 3/8 Flanged Centre Lock	6
61	S13336	Nylon Tie Strap - 3/8 x 24 Lg	16
61A	D-4838	Nylon Tie Strap - 5/16 x 14 1/2 Lg	8
62	S65409	Hyd Hose - 3/8 x 108 Lg- #6 9/16-18 FJIC Ends - 60 ft	4

Imperial

Four Rank Hydraulic Option - 12 inch Spacing - 70 ft Model

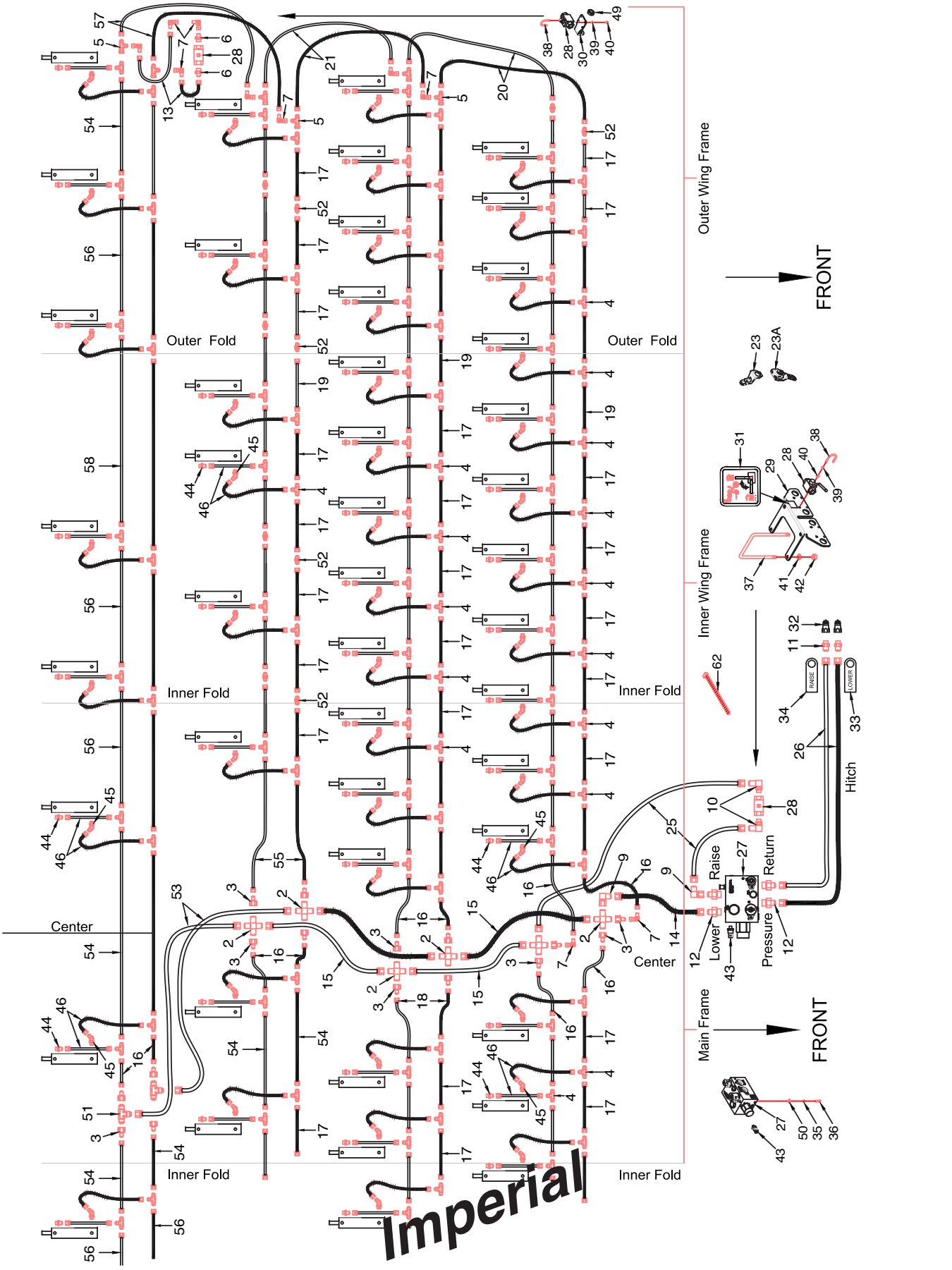

Four Rank Hydraulic Option - 12 inch Spacing - 70 ft

Item	Part No.	Description	Qty
1	* * * * *	Cylinder - Row Unit	70
2	C-4401	Cross - (4) 7/8-14 MJIC	6
3	F10384	Reducer - 7/8-14 MJIC x 9/16-18 MJIC - 4 for 4th Rank	18
4	C-4393	Tee - 9/16-18 MJIC - 2 for 4th Rank	140
5	C-4403	Tee - (2) 9/16-18 MJIC x (1) 9/16-18 FJIC (MMF) - 4 for 4th Rank	12
6	C15348	Connector - 9/16-18 MJIC x 3/4-16 MORB	4
7	S29967	90 Elbow - 9/16-18 FJIC x 9/16-18 MJIC - 4 for 4th Rank	20
8	F-3867	90 Elbow - 9/16-18 (#06) MJIC	2
9	K-5806	90 Elbow - 7/8-14 FJIC x 7/8-14 MJIC	2
10	C24585	90 Elbow - 7/8-14 MJIC x 3/4-16 MORB	2
11	C14840	Connector - 7/8-14 MJIC x 3/4-16 MORB	2
12	N47903	Connector - 7/8-14 (#10) MJIC x 1 1/16-12 (#12) MORB	4
13	S66243	Hyd Hose - 1/4 x 22 Lg w/9/16-18 FJIC - Bleed-Off Valve	4
14	S66755	Hyd Hose - 1/2 x 30 Lg - #10 7/8-14 FJIC Swivel Ends	1
15	S66758	Hyd Hose - 1/2 x 34 Lg - #10 7/8-14 FJIC Swivel Ends	4
16	S47973	Hyd Hose - 3/8 x 20 Lg - #6 9/16-18 FJIC - 4 for 4th Rank	10
17	S42969	Hyd Hose - 3/8 x 36 Lg - #6 9/16-18 FJIC	118
18	S65670	Hyd Hose - 3/8 x 42 Lg - #6 9/16-18 FJIC	2
19	S44353	Hyd Hose - 3/8 x 48 Lg - #6 9/16-18 FJIC - Outer Hinge Line - 4 for 4th Rank	16
20	N53696	Hyd Hose - 3/8 x 66 Lg - #6 9/16-18 FJIC Ends - 70 ft	4
21	S66436	Hyd Hose - 3/8 x 86 Lg - #6 9/16-18 FJIC Ends - 70 ft	4
22	S65420	Hyd Hose - 3/8 x 126 Lg - #6 9/16-18 FJIC Ends - Not required with 4th Row Kit	2
23	S66245	Hose Holder - Opener	64
23A	S67170	Hose Holder - Opener - Low Profile	6
24	S68415	Hose Holder Loop - Outer Hinge Line	4
25	S65668	Hyd Hose - 3/4 x 120 Lg - #10 7/8-14 FJIC Ends	2
26	S58157	Hyd Hose - 3/4 x 330 Lg - #10 7/8-14 FJIC Ends	2
27	S68006	Manifold - Opener Control	1
28	N42880	Lock Valve - 2 Way Ball	3
28A	N42881	Handle - Valve	1
29	S65129	Valve Mounting Plate	1
30	S66754	Mount Plate - Ball Valve	2
31	S65157	Decal ISO - Openers Lock	1
32	N34443	Male Tip - 3/4-16 MORB - Series B	2
33	S29959	Tag - Hose ID - Depth Control - LOWER	1
34	S29958	Tag - Hose ID - Depth Control - RAISE	1
35	W-523	Lockwasher - 3/8 ... (Valve Block)	4
36	W-475	Hex Bolt - 3/8 x 1 Lg ....(Valve Block)	4
37	H25628	U-Bolt - 1/2 x 6 x 9 3/8 Lg	2
38	N34319	U-Bolt - 1/4 x 1 1/2 x 2	4
39	W-521	Lockwasher - 1/4	8
40	W-512	Hex Nut - 1/4	8
41	W-525	Lockwasher - 1/2	4
42	W-516	Hex Nut - 1/2	4
43	K62977	Pressure Transducer	1
44	N29358	Connector - 9/16-18 (#06) MJIC x 9/16-18 (#06) MORB (1 per Opener)	70
45	N19578	45 Elbow - 9/16-18 (#06) MJIC x 9/16-18 (#06) MORB (1 per Opener)	70
46	S66243	Hyd Hose - 1/4 x 22 Lg - #6 9/16-18 FJIC Ends (High Flex) (2 per Opener)	144
47	W-475	Hex Bolt - 3/8 x 1 Lg - Outer Hinge Line	4
48	D-5279	Locknut - 3/8 Serrated - Outer Hinge Line	4
49	S-711	Hex Jam Nut - 1	2
50	W-538	Flatwasher - 7/16 ID x 1 OD x 14 GA ... (Valve Block)	4
51	C-4394	Tee - (3) 7/8-14 MJIC	2
52	H18269	Connector - 9/16-18 (#06) MJIC	**16**
53	H-4408	Hyd Hose - 1/2 x 84 Lg w/7/8-14 FJIC	2
54	S47799	Hyd Hose - 3/8 x 60 Lg - #6 9/16-18 FJIC	**10**
55	N53696	Hyd Hose - 3/8 x 66 Lg - 9/16-18 FJIC	2
56	S65407	Hyd Hose - 3/8 x 72 Lg - 9/16-18 FJIC	**12**
57	S65437	Hyd Hose - 3/8 x 54 Lg - #6 9/16-18 FJIC	4
58	**S65419**	**Hyd Hose - 3/8 x 120 Lg - #6 9/16-18 FJIC - 70 ft**	**4**
59	C-4698	Oil Line Clamp	12
60	W14501	Carriage Bolt - 3/8 x 2 1/4 Lg	6
61	S27987	Locknut - 3/8 Flanged Centre Lock	6
62	S13336	Nylon Tie Strap - 3/8 x 24 Lg	16
62A	D-4838	Nylon Tie Strap - 5/16 x 14 1/2 Lg	8

Imperial

Four Rank Hydraulic Option - 12 inch Spacing - 80 ft Model

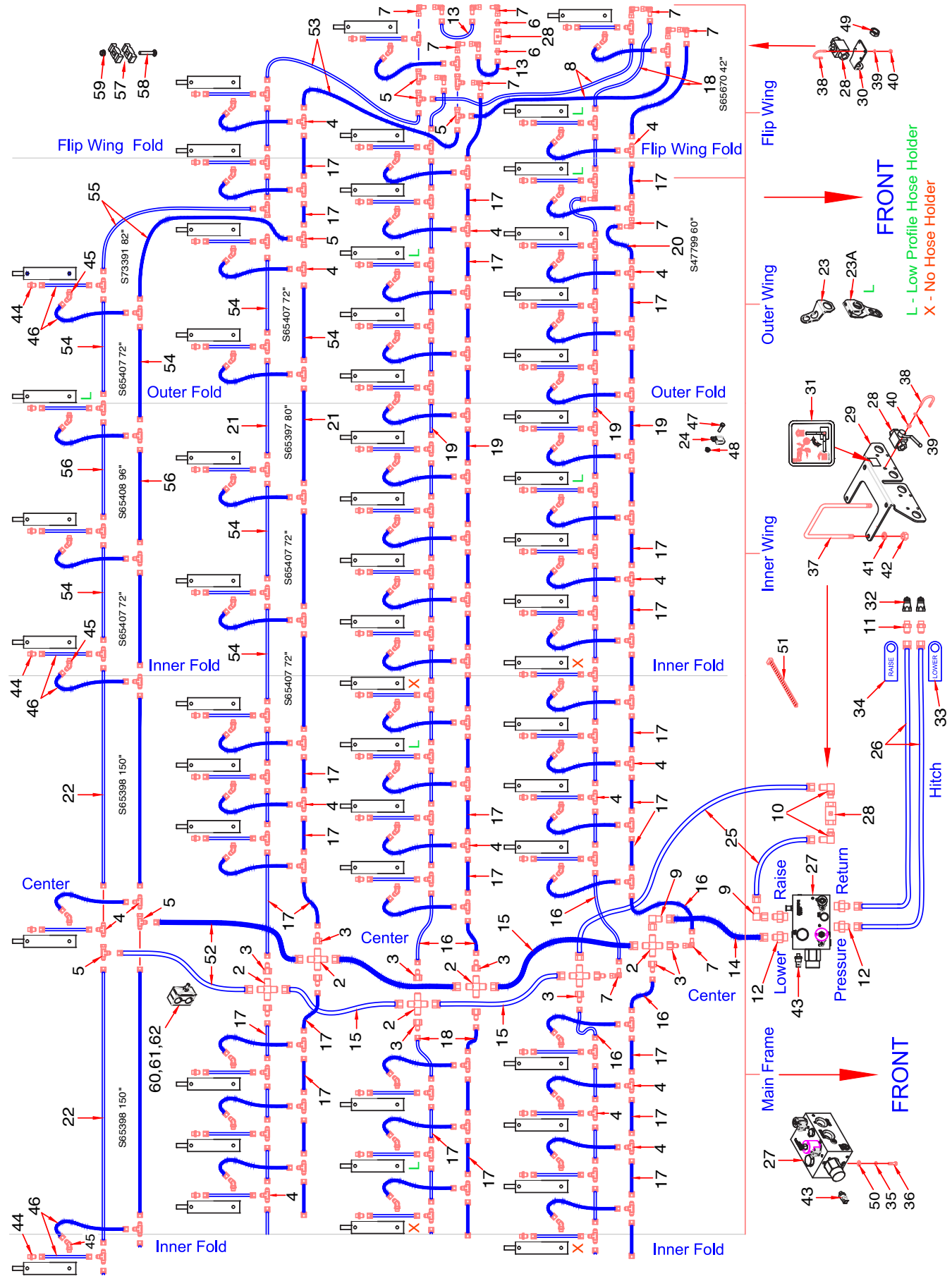

Four Rank Hydraulic Option - 12 inch Spacing - 80 ft

Item	Part No.	Description	Qty
1	* * * * *	Cylinder - Row Unit	82
2	C-4401	Cross - (4) 7/8-14 MJIC	6
3	**F10384**	**Reducer - 7/8-14 MJIC x 9/16-18 MJIC**	**12**
4	C-4393	Tee - 9/16-18 MJIC	164
5	**C-4403**	**Tee - (2) 9/16-18 MJIC x (1) 9/16-18 FJIC (MMF) -**	**14**
6	C15348	Connector - 9/16-18 MJIC x 3/4-16 MORB	4
7	S29967	90 Elbow - 9/16-18 FJIC x 9/16-18 MJIC - (G73216-10) (G73218-16)	30
8	**S65437**	**Hyd Hose - 3/8 x 54 Lg - #6 9/16-18 FJIC Ends**	**4**
9	K-5806	90 Elbow - 7/8-14 FJIC x 7/8-14 MJIC	2
10	C24585	90 Elbow - 7/8-14 MJIC x 3/4-16 MORB	2
11	C14840	Connector - 7/8-14 MJIC x 3/4-16 MORB	2
12	N47903	Connector - 7/8-14 (#10) MJIC x 1 1/16-12 (#12) MORB	4
13	S66243	Hyd Hose - 1/4 x 22 Lg w/9/16-18 FJIC - Bleed-Off Valve	4
14	S66755	Hyd Hose - 1/2 x 30 Lg - #10 7/8-14 FJIC Swivel Ends	1
15	S66758	Hyd Hose - 1/2 x 34 Lg - #10 7/8-14 FJIC Swivel Ends	4
16	**S47973**	**Hyd Hose - 3/8 x 20 Lg - #6 9/16-18 FJIC**	**6**
17	S42969	Hyd Hose - 3/8 x 36 Lg - #6 9/16-18 FJIC	104
18	**S65670**	**Hyd Hose - 3/8 x 42 Lg - #6 9/16-18 FJIC**	**6**
19	S44353	Hyd Hose - 3/8 x 48 Lg - #6 9/16-18 FJIC - Outer Hinge Line	8
20	**S47799**	**Hyd Hose - 3/8 x 60 Lg w/ #6 9/16-18 FJIC Ends - Flip Wing Hinge Front Rank**	**4**
21	S65397	Hyd Hose - 3/8 x 80 Lg - 9/16-18 FJIC Ends	4
22	S65398	Hyd Hose - 3/8 x 150 Lg - #6 9/16-18 FJIC Ends	4
23	S66245	Hose Holder - Opener	66
23A	S67170	Hose Holder - Opener - Low Profile	12
24	S68415	Hose Holder Loop - Outer Hinge Line	4
25	S65668	Hyd Hose - 3/4 x 120 Lg - #10 7/8-14 FJIC Ends	2
26	S58157	Hyd Hose - 3/4 x 330 Lg - #10 7/8-14 FJIC Ends	2
27	S68006	Manifold - Opener Control	1
28	N42880	Lock Valve - 2 Way Ball	3
28A	N42881	Handle - Valve	1
29	S65129	Valve Mounting Plate	1
30	S66754	Mount Plate - Ball Valve	2
31	S65157	Decal ISO - Openers Lock	1
32	N34443	Male Tip - 3/4-16 MORB - Series B	2
33	S29959	Tag - Hose ID - Depth Control - LOWER	1
34	S29958	Tag - Hose ID - Depth Control - RAISE	1
35	W-523	Lockwasher - 3/8 ... (Valve Block)	4
36	W-475	Hex Bolt - 3/8 x 1 Lg ....(Valve Block)	4
37	H25628	U-Bolt - 1/2 x 6 x 9 3/8 Lg	2
38	N34319	U-Bolt - 1/4 x 1 1/2 x 2	4
39	W-521	Lockwasher - 1/4	8
40	W-512	Hex Nut - 1/4	8
41	W-525	Lockwasher - 1/2	4
42	W-516	Hex Nut - 1/2	4
43	K62977	Pressure Transducer	1
44	N29358	Connector - 9/16-18 (#06) MJIC x 9/16-18 (#06) MORB (1 per Opener)	82
45	N19578	45 Elbow - 9/16-18 (#06) MJIC x 9/16-18 (#06) MORB (1 per Opener)	82
46	S66243	Hyd Hose - 1/4 x 22 Lg - #6 9/16-18 FJIC Ends (High Flex) (2 per Opener)	164
47	W-475	Hex Bolt - 3/8 x 1 Lg - Outer Hinge Line	4
48	D-5279	Locknut - 3/8 Serrated - Outer Hinge Line	4
49	S-711	Hex Jam Nut - 1	2
50	W-538	Flatwasher - 7/16 ID x 1 OD x 14 GA ... (Valve Block)	4
51	D-4951	Nylon Tie Strap - 3/16 x 7 1/2 Lg	82
52	**S73390**	**Hyd Hose - 1/2 x 52 Lg - #10 7/8-14 FJIC x #6 9/16-18 FJIC Swivel Ends**	**2**
53	**N53696**	**Hyd Hose - 3/8 x 66 Lg - 9/16-18 FJIC**	**4**
54	**S65407**	**Hyd Hose - 3/8 x 72 Lg - 9/16-18 FJIC Ends**	**20**
55	**S73391**	**Hyd Hose - 3/8 x 82 Lg - #6 9/16-18 FJIC Swivel Ends**	**4**
56	S65408	Hyd Hose - 3/8 x 96 Lg - #6 9/16-18 FJIC	4
57	C-4698	Oil Line Clamp	28
58	W14501	Carriage Bolt - 3/8 x 2 1/4 Lg	14
59	S27987	Locknut - 3/8 Flanged Centre Lock	14
60	11740	Plastic Hose Clamp Assembly - 13/16	3
61	S66015	Carriage Bolt - 5/16 X 3 Lg	3
62	C32925	Locknut - 5/16 Center	3

Accumulator Hydraulic Option
Option 1 - Single Large Accumulator

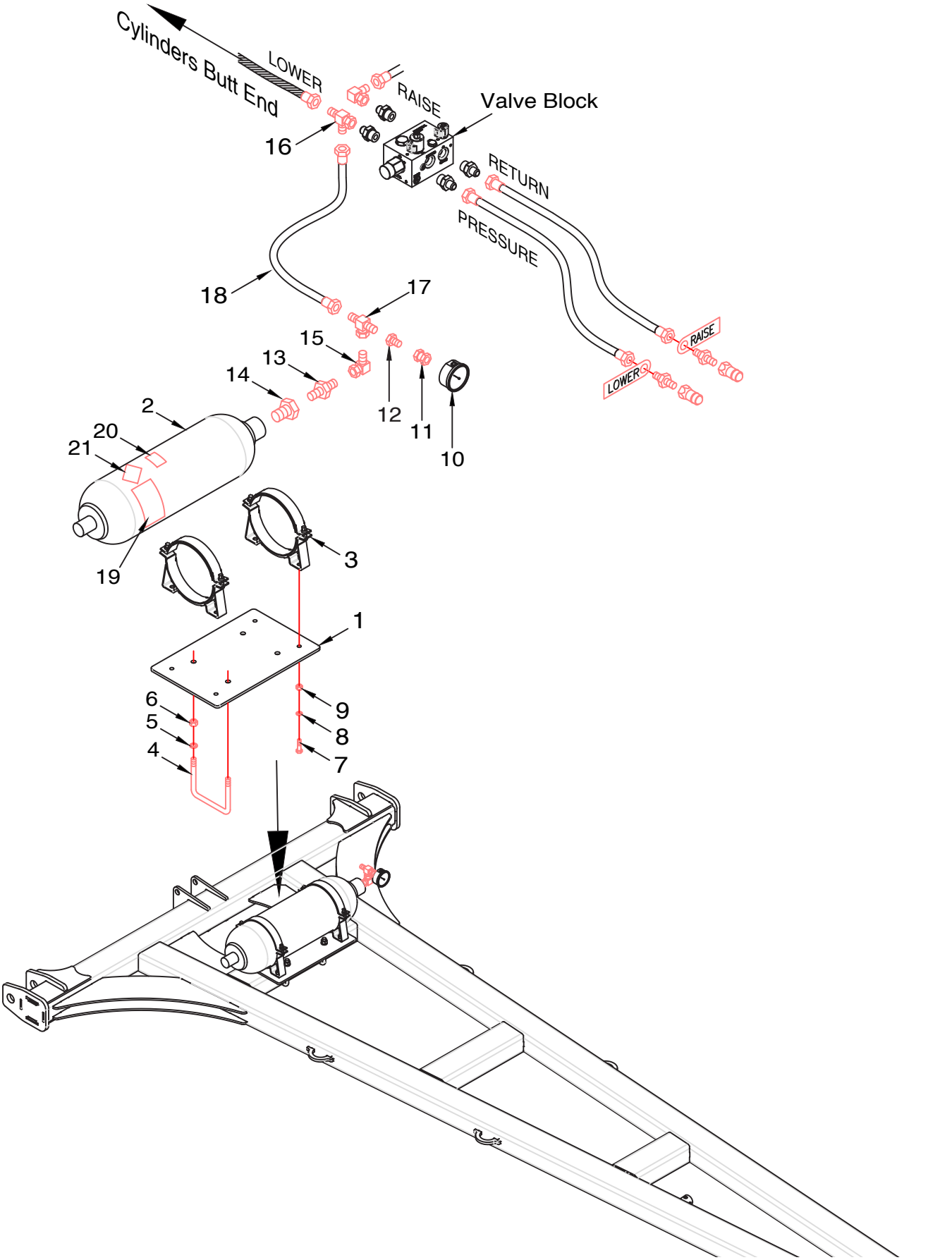

Accumulator Hydraulic Option - Option 1

Item	Part No.	Description	Qty
1	S68230	Mount Plate - Accumulator	1
2	S47095	Accumulator - 5 Gallon	1
3	C42313	Clamp - Accumulator	2
4	F-4642	U-Bolt - 5/8 x 6 x 5 1/2 UL	2
5	W-526	Lockwasher - 5/8	4
6	W-517	Hex Nut - 5/8	4
7	W-485	Hex Bolt - 1/2 x 1 1/4 Lg	4
8	W-525	Lockwasher - 1/2	4
9	W-516	Hex Nut - 1/2	4
10	S48845	Pressure Gauge - 2 1/2 DIA with 1/4 NPT	1
11	S42998	Connector - 1/4 FNPT x 9/16-18 FJIC	1
12	F10384	Connector - 9/16-18 MJIC x 7/8-14 FJIC	1
13	C42312	Connector - 7/8-14 MJIC x 1 5/16-14 MORB	1
14	C42311	Connector - 1 7/8-14 MORB x 1 5/16-14 FORB	1
15	K-5806	90 Elbow - Swivel - 7/8-14 MJIC x 7/8-14 FJIC	1
16	H18746	Tee - Swivel - (2) 7/8-14 MJIC x (1) 7/8-14 FJIC (MMF)	1
17	F24559	Tee - (1) 7/8-14 FJIC x (2) 7/8-14 MJIC (MFM)	1
18	H-4410	Hyd Hose - 1/2 x 96 Lg W/7/8-14 FJIC	1
19	C-4262	Decal - Warning - Pressure Hazard	1
20	S44930	Decal - Pre-Charged Dry Nitrogen	1
21	S44932	Decal - Compressed Nitrogen - UN1066	1
	S68142	Accumulator Kit - QUANTUM (Includes all items above)	

Accumulator Hydraulic Option
Option 2 - Multiple Small Accumulators

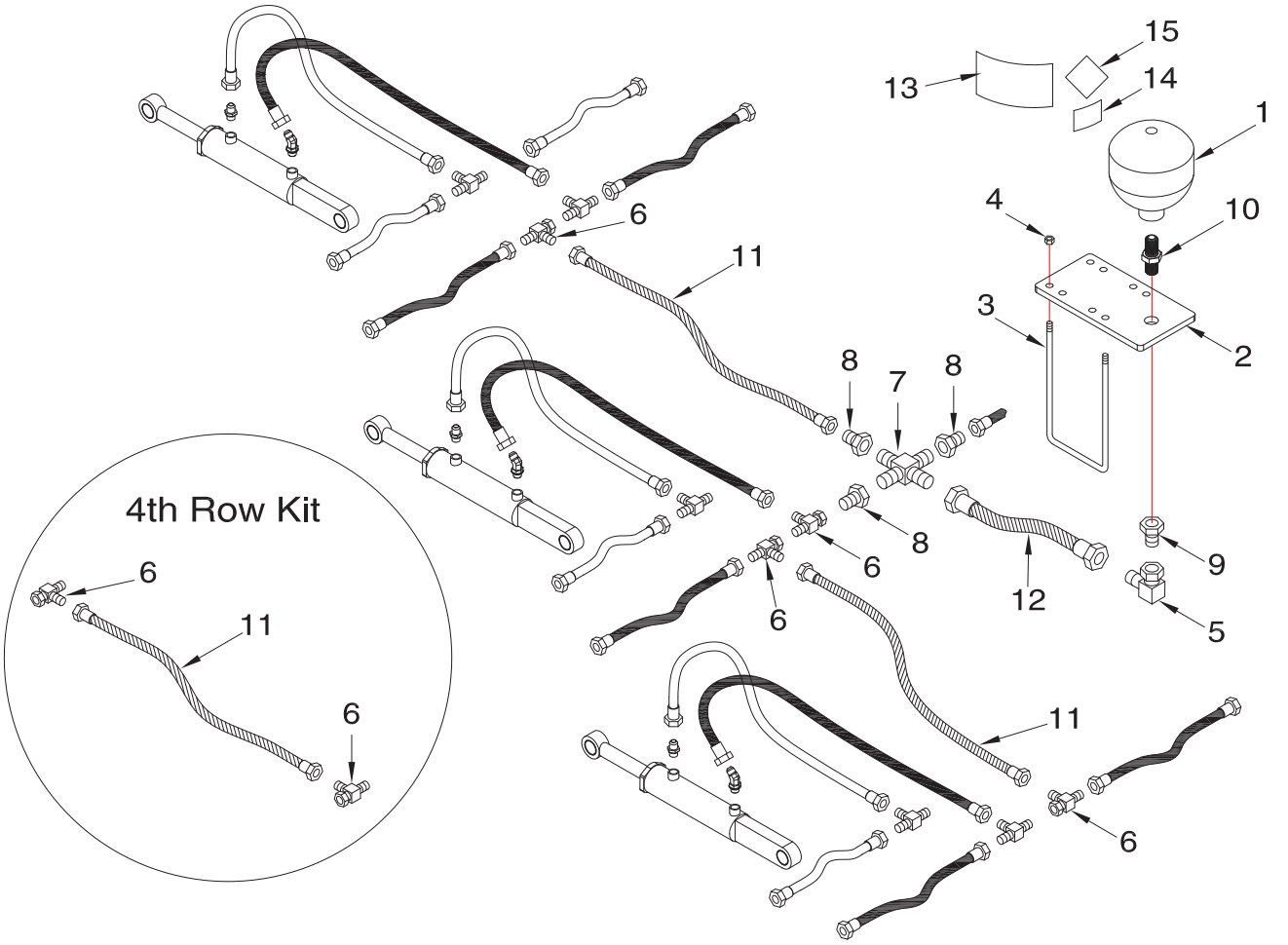

Item	Part No.	Description	Qty
1	S71729	Accumulator - Small - Pre-Charged (North America) - Includes items 14, 15 and 16	1
1A	S71730	Accumulator - Small - No Charge (Export)	
2	S69720	Mount Plate - Accumulator	1
3	N19723	U-Bolt - 3/8 x 4 x 7 UL	2
4	S27987	Lock Nut - 3/8 Flanged Center	4
5	K-5806	90 Elbow - Swivel - 7/8-14 MJIC x 7/8-14 FJIC	1
6	C-4403	Tee - (2) 9/16-18 MJIC x (1) 9/16-18 FJIC (MMF)	4
7	C-4401	Cross - (4) 7/8-14 MJIC	1
8	F10384	Connector - 9/16-18 MJIC x 7/8-14 FJIC	3
9	C15839	Connector - 7/8-14 (#10) MJIC x 3/4-16 (#08) FJIC	1
10	S71732	Bulk Head Union - 3/4-16 (#08) MJIC x 3/4-16 (#08) MORB	1
11	S47799	Hyd Hose - 3/8 x 60 Lg - 9/16-18 (#06) FJIC Ends	2
12	C-4468	Hyd Hose - 1/2 x 24 Lg W/7/8-14 FJIC	1
13	C-4262	Decal - Warning - Pressure Hazard	1
14	S44930	Decal - Pre-Charged Dry Nitrogen	1
15	S44932	Decal - Compressed Nitrogen - UN1066	1
	S69721	Accumulator Kit - QUANTUM (Includes all items above except for 1A) (North America)	
	S71731	Accumulator Kit - QUANTUM (Includes all items above except for 1) (Export)	
	S71733	4th Rank Kit - (Includes one of item 11 and two of item 6)	

60 ft shown

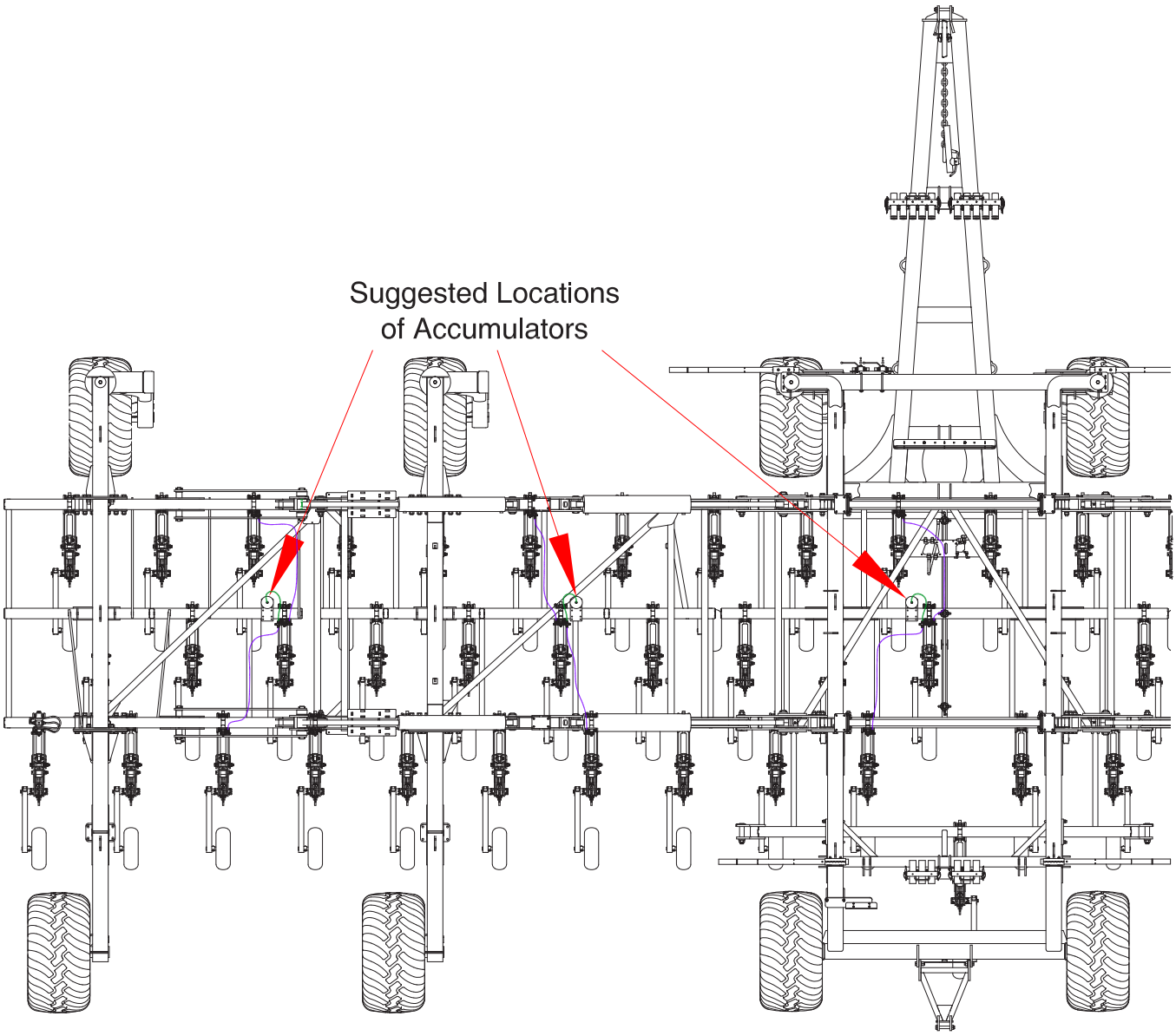

Cylinder Seal Kits

Cylinders are supplied by multiple suppliers

- It is necessary to have the identifing stamp found by the port on the butt end of the cylinder.
See Tech Bulletin 473 for details.



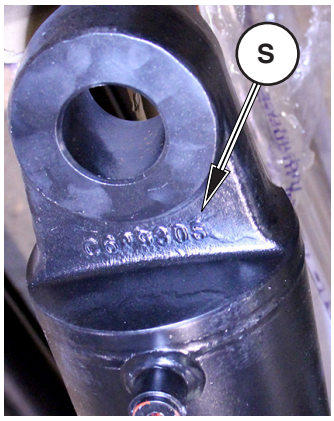

Wing Lift Cylinders

C66871 Seal Kit - Cylinder C65366 - with stamp **S**

C66872 Seal Kit - Cylinder C64930 - with stamp **S**

C66873 Seal Kit - Cylinder C64920 - with stamp **S**

C60599 Seal Kit - Cylinder C65366 - with stamp **R**

C65379 Seal Kit - Cylinder C64930 - with stamp **R**

C65377 Seal Kit - Cylinder C64920 - with stamp **R**



Opener Cylinders - Prior to 2022

C71900 Seal Kit - Cylinder C64546 - with stamp **M**

C44461 Seal Kit - Cylinder C64546 - with stamp **R**

Cast Opener Cylinders - 2022 to present

C71900 Seal Kit - Cylinder C68272

C72720 Seal Kit - Cylinder C72090



Opener Cylinder ID

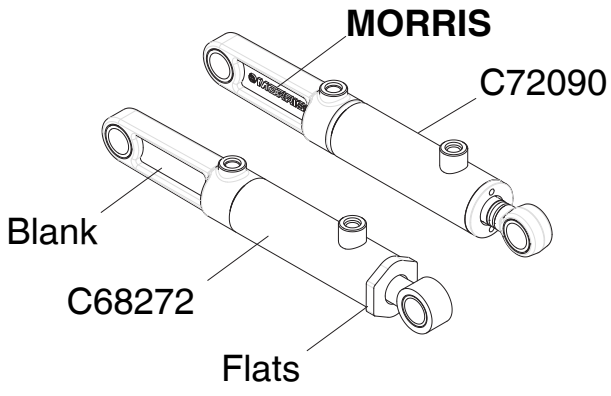



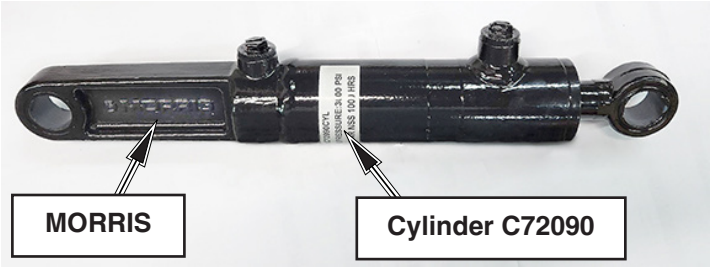

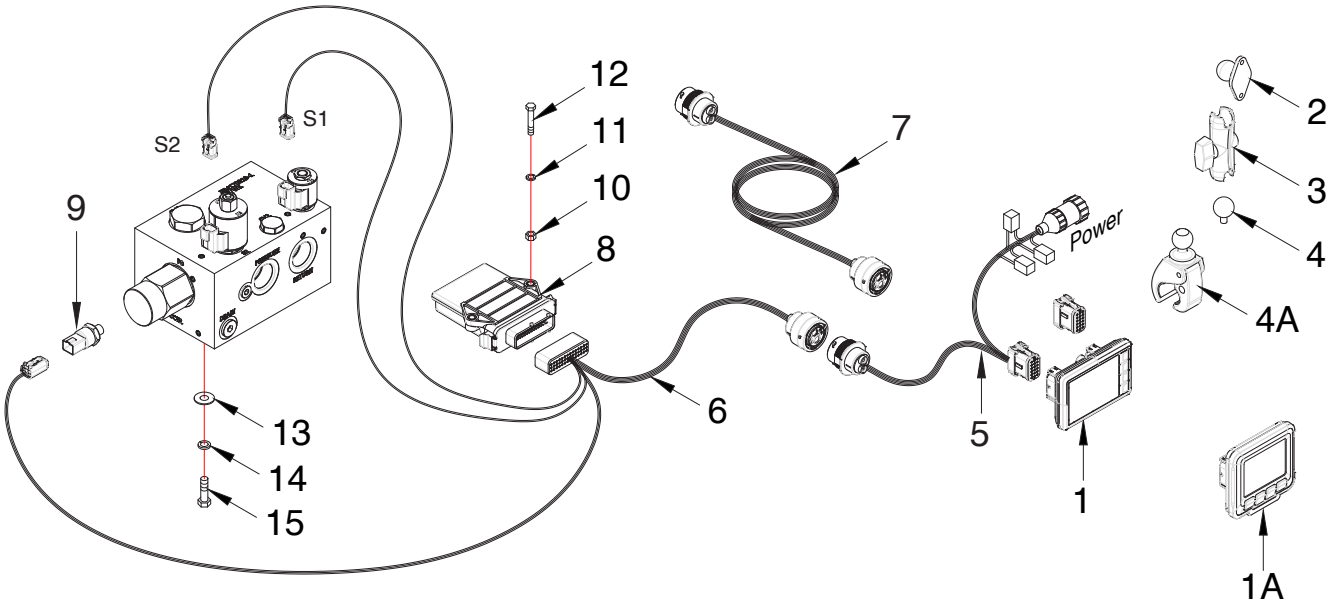

Item	Part No.	Description	Qty
1	N72180	CC Pilot Display Version 2 - 3 1/2 Full Color (New for July 2021) Shown	1
1A	N65145	CC Pilot Display - 3 1/2 Full Color (Prior to 2022)	1
2	N45644	Ram Mount - 1 7/16 x 1 5/16	1
3	N65147	Ram Short Arm	1
4	N65148	Ram Ball - 1 Diameter	1
4A	N65146	Ram Claw Mount	
5	N72541	Harness - Tractor (1000545) (Replaces N65141)	1
6	N72542	Harness - Implement (1000546) (Replaces N65142)	1
7	N72543	Harness - Extension (Tow Between Carts) (1000626) (Replaces N65149)	1
8	N65143	ESX-10Xp ECU	1
9	K62977	Pressure Transducer	1
10	W-512	Hex Nut - 1/4	2
11	W-521	Lockwasher - 1/4	2
12	C-1471	Hex Bolt - 1/4 x 1 3/4 Lg	2
13	W-538	Flatwasher - 7/16 ID x 1 OD x 14 GA	4
14	W-523	Lockwasher - 3/8	4
15	W-475	Hex Bolt - 3/8 x 1 Lg	4
	N72181	CC Pilot Display Kit - (Includes Items 1 to 4) (New for July 2021)	
	N65140	CC Pilot Display Kit - (Includes Items 1A to 4) (Prior to 2022)	

Kit for 2-3 Tank Carts (N67052)

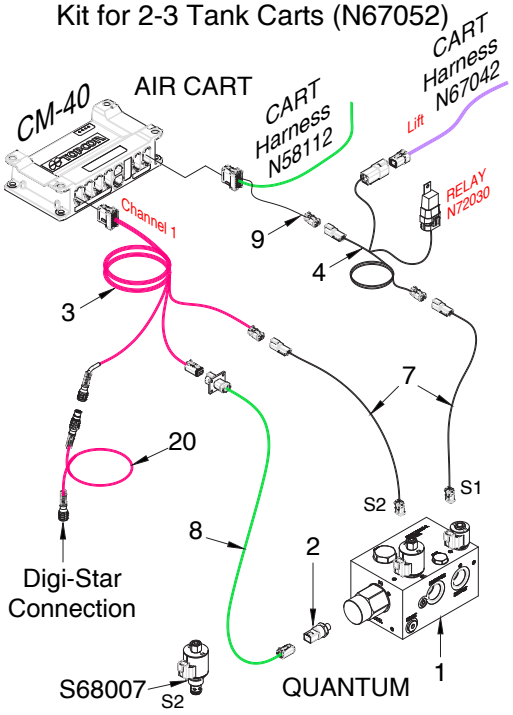

Kit for 4 Tank Carts (N67051)

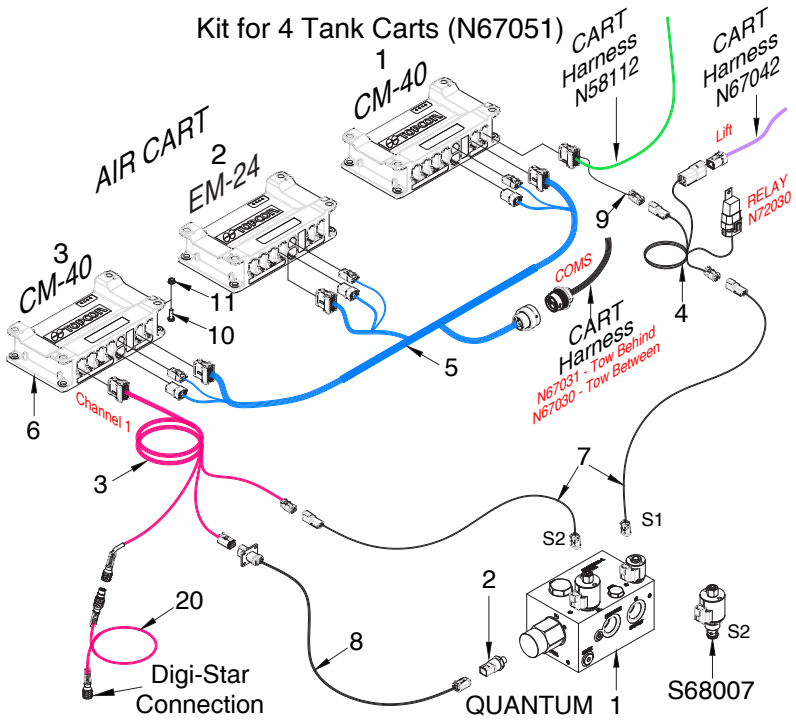

Kit N67798

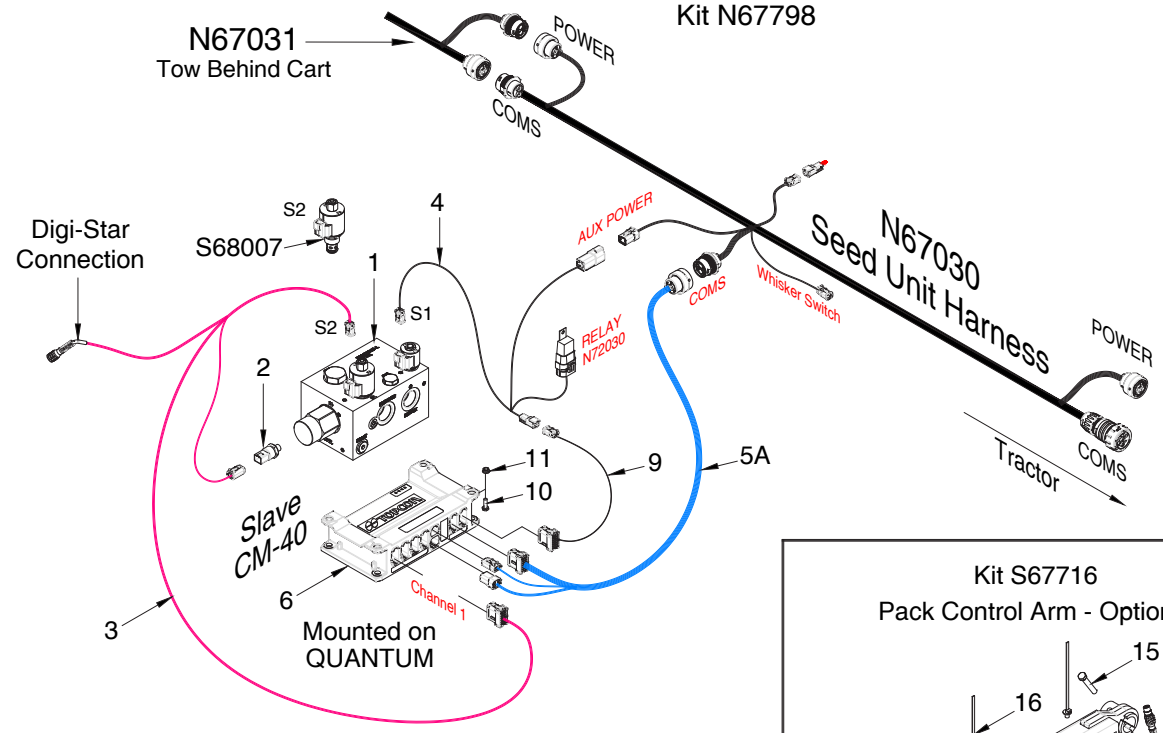

Kit S67716
Pack Control Arm - Optional

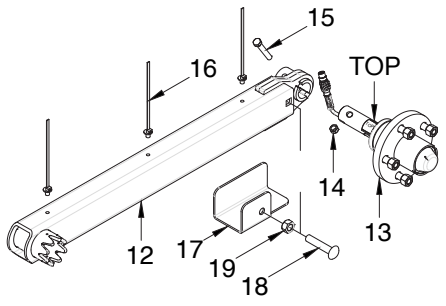

9 Series Apollo - Lift and Pressure Control Kit - Prior to 2022			
Item	**Part No.**	**Description**	**Qty**
1	S64940	Manifold - Opener Control (Requires S68007 see note below)	1
	S68006	Manifold - Opener Control - 2000 psi (Includes S68007)	
2	K62977	Pressure Transducer	1
3	N67045	Harness - Pack Control (1026291-01)	1
4	N67046	Harness - Lift Control (1006258-01) . . . . (N72030 - Relay - 12 Volt 20/40A)	1
5	N67037	Harness - Triplex ECU Adapter (1005038-01)	1
5A	N67038	Harness - Single ECU (1005036-01)	1
5B	N68000	Harness Extension - 2m - (1028492-01) - Optional	
6	N68950	Apollo Master Module ECU - CM-40 Series 2 - (1024223-01)	1
7	N59010	Harness Extension - Work Switch - 5m - (AGA4468)	2
8	N64671	Pressure Transducer Extension Harness - 7m - (1024230-01)	1
9	N68001	AUX Lift Lower Signal Adapter	1
10	W-187	Hex Bolt - 3/8 x 1 1/4 Lg - Bolts ECU to plate under manifold	4
11	D-5279	Locknut - 3/8 Serrated Flange	4
	N67052	Lift and Pressure Control Kit for 2-3 Tank Carts (Includes Items 3, 4, 7, 8, 9, 20)	
	N67051	Lift and Pressure Control Kit for 4 Tank Carts (Includes Items 3, 4, 5, 6, 7, 8, 9, 20)	
	N67798	Lift and Pressure Control Kit for 4 Tank Carts Tow Behind ONLY (Includes Items 3, 4, 5A, 6, 9, 10,11)	
		Pack Pressure Control Arm - Optional	
12	S66267	Packer Arm Steel - Digi-Star	1
13	S67715	Axle Assembly - Digi-Star (Includes S66278 Spindle - Digi-Star) - Steel Arm ONLY	1
14	M-3388	Lock Nut - 3/8 Unitorque	1
15	W-479	Hex Bolt - 3/8 x 2 1/4 Lg	1
16	S67885	Zip Tie - Push Mount	3
17	S69154	Guard - Pack Master Cable	1
18	S47593	Carriage Bolt - 1/2 x 3 1/2 Lg	1
19	F-3405	Locknut - 1/2 Unitorque	1
20	N68002	Extension Cable - Optional	1
	S67716	Pack Pressure Control Arm Assembly (Includes Items 12 to 19)	
	S71738	Pack Control Stubble Guard Field Kit (Includes Items 17 to 19)	

Note: Refer to Technical Bulletin 499 - To operate the Pack Pressure Arm, Manifold S64940 requires the S2 valve must be replaced with S68007 Valve Cartridge - TS12-36CM - 2000 psi

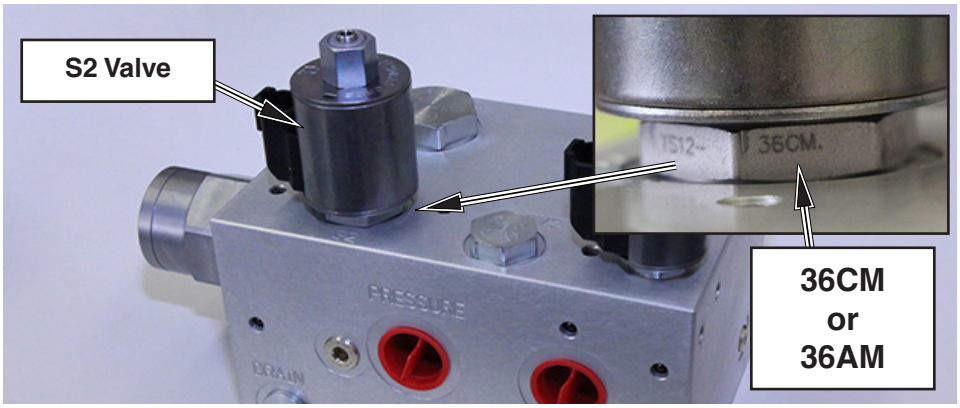

Kit for 2-3 Tank Carts (N67052)

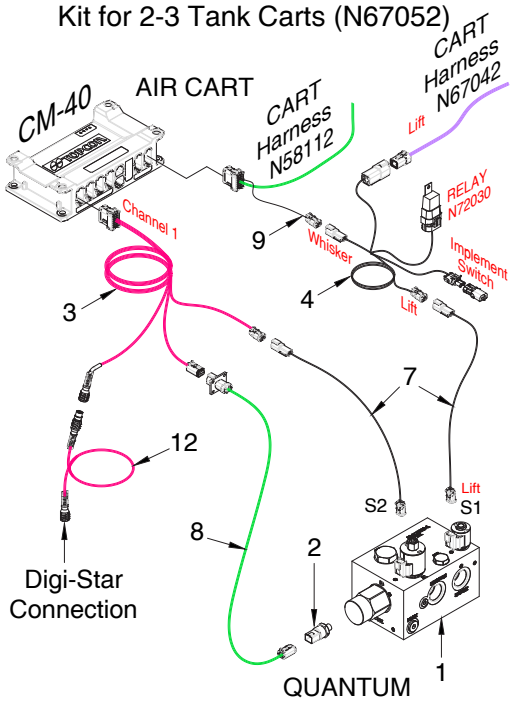

Kit for 4 Tank Carts (N67051)

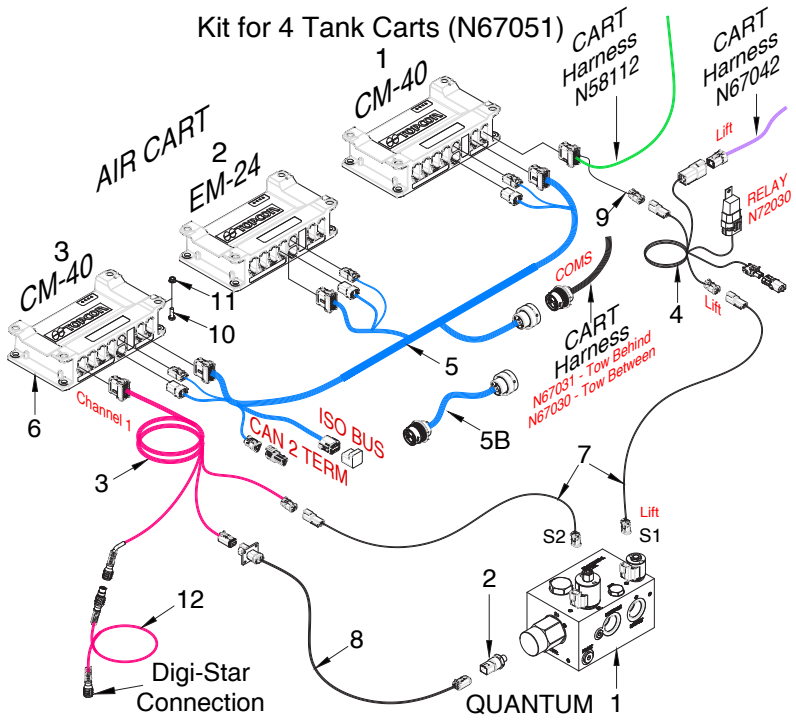

Kit N67798

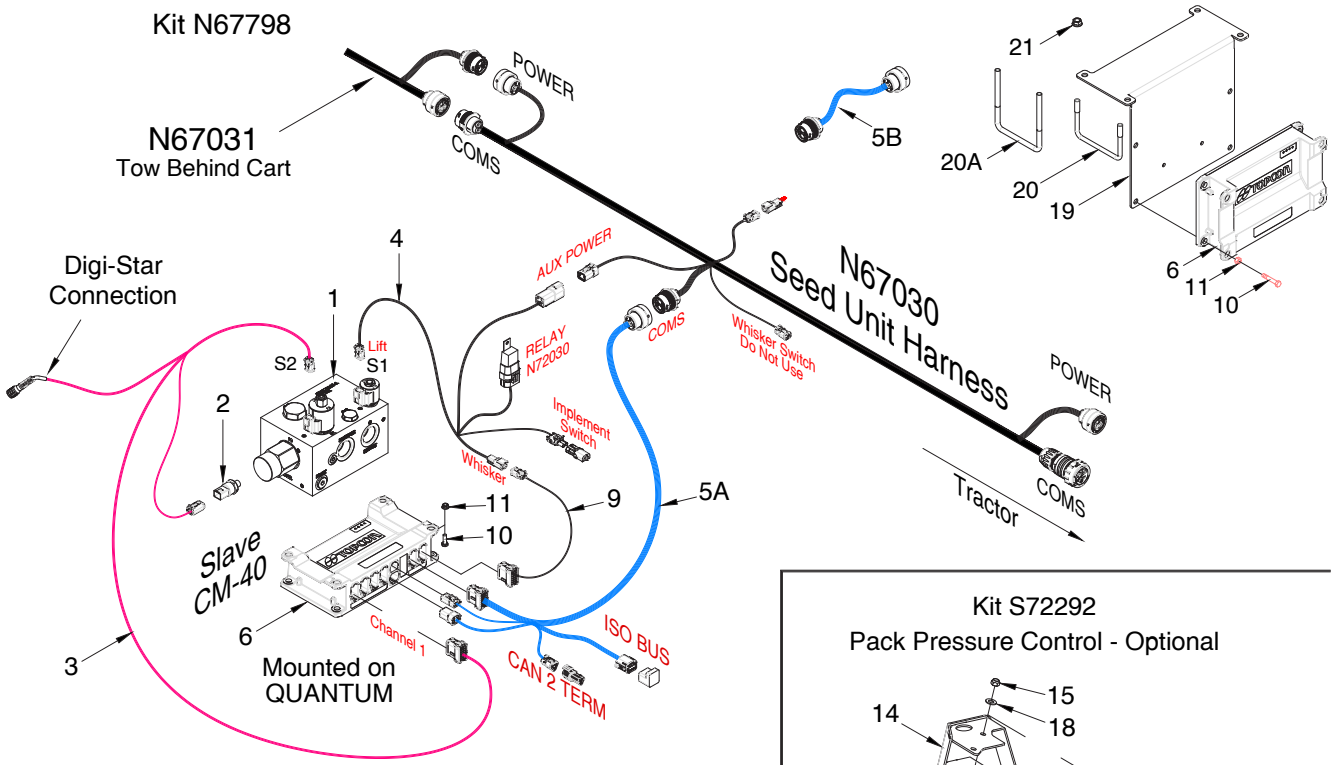

Kit S72292
Pack Pressure Control - Optional

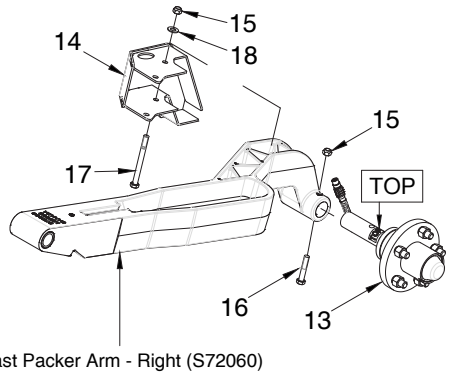

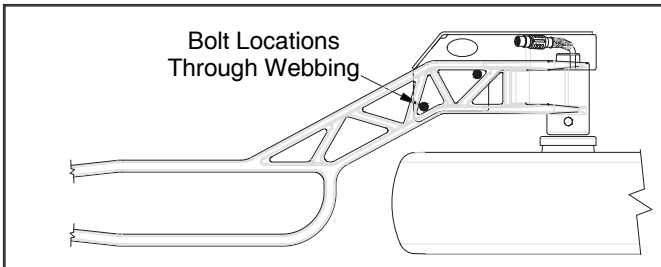

9 Series Apollo - Lift and Pressure Control Kit - 2022 to Present			
Item	**Part No.**	**Description**	**Qty**
1	S68006	Manifold - Opener Control - 2000 psi (Includes S68007)	
2	K62977	Pressure Transducer	1
3	N67045	Harness - Pack Control (1026291-01)	1
4	N67046	Harness - Lift Control (1006258-01) . . . . (N72030 - Relay - 12 Volt 20/40A)	1
5	N67037	Harness - Triplex ECU Adapter (1005038-01)	1
5A	N67038	Harness - Single ECU (1005036-01)	1
5B	N68000	Harness Extension - 2m - (1028492-01) - Optional	
6	N68950	Apollo Master Module ECU - CM-40 Series 2 - (1024223-01)	1
7	N59010	Harness Extension - Work Switch - 5m - (AGA4468)	2
8	N64671	Pressure Transducer Extension Harness - 7m - (1024230-01)	1
9	N68001	AUX Lift Lower Signal Adapter	1
10	W-187	Hex Bolt - 3/8 x 1 1/4 Lg - Bolts ECU to plate under manifold	4
11	D-5279	Locknut - 3/8 Serrated Flange	4
12	N68002	Extension Cable - Pack Control	1
	N67052	Lift and Pressure Control Kit for 2-3 Tank Carts (Includes Items 3, 4, 7, 8, 9, 12)	
	N67051	Lift and Pressure Control Kit for 4 Tank Carts (Includes Items 3, 4, 5, 6, 7, 8, 9, 12)	
	N67798	Lift and Pressure Control Kit for 4 Tank Carts Tow Behind ONLY (Includes Items 3, 4, 5A, 6, 9, 10,11)	
		Pack Pressure Control - Optional	
	S72292	Pack Force Spindle and Guard Kit. (Includes Items 13 to 18)	
13	S72190	Packer Hub Assembly (Includes S72200 Spindle - Digi-Star) - Cast Arm ONLY	1
14	S72094	Guard -Pack Control - Cast Arm - Right	1
15	M-3388	Lock Nut - 3/8 Unitorque	1
16	W-480	Hex Bolt - 3/8 x 2 1/2 Lg	1
17	C-1550	Hex Bolt - 3/8 x 4 Lg	4
18	D-5489	Washer - 13/32 ID x 13/16 OD x 16 GA	4
		ECU Relocation Mount Kit - Optional	
		Relocates CM-40 away from the valve block mounting it to front truss tube.	
19	S73263	Mount Plate	1
20	D-4932	U-Bolt - 3/8 x 4 1/8 x 3 UL	2
20A	N15098	U-Bolt - 3/8 x 4 x 5 UL	2
21	S27987	Lock Nut - 3/8 Flanged	4
5B	N68000	Harness Extension - 2m - (1028492-01)	1
	S73264	Relocation Mount Kit - 40 ft to 70 ft (Includes Items 5B, 19, 20 and 21)	
	S73265	Relocation Mount Kit - 80 ft (Includes Items 5B, 19, 20A and 21)	

Tow Behind Configuration

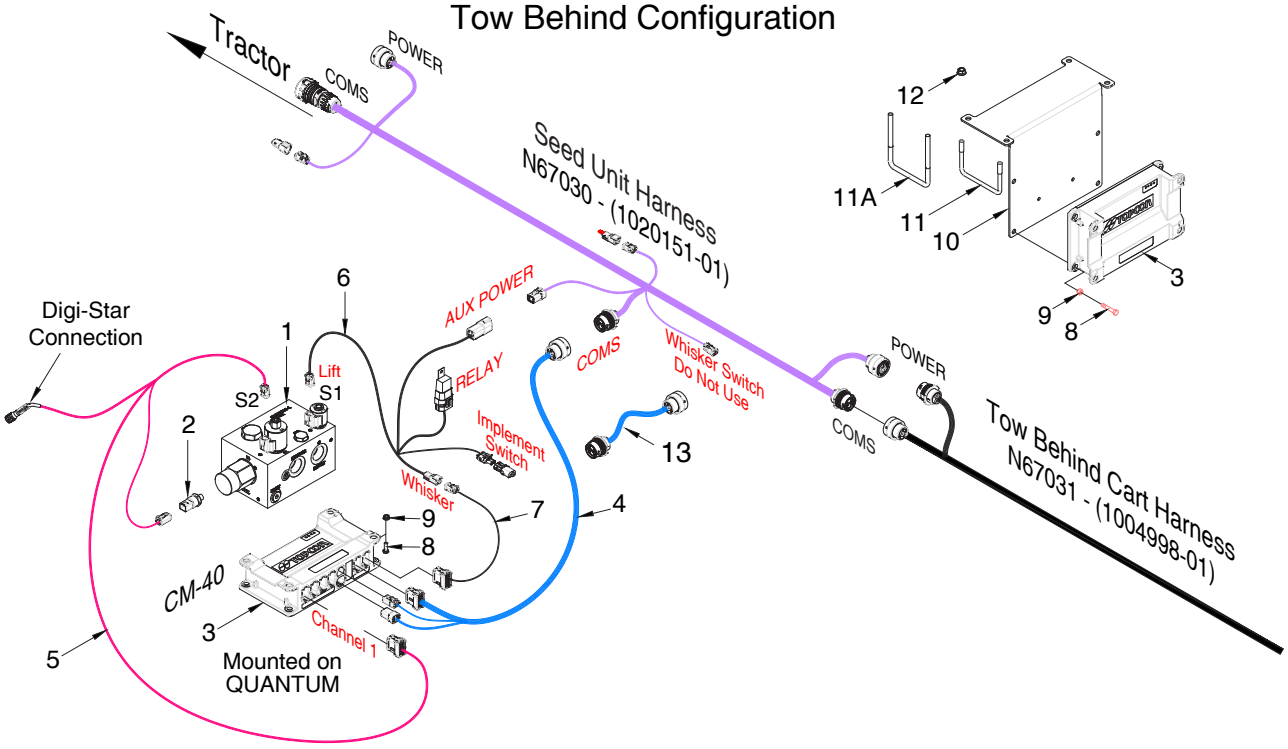

Tow Between Configuration

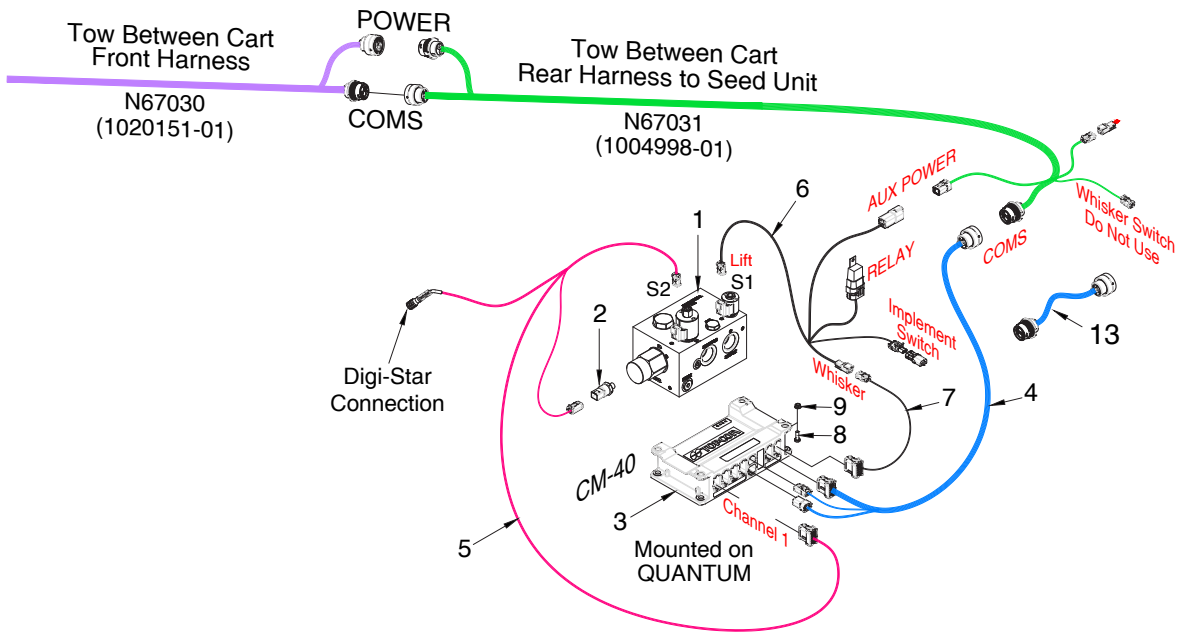

Kit S72292
Pack Pressure Control - Optional

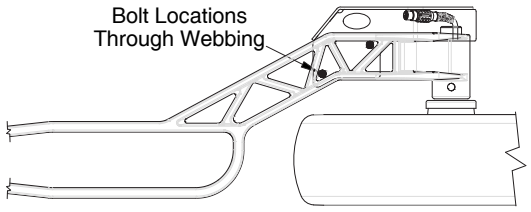

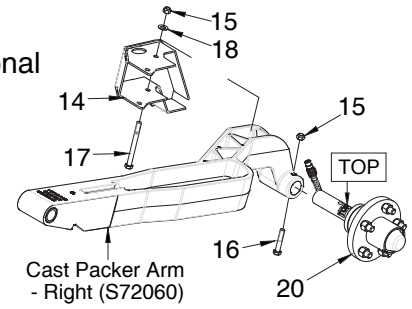

10 Series Apollo - Lift and Pressure Control Kit

Item	Part No.	Description	Qty
1	S68006	Manifold - Opener Control - 2000 psi (Includes S68007)	1
2	K62977	Pressure Transducer	1
3	N74222	Apollo Master Module ECU - CM-40 - E-Drive Version (1069705-01)	1
4	N67038	Harness - Single ECU (1005036-01)	1
5	N67045	Harness - Pack Control (1026291-01)	1
6	N67046	Harness - Lift Control (1006258-01). . . . (N72030 - Relay - 12 Volt 20/40A)	1
7	N68001	AUX Lift Lower Signal Adapter	1
8	W-187	Hex Bolt - 3/8 x 1 1/4 Lg - Bolts ECU to plate under manifold	4
9	D-5279	Locknut - 3/8 Serrated Flange	4
	N74261	Lift and Pressure Control Kit (Includes Items 3, 4, 5, 6, 7, 8 and 9)	
		ECU Relocation Mount Kit - Optional	
		Relocates CM-40 to front truss tube.	
10	S73263	Mount Plate	1
11	D-4932	U-Bolt - 3/8 x 4 1/8 x 3 UL	2
11A	N15098	U-Bolt - 3/8 x 4 x 5 UL	2
12	S27987	Lock Nut - 3/8 Flanged	4
13	N68000	Harness Extension - 2m - (1028492-01)	1
	S73264	Relocation Mount Kit - 40 ft to 70 ft (Includes Items 10, 11, 12 and 13)	
	S73265	Relocation Mount Kit - 80 ft (Includes Items 10, 11A, 12 and 13)	
		Pack Pressure Control - Option	
	S72292	Pack Force Spindle and Guard Kit. (Includes ALL Items below) - 2022 to Present	
14	S72094	Guard -Pack Control - Cast Arm - Right	1
15	M-3388	Lock Nut - 3/8 Unitorque	3
16	W-480	Hex Bolt - 3/8 x 2 1/2 Lg	1
17	C-1550	Hex Bolt - 3/8 x 4 Lg	2
18	D-5489	Washer - 13/32 ID x 13/16 OD x 16 GA	2
19	D-4838	Nylon Tie Strap - 3/16 x 7 1/2 Lg	2
20	S72190	Packer Hub Assembly (Includes S72200 Spindle - Digi-Star)	1

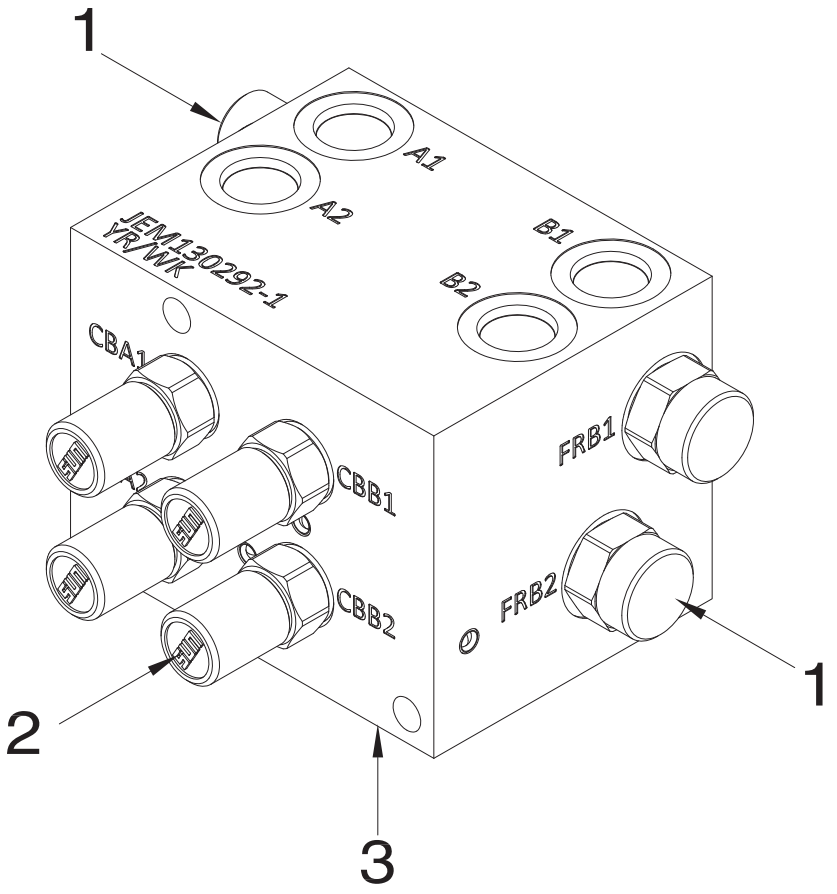

Item	Part No.	Description	Qty
1	C53847	Pressure Compensated Flow Control Cartridge - 5 gpm	4
2	C53848	Counterbalance Cartridge - 2700 psi	4
3	C53849	Counterbalance Winglift Manifold (Includes All Above Items)	

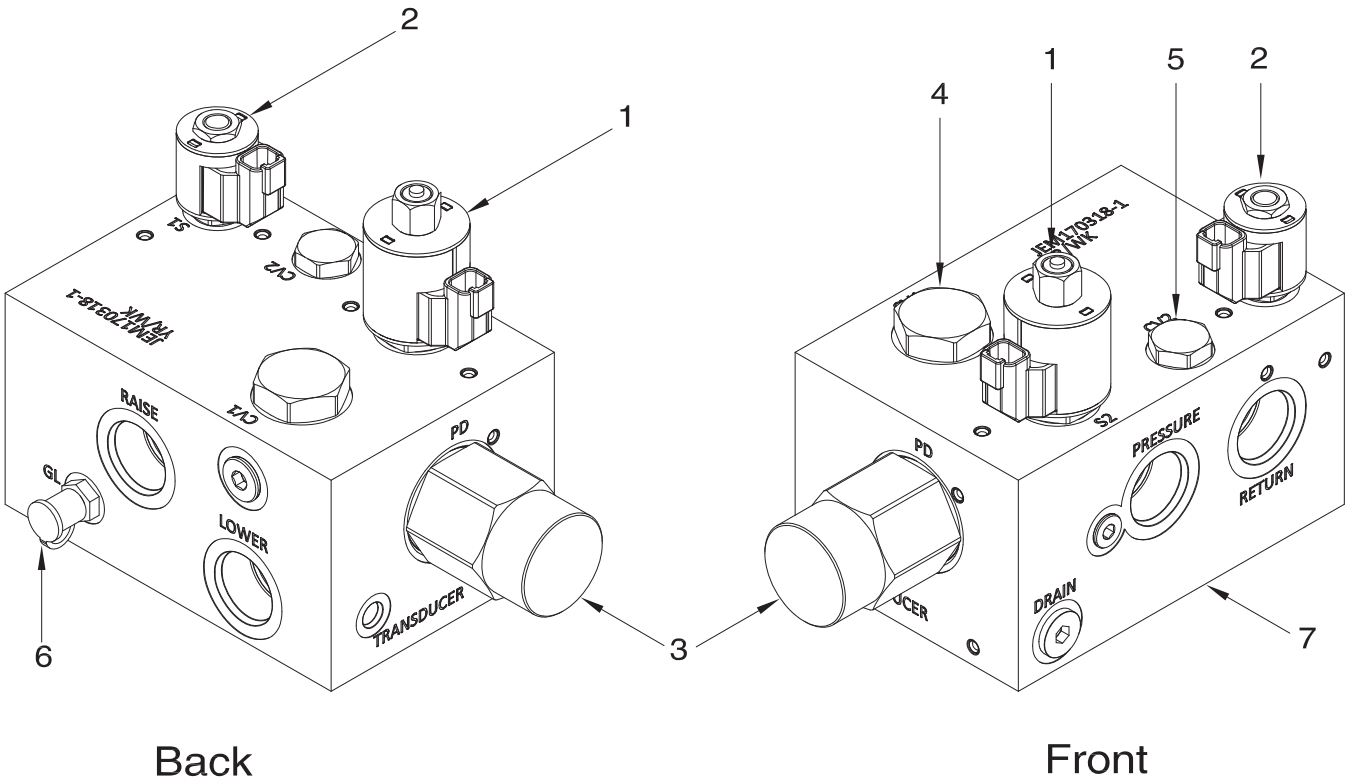

Note: To operate the Pack Pressure Arm, the S2 valve must be replaced with S68007 Valve Cartridge - TS12-36CM - 2000 psi

Item	Part No.	Description	Qty
1	S67316	Pressure Reducing/Relieving Proportional Valve - 3000 psi	1
2	S67317	Solenoid Valve (Includes Coil S69044)	1
3	S67318	Pilot 4-Way. Valve	1
4	S67319	Check Valve - 5 psi	1
5	S67320	Check Valve - 2 psi	1
6	N64583	Coupler - Test Port - 7/16-20 (#4) MORB	1
7	S64940	Manifold - Opener Control - 3000 psi (Includes above Items)	1

Opener Valve Block
2020 to present

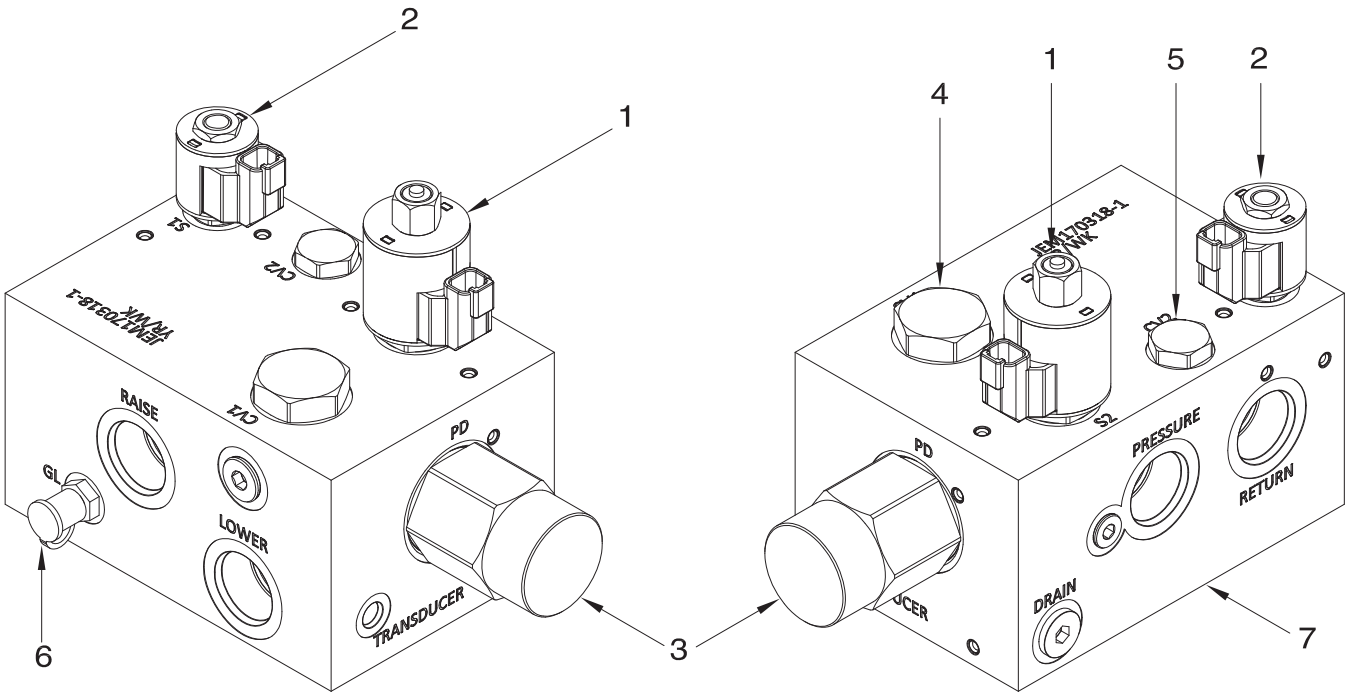

Item	Part No.	Description	Qty
1	S68008	Valve with Solenoid - Pressure Reducing/Relieving Proportional Valve - 2000 psi.....	1
	S68007	Valve ONLY - Pressure Reducing/Relieving Proportional Valve - TS12-36CM - 2000 psi	
2	S67317	Solenoid Valve	1
3	S67318	Pilot 4-Way. Valve.....	1
4	S67319	Check Valve - 5 psi	1
5	S67320	Check Valve - 2 psi	1
6	N64583	Coupler - Test Port - 7/16-20 (#4) MORB	1
7	S68006	Manifold - Opener Control - 2000 psi(Includes above Items)	1

Section 5: Distribution

Section Contents

Quick Coupler - 2 1/2 Inch 5-4
- 3 Outlet 5-4
- 5 Outlet 5-5

Quick Coupler - 3 Inch 5-6
- 2x2 Outlet 5-6
- 2x3 Outlet 5-7
- Tow Between Mount - 10 Series 5-8

Divider Head Assembly 5-10
- Regular 1 inch Square Fingers 5-10
- Mounting Stands 5-12
- Offset Dual Shoot Stands - 2023 to Present 5-14

Single Shoot - Tow Behind 5-16
- 40 ft - 12m - 5 primaries - 12 and 15 inch (300 - 380mm) Spacing 5-16
- 40 ft - 12m - 6 primaries - 10 inch (250mm) Spacing 5-18
- 50 ft - 15m - 6 primaries - 15 inch (380mm) Spacing 5-20
- 50 ft - 15m - 7 primaries - 10 and 12 inch (250 - 300mm) Spacing 5-22
- 60 ft - 18m - 8 primaries - 10, 12 and 15 inch (250 - 300 - 380mm) Spacing 5-24
- 70 ft - 21m - 8 primaries - 10, 12 and 15 inch (250 - 300 - 380mm) Spacing 5-26
- 70 ft - 21m - 9 primaries - 10, 12 and 15 inch (250 - 300 - 380mm) Spacing 5-28
- 80 ft - 24m - 10 primaries - 10 and 12 inch (250 - 300) Spacing 5-30

Single Shoot - Tow Between 5-32
- 40 ft - 12m - 5 primaries - 12 and 15 inch (300 - 380mm) Spacing 5-32
- 40 ft - 12m - 6 primaries - 10 inch (250mm) Spacing 5-34
- 50 ft - 15m - 6 primaries - 15 inch (380mm) Spacing 5-36
- 50 ft - 15m - 7 primaries - 10 and 12 inch (250 - 300mm) Spacing 5-38
- 60 ft - 18m - 8 primaries - 10, 12 and 15 inch (250 - 300 - 380mm) Spacing 5-40
- 70 ft - 21m - 8 primaries - 10, 12 and 15 inch (250 - 300 - 380mm) Spacing 5-42
- 70 ft - 21m - 9 primaries - 10, 12 and 15 inch (250 - 300 - 380mm) Spacing 5-44
- 80 ft - 24m - 10 primaries - 10 and 12 inch (250 - 300) Spacing 5-46

Dual Shoot - Stacked Heads - Tow Behind - Prior to 2023 5-48
- 40 ft - 12m - 5 primaries - 12 and 15 inch (300 - 380mm) Spacing 5-48
- 40 ft - 12m - 6 primaries - 10 inch (250mm) Spacing 5-50
- 50 ft - 15m - 6 primaries - 15 inch (380mm) Spacing 5-52
- 50 ft - 15m - 7 primaries - 10 and 12 inch (250 - 300mm) Spacing 5-54
- 60 ft - 18m - 8 primaries - 10, 12 and 15 inch (250 - 300 - 380mm) Spacing 5-56
- 70 ft - 21m - 9 primaries - 10, 12 and 15 inch (250 - 300 - 380mm) Spacing 5-58

Table of Contents

Dual Shoot - Stacked Heads - Tow Between - Prior to 2023 5-60
40 ft - 12m - 5 primaries - 12 and 15 inch (300 - 380mm) Spacing 5-60
40 ft - 12m - 6 primaries - 10 inch (250mm) Spacing 5-62
50 ft - 15m - 6 primaries - 15 inch (380mm) Spacing 5-64
50 ft - 15m - 7 primaries - 10 and 12 inch (250 - 300mm) Spacing 5-66
60 ft - 18m - 8 primaries - 10, 12 and 15 inch (250 - 300 - 380mm) Spacing 5-68
70 ft - 21m - 9 primaries - 10, 12 and 15 inch (250 - 300 - 380mm) Spacing 5-70
Dual Shoot - Offset Heads - Tow Behind - 2023 to Present 5-72
40 ft - 12m - 5 primaries - 12 and 15 inch (300 - 380mm) Spacing 5-72
40 ft - 12m - 6 primaries - 10 inch (250mm) Spacing 5-74
50 ft - 15m - 6 primaries - 15 inch (380mm) Spacing 5-76
50 ft - 15m - 7 primaries - 10 and 12 inch (250 - 300mm) Spacing 5-78
60 ft - 18m - 8 primaries - 10, 12 and 15 inch (250 - 300 - 380mm) Spacing 5-80
70 ft - 21m - 8 primaries - 10, 12 and 15 inch (250 - 300 - 380mm) Spacing 5-82
70 ft - 21m - 9 primaries - 10, 12 and 15 inch (250 - 300 - 380mm) Spacing 5-84
80 ft - 24m - 10 primaries - 10 and 12 inch (250 - 300) Spacing 5-86
80 ft - 24m - 10 primaries - 10 and 12 inch (250 - 300) Spacing 5-88
80 ft - 24m - 10 primaries - 10 and 12 inch (250 - 300) Spacing 5-90
Dual Shoot - Offset Heads - Tow Between - 2023 to Present 5-92
40 ft - 12m - 5 primaries - 12 and 15 inch (300 - 380mm) Spacing 5-92
40 ft - 12m - 6 primaries - 10 inch (250mm) Spacing 5-94
50 ft - 15m - 6 primaries - 15 inch (380mm) Spacing 5-96
50 ft - 15m - 7 primaries - 10 and 12 inch (250 - 300mm) Spacing 5-98
60 ft - 18m - 8 primaries - 10, 12 and 15 inch (250 - 300 - 380mm) Spacing 5-100
70 ft - 21m - 8 primaries - 10, 12 and 15 inch (250 - 300 - 380mm) Spacing 5-102
70 ft - 21m - 9 primaries - 10, 12 and 15 inch (250 - 300 - 380mm) Spacing 5-104
80 ft - 24m - 10 primaries - 10 and 12 inch (250 - 300) Spacing 5-106
80 ft - 24m - 10 primaries - 10 and 12 inch (250 - 300) Spacing 5-108
80 ft - 24m - 10 primaries - 10 and 12 inch (250 - 300) Spacing 5-110
Broadcast Kit 5-112
10 and 12 inch (250 - 300mm) Spacing 5-112

Quick Coupler - 2 1/2 Inch
3 Outlet

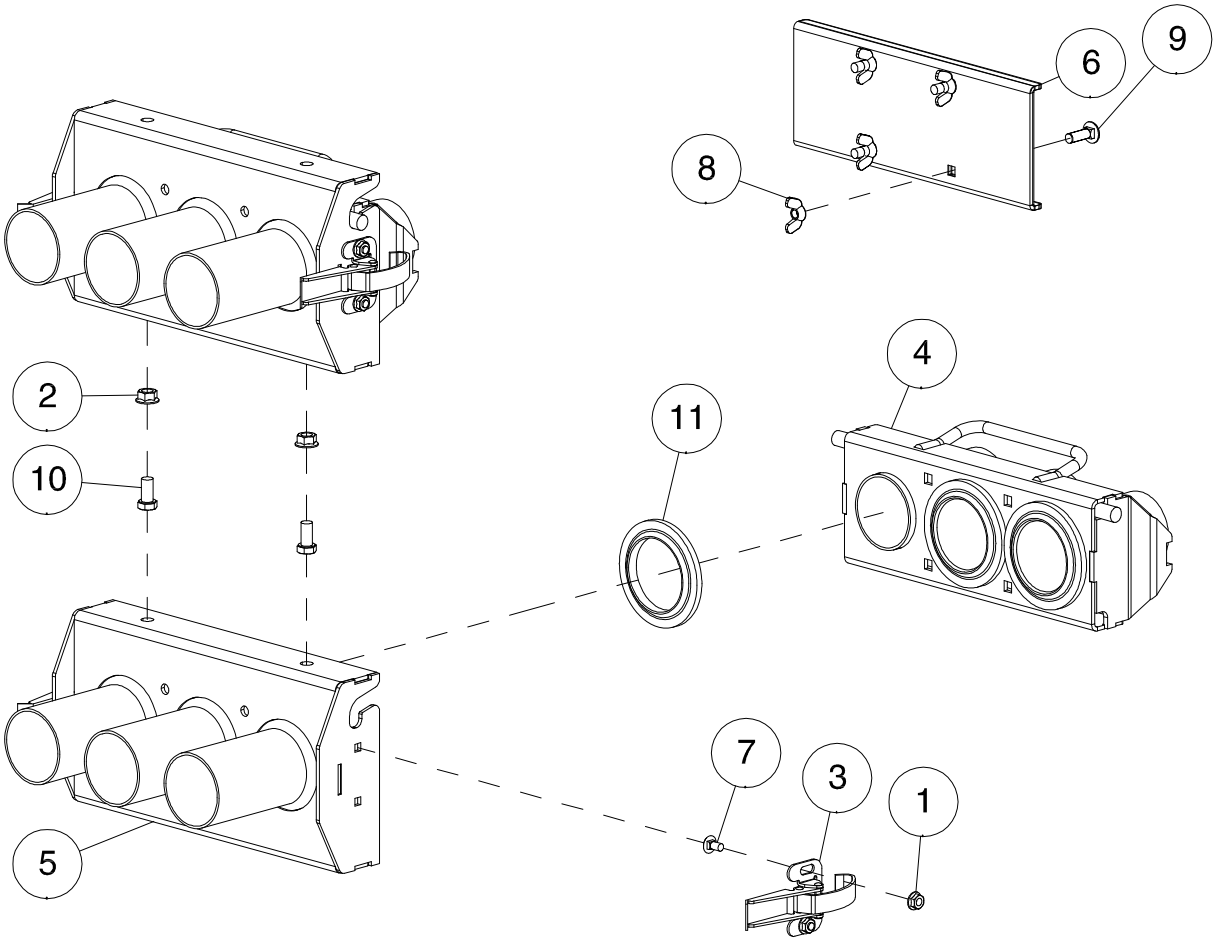

Item	Part No.	Description	Qty
1	D-5277	Flange Lock Nut - 1/4 Serrated	8
2	D-5279	Flange Lock Nut - 3/8 Serrated	2
3	N42213	Latch	4
4	N51983	Quick Coupler - 3 Run - Cart - Contains Item 11	2
5	N53200	Quick Coupler - 3 Run - Drill	2
6	N53207	Cover Plate - 3 Run	2
7	N53215	Carriage Bolt - 1/4 x 1/2 Lg	8
8	N31016	Wing Nut - 5/16	8
9	S33420	Carriage Bolt - 5/16 x 1 Lg	8
10	W-867	Hex Bolt - 3/8 x 3/4 Lg	2
11	N40735	Washer Seal	6
	N16170	Clear Silicon 305ml - used to assemble 11 to 4	AsReq

Quick Coupler - 2 1/2 Inch
5 Outlet

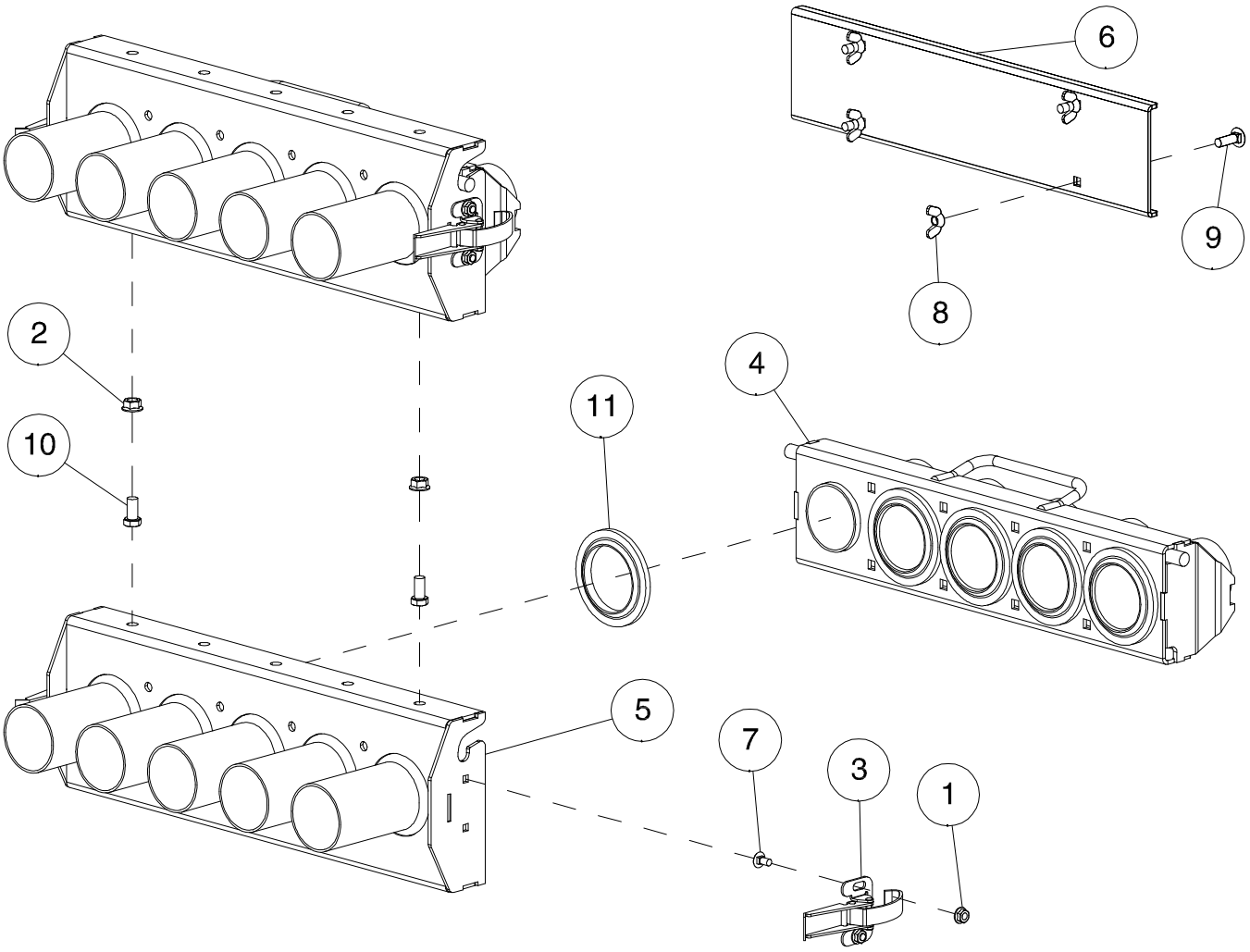

Item	Part No.	Description	Qty
1	D-5277	Flange Lock Nut - 1/4 Serrated	8
2	D-5279	Flange Lock Nut - 3/8 Serrated	2
3	N42213	Latch	4
4	N51955	Quick Coupler - 5 Run - Cart - Contains Item 11	2
5	N51960	Quick Coupler - 5 Run - Drill	2
6	N53209	Cover Plate - 5 Run	2
7	N53215	Carriage Bolt - 1/4 x 1/2 Lg	8
8	N31016	Wing Nut - 5/16	8
9	S33420	Carriage Bolt - 5/16 x 1 Lg	8
10	W-867	Hex Bolt - 3/8 x 3/4 Lg	2
11	N40735	Washer Seal	6
	N16170	Clear Silicon 305ml - used to assemble 11 to 4	AsReq

Quick Coupler - 3 Inch
2x2 Outlet

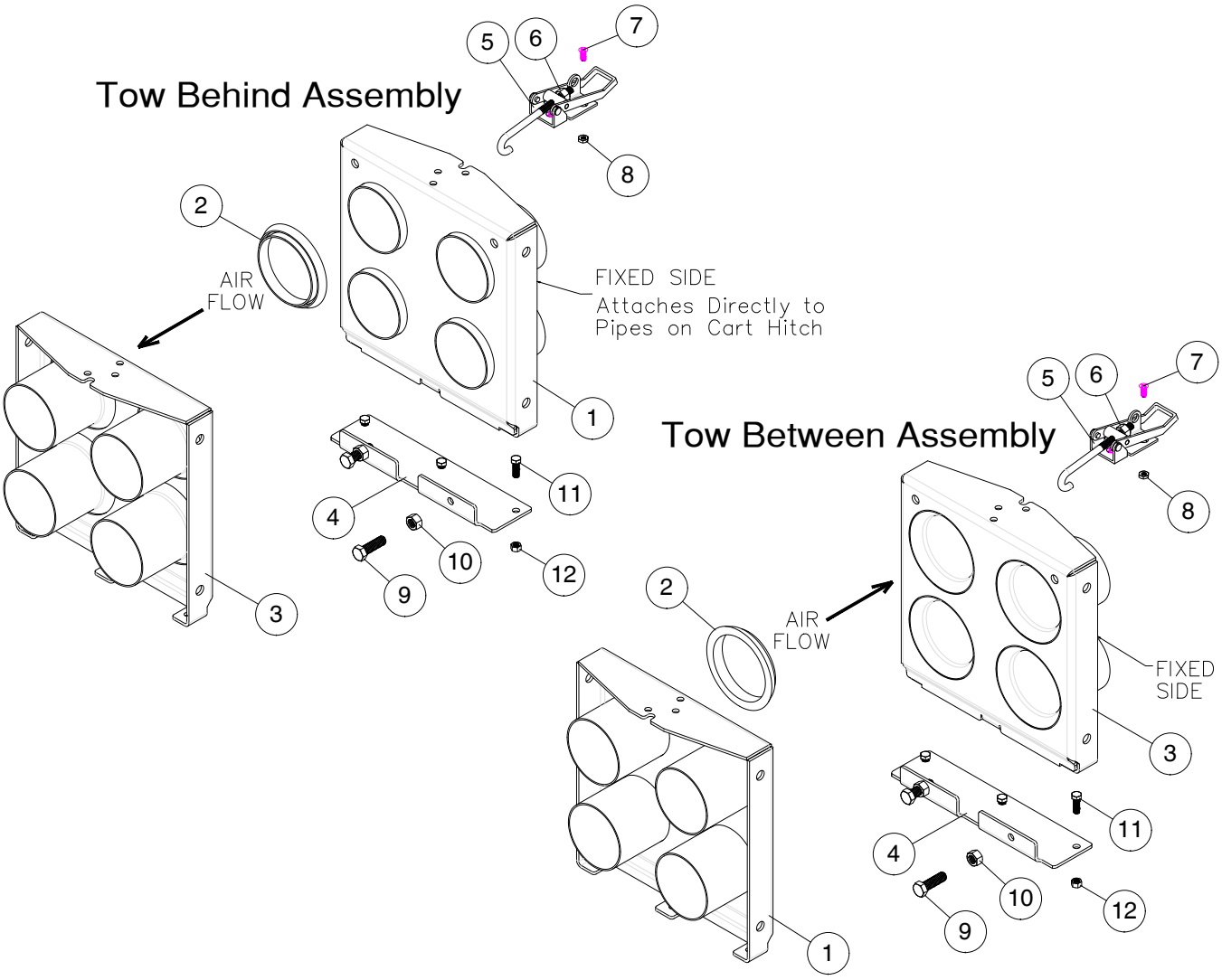

Item	Part No.	Description	Qty
1	N75920	Quick Coupler - 3” - 2 x 2 Run - Seal Side	1
2	N75940	Coupler Seal - 3”	4
3	N75925	Quick Coupler - 3” - 2 x 2 Run - Flange Side	1
4	N75932	Catch Plate - 2 x 2 Run	1
5	N75939	Quik Coupler Latch	1
6	N42098	Nylon Locknut - SS	1
7	N76501	Screw - #10-24 x 1/2 - SS	3
8	N76502	Jam Nut- #10-24 - SS	3
9	N76500	Hex-Bolt - 3/8 x 1 1/4 - SS	2
10	N34836	Hex-Nut - 3/8 - SS	2
11	N36597	Hex-Bolt - 1/4 x 3/4 - SS	3
12	N76255	Hex-Nut - 1/4 - SS	3
	N76122	Quick Coupler 3” - 2 x 2 Run (Includes Items above)	
	N75921	Cover Plate	

Quick Coupler - 3 Inch
2x3 Outlet

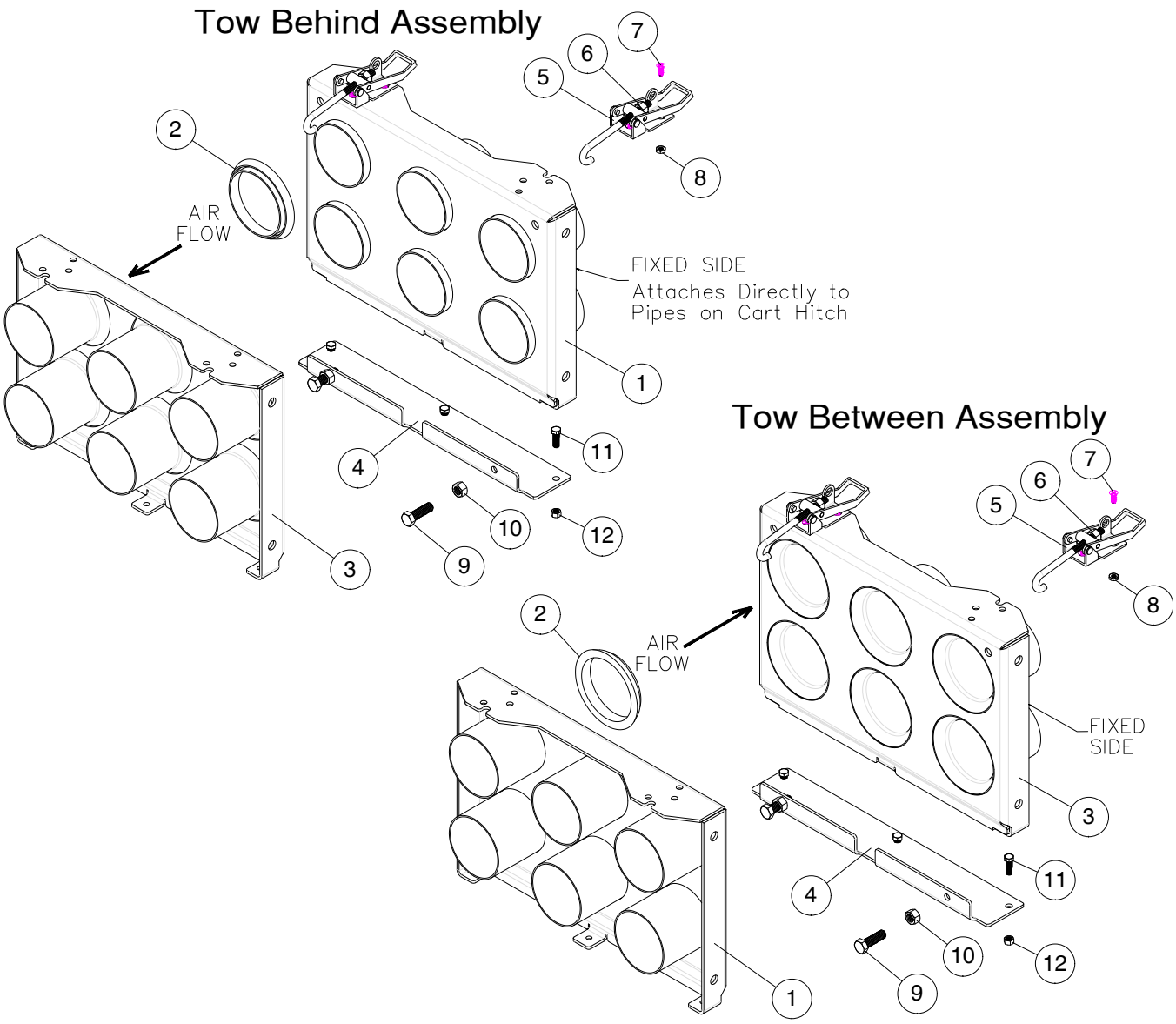

Item	Part No.	Description	Qty
1	N75930	Quick Coupler - 3” - 2 x 3 Run - Seal Side	1
2	N75940	Coupler Seal - 3”	6
3	N75935	Quick Coupler - 3” - 2 x 3 Run - Flare Side	1
4	N75933	Catch Plate - 2 x 3 Run	1
5	N75939	Quik Coupler Latch	2
6	N42098	Nylon Locknut - SS	2
7	N76501	Screw - #10-24 x 1/2 - SS	6
8	N76502	Jam Nut- #10-24 - SS	6
9	N76500	Hex-Bolt - 3/8 x 1 1/4 - SS	2
10	N34836	Hex-Nut - 3/8 - SS	2
11	N36597	Hex-Bolt - 1/4 x 3/4 - SS	3
12	N76255	Hex-Nut - 1/4 - SS	3
	N76123	Quick Coupler 3” - 2 x 3 Run (Includes Items above)	
	N75931	Cover Plate	

Quick Coupler - 3 Inch
Tow Between Mount - 10 Series

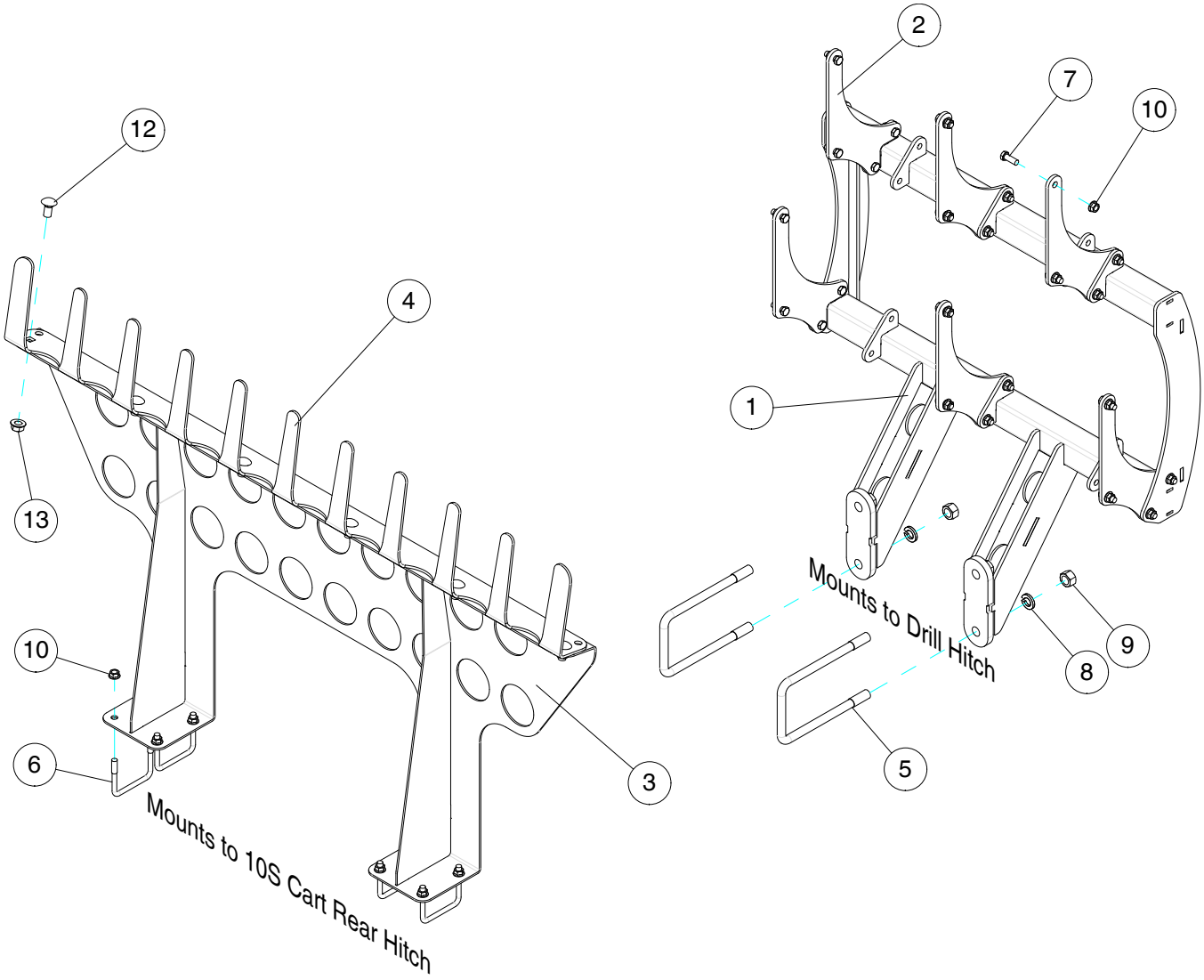

Item	Part No.	Description	Qty
1	N75945	Quick Coupler Bracket - Between (Mounts on Drill)	1
2	N75943	Side Mounting Plate	6
3	N76398	Primary Pipe Stand - 3 - Rear - Between	1
4	N76396	Coupler Hanger Bar	1
5	S39649	U-Bolt - 5/8 x 4 x 7 3/4 UL	2
6	N27709	U-Bolt - 3/8 x 3 x 2 3/4 UL	4
7	G76224	Pbag-10S-Coup-Stand-Btwn - (Includes Items Below) Whole Goods Only	1
8	W-526	Lockwasher - 5/8	4
9	W-517	Hex Nut - 5/8	4
10	S27987	Locknut - 3/8 Flanged	32
11	W-475	Hex Head Bolt - 3/8 x 1 Lg	24
12	D-5265	Carriage Bolt - 1/2 x 1 Lg	6
13	D14565	Locknut - 1/2 Flanged	6
	N76174	Kit - 3” Primary Coupler Support - Between (Includes all above Items)	

Quick Coupler - 3 Inch
Tow Between Mount - Configurations

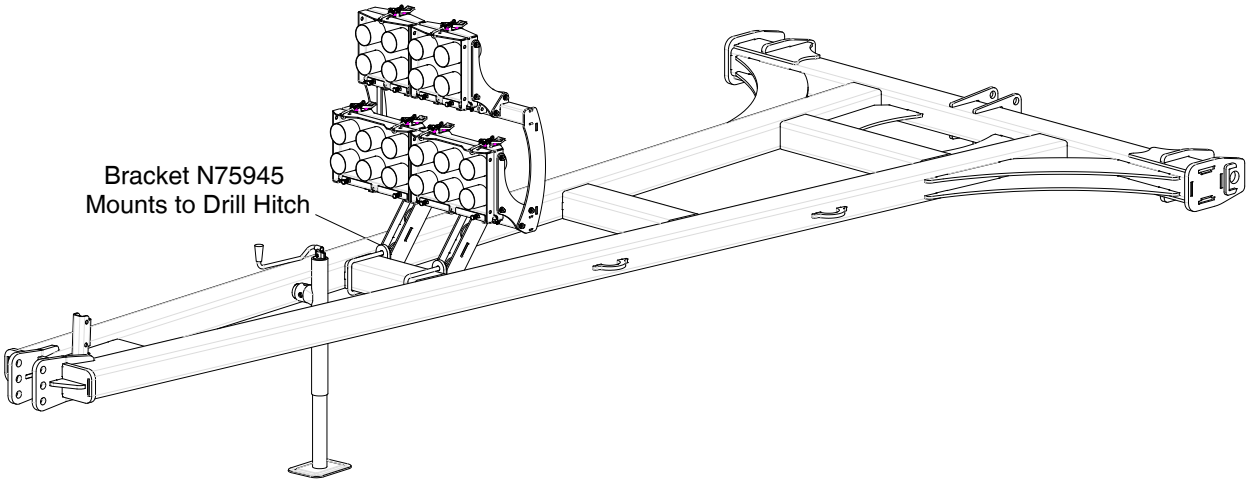

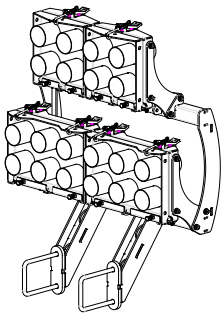

10 Runs

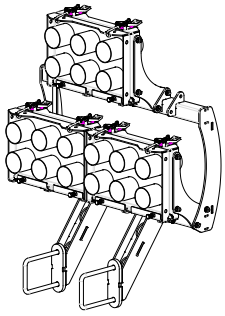

9 Runs

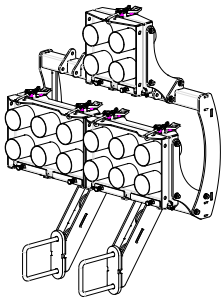

8 Runs

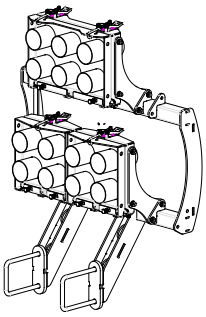

7 Runs

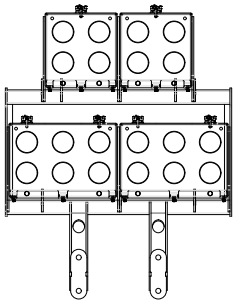

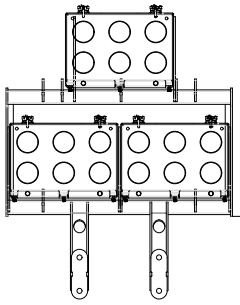

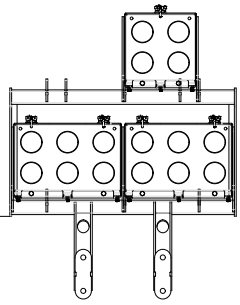

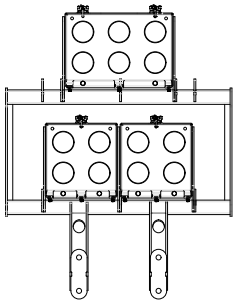

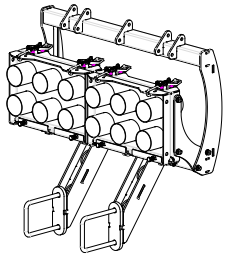

6 Runs

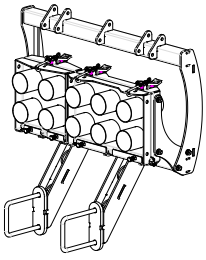

5 Runs

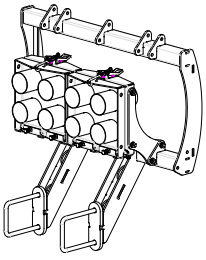

4 Runs

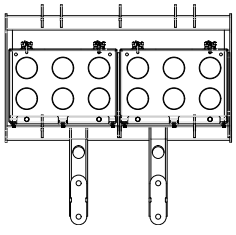

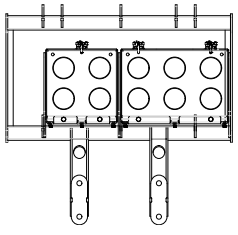

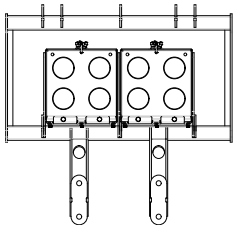

Divider Head Assembly
Regular 1 inch Square Fingers

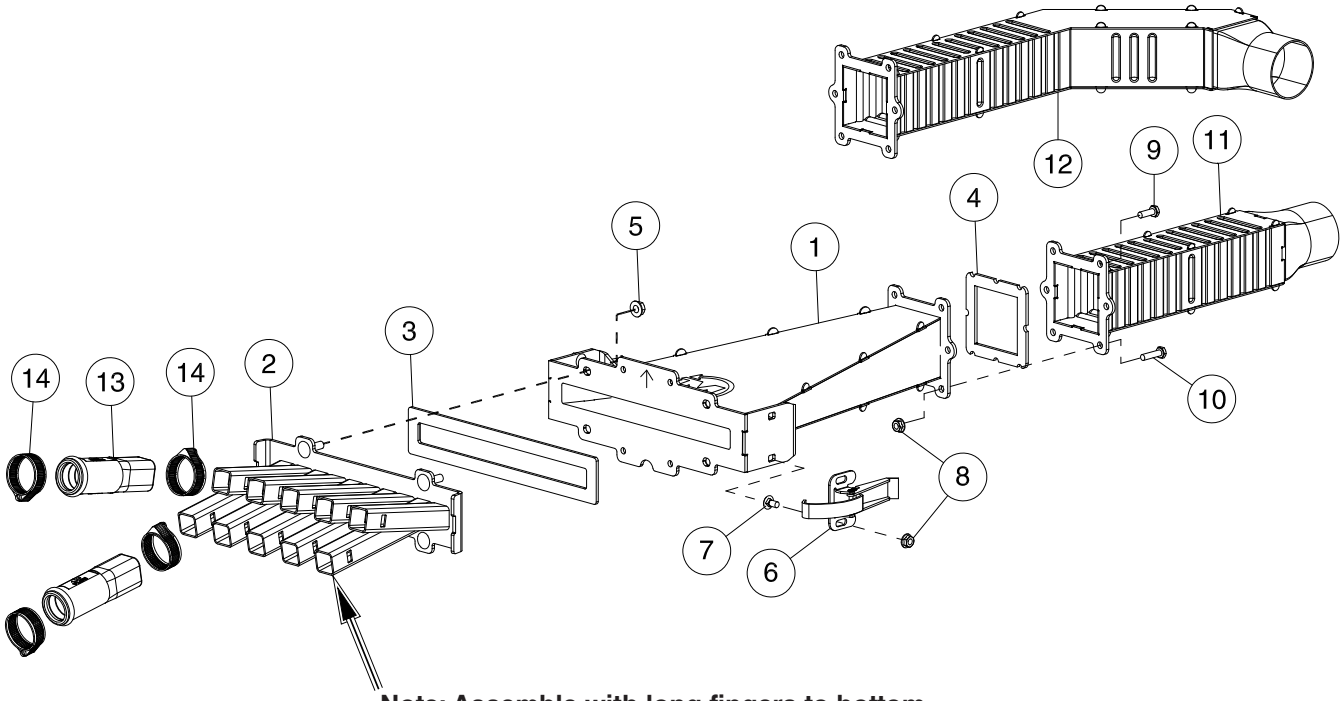

Note: Assemble with long fingers to bottom.

Item	Part No.	Description	Qty
		SIX OUTLET DIVIDER HEAD	
1	N72163	6 Outlet Divider Head - Main Body (N66556)	1
2	N66516	6 Outlet Flange - 1 inch Square Fingers	1
3	N66176	Seal - 6 Outlet	1
4	N66175	Diffuser Seal	1
5	D-5278	Flange Lock Nut - 5/16	4
6	N42213	Over-Center Catch	2
7	N53215	Carriage Bolt - 1/4 x 1/2 Lg	4
8	D-5277	Flange Lock Nut - 1/4 Serrated	4
	N66506	**6 Outlet Divider Head Assembly (Includes All Above Items)**	
13	N65131	Adapter Secondary Hose - Fits Hose .929 ID x 1.169 OD - Prior to 2023	6
	N72996	**Adapter Secondary Hose - Fits Hose 1 ID x1.25 OD - 2023 to Present**	
14	N11470	Hose Clamp	12
		SEVEN OUTLET DIVIDER HEAD	
1	N72166	7 Outlet Divider Head - Main Body (N66557)	1
2	N66517	7 Outlet Flange	1
3	N66177	Seal - 7 Outlet	1
4	N66175	Diffuser Seal	1
5	D-5278	Flange Lock Nut - 5/16	4
3	N42213	Over-Center Catch	2
4	N53215	Carriage Bolt - 1/4 x 1/2 Lg	4
6	D-5277	Flange Lock Nut - 1/4 Serrated	4
	N66507	**Divider Head Assembly - 7 Outlet (Includes All Above Items)**	
13	N65131	Adapter Secondary Hose - Fits Hose .929 ID x 1.169 OD - Prior to 2023	7
	N72996	**Adapter Secondary Hose - Fits Hose 1 ID x1.25 OD - 2023 to Present**	
14	N11470	Hose Clamp	14

Distribution - Quantum - Regular

Item	Part No.	Description	Qty
		EIGHT OUTLET DIVIDER HEAD	
1	N72160	8 Outlet Divider Head - Main Body (N66558)	1
2	N66518	8 Outlet Flange - 1 inch Square Fingers	1
3	N66178	Seal - 8 Outlet	1
4	N66175	Diffuser Seal	1
5	D-5278	Flange Lock Nut - 5/16	4
6	N42213	Over-Center Catch	2
7	N53215	Carriage Bolt - 1/4 x 1/2 Lg	4
8	D-5277	Flange Lock Nut - 1/4 Serrated	4
	N66508	**Divider Head Assembly - 8 Outlet (Includes All Above Items)**	
13	N65131	Adapter Secondary Hose - Fits Hose .929 ID x 1.169 OD - Prior to 2023	8
	N72996	**Adapter Secondary Hose - Fits Hose 1 ID x1.25 OD - 2023 to Present**	
14	N11470	Hose Clamp	16
		NINE OUTLET DIVIDER HEAD	
1	N72169	9 Outlet Divider Head - Main Body (N66559)	1
2	N66519	9 Outlet Flange - 1 inch Square Fingers	1
3	N66179	Seal - 9 Outlet	1
4	N66175	Diffuser Seal	1
5	D-5278	Flange Lock Nut - 5/16	4
6	N42213	Over-Center Catch	2
7	N53215	Carriage Bolt - 1/4 x 1/2 Lg	4
8	D-5277	Flange Lock Nut - 1/4 Serrated	4
	N66509	**Divider Head Assembly - 9 Outlet (Includes All Above Items)**	
13	N65131	Adapter Secondary Hose - Fits Hose .929 ID x 1.169 OD - Prior to 2023	9
	N72996	**Adapter Secondary Hose - Fits Hose 1 ID x1.25 OD - 2023 to Present**	
14	N11470	Hose Clamp	18
		TEN OUTLET DIVIDER HEAD	
1	N72172	10 Outlet Divider Head - Main Body (N66560)	1
2	N66520	10 Outlet Flange - 1 inch Square Fingers	1
3	N66180	Seal - 10 Outlet (Not Shown)	1
4	N66175	Diffuser Seal	1
5	D-5278	Flange Lock Nut - 5/16	4
6	N42213	Over-Center Catch	2
7	N53215	Carriage Bolt - 1/4 x 1/2 Lg	4
8	D-5277	Flange Lock Nut - 1/4 Serrated	4
	N66510	**Divider Head Assembly - 10 Outlet (Includes All Above Items)**	
13	N65131	Adapter Secondary Hose - Fits Hose .929 ID x 1.169 OD - Prior to 2023	10
	N72996	**Adapter Secondary Hose - Fits Hose 1 ID x1.25 OD - 2023 to Present**	
14	N11470	Hose Clamp - HC5-20 - 20mm Diameter	20
		DIFFUSER PIPE	
8	D-5277	Flange Lock Nut - 1/4 Serrated	4
9	W-469	Hex Head - 1/4 x 3/4 Lg	2
10	W-1552	Hex Bolt - 1/4 x 1 Lg	2
11	N66662	Diffuser - Straight - 2 1/12 outlet (Prior to April 2021)	
	N66663	**Diffuser - Straight - 3 outlet (April 2021)**	**1**
12	N66672	Diffuser - 90 Deg Elbow - 2 1/12 outlet (Prior to April 2021)	
	N66673	**Diffuser - 90 Deg Elbow - 3 outlet (April 2021)**	**1**
15	R480034	Secondary Hose - .929 ID x 1.169 OD/ft (75 ft roll) Not Shown	
	N75770	**Hose - 1 ID x 1.250 OD (100 ft roll) - RED (Fertilizer) - 2026 to Present** Not Shown	
	N75771	**Hose - 1 ID x 1.250 OD (100 ft roll) - BLACK (Seed) - 2026 to Present** Not Shown	

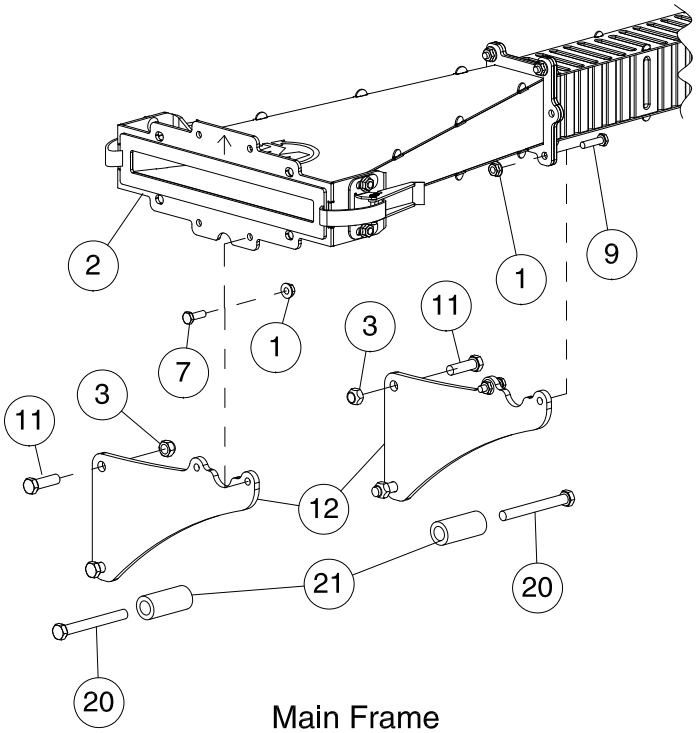

Main Frame
MOUNTING OPTION 1

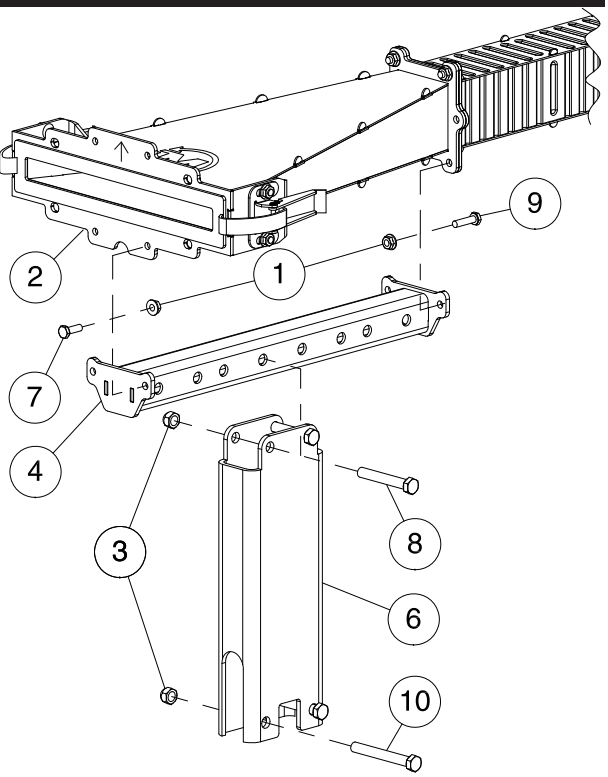

Main Frame
MOUNTING OPTION 2

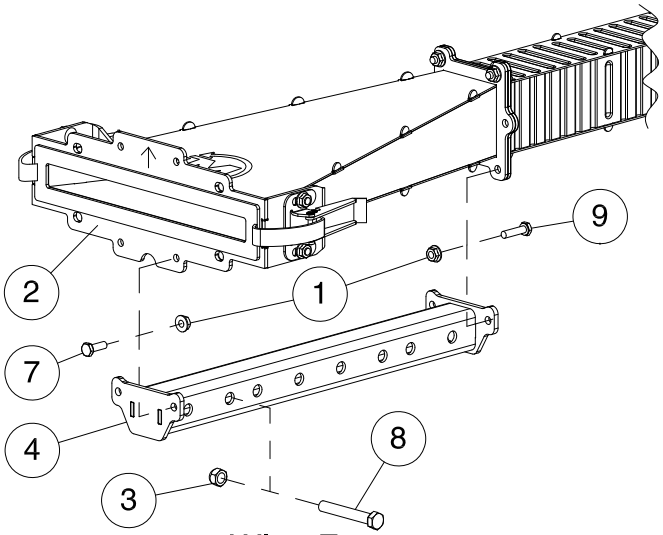

Wing Frame
MOUNTING OPTION 3

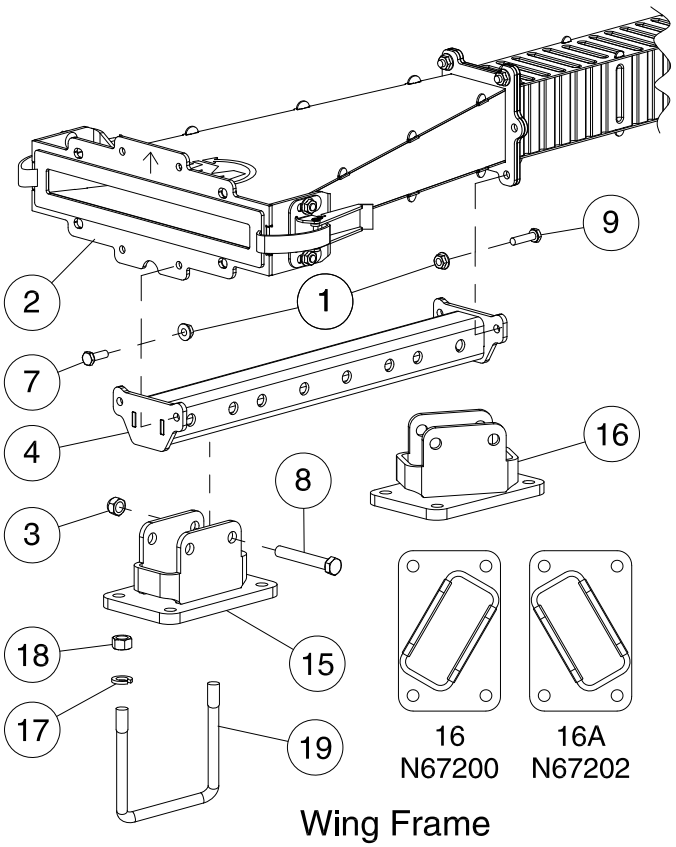

16
N67200

16A
N67202

Wing Frame
MOUNTING OPTION 4

Divider Head Assembly - Mounting Stands

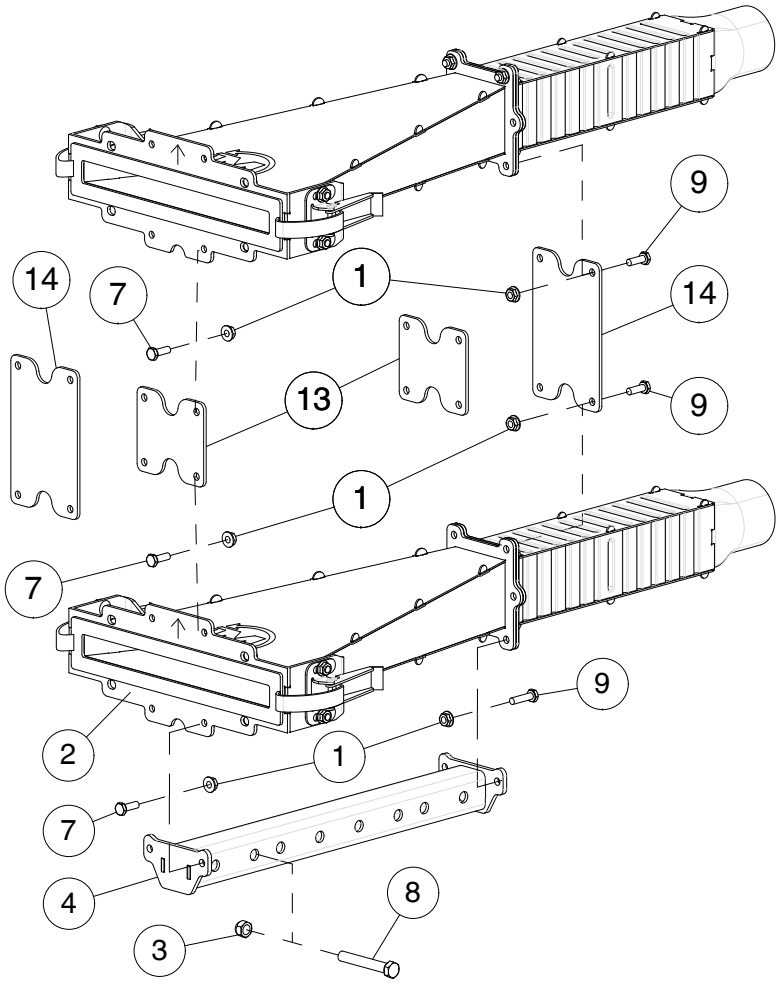

MOUNTING OPTION DUAL SHOOT - Prior to 2023

Item	Part No.	Description	Qty
1	D-5277	Flange Lock Nut - 1/4 Serrated	10
2	* * * * *	Divider Head and Diffuser Tube Assembly - See page 5-6 and 5-7	1
3	M-3388	Locknut - 3/8 Unitorque	4
4	N67135	Head Bracket	1
6	S65390	Divider Head Pedestal - Main Frame	1
7	W-469	Hex Head - 1/4 x 3/4 Lg	4
8	W-480	Hex Bolt - 3/8 x 2 1/2 Lg	2
9	W-1552	Hex Bolt - 1/4 x 1 Lg	2
10	W-1854	Hex Bolt - 3/8 x 3 Lg	2
11	W-187	Hex Bolt - 3/8 x 1 1/4 Lg	4
12	S65382	Head Mounting Plate - Main Frame	2
13	N66140	Dual Head Mounting Plate Low Profile	2
14	N66141	Dual Head Mounting Plate High Profile (Optional)	2
15	N67640	Head Mounting Bracket - Straight	1
16	N67200	Head Mounting Bracket - 30 Degree - Left	1
16A	N67202	Head Mounting Bracket - 30 Degree - Right	1
17	W-523	Lockwasher - 3/8	4
18	W-514	Hex Nut - 3/8	4
19	N19723	U-Bolt - 3/8 x 4 1/16 x 6 15/16 UL	2
20	S-1299	Hex Bolt - 3/8 x 4 1/2 Lg - 60 ft	4
21	N50842	Bushings - .385 ID x 5/8 OD x 3 1/4 Lg - 60 ft	4

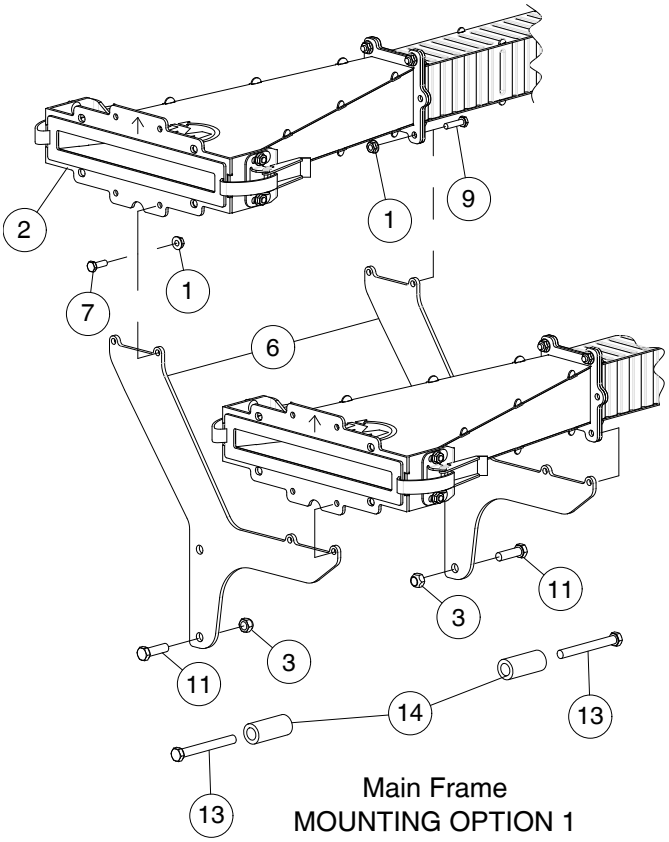

Main Frame
MOUNTING OPTION 1

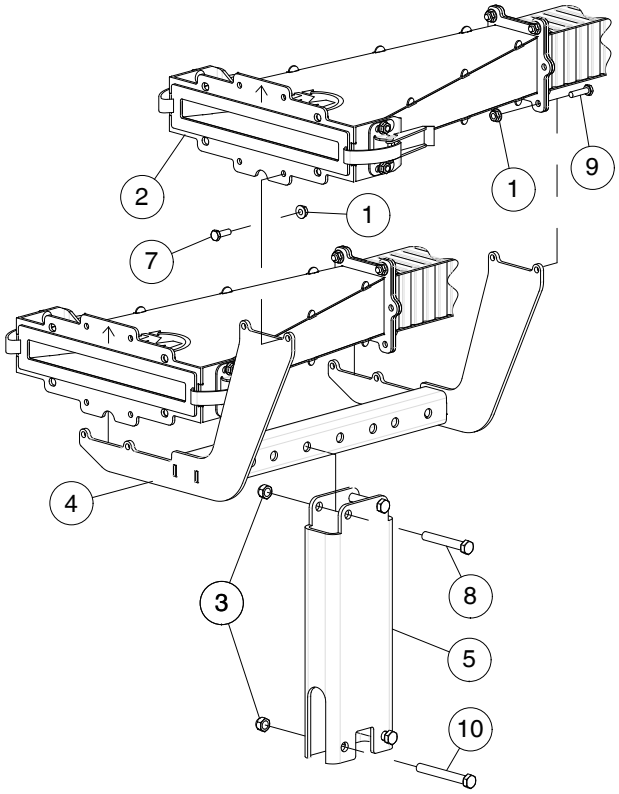

Main Frame
MOUNTING OPTION 2

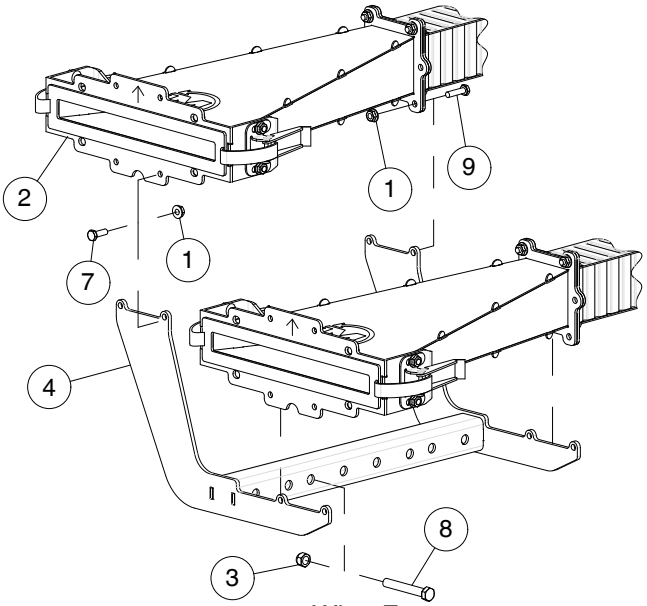

Wing Frame
MOUNTING OPTION 3

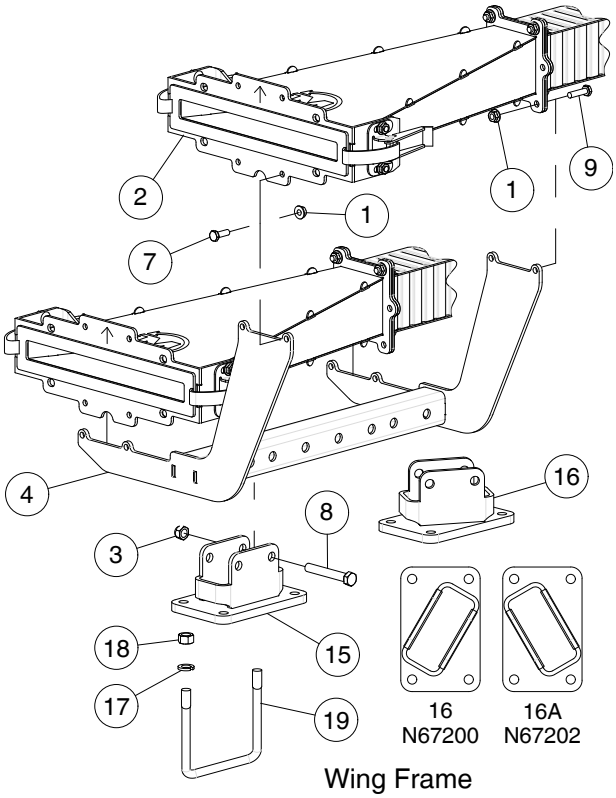

Wing Frame
MOUNTING OPTION 4

Divider Head Assembly - Offset Dual Shoot Stands - 2023 to Present

Item	Part No.	Description	Qty
1	D-5277	Flange Lock Nut - 1/4 Serrated	10
2	* * * * *	Divider Head and Diffuser Tube Assembly - See page 5-6 and 5-7	2
3	M-3388	Locknut - 3/8 Unitorque	4
4	**N71511**	**Offset Head Bracket**	**1**
5	S65390	Divider Head Pedestal - Main Frame	1
6	**N72719**	**Offset Head Mounting Plate - Main Frame**	**2**
7	W-469	Hex Head - 1/4 x 3/4 Lg	4
8	W-480	Hex Bolt - 3/8 x 2 1/2 Lg.	2
9	W-1552	Hex Bolt - 1/4 x 1 Lg.	2
10	W-1854	Hex Bolt - 3/8 x 3 Lg.	2
11	W-187	Hex Bolt - 3/8 x 1 1/4 Lg.	4
13	S-1299	Hex Bolt - 3/8 x 4 1/2 Lg - 60 ft	4
14	N50842	Bushings - .385 ID x 5/8 OD x 3 1/4 Lg - 60 ft	4
15	N67640	Head Mounting Bracket - Straight	1
16	N67200	Head Mounting Bracket - 30 Degree - Left	1
16A	N67202	Head Mounting Bracket - 30 Degree - Right	1
17	W-523	Lockwasher - 3/8	4
18	W-514	Hex Nut - 3/8	4
19	N19723	U-Bolt - 3/8 x 4 1/16 x 6 15/16 UL	2

Single Shoot - Tow Behind
40 ft - 12m - 5 primaries - 12 and 15 inch (300 - 380mm) Spacing

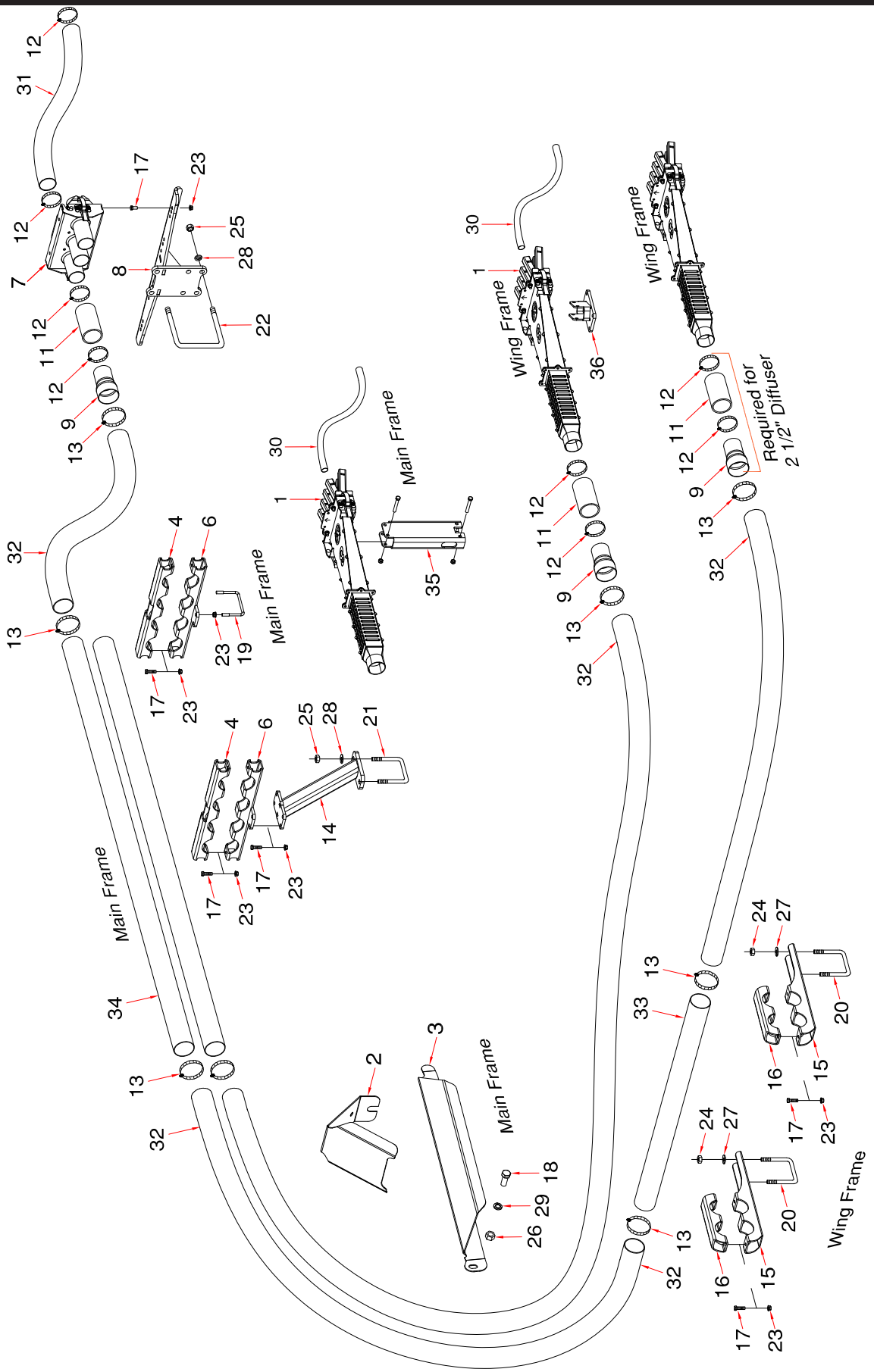

Single Shoot Tow Behind - 40 ft - 12m - 5 primaries

Item	Part No.	Description	Qty
		For 12 and 15 inch - 300mm and 380mm spacing	
1	* * * * *	Divider Head Assembly (Refer to Divider Head Assembly for details)	
		12" spacing uses:	
		N66508 - Divider Head Assembly - 8 Outlet	5
		15" spacing uses:	
		N66506 - Divider Head Assembly - 6 Outlet	3
		N66507 - Divider Head Assembly - 7 Outlet	2
2	S67250	Primary Hose Deflector	2
3	S66430	Primary Hose Hose Suport - Main - Left side (shown)	1
	S66435	Primary Hose Hose Suport - Main - Right side	1
4	N66321	Distribution Pipe Clamp - Main	4
5	* * * * *		
6	N66335	Distribution Pipe Clamp Bracket - Main	4
7	* * * * *	Quick Coupler - 3 Run (Refer to Quick Coupler Assembly for details)	2
8	N53203	Coupler Tower - Behind	1
9	N64095	Primary Hose Adapter	10
10	* * * * *		
11	N19428	Hose - 2.54 ID x 2.79 OD x 5 Lg	10
12	N11905	Hose Clamp - 2 1/2 - HC5-44 (Air Cart side uses 10)	30
13	N64099	Hose Clamp - 3 - SSTCH5-400	22
14	N66325	Distribution Pipe Stand - Main	2
15	N66339	Distribution Pipe Support Bracket - 2 pipe - Wing	4
16	N66359	Distribution Pipe Clamp - 2 pipe - Wing	4
17	W-187	Hex Bolt - 3/8 x 1 1/4 Lg.	24
18	BW-10	Hex Bolt - 3/4 x 1 3/4 Lg.	2
19	D-4932	U-Bolt - 3/8 x 4 1/8 x 3 UL	4
20	C-3932	U-Bolt - 1/2 x 4 x 7 1/4 UL	4
21	S39649	U-Bolt - 5/8 x 4 x 7 3/4 UL	2
22	F-4642	U-Bolt - 5/8 x 6 x 5 1/2 UL	2
23	S27987	Locknut - 3/8 Center Lock	32
24	W-516	Nut - 1/2	8
25	W-517	Nut - 5/8	8
26	W-518	Nut - 3/4	2
27	W-525	Lockwasher - 1/2	8
28	W-526	Lockwasher - 5/8	8
29	W-527	Lockwasher - 3/4	2
30	R480034	Hose - .929 ID x 1.169 OD/ft (75 ft roll) . . .12"SP-450 ft . . .15"SP-375 ft - Prior to 2023	
	N73085	Hose - 1 ID x 1.250 OD (100 ft roll) - 2023 to 2025	
	N75771	**Hose - 1 ID x 1.250 OD (100 ft roll) - BLACK (Seed) - 2026 to Present**	
31	N69294	Hose - 2 1/2 ID x 100 ft roll - **Black** (Air Cart side of couplers)	100
32	N75812	Hose - 3 ID x 100 ft roll - **Black** - (**Seed**)	100
33	N66396	Primary Pipe SS - 3 x 48 Lg	2
34	N64094	Primary Pipe SS - 3 x 96 Lg	4
35	S65390	Divider Head Pedestal - Main Frame	1
36	N67202	Head Mounting Bracket - 30 Degree - Right (shown)	1
36A	N67200	Head Mounting Bracket - 30 Degree - Left	1

Single Shoot - Tow Behind
40 ft - 12m - 6 primaries - 10 inch (250mm) Spacing

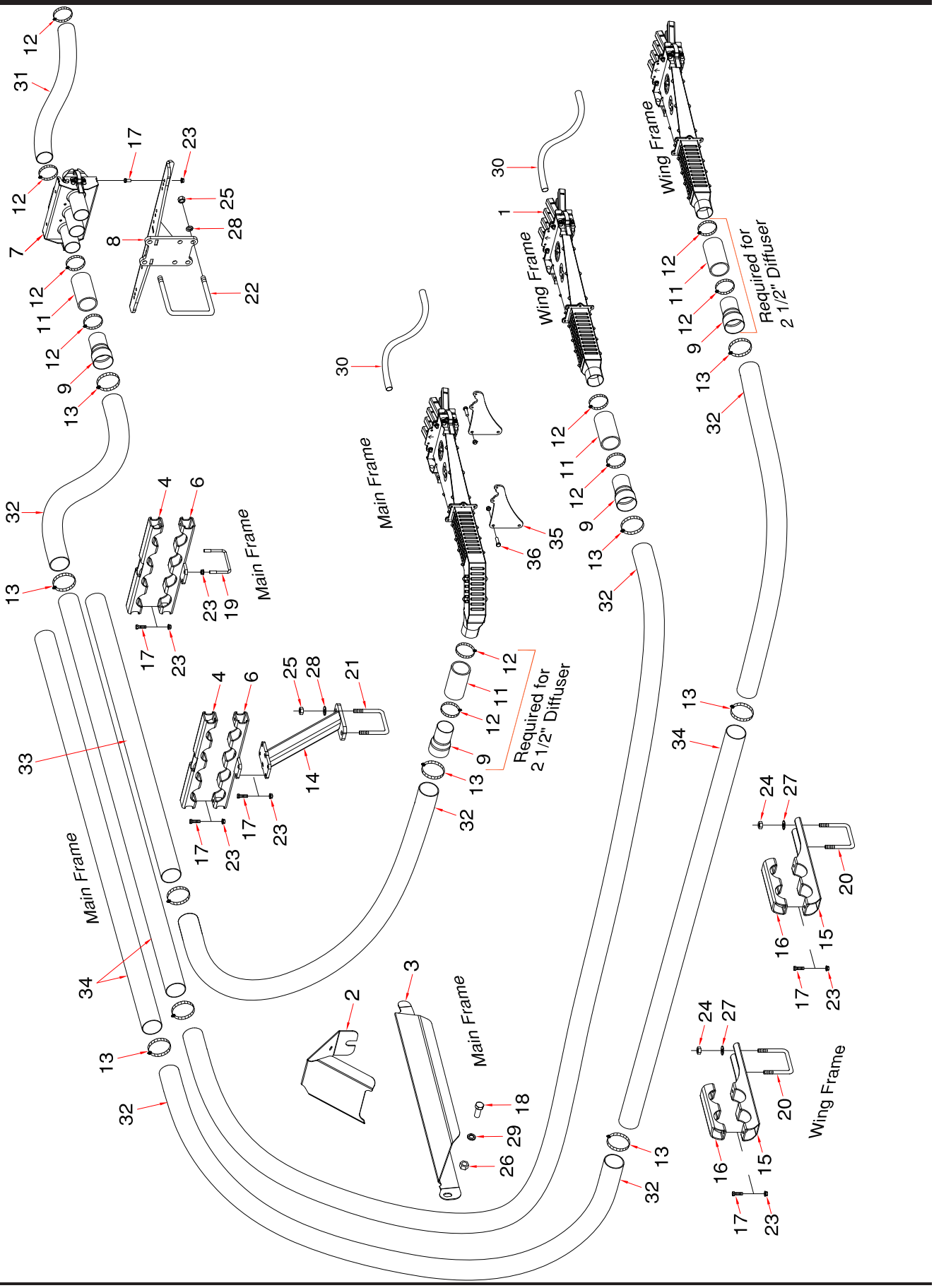

Single Shoot Tow Behind - 40 ft -12m - 6 primaries			
Item	**Part No.**	**Description**	**Qty**
		For 10 inch - 250mm spacing	
1	* * * * *	Divider Head Assembly (Refer to Divider Head Assembly for details)	
		10" spacing uses:	
		N66508 - Divider Head Assembly - 8 Outlet	6
2	S67250	Primary Hose Deflector	2
3	S66430	Primary Hose Hose Suport - Main - Left side (shown)	1
	S66435	Primary Hose Hose Suport - Main - Right side	1
4	N66321	Distribution Pipe Clamp - Main	4
5	* * * * *		
6	N66335	Distribution Pipe Clamp Bracket - Main	4
7	* * * * *	Quick Coupler - 3 Run (Refer to Quick Coupler Assembly for details)	2
8	N53203	Coupler Tower - Behind	1
9	N64095	Primary Hose Adapter	12
10	* * * * *		
11	N19428	Hose - 2.54 ID x 2.79 OD x 5 Lg	12
12	N11905	Hose Clamp - 2 1/2 - HC5-44 (Air Cart side uses 12)	36
13	N64099	Hose Clamp - 3 - SSTCH5-400	28
14	N66325	Distribution Pipe Stand - Main	2
15	N66339	Distribution Pipe Support Bracket - 2 pipe - Wing	4
16	N66359	Distribution Pipe Clamp - 2 pipe - Wing	4
17	W-187	Hex Bolt - 3/8 x 1 1/4 Lg	24
18	BW-10	Hex Bolt - 3/4 x 1 3/4 Lg	2
19	D-4932	U-Bolt - 3/8 x 4 1/8 x 3 UL	4
20	C-3932	U-Bolt - 1/2 x 4 x 7 1/4 UL	4
21	S39649	U-Bolt - 5/8 x 4 x 7 3/4 UL	2
22	F-4642	U-Bolt - 5/8 x 6 x 5 1/2 UL	2
23	S27987	Locknut - 3/8 Center Lock	32
24	W-516	Nut - 1/2	8
25	W-517	Nut - 5/8	8
26	W-518	Nut - 3/4	2
27	W-525	Lockwasher - 1/2	8
28	W-526	Lockwasher - 5/8	8
29	W-527	Lockwasher - 3/4	2
30	R480034	Hose - .929 ID x 1.169 OD/ft (75 ft roll) . . Prior to 2023	600
	N73085	Hose - 1 ID x 1.250 OD (100 ft roll) - 2023 to 2025	
	N75771	**Hose - 1 ID x 1.250 OD (100 ft roll) - BLACK (Seed) - 2026 to Present**	
31	N69294	Hose - 2 1/2 ID x 100 ft roll - **Black** (Air Cart side of couplers)	125
32	N75812	Hose - 3 ID x 100 ft roll - **Black** - (**Seed**)	100
33	N64092	Primary Pipe SS - 3 x 72 Lg	2
34	N64094	Primary Pipe SS - 3 x 96 Lg	6
35	S65382	Head Mounting Plate - Main	4
36	W-187	Hex Bolt - 3/8 x 1 1/4 Lg	8

Single Shoot - Tow Behind
50 ft - 15m - 6 primaries - 15 inch (380mm) Spacing

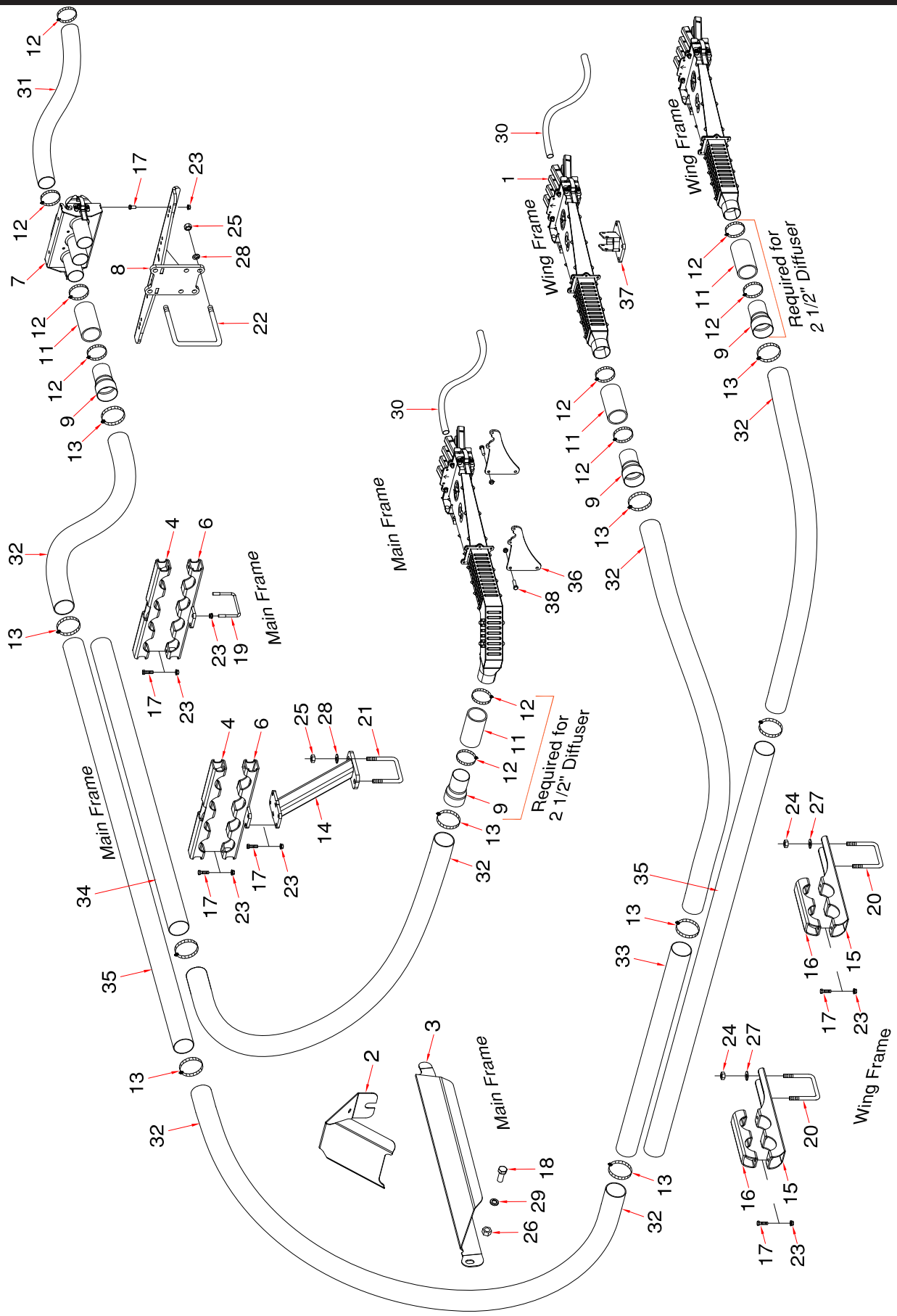

Single Shoot Tow Behind - 50 ft - 15m - 6 primaries

Item	Part No.	Description	Qty
		For 15 inch - 380mm spacing	
1	* * * * *	Divider Head Assembly (Refer to Divider Head Assembly for details)	
		15" spacing uses:	
		N66506 - Divider Head Assembly - 6 Outlet	2
		N66507 - Divider Head Assembly - 7 Outlet	4
2	S67250	Primary Hose Deflector	2
3	S66430	Primary Hose Hose Suport - Main - Left side (shown)	1
	S66435	Primary Hose Hose Suport - Main - Right side	1
4	N66321	Distribution Pipe Clamp - Main	4
5	* * * * *		
6	N66335	Distribution Pipe Clamp Bracket - Main	4
7	* * * * *	Quick Coupler - 3 Run (Refer to Quick Coupler Assembly for details)	2
8	N53203	Coupler Tower - Behind	1
9	N64095	Primary Hose Adapter	12
10	* * * * *		
11	N19428	Hose - 2.54 ID x 2.79 OD x 5 Lg	12
12	N11905	Hose Clamp - 2 1/2 - HC5-44 (Air Cart side uses 12)	36
13	N64099	Hose Clamp - 3 - SSTCH5-400	32
14	N66325	Distribution Pipe Stand - Main	2
15	N66339	Distribution Pipe Support Bracket - 2 pipe - Wing	4
16	N66359	Distribution Pipe Clamp - 2 pipe - Wing	4
17	W-187	Hex Bolt - 3/8 x 1 1/4 Lg.	24
18	BW-10	Hex Bolt - 3/4 x 1 3/4 Lg.	2
19	D-4932	U-Bolt - 3/8 x 4 1/8 x 3 UL	4
20	C-3932	U-Bolt - 1/2 x 4 x 7 1/4 UL	4
21	S39649	U-Bolt - 5/8 x 4 x 7 3/4 UL	2
22	F-4642	U-Bolt - 5/8 x 6 x 5 1/2 UL	2
23	S27987	Locknut - 3/8 Center Lock	32
24	W-516	Nut - 1/2	8
25	W-517	Nut - 5/8	8
26	W-518	Nut - 3/4	2
27	W-525	Lockwasher - 1/2	8
28	W-526	Lockwasher - 5/8	8
29	W-527	Lockwasher - 3/4	2
30	R480034	Hose - .929 ID x 1.169 OD/ft (75 ft roll) . . Prior to 2023	450
	N73085	Hose - 1 ID x 1.250 OD (100 ft roll) - 2023 to 2025	
	N75771	**Hose - 1 ID x 1.250 OD (100 ft roll) - BLACK (Seed) - 2026 to Present**	
31	N69294	Hose - 2 1/2 ID x 100 ft roll - **Black** (Air Cart side of couplers)	125
32	N75812	Hose - 3 ID x 100 ft roll - **Black** - (**Seed**)	100
33	N66396	Primary Pipe SS - 3 x 48 Lg	2
34	N64092	Primary Pipe SS - 3 x 72 Lg	2
35	N64094	Primary Pipe SS - 3 x 96 Lg	6
36	S65382	Head Mounting Plate - Main	4
37	N67202	Head Mounting Bracket - 30 Degree - Right (shown)	1
37A	N67200	Head Mounting Bracket - 30 Degree - Left	1
38	W-187	Hex Bolt - 3/8 x 1 1/4 Lg.	8

Single Shoot - Tow Behind
50 ft - 15m - 7 primaries - 10 and 12 inch (250 - 300mm) Spacing

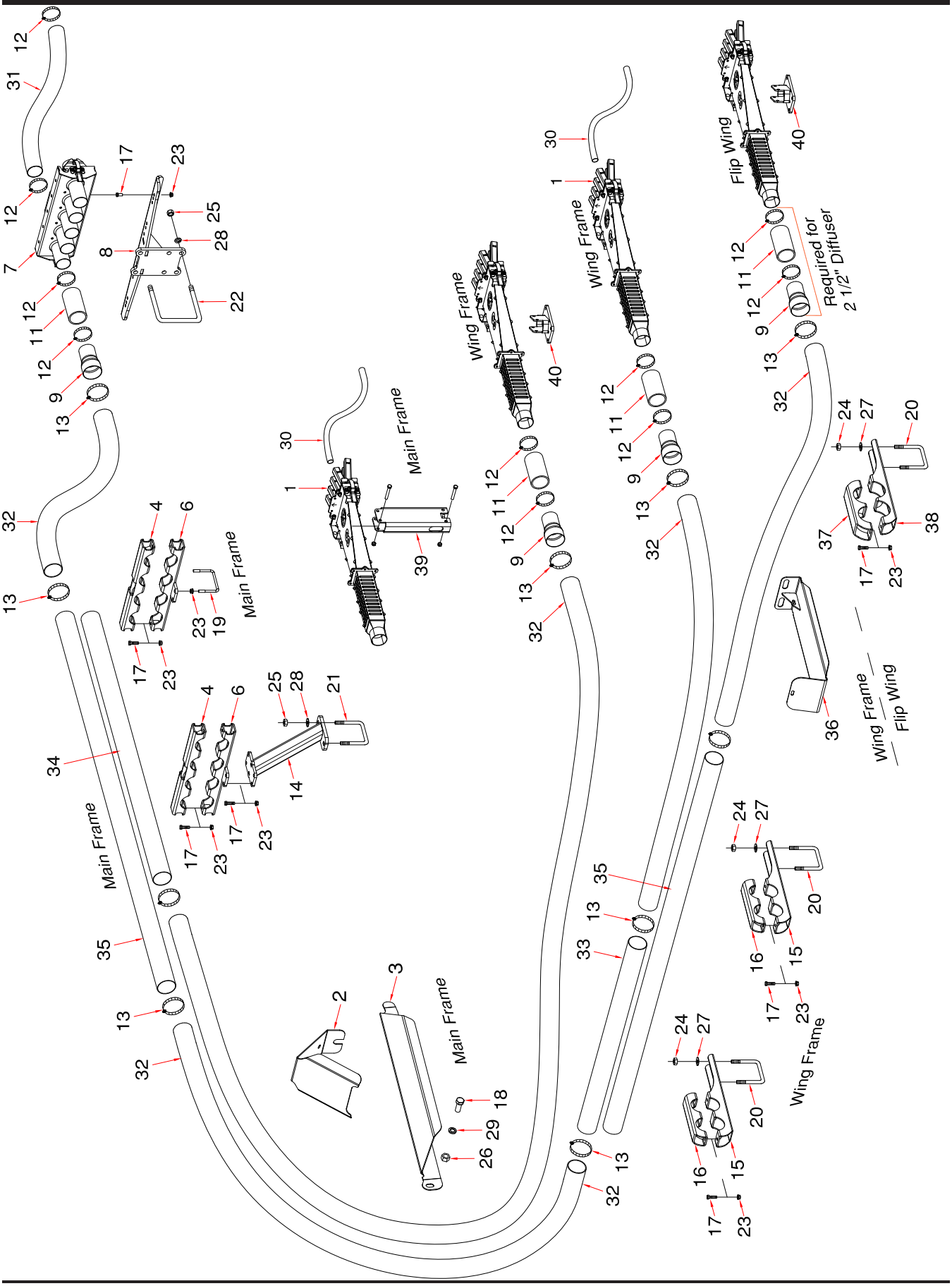

Single Shoot Tow Behind - 50 ft 7 primaries

Item	Part No.	Description	Qty
		For 10 and 12 inch - 250mm and 300mm spacing	
1	* * * * *	Divider Head Assembly (Refer to Divider Head Assembly for details)	
		10" spacing uses:	
		N66508 - Divider Head Assembly - 8 Outlet	3
		N66509 - Divider Head Assembly - 9 Outlet	4
		12" spacing uses:	
		N66507 - Divider Head Assembly - 7 Outlet	6
		N66508 - Divider Head Assembly - 8 Outlet	1
2	S67250	Primary Hose Deflector	2
3	S66430	Primary Hose Hose Suport - Main - Left side (shown)	1
	S66435	Primary Hose Hose Suport - Main - Right side	1
4	N66321	Distribution Pipe Clamp - Main	4
5	* * * * *		
6	N66335	Distribution Pipe Clamp Bracket - Main	4
7	* * * * *	Quick Coupler - 5 Run (Refer to Quick Coupler Assembly for details)	2
8	N53203	Coupler Tower - Behind	1
9	N64095	Primary Hose Adapter	14
10	* * * * *		
11	N19428	Hose - 2.54 ID x 2.79 OD x 5 Lg	14
12	N11905	Hose Clamp - 2 1/2 - HC5-44 (Air Cart side uses 14)	42
13	N64099	Hose Clamp - 3 - SSTCH5-400	34
14	N66325	Distribution Pipe Stand - Main	2
15	N66339	Distribution Pipe Support Bracket - 2 pipe - Wing	4
16	N66359	Distribution Pipe Clamp - 2 pipe - Wing	4
17	W-187	Hex Bolt - 3/8 x 1 1/4 Lg	28
18	BW-10	Hex Bolt - 3/4 x 1 3/4 Lg	2
19	D-4932	U-Bolt - 3/8 x 4 1/8 x 3 UL	4
20	C-3932	U-Bolt - 1/2 x 4 x 7 1/4 UL	12
21	S39649	U-Bolt - 5/8 x 4 x 7 3/4 UL	2
22	F-4642	U-Bolt - 5/8 x 6 x 5 1/2 UL	2
23	S27987	Locknut - 3/8 Center Lock	36
24	W-516	Nut - 1/2	24
25	W-517	Nut - 5/8	8
26	W-518	Nut - 3/4	2
27	W-525	Lockwasher - 1/2	24
28	W-526	Lockwasher - 5/8	8
29	W-527	Lockwasher - 3/4	2
30	R480034	Hose - .929 ID x 1.169 OD/ft (75 ft roll) . . 10"SP-675 ft . . 12"SP-600 ft . . Prior to 2023	
	N73085	Hose - 1 ID x 1.250 OD (100 ft roll) - 2023 to 2025	
	N75771	**Hose - 1 ID x 1.250 OD (100 ft roll) - BLACK (Seed) - 2026 to Present**	
31	N69294	Hose - 2 1/2 ID x 100 ft roll - **Black** (Air Cart side of couplers)	150
32	N75812	Hose - 3 ID x 100 ft roll - **Black** - (**Seed**)	150
33	N66396	Primary Pipe SS - 3 x 48 Lg	2
34	N64092	Primary Pipe SS - 3 x 72 Lg	2
35	N64094	Primary Pipe SS - 3 x 96 Lg	6
36	N67295	Primary Hose Guide Plate - Wing	2
37	N66374	Distribution Hose Clamp - Wing - 3 5/8 Dia	2
38	N66375	Distribution Hose Support Bracket - Wing - 3 5/8 Dia	2
39	S65390	Divider Head Pedestal - Main Frame	1
40	N67202	Head Mounting Bracket - 30 Degree - Right (shown)	1
40A	N67200	Head Mounting Bracket - 30 Degree - Left	1

Single Shoot - Tow Behind
60 ft - 18m - 8 primaries - 10, 12 and 15 inch (250 - 300 - 380mm) Spacing

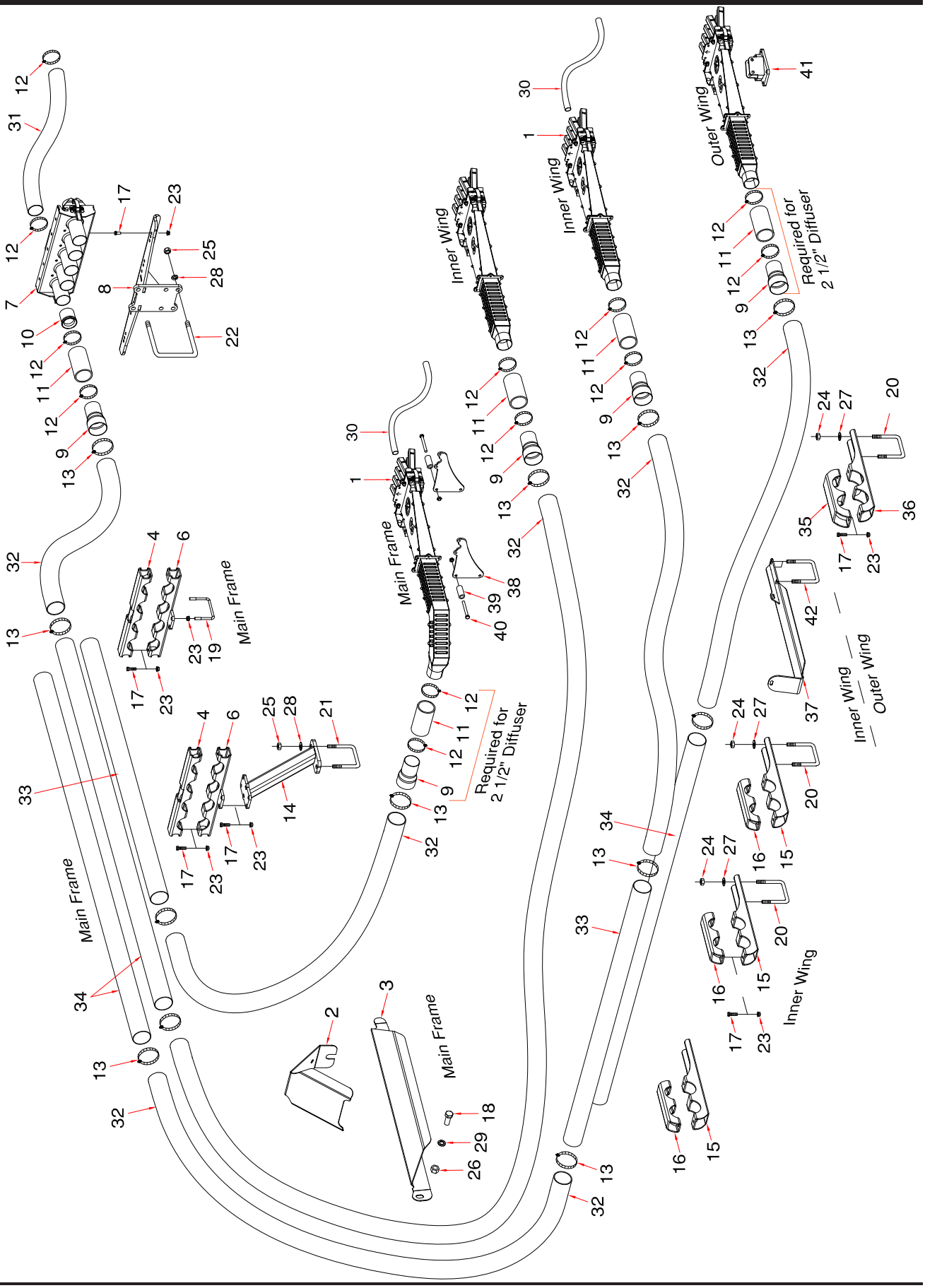

Single Shoot Tow Behind - 60 ft - 18m - 8 primaries

Item	Part No.	Description	Qty
		For 10, 12 and 15 inch - 250mm, 300mm and 380mm spacing	
1	* * * * *	Divider Head Assembly (Refer to Divider Head Assembly for details)	
		10" spacing uses:	
		N66509 - Divider Head Assembly - 9 Outlet	8
		12" spacing uses:	
		N66507 - Divider Head Assembly - 7 Outlet	4
		N66508 - Divider Head Assembly - 8 Outlet	4
		15" spacing uses:	
		N66506 - Divider Head Assembly - 6 Outlet	8
2	S67250	Primary Hose Deflector	2
3	S66430	Primary Hose Hose Suport - Main - Left side (shown)	1
	S66435	Primary Hose Hose Suport - Main - Right side	1
4	N66321	Distribution Pipe Clamp - Main	4
5	* * * * *		
6	N66335	Distribution Pipe Clamp Bracket - Main	4
7	* * * * *	Quick Coupler - 5 Run (Refer to Quick Coupler Assembly for details)	2
8	N53203	Coupler Tower - Behind	1
9	N64095	Primary Hose Adapter	16
10	N37920	Equalizer	0
11	N19428	Hose - 2.54 ID x 2.79 OD x 5 Lg	16
12	N11905	Hose Clamp - 2 1/2 - HC5-44 (Air Cart side uses 16)	48
13	N64099	Hose Clamp - 3 - SSTCH5-400	40
14	N66325	Distribution Pipe Stand - Main	2
15	N66339	Distribution Pipe Support Bracket - 2 pipe - Wing - Wing	6
16	N66359	Distribution Pipe Clamp - 2 pipe - Wing - Wing	6
17	W-187	Hex Bolt - 3/8 x 1 1/4 Lg	32
18	BW-10	Hex Bolt - 3/4 x 1 3/4 Lg	2
19	D-4932	U-Bolt - 3/8 x 4 1/8 x 3 UL	4
20	C-3932	U-Bolt - 1/2 x 4 x 7 1/4 UL	8
21	S39649	U-Bolt - 5/8 x 4 x 7 3/4 UL	2
22	F-4642	U-Bolt - 5/8 x 6 x 5 1/2 UL	2
23	S27987	Locknut - 3/8 Center Lock	40
24	W-516	Nut - 1/2	16
25	W-517	Nut - 5/8	8
26	W-518	Nut - 3/4	2
27	W-525	Lockwasher - 1/2	16
28	W-526	Lockwasher - 5/8	8
29	W-527	Lockwasher - 3/4	2
30	R480034	Hose - .929 ID x 1.169 OD/ft (75 ft roll) 10"SP-825 ft . . 12"SP-675 ft . . 15"SP-600 ft	
	N73085	Hose - 1 ID x 1.250 OD (100 ft roll) - 2023 to 2025	
	N75771	**Hose - 1 ID x 1.250 OD (100 ft roll) - BLACK (Seed) - 2026 to Present**	
31	N69294	Hose - 2 1/2 ID x 100 ft roll - **Black** (Air Cart side of couplers)	175
32	N75812	Hose - 3 ID x 100 ft roll - **Black** - (**Seed**)	150
33	N64092	Primary Pipe SS - 3 x 72 Lg	4
34	N64094	Primary Pipe SS - 3 x 96 Lg	6
35	N66374	Distribution Hose Clamp - Wing - 3 5/8 Dia	2
36	N66375	Distribution Hose Support Bracket - Wing - 3 5/8 Dia	2
37	N66395	Primary Hose Guide Plate - Wing	2
38	S65382	Head Mounting Plate - Main	4
39	N50842	Bushings - .385 ID x 5/8 OD x 3 1/4 Lg	8
40	S-1299	Hex Bolt - 3/8 x 4 1/2 Lg	8
41	N67200	Head Mounting Bracket - 30 Degree - Left (shown)	1
41A	N67202	Head Mounting Bracket - 30 Degree - Right	1
42	N19723	U-Bolt - 3/8 x 4 1/16 x 6 15/16 UL	8

Single Shoot - Tow Behind
70 ft - 21m - 8 primaries - 10, 12 and 15 inch (250 - 300 - 380mm) Spacing

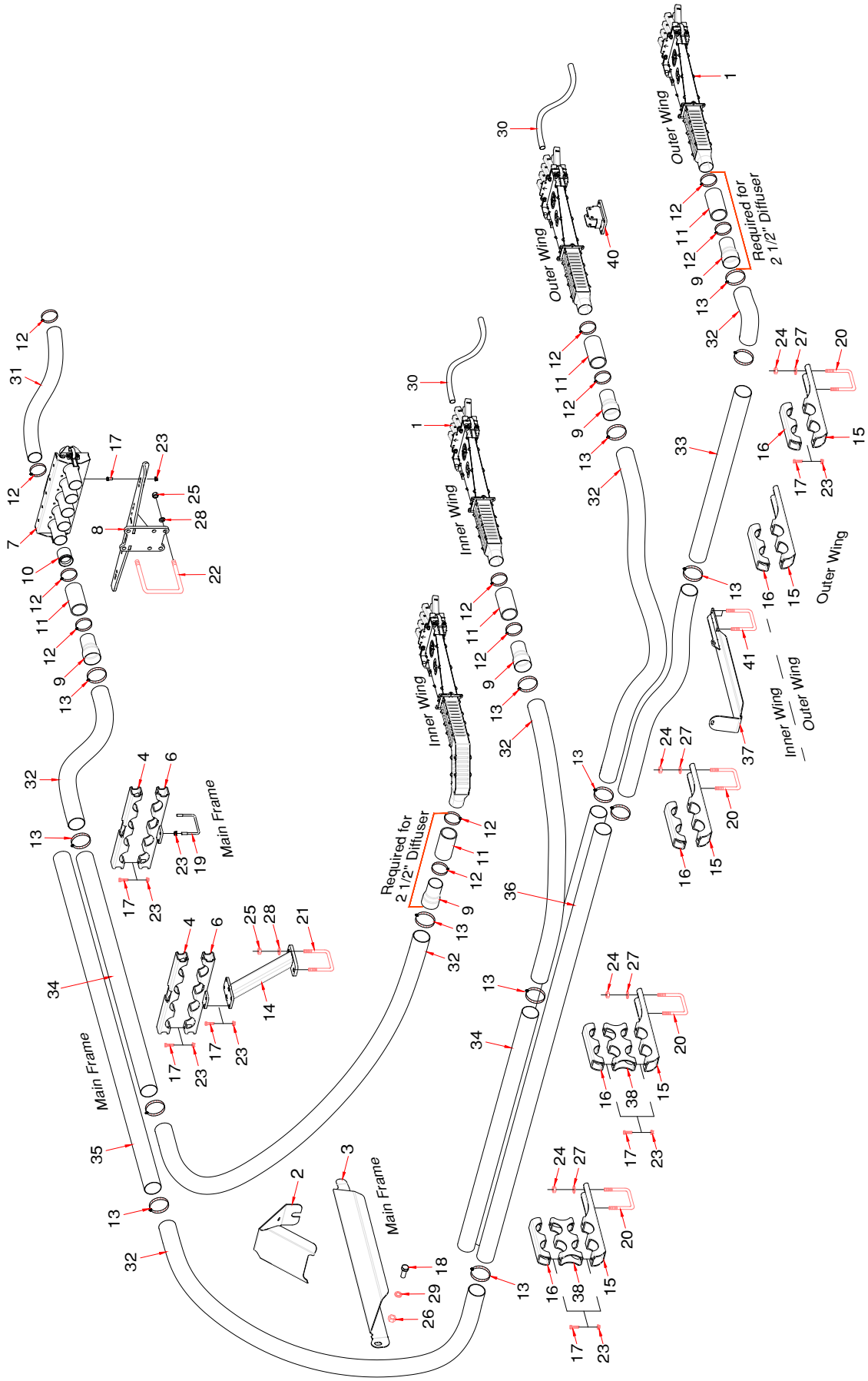

Single Shoot Tow Behind - 70 ft -21m - 8 primaries

Item	Part No.	Description	Qty
		For 10, 12 and 15 inch - 250mm, 300mm and 380mm spacing	
1	* * * * *	Divider Head Assembly (Refer to Divider Head Assembly for details)	
1	* * * * *	Divider Head Assembly (Refer to Divider Head Assembly for details)	
		10" spacing uses:	
		N66510 - Divider Head Assembly - 10 Outlet	4
		* * * * * - Divider Head Assembly - 11 Outlet	4
		12" spacing uses:	
		N66508 - Divider Head Assembly - 8 Outlet	2
		N66509 - Divider Head Assembly - 9 Outlet	6
		15" spacing uses:	
		N66507 - Divider Head Assembly - 7 Outlet	8
2	S67250	Primary Hose Deflector	2
3	S66430	Primary Hose Hose Suport - Main - Left side (shown)	1
	S66435	Primary Hose Hose Suport - Main - Right side	1
4	N66321	Distribution Pipe Clamp - Main	4
5	* * * * *		
6	N66335	Distribution Pipe Clamp Bracket - Main	4
7	* * * * *	Quick Coupler - 5 Run (Refer to Quick Coupler Assembly for details)	2
8	N53203	Coupler Tower - Behind	1
9	N64095	Primary Hose Adapter	16
10	N37920	Equalizer	0
11	N19428	Hose - 2.54 ID x 2.79 OD x 5 Lg	16
12	N11905	Hose Clamp - 2 1/2 - HC5-44 (Air Cart side uses 18)	50
13	N64099	Hose Clamp - 3 - SSTCH5-400	48
14	N66325	Distribution Pipe Stand - Main	2
15	N66339	Distribution Pipe Support Bracket - Wing	10
16	N66359	Distribution Pipe Clamp - Wing	4
17	W-187	Hex Bolt - 3/8 x 1 1/4 Lg	44
18	BW-10	Hex Bolt - 3/4 x 1 3/4 Lg	2
19	D-4932	U-Bolt - 3/8 x 4 1/8 x 3 UL	4
20	C-3932	U-Bolt - 1/2 x 4 x 7 1/4 UL	10
21	S39649	U-Bolt - 5/8 x 4 x 7 3/4 UL	2
22	F-4642	U-Bolt - 5/8 x 6 x 5 1/2 UL	2
23	S27987	Locknut - 3/8 Center Lock	52
24	W-516	Nut - 1/2	20
25	W-517	Nut - 5/8	8
26	W-518	Nut - 3/4	2
27	W-525	Lockwasher - 1/2	20
28	W-526	Lockwasher - 5/8	8
29	W-527	Lockwasher - 3/4	2
30	R480034	Hose - .929 ID x 1.169 OD/ft (75 ft roll) 10"SP-975 ft . . 12"SP-825 ft . . 15"SP-675 ft	
	N73085	Hose - 1 ID x 1.250 OD (100 ft roll) - 2023 to 2025	
	N75771	**Hose - 1 ID x 1.250 OD (100 ft roll) - BLACK (Seed) - 2026 to Present**	
31	N69294	Hose - 2 1/2 ID x 100 ft roll - **Black** (Air Cart side of couplers)	180
32	N75812	Hose - 3 ID x 100 ft roll - **Black** - (**Seed**)	175
33	N66396	Primary Pipe SS - 3 x 48 Lg	2
34	N64092	Primary Pipe SS - 3 x 72 Lg	4
35	N64094	Primary Pipe SS - 3 x 96 Lg	6
36	N64096	Primary Pipe SS - 3 x 120 Lg	4
37	N66395	Primary Hose Guide Plate	2
38	N66358	Distribution Pipe Spacer - 2 pipe - Wing	4
39	* * * * *		
40	N67640	Head Mounting Bracket - Straight	2
41	N19723	U-Bolt - 3/8 x 4 1/16 x 6 15/16 UL	8

Single Shoot - Tow Behind
70 ft - 21m - 9 primaries - 10, 12 and 15 inch (250 - 300 - 380mm) Spacing

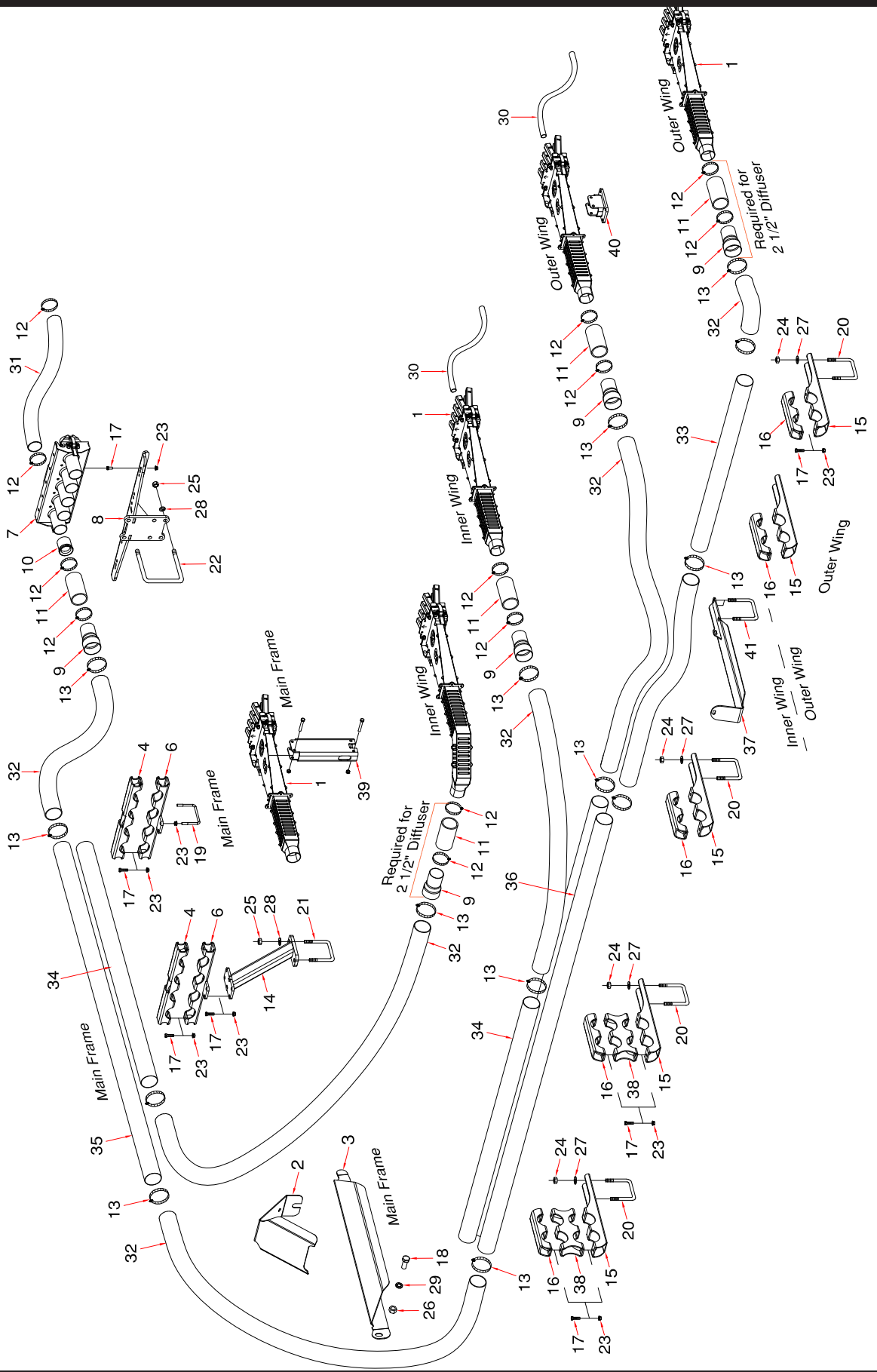

Single Shoot Tow Behind - 70 ft -21m - 9 primaries

Item	Part No.	Description	Qty
		For 10, 12 and 15 inch - 250mm, 300mm and 380mm spacing	
1	* * * * *	Divider Head Assembly (Refer to Divider Head Assembly for details)	
		10" spacing uses:	
		N66509 - Divider Head Assembly - 9 Outlet	6
		N66510 - Divider Head Assembly - 10 Outlet	3
		12" spacing uses:	
		N66507 - Divider Head Assembly - 7 Outlet	2
		N66508 - Divider Head Assembly - 8 Outlet	7
		15" spacing uses:	
		N66506 - Divider Head Assembly - 6 Outlet	7
		N66507 - Divider Head Assembly - 7 Outlet	2
2	S67250	Primary Hose Deflector	2
3	S66430	Primary Hose Hose Suport - Main - Left side (shown)	1
	S66435	Primary Hose Hose Suport - Main - Right side	1
4	N66321	Distribution Pipe Clamp - Main	4
5	* * * * *		
6	N66335	Distribution Pipe Clamp Bracket - Main	4
7	* * * * *	Quick Coupler - 5 Run (Refer to Quick Coupler Assembly for details)	2
8	N53203	Coupler Tower - Behind	1
9	N64095	Primary Hose Adapter	18
10	N37920	Equalizer	0
11	N19428	Hose - 2.54 ID x 2.79 OD x 5 Lg	18
12	N11905	Hose Clamp - 2 1/2 - HC5-44 (Air Cart side uses 18)	54
13	N64099	Hose Clamp - 3 - SSTCH5-400	50
14	N66325	Distribution Pipe Stand - Main	2
15	N66339	Distribution Pipe Support Bracket - Wing	10
16	N66359	Distribution Pipe Clamp - Wing	4
17	W-187	Hex Bolt - 3/8 x 1 1/4 Lg	44
18	BW-10	Hex Bolt - 3/4 x 1 3/4 Lg	2
19	D-4932	U-Bolt - 3/8 x 4 1/8 x 3 UL	4
20	C-3932	U-Bolt - 1/2 x 4 x 7 1/4 UL	10
21	S39649	U-Bolt - 5/8 x 4 x 7 3/4 UL	2
22	F-4642	U-Bolt - 5/8 x 6 x 5 1/2 UL	2
23	S27987	Locknut - 3/8 Center Lock	52
24	W-516	Nut - 1/2	20
25	W-517	Nut - 5/8	8
26	W-518	Nut - 3/4	2
27	W-525	Lockwasher - 1/2	20
28	W-526	Lockwasher - 5/8	8
29	W-527	Lockwasher - 3/4	2
30	R480034	Hose - .929 ID x 1.169 OD/ft (75 ft roll) 10"SP-975 ft . . 12"SP-825 ft . . 15"SP-675 ft	
	N73085	Hose - 1 ID x 1.250 OD (100 ft roll) - 2023 to 2025	
	N75771	**Hose - 1 ID x 1.250 OD (100 ft roll) - BLACK (Seed) - 2026 to Present**	
31	N69294	Hose - 2 1/2 ID x 100 ft roll - **Black** (Air Cart side of couplers)	180
32	N75812	Hose - 3 ID x 100 ft roll - **Black** - (**Seed**)	175
33	N66396	Primary Pipe SS - 3 x 48 Lg	2
34	N64092	Primary Pipe SS - 3 x 72 Lg	4
35	N64094	Primary Pipe SS - 3 x 96 Lg	6
36	N64096	Primary Pipe SS - 3 x 120 Lg	4
37	N66395	Primary Hose Guide Plate	2
38	N66358	Distribution Pipe Spacer - 2 pipe - Wing	4
39	S65390	Divider Head Pedestal - Main Frame	1
40	N67640	Head Mounting Bracket - Straight	2
41	N19723	U-Bolt - 3/8 x 4 1/16 x 6 15/16 UL	8

Single Shoot - Tow Behind
80 ft - 24m - 10 primaries - 10 and 12 inch (250 - 300) Spacing

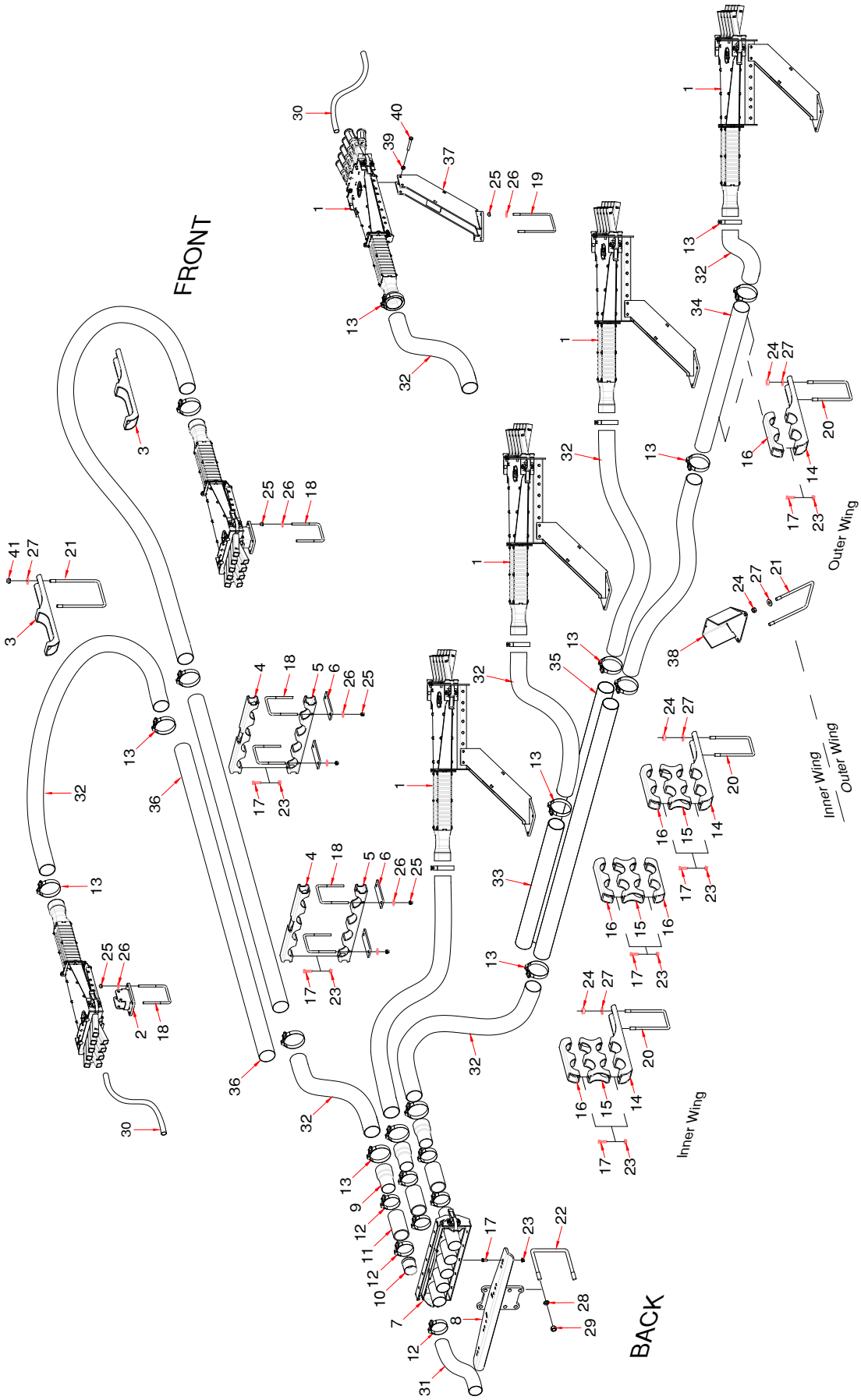

Single Shoot Tow Behind - 80 ft - 24m - 10 primaries

Item	Part No.	Description	Qty
		For 10 and 12 inch - 250mm and 300mm spacing	
1	* * * * *	Divider Head Assembly (Refer to Divider Head Assembly for details)	
	80ft	**10" spacing uses: 97 runs**	
		N66509 - Divider Head Assembly - 9 Outlet	3
		N66510 - Divider Head Assembly - 10 Outlet	7
	80ft	**12" spacing uses: 82 runs**	
		N66508 - Divider Head Assembly - 8 Outlet	8
		N66509 - Divider Head Assembly - 9 Outlet	2
2	N67640	Head Mounting Bracket - Straight	2
3	N72832	Distribution Pipe Support	2
4	N66321	Distribution Pipe Clamp - Main	2
5	N72833	Distribution Pipe Clamp - Front Carriage	2
6	N72834	Clamp Plat - Main	4
7	* * * * *	Quick Coupler - 5 Run (Refer to Quick Coupler Assembly for details)	2
8	N53203	Coupler Tower - Behind	1
9	N64095	Primary Hose Adapter	10
10	N37920	Equalizer	0
11	N19428	Hose - 2.54 ID x 2.79 OD x 5 Lg	10
12	N73068	Hose Clamp -T-Bolt - 2 9/16 - 2 7/8	40
13	N64099	Hose Clamp - 3 - SSTCH5-400 (Range 3 1/8 - 3 3/4)	40
14	N66339	Distribution Pipe Support Bracket - Wing	8
15	N66358	Distribution Pipe Spacer - 2 pipe - Wing	8
16	N66359	Distribution Pipe Clamp - Wing	12
17	W-187	Hex Bolt - 3/8 x 1 1/4 Lg	40
18	N15098	U-Bolt - 3/8 x 4 x 5 UL	8
19	N19723	U-Bolt - 3/8 x 4 1/16 x 6 15/16 UL	24
20	C-3932	U-Bolt - 1/2 x 4 x 7 1/4 UL	8
21	H21437	U-Bolt - 1/2 x 6 x 9 UL	2
22	C-219	U-Bolt - 5/8 x 4 x 5 9/16 UL	2
23	S27987	Locknut - 3/8 Center Lock	40
24	S47110	Lock Nut - 1/2 Center Lock	20
25	10229	Locknut - 3/8 Nylock	48
26	W-538	Flat Washer - 7/16	48
27	S-766	Flat Washer - 1/2	20
28	W-526	Lockwasher - 5/8	8
29	W-517	Nut - 5/8	8
30	N73085	Hose - 1 ID x 1.250 OD (100 ft roll) - 2023 to 2025	12
	N75771	**Hose - 1 ID x 1.250 OD (100 ft roll) - BLACK (Seed) - 2026 to Present**	
31	N69294	Hose - 2 1/2 ID x 100 ft roll - **Black** (Air Cart side of couplers)	150ft
32	N75812	Hose - 3 ID x 100 ft roll - **Black**	200ft
33	S72398	Primary Pipe SS - 3 x 36 Lg	2
34	N66396	Primary Pipe SS - 3 x 48 Lg	2
35	N64092	Primary Pipe SS - 3 x 72 Lg	4
36	N64094	Primary Pipe SS - 3 x 96 Lg	2
37	S72391	Mount Bracket	8
38	S72979	Hose Guard	2
39	M-3388	Locknut - 3/8 Unitorque	20
40	W-480	Hex Bolt - 3/8 x 2 1/2 Lg	20
41	C26701	Locknut - 1/2 Nylock	4

Single Shoot - Tow Between
40 ft - 12m - 5 primaries - 12 and 15 inch (300 - 380mm) Spacing

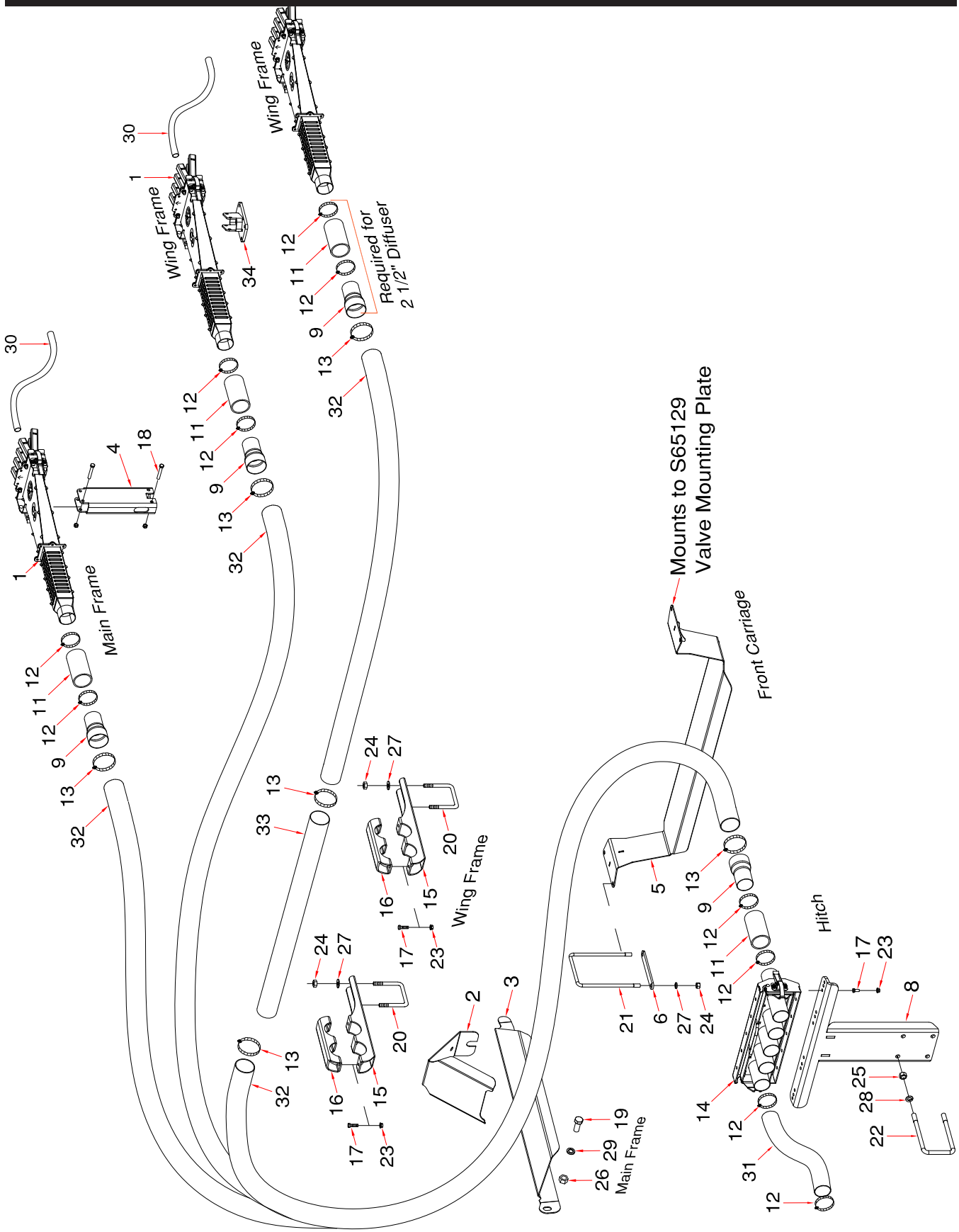

Single Shoot Tow Between - 40 ft - 12m - 5 primaries

Item	Part No.	Description	Qty
		For 12 and 15 inch - 300mm and 380mm spacing	
1	* * * * *	Divider Head Assembly (Refer to Divider Head Assembly for details)	
		12" spacing uses:	
		N66508 - Divider Head Assembly - 8 Outlet	5
		15" spacing uses:	
		N66506 - Divider Head Assembly - 6 Outlet	3
		N66507 - Divider Head Assembly - 7 Outlet	2
2	S67250	Primary Hose Deflector	2
3	S66430	Primary Hose Hose Suport - Main - Left side (shown)	1
	S66435	Primary Hose Hose Suport - Main - Right side	1
4	S65390	Divider Head Pedestal - Main Frame	1
5	N67245	Primary Hose Hose Suport - Between	1
6	N67274	Spacer Plate	1
7	N67275	Kit - Primary Hose Hose Suport - Between (Includes items 5, 6, 21, 24 and 27)	
8	N51962	Coupler Tower - Between	1
9	N64095	Primary Hose Adapter	10
10	* * * * *		
11	N19428	Hose - 2.54 ID x 2.79 OD x 5 Lg	10
12	N11905	Hose Clamp - 2 1/2 - HC5-44 (Air Cart side uses 10)	30
13	N64099	Hose Clamp - 3 - SSTCH5-400	14
14	* * * * *	Quick Coupler - 5 Run (Refer to Quick Coupler Assembly for details)	1
15	N66339	Distribution Pipe Support Bracket - 2 pipe - Wing	4
16	N66359	Distribution Pipe Clamp - 2 pipe - Wing	4
17	W-187	Hex Bolt - 3/8 x 1 1/4 Lg	6
18	W-480	Hex Bolt - 3/8 x 2 1/2 Lg (Refer to Divider Head Assembly for details)	
19	BW-10	Hex Bolt - 3/4 x 1 3/4 Lg	2
20	C-3932	U-Bolt - 1/2 x 4 x 7 1/4 UL	4
21	H25628	U-Bolt - 1/2 x 6 1/16 x 9 3/8 UL	1
22	S39649	U-Bolt - 5/8 x 4 x 7 3/4 UL	2
23	S27987	Locknut - 3/8 Center Lock	6
24	W-516	Nut - 1/2	10
25	W-517	Nut - 5/8	4
26	W-518	Nut - 3/4	2
27	W-525	Lockwasher - 1/2	10
28	W-526	Lockwasher - 5/8	4
29	W-527	Lockwasher - 3/4	2
30	R480034	Hose - .929 ID x 1.169 OD/ft (75 ft roll) . . 12"SP-450 ft . . 15"SP-375 ft . . Prior to 2023	
	N73085	Hose - 1 ID x 1.250 OD (100 ft roll) - 2023 to 2025	
	N75771	**Hose - 1 ID x 1.250 OD (100 ft roll) - BLACK (Seed) - 2026 to Present**	
31	N69294	Hose - 2 1/2 ID x 100 ft roll - **Black** (Air Cart side of couplers)	70
32	N75812	Hose - 3 ID x 100 ft roll - **Black** - (**Seed**)	100
33	N66396	Primary Pipe SS - 3 x 48 Lg	2
34	N67202	Head Mounting Bracket - 30 Degree - Right (shown)	1
34A	N67200	Head Mounting Bracket - 30 Degree - Left	1

Single Shoot - Tow Between
40 ft - 12m - 6 primaries - 10 inch (250mm) Spacing

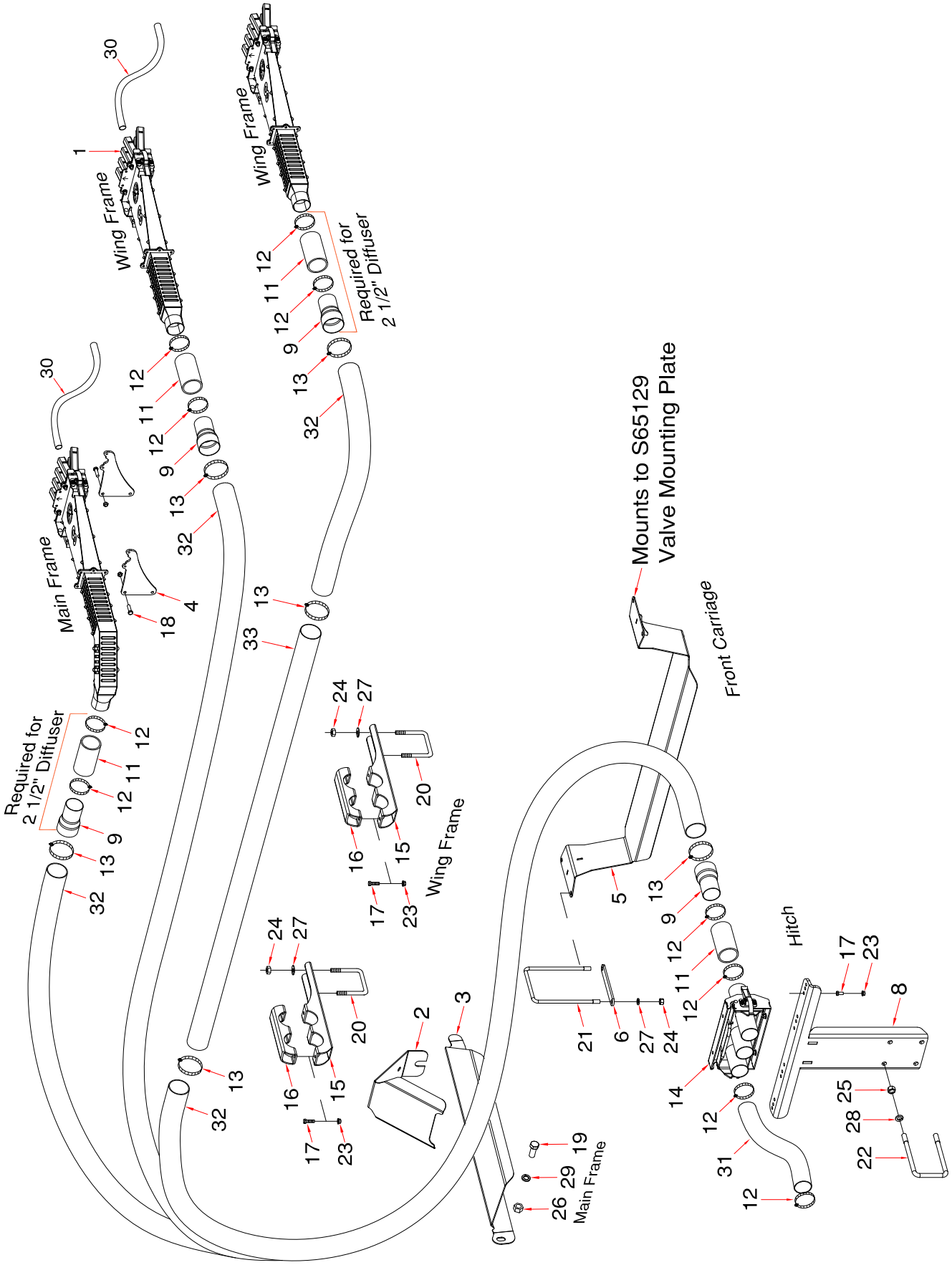

Single Shoot Tow Between - 40 ft - 12m - 6 primaries

Item	Part No.	Description	Qty
		For 10 inch - 250mm spacing	
1	* * * * *	Divider Head Assembly (Refer to Divider Head Assembly for details)	
		10" spacing:	
		N66508 - Divider Head Assembly - 8 Outlet	6
2	S67250	Primary Hose Deflector	2
3	S66430	Primary Hose Hose Suport - Main - Left side (shown)	1
	S66435	Primary Hose Hose Suport - Main - Right side	1
4	S65382	Head Mounting Plate - Main	4
5	N67245	Primary Hose Hose Suport - Between	1
6	N67274	Spacer Plate	1
7	N67275	Kit - Primary Hose Hose Suport - Between (Includes items 5, 6, 21, 24 and 27)	
8	N51962	Coupler Tower - Between	1
9	N64095	Primary Hose Adapter	12
10	* * * * *		
11	N19428	Hose - 2.54 ID x 2.79 OD x 5 Lg	12
12	N11905	Hose Clamp - 2 1/2 - HC5-44 (Air Cart side uses 12)	36
13	N64099	Hose Clamp - 3 - SSTCH5-400	16
14	* * * * *	Quick Coupler - 3 Run (Refer to Quick Coupler Assembly for details)	2
15	N66339	Distribution Pipe Support Bracket - 2 pipe - Wing	4
16	N66359	Distribution Pipe Clamp - 2 pipe - Wing	4
17	W-187	Hex Bolt - 3/8 x 1 1/4 Lg	12
18	W-187	Hex Bolt - 3/8 x 1 1/4 Lg (Refer to Divider Head Assembly for details)	8
19	BW-10	Hex Bolt - 3/4 x 1 3/4 Lg	2
20	C-3932	U-Bolt - 1/2 x 4 x 7 1/4 UL	4
21	H25628	U-Bolt - 1/2 x 6 1/16 x 9 3/8 UL	1
22	S39649	U-Bolt - 5/8 x 4 x 7 3/4 UL	2
23	S27987	Locknut - 3/8 Center Lock	12
24	W-516	Nut - 1/2	10
25	W-517	Nut - 5/8	4
26	W-518	Nut - 3/4	2
27	W-525	Lockwasher - 1/2	10
28	W-526	Lockwasher - 5/8	4
29	W-527	Lockwasher - 3/4	2
30	R480034	Hose - .929 ID x 1.169 OD/ft (75 ft roll) . . 10"SP-600 ft . . Prior to 2023	600
	N73085	Hose - 1 ID x 1.250 OD (100 ft roll) - 2023 to 2025	
	N75771	**Hose - 1 ID x 1.250 OD (100 ft roll) - BLACK (Seed) - 2026 to Present**	
31	N69294	Hose - 2 1/2 ID x 100 ft roll - **Black** (Air Cart side of couplers)	84
32	N75812	Hose - 3 ID x 100 ft roll - **Black** - (**Seed**)	125
33	N64094	Primary Pipe SS - 3 x 96 Lg	2

Single Shoot - Tow Between
50 ft - 15m - 6 primaries - 15 inch (380mm) Spacing

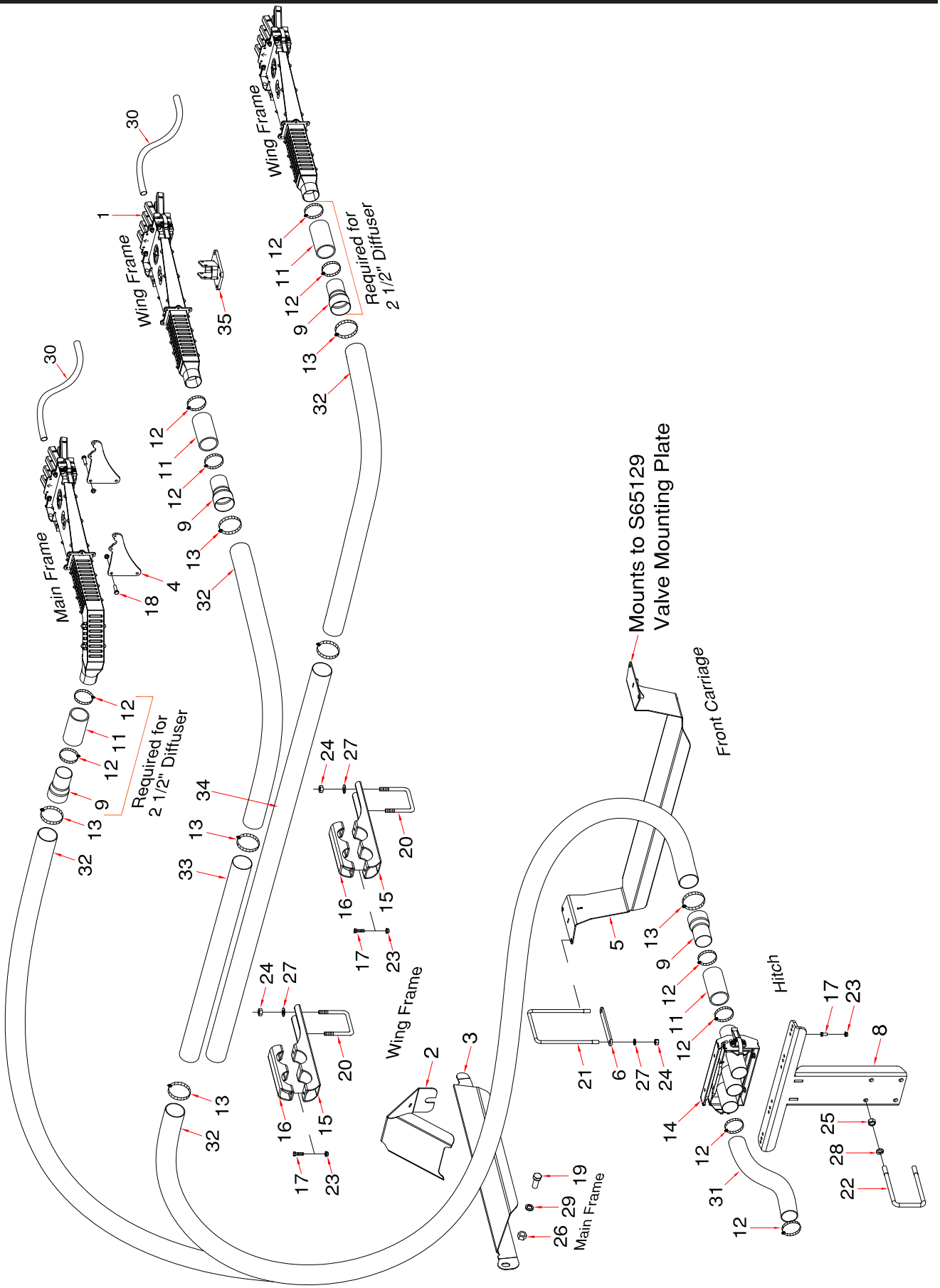

Single Shoot Tow Between - 50 ft - 15m - 6 primaries

Item	Part No.	Description	Qty
		For 15 inch - 380mm spacing	
1	* * * * *	Divider Head Assembly (Refer to Divider Head Assembly for details)	
		15" spacing uses:	
		N66506 - Divider Head Assembly - 6 Outlet	2
		N66507 - Divider Head Assembly - 7 Outlet	4
2	S67250	Primary Hose Deflector	2
3	S66430	Primary Hose Hose Suport - Main - Left side (shown)	1
	S66435	Primary Hose Hose Suport - Main - Right side	1
4	S65382	Head Mounting Plate - Main	4
5	N67245	Primary Hose Hose Suport - Between	1
6	N67274	Spacer Plate	1
7	N67275	Kit - Primary Hose Hose Suport - Between (Includes items 5, 6, 21, 24 and 27)	
8	N51962	Coupler Tower - Between	1
9	N64095	Primary Hose Adapter	12
10	* * * * *		
11	N19428	Hose - 2.54 ID x 2.79 OD x 5 Lg	12
12	N11905	Hose Clamp - 2 1/2 - HC5-44 (Air Cart side uses 12)	36
13	N64099	Hose Clamp - 3 - SSTCH5-400	20
14	* * * * *	Quick Coupler - 3 Run (Refer to Quick Coupler Assembly for details)	2
15	N66339	Distribution Pipe Support Bracket - 2 pipe - Wing	4
16	N66359	Distribution Pipe Clamp - 2 pipe - Wing	4
17	W-187	Hex Bolt - 3/8 x 1 1/4 Lg.	12
18	W-187	Hex Bolt - 3/8 x 1 1/4 Lg (Refer to Divider Head Assembly for details)	8
19	BW-10	Hex Bolt - 3/4 x 1 3/4 Lg.	2
20	C-3932	U-Bolt - 1/2 x 4 x 7 1/4 UL	4
21	H25628	U-Bolt - 1/2 x 6 1/16 x 9 3/8 UL	1
22	S39649	U-Bolt - 5/8 x 4 x 7 3/4 UL	2
23	S27987	Locknut - 3/8 Center Lock	12
24	W-516	Nut - 1/2	10
25	W-517	Nut - 5/8	4
26	W-518	Nut - 3/4	2
27	W-525	Lockwasher - 1/2	10
28	W-526	Lockwasher - 5/8	4
29	W-527	Lockwasher - 3/4	2
30	R480034	Hose - .929 ID x 1.169 OD/ft (75 ft roll) . . Prior to 2023	450
	N73085	Hose - 1 ID x 1.250 OD (100 ft roll) - 2023 to 2025	
	N75771	**Hose - 1 ID x 1.250 OD (100 ft roll) - BLACK (Seed) - 2026 to Present**	
31	N69294	Hose - 2 1/2 ID x 100 ft roll - **Black** (Air Cart side of couplers)	84
32	N75812	Hose - 3 ID x 100 ft roll - **Black** - (**Seed**)	125
33	N66396	Primary Pipe SS - 3 x 48 Lg	2
34	N64094	Primary Pipe SS - 3 x 96 Lg	2
35	N67202	Head Mounting Bracket - 30 Degree - Right (shown)	1
35A	N67200	Head Mounting Bracket - 30 Degree - Left	1

Single Shoot - Tow Between
50 ft - 15m - 7 primaries - 10 and 12 inch (250 - 300mm) Spacing

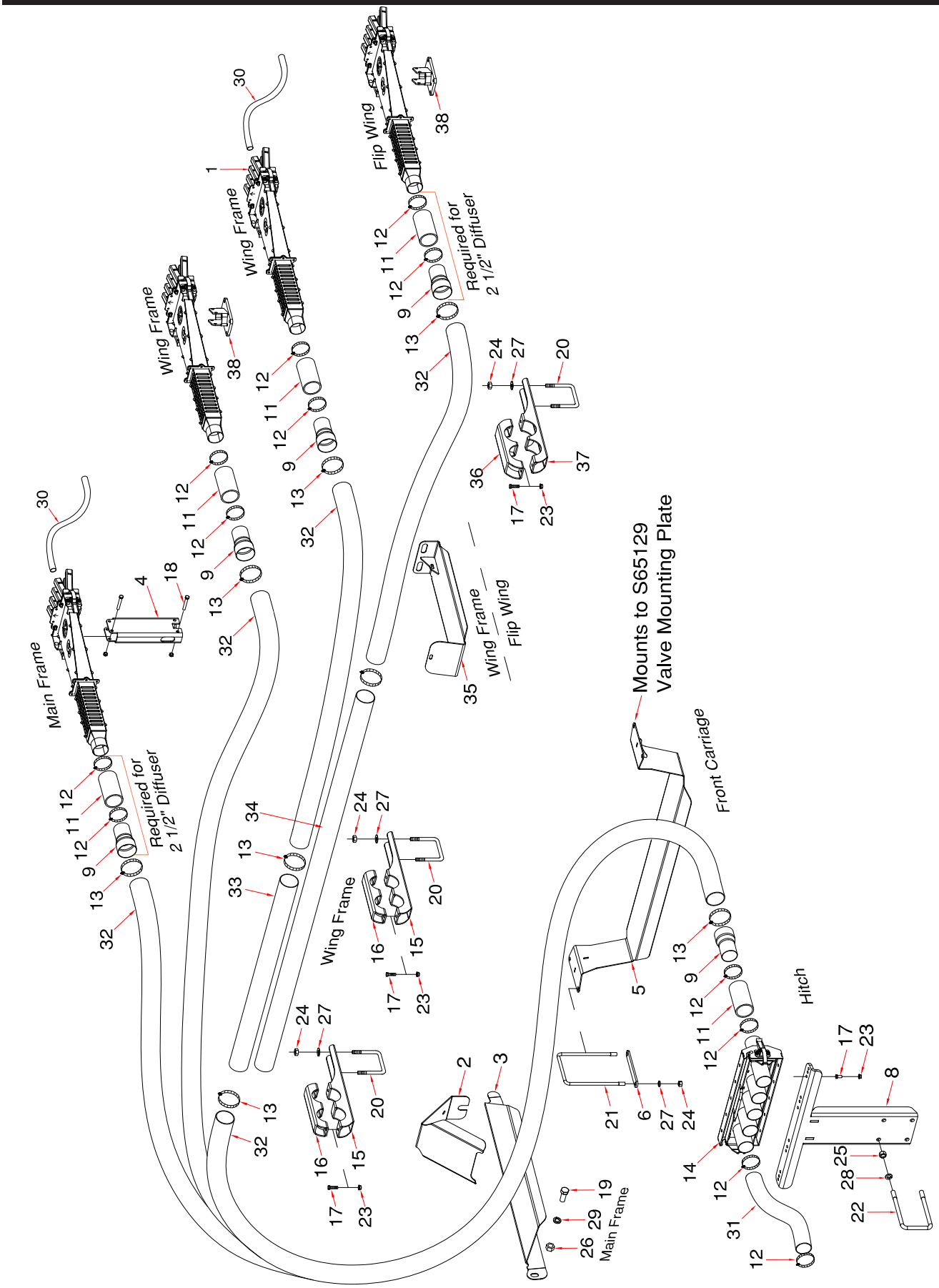

Single Shoot Tow Between - 50 ft - 15m - 7 primaries

Item	Part No.	Description	Qty
		For 10 and 12 inch - 250mm and 300mm spacing	
1	* * * * *	Divider Head Assembly (Refer to Divider Head Assembly for details)	
		10" spacing uses:	
		N66508 - Divider Head Assembly - 8 Outlet	3
		N66509 - Divider Head Assembly - 9 Outlet	4
		12" spacing uses:	
		N66507 - Divider Head Assembly - 7 Outlet	6
		N66508 - Divider Head Assembly - 8 Outlet	1
2	S67250	Primary Hose Deflector	2
3	S66430	Primary Hose Hose Suport - Main - Left side (shown)	1
	S66435	Primary Hose Hose Suport - Main - Right side	1
4	S65390	Divider Head Pedestal - Main Frame	1
5	N67245	Primary Hose Hose Suport - Between	1
6	N67274	Spacer Plate	1
7	N67275	Kit - Primary Hose Hose Suport - Between (Includes items 5, 6, 21, 24 and 27)	
8	N51962	Coupler Tower - Between	1
9	N64095	Primary Hose Adapter	14
10	* * * * *		
11	N19428	Hose - 2.54 ID x 2.79 OD x 5 Lg	14
12	N11905	Hose Clamp - 2 1/2 - HC5-44 (Air Cart side uses 14)	42
13	N64099	Hose Clamp - 3 - SSTCH5-400	22
14	* * * * *	Quick Coupler - 5 Run (Refer to Quick Coupler Assembly for details)	2
15	N66339	Distribution Pipe Support Bracket - 2 pipe - Wing	4
16	N66359	Distribution Pipe Clamp - 2 pipe - Wing	4
17	W-187	Hex Bolt - 3/8 x 1 1/4 Lg	16
18	W-480	Hex Bolt - 3/8 x 2 1/2 Lg (Refer to Divider Head Assembly for details)	2
19	BW-10	Hex Bolt - 3/4 x 1 3/4 Lg	2
20	C-3932	U-Bolt - 1/2 x 4 x 7 1/4 UL	6
21	H25628	U-Bolt - 1/2 x 6 1/16 x 9 3/8 UL	1
22	S39649	U-Bolt - 5/8 x 4 x 7 3/4 UL	2
23	S27987	Locknut - 3/8 Center Lock	16
24	W-516	Nut - 1/2	14
25	W-517	Nut - 5/8	4
26	W-518	Nut - 3/4	2
27	W-525	Lockwasher - 1/2	14
28	W-526	Lockwasher - 5/8	4
29	W-527	Lockwasher - 3/4	2
30	R480034	Hose - .929 ID x 1.169 OD/ft (75 ft roll) 10"SP-675 ft . . 12"SP-600 ft . . Prior to 2023	
	N73085	Hose - 1 ID x 1.250 OD (100 ft roll) - 2023 to 2025	
	N75771	**Hose - 1 ID x 1.250 OD (100 ft roll) - BLACK (Seed) - 2026 to Present**	
31	N69294	Hose - 2 1/2 ID x 100 ft roll - **Black** (Air Cart side of couplers)	100
32	N75812	Hose - 3 ID x 100 ft roll - **Black** - (**Seed**)	150
33	N66396	Primary Pipe SS - 3 x 48 Lg	2
34	N64094	Primary Pipe SS - 3 x 96 Lg	2
35	N67295	Primary Hose Guide Plate - Wing	2
36	N66374	Distribution Hose Clamp - Wing - 3 5/8 Dia	2
37	N66375	Distribution Hose Support Bracket - Wing - 3 5/8 Dia	2
38	N67202	Head Mounting Bracket - 30 Degree - Right (shown)	2
38A	N67200	Head Mounting Bracket - 30 Degree - Left	2

Single Shoot - Tow Between
60 ft - 18m - 8 primaries - 10, 12 and 15 inch (250 - 300 - 380mm) Spacing

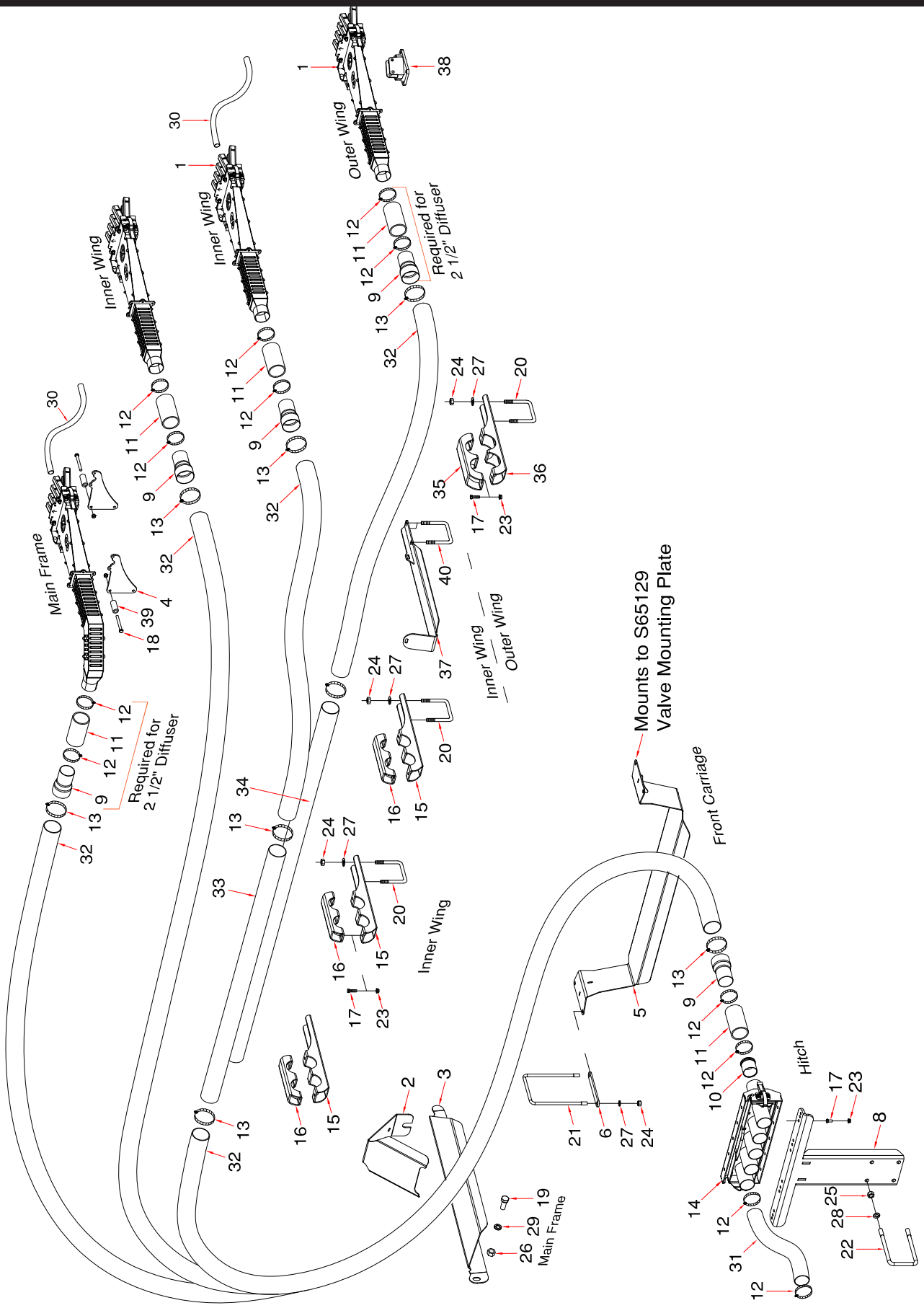

Single Shoot Tow Between - 60 ft - 18m - 8 primaries

Item	Part No.	Description	Qty
		For 10, 12 and 15 inch - 250mm, 300mm and 380mm spacing	
1	* * * * *	Divider Head Assembly (Refer to Divider Head Assembly for details)	
		10" spacing:	
		N66509 - Divider Head Assembly - 9 Outlet	8
		12" spacing uses:	
		N66507 - Divider Head Assembly - 7 Outlet	4
		N66508 - Divider Head Assembly - 8 Outlet	4
		15" spacing uses:	
		N66506 - Divider Head Assembly - 6 Outlet	8
2	S67250	Primary Hose Deflector	2
3	S66430	Primary Hose Hose Suport - Main - Left side (shown)	1
	S66435	Primary Hose Hose Suport - Main - Right side	1
4	S65382	Head Mounting Plate - Main	4
5	N67245	Primary Hose Hose Suport - Between	1
6	N67274	Spacer Plate	1
7	N67275	Kit - Primary Hose Hose Suport - Between (Includes items 5, 6, 21, 24 and 27)	
8	N51962	Coupler Tower - Between	1
9	N64095	Primary Hose Adapter	16
10	N37920	Equalizer	0
11	N19428	Hose - 2.54 ID x 2.79 OD x 5 Lg	16
12	N11905	Hose Clamp - 2 1/2 - HC5-44 (Air Cart side uses 16)	48
13	N64099	Hose Clamp - 3 - SSTCH5-400	24
14	* * * * *	Quick Coupler - 5 Run (Refer to Quick Coupler Assembly for details)	2
15	N66339	Distribution Pipe Support Bracket - 2 pipe - Wing - Wing	6
16	N66359	Distribution Pipe Clamp - 2 pipe - Wing - Wing	6
17	W-187	Hex Bolt - 3/8 x 1 1/4 Lg	20
18	S-1299	Hex Bolt - 3/8 x 4 1/2 Lg (Refer to Divider Head Assembly for details)	8
19	BW-10	Hex Bolt - 3/4 x 1 3/4 Lg	2
20	C-3932	U-Bolt - 1/2 x 4 x 7 1/4 UL	8
21	H25628	U-Bolt - 1/2 x 6 1/16 x 9 3/8 UL	1
22	S39649	U-Bolt - 5/8 x 4 x 7 3/4 UL	2
23	S27987	Locknut - 3/8 Center Lock	20
24	W-516	Nut - 1/2	18
25	W-517	Nut - 5/8	4
26	W-518	Nut - 3/4	2
27	W-525	Lockwasher - 1/2	18
28	W-526	Lockwasher - 5/8	4
29	W-527	Lockwasher - 3/4	2
30	R480034	Hose - .929 ID x 1.169 OD/ft (75 ft roll) 10"SP-825 ft . . 12"SP-675 ft . . 15"SP-600 ft	
	N73085	Hose - 1 ID x 1.250 OD (100 ft roll) - 2023 to 2025	
	N75771	**Hose - 1 ID x 1.250 OD (100 ft roll) - BLACK (Seed) - 2026 to Present**	
31	N69294	Hose - 2 1/2 ID x 100 ft roll - **Black** (Air Cart side of couplers)	125
32	N75812	Hose - 3 ID x 100 ft roll - **Black** - (**Seed**)	175
33	N64092	Primary Pipe SS - 3 x 72 Lg	2
34	N64094	Primary Pipe SS - 3 x 96 Lg	2
35	N66374	Distribution Hose Clamp - Wing - 3 5/8 Dia	2
36	N66375	Distribution Hose Support Bracket - Wing - 3 5/8 Dia	2
37	N66395	Primary Hose Guide Plate - Wing	2
38	N67200	Head Mounting Bracket - 30 Degree - Left (shown)	1
38A	N67202	Head Mounting Bracket - 30 Degree - Right	1
39	N50842	Bushings - .385 ID x 5/8 OD x 3 1/4 Lg	8
40	N19723	U-Bolt - 3/8 x 4 1/16 x 6 15/16 UL	8

Single Shoot - Tow Between
70 ft - 21m - 8 primaries - 10, 12 and 15 inch (250 - 300 - 380mm) Spacing

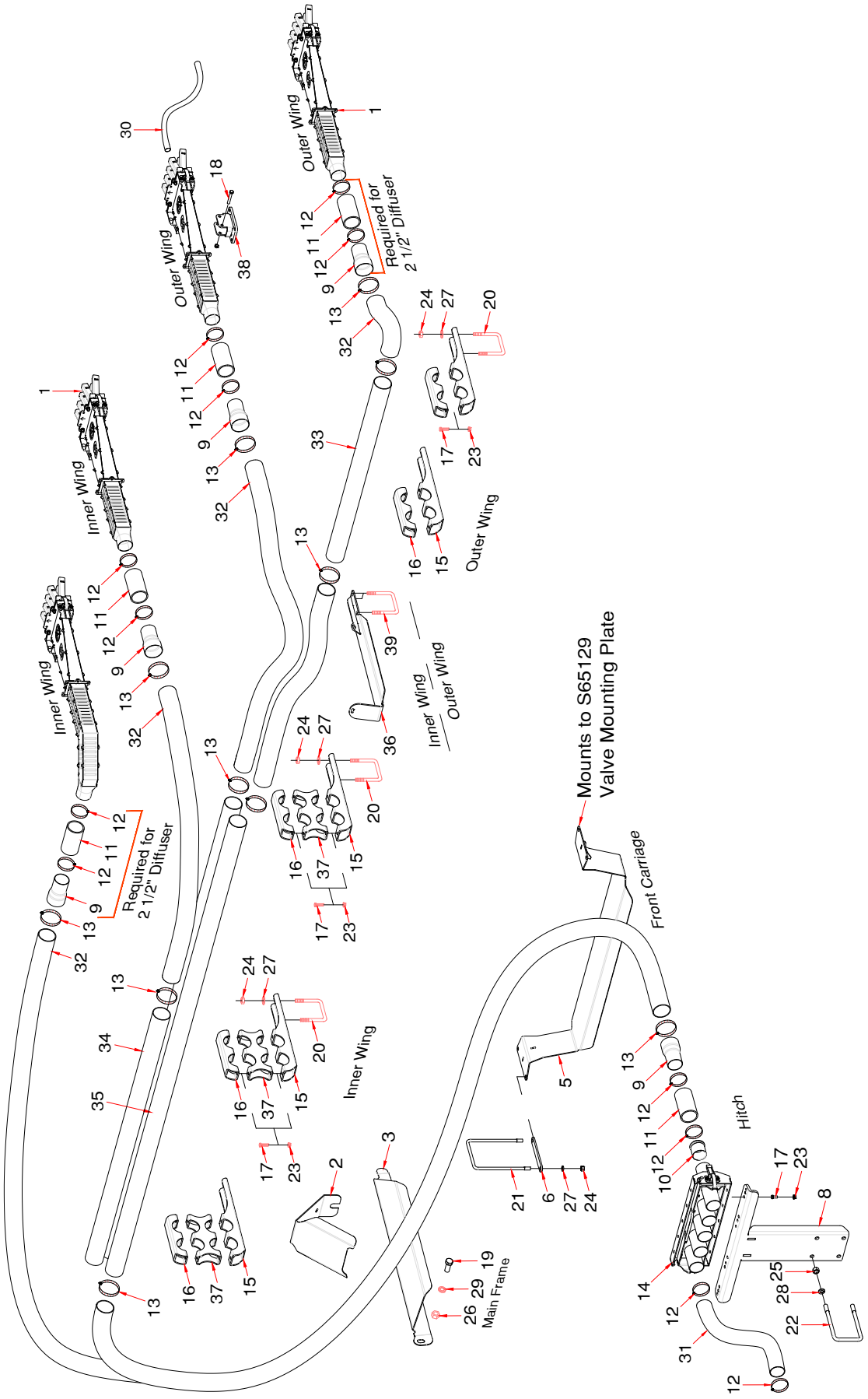

Single Shoot Tow Between - 70 ft - 21m - 8 primaries			
Item	**Part No.**	**Description**	**Qty**
		For 10, 12 and 15 inch - 250mm, 300mm and 380mm spacing	
1	* * * * *	Divider Head Assembly (Refer to Divider Head Assembly for details)	
1	* * * * *	Divider Head Assembly (Refer to Divider Head Assembly for details)	
		10" spacing uses:	
		N66510 - Divider Head Assembly - 10 Outlet	4
		* * * * * - Divider Head Assembly - 11 Outlet	4
		12" spacing uses:	
		N66508 - Divider Head Assembly - 8 Outlet	2
		N66509 - Divider Head Assembly - 9 Outlet	6
		15" spacing uses:	
		N66507 - Divider Head Assembly - 7 Outlet	8
2	S67250	Primary Hose Deflector	2
3	S66430	Primary Hose Hose Suport - Main - Left side (shown)	1
	S66435	Primary Hose Hose Suport - Main - Right side	1
4	* * * * *		
5	N67245	Primary Hose Hose Suport - Between	1
6	N67274	Spacer Plate	1
7	N67275	Kit - Primary Hose Hose Suport - Between (Includes items 5, 6, 21, 24 and 27)	
8	N51962	Coupler Tower - Between	1
9	N64095	Primary Hose Adapter	16
10	N37920	Equalizer	0
11	N19428	Hose - 2.54 ID x 2.79 OD x 5 Lg	16
12	N11905	Hose Clamp - 2 1/2 - HC5-44 (Air Cart side uses 18)	50
13	N64099	Hose Clamp - 3 - SSTCH5-400	32
14	* * * * *	Quick Coupler - 5 Run (Refer to Quick Coupler Assembly for details)	2
15	N66339	Distribution Pipe Support Bracket - Wing	10
16	N66359	Distribution Pipe Clamp - Wing	10
17	W-187	Hex Bolt - 3/8 x 1 1/4 Lg	36
18	W-480	Hex Bolt - 3/8 x 2 1/2 Lg (Refer to Divider Head Assembly for details)	2
19	BW-10	Hex Bolt - 3/4 x 1 3/4 Lg	2
20	C-3932	U-Bolt - 1/2 x 4 x 7 1/4 UL	10
21	H25628	U-Bolt - 1/2 x 6 1/16 x 9 3/8 UL	1
22	S39649	U-Bolt - 5/8 x 4 x 7 3/4 UL	2
23	S27987	Locknut - 3/8 Center Lock	36
24	W-516	Hex Nut - 1/2	22
25	W-517	Hex Nut - 5/8	4
26	W-518	Hex Nut - 3/4	2
27	W-525	Lockwasher - 1/2	22
28	W-526	Lockwasher - 5/8	4
29	W-527	Lockwasher - 3/4	2
30	R480034	Hose - .929 ID x 1.169 OD/ft (75 ft roll) 10"SP-975 ft . . 12"SP-825 ft . . 15"SP-675 ft	
	N73085	Hose - 1 ID x 1.250 OD (100 ft roll) - 2023 to 2025	
	N75771	**Hose - 1 ID x 1.250 OD (100 ft roll) - BLACK (Seed) - 2026 to Present**	
31	N69294	Hose - 2 1/2 ID x 100 ft roll - **Black** (Air Cart side of couplers)	125
32	N75812	Hose - 3 ID x 100 ft roll - **Black** - (**Seed**)	200
33	N66396	Primary Pipe SS - 3 x 48 Lg	2
34	N64092	Primary Pipe SS - 3 x 72 Lg	2
35	N64096	Primary Pipe SS - 3 x 120 Lg	4
36	N66395	Primary Hose Guide Plate	2
37	N66358	Distribution Pipe Spacer - 2 pipe - Wing	6
38	N67640	Head Mounting Bracket - Straight	2
39	N19723	U-Bolt - 3/8 x 4 1/16 x 6 15/16 UL	8

Single Shoot - Tow Between
70 ft - 21m - 9 primaries - 10, 12 and 15 inch (250 - 300 - 380mm) Spacing

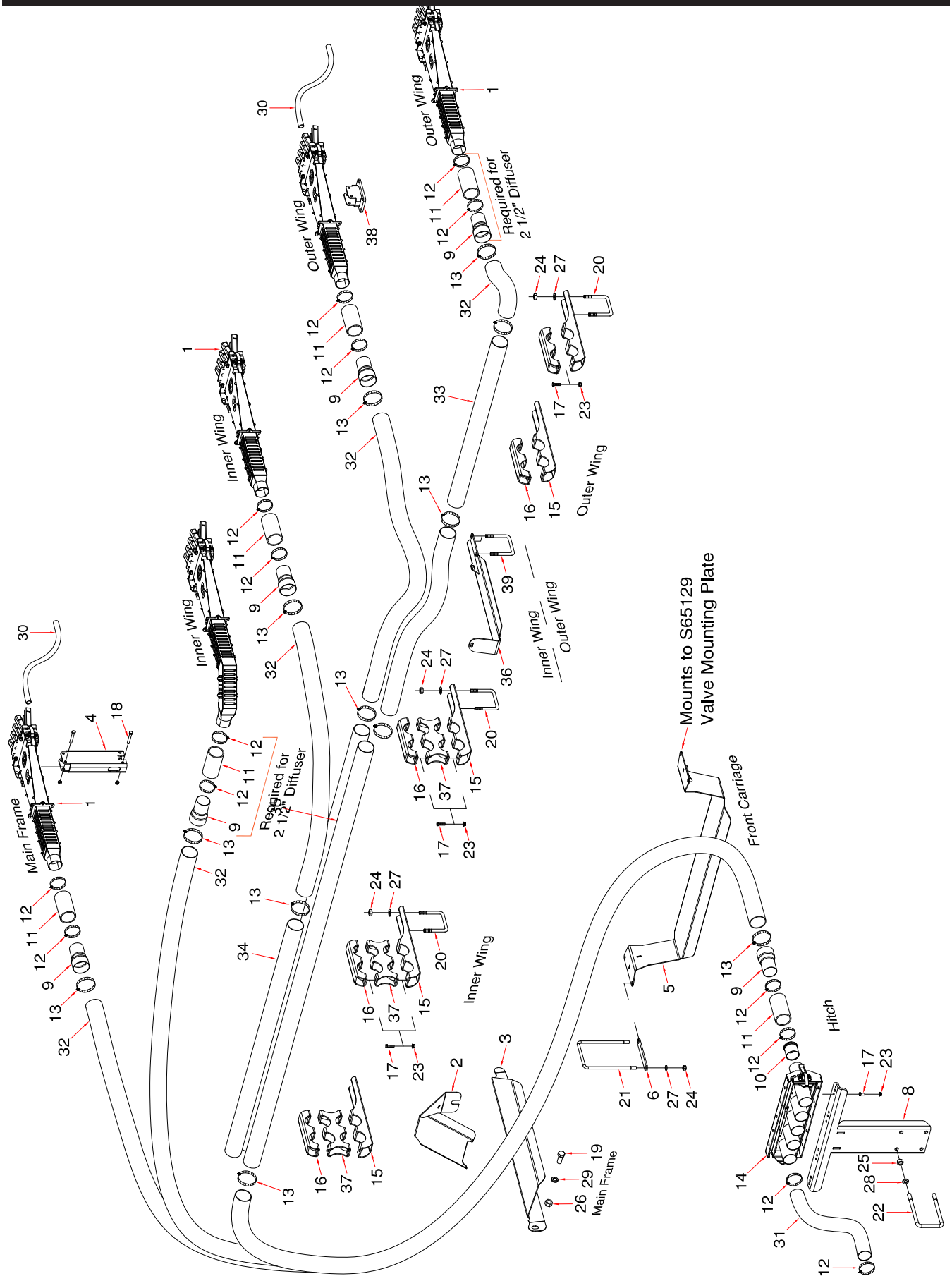

Single Shoot Tow Between - 70 ft - 21m - 9 primaries

Item	Part No.	Description	Qty
		For 10, 12 and 15 inch - 250mm, 300mm and 380mm spacing	
1	* * * * *	Divider Head Assembly (Refer to Divider Head Assembly for details)	
		10" spacing uses:	
		N66509 - Divider Head Assembly - 9 Outlet	6
		N66510 - Divider Head Assembly - 10 Outlet	3
		12" spacing uses:	
		N66507 - Divider Head Assembly - 7 Outlet	2
		N66508 - Divider Head Assembly - 8 Outlet	7
		15" spacing uses:	
		N66506 - Divider Head Assembly - 6 Outlet	7
		N66507 - Divider Head Assembly - 7 Outlet	2
2	S67250	Primary Hose Deflector	2
3	S66430	Primary Hose Hose Suport - Main - Left side (shown)	1
	S66435	Primary Hose Hose Suport - Main - Right side	1
4	S65390	Divider Head Pedestal - Main Frame	1
5	N67245	Primary Hose Hose Suport - Between	1
6	N67274	Spacer Plate	1
7	N67275	Kit - Primary Hose Hose Suport - Between (Includes items 5, 6, 21, 24 and 27)	
8	N51962	Coupler Tower - Between	1
9	N64095	Primary Hose Adapter	18
10	N37920	Equalizer	0
11	N19428	Hose - 2.54 ID x 2.79 OD x 5 Lg	18
12	N11905	Hose Clamp - 2 1/2 - HC5-44 (Air Cart side uses 18)	54
13	N64099	Hose Clamp - 3 - SSTCH5-400 (Range 3 1/8 - 3 3/4)	34
14	* * * * *	Quick Coupler - 5 Run (Refer to Quick Coupler Assembly for details)	2
15	N66339	Distribution Pipe Support Bracket - Wing	10
16	N66359	Distribution Pipe Clamp - Wing	10
17	W-187	Hex Bolt - 3/8 x 1 1/4 Lg	36
18	W-480	Hex Bolt - 3/8 x 2 1/2 Lg (Refer to Divider Head Assembly for details)	2
19	BW-10	Hex Bolt - 3/4 x 1 3/4 Lg	2
20	C-3932	U-Bolt - 1/2 x 4 x 7 1/4 UL	10
21	H25628	U-Bolt - 1/2 x 6 1/16 x 9 3/8 UL	1
22	S39649	U-Bolt - 5/8 x 4 x 7 3/4 UL	2
23	S27987	Locknut - 3/8 Center Lock	36
24	W-516	Hex Nut - 1/2	22
25	W-517	Hex Nut - 5/8	4
26	W-518	Hex Nut - 3/4	2
27	W-525	Lockwasher - 1/2	22
28	W-526	Lockwasher - 5/8	4
29	W-527	Lockwasher - 3/4	2
30	R480034	Hose - .929 ID x 1.169 OD/ft (75 ft roll) 10"SP-975 ft . . 12"SP-825 ft . . 15"SP-675 ft	
	N73085	Hose - 1 ID x 1.250 OD (100 ft roll) - 2023 to 2025	
	N75771	**Hose - 1 ID x 1.250 OD (100 ft roll) - BLACK (Seed) - 2026 to Present**	
31	N69294	Hose - 2 1/2 ID x 100 ft roll - **Black** (Air Cart side of couplers)	125
32	N75812	Hose - 3 ID x 100 ft roll - **Black** - (**Seed**)	200
33	N66396	Primary Pipe SS - 3 x 48 Lg	2
34	N64092	Primary Pipe SS - 3 x 72 Lg	2
35	N64096	Primary Pipe SS - 3 x 120 Lg	4
36	N66395	Primary Hose Guide Plate	2
37	N66358	Distribution Pipe Spacer - 2 pipe - Wing	6
38	N67640	Head Mounting Bracket - Straight	2
39	N19723	U-Bolt - 3/8 x 4 1/16 x 6 15/16 UL	8

Single Shoot - Tow Between
80 ft - 24m - 10 primaries - 10 and 12 inch (250 - 300) Spacing

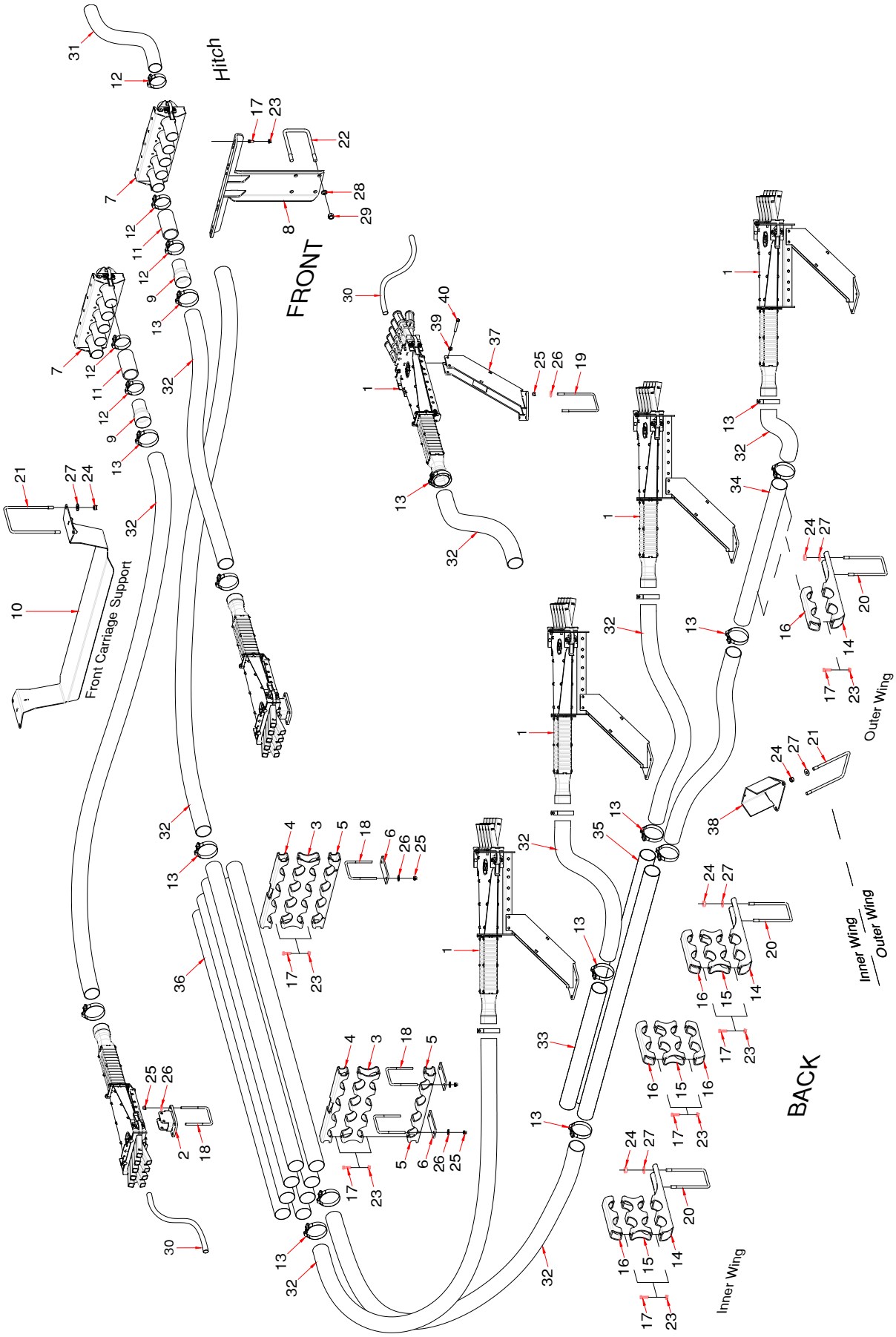

Single Shoot - Tow Between - 80 ft - 24m - 10 primaries

Item	Part No.	Description	Qty
		For 10 and 12 inch - 250mm and 300mm spacing	
1	* * * * *	Divider Head Assembly (Refer to Divider Head Assembly for details)	
	80ft	**10" spacing uses: 97 runs**	
		N66509 - Divider Head Assembly - 9 Outlet	3
		N66510 - Divider Head Assembly - 10 Outlet	7
	80ft	**12" spacing uses: 82 runs**	
		N66508 - Divider Head Assembly - 8 Outlet	8
		N66509 - Divider Head Assembly - 9 Outlet	2
2	N67640	Head Mounting Bracket - Straight	2
3	N66322	Distribution Pipe Spacer - Main	2
4	N66321	Distribution Pipe Clamp - Main	2
5	N72833	Distribution Pipe Clamp - Front Carriage	2
6	N72834	Clamp Plat - Main	4
7	* * * * *	Quick Coupler - 5 Run (Refer to Quick Coupler Assembly for details)	2
8	N51962	Coupler Tower - Between	1
9	N64095	Primary Hose Adapter	10
10	N67245	Primary Hose Hose Suport - Between	1
11	N19428	Hose - 2.54 ID x 2.79 OD x 5 Lg	10
12	N73068	Hose Clamp -T-Bolt - 2 9/16 - 2 7/8	40
13	N64099	Hose Clamp - 3 - SSTCH5-400 (Range 3 1/8 - 3 3/4)	48
14	N66339	Distribution Pipe Support Bracket - Wing	8
15	N66358	Distribution Pipe Spacer - 2 pipe - Wing	8
16	N66359	Distribution Pipe Clamp - Wing	12
17	W-187	Hex Bolt - 3/8 x 1 1/4 Lg	44
18	N15098	U-Bolt - 3/8 x 4 x 5 UL	8
19	N19723	U-Bolt - 3/8 x 4 1/16 x 6 15/16 UL	16
20	C-3932	U-Bolt - 1/2 x 4 x 7 1/4 UL	8
21	H21437	U-Bolt - 1/2 x 6 x 9 UL	2
22	S39649	U-Bolt - 5/8 x 4 x 7 3/4 UL	2
23	S27987	Locknut - 3/8 Center Lock	44
24	S47110	Lock Nut - 1/2 Center Lock	20
25	10229	Locknut - 3/8 Nylock	48
26	W-538	Flat Washer - 7/16	48
27	S-766	Flat Washer - 1/2	20
28	W-526	Lockwasher - 5/8	8
29	W-517	Nut - 5/8	8
30	N73085	Hose - 1 ID x 1.250 OD (100 ft roll) - 2023 to 2025	12
	N75771	**Hose - 1 ID x 1.250 OD (100 ft roll) - BLACK (Seed) - 2026 to Present**	
31	N69294	Hose - 2 1/2 ID x 100 ft roll - **Black** (Air Cart side of couplers)	150ft
32	N75812	Hose - 3 ID x 100 ft roll - **Black**	200ft
33	S72398	Primary Pipe SS - 3 x 36 Lg	2
34	N66396	Primary Pipe SS - 3 x 48 Lg	2
35	N64092	Primary Pipe SS - 3 x 72 Lg	4
36	N64094	Primary Pipe SS - 3 x 96 Lg	2
37	S72391	Mount Bracket	8
38	S72979	Hose Guard	2
39	M-3388	Locknut - 3/8 Unitorque	20
40	W-480	Hex Bolt - 3/8 x 2 1/2 Lg	20

Dual Shoot - Stacked Heads - Tow Behind - Prior to 2023
40 ft - 12m - 5 primaries - 12 and 15 inch (300 - 380mm) Spacing

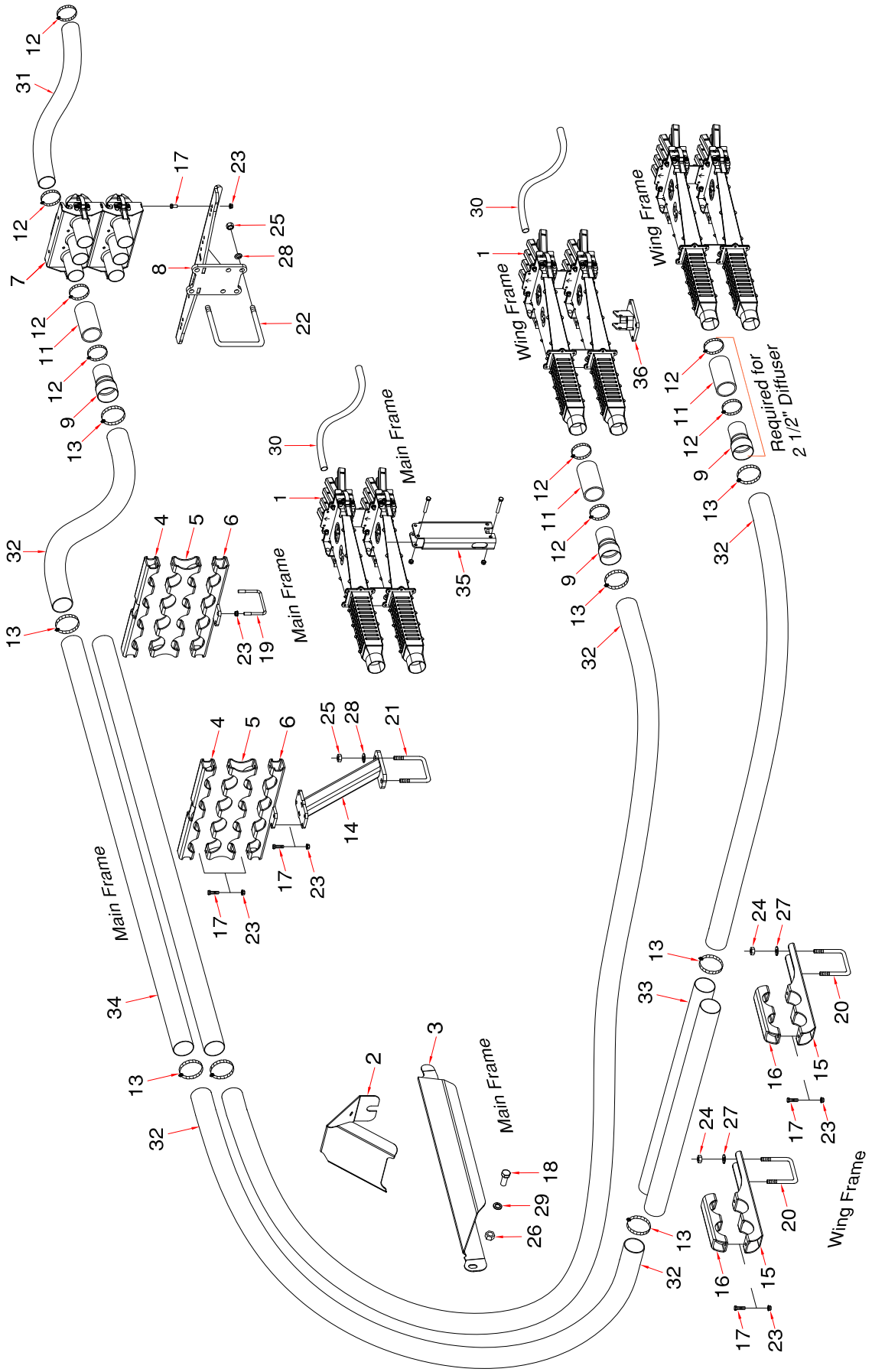

Dual Shoot Stacked Heads Tow Behind - 40 ft - 12m - 5 primaries - Prior to 2023

Item	Part No.	Description	Qty
		For 12 and 15 inch - 300mm and 380mm spacing	
1	* * * * *	Divider Head Assembly (Refer to Divider Head Assembly for details)	
		12" spacing uses:	
		N66508 - Divider Head Assembly - 8 Outlet	10
		15" spacing uses:	
		N66506 - Divider Head Assembly - 6 Outlet	6
		N66507 - Divider Head Assembly - 7 Outlet	4
2	S67250	Primary Hose Deflector	2
3	S66430	Primary Hose Hose Suport - Main - Left side (shown)	1
	S66435	Primary Hose Hose Suport - Main - Right side	1
4	N66321	Distribution Pipe Clamp - Main	4
5	N66322	Distribution Pipe Spacer - Main	4
6	N66335	Distribution Pipe Clamp Bracket - Main	4
7	* * * * *	Quick Coupler - 3 Run (Refer to Quick Coupler Assembly for details)	4
8	N53203	Coupler Tower - Behind	1
9	N64095	Primary Hose Adapter	20
10	* * * * *		
11	N19428	Hose - 2.54 ID x 2.79 OD x 5 Lg	20
12	N11905	Hose Clamp - 2 1/2 - HC5-44 (Air Cart side uses 20)	60
13	N64099	Hose Clamp - 3 - SSTCH5-400 (Range 3 1/8 - 3 3/4)	44
14	N66325	Distribution Pipe Stand - Main	2
15	N66339	Distribution Pipe Support Bracket - 2 pipe - Wing	4
16	N66359	Distribution Pipe Clamp - 2 pipe - Wing	4
17	W-187	Hex Bolt - 3/8 x 1 1/4 Lg	40
18	BW-10	Hex Bolt - 3/4 x 1 3/4 Lg	2
19	D-4932	U-Bolt - 3/8 x 4 1/8 x 3 UL	4
20	C-3932	U-Bolt - 1/2 x 4 x 7 1/4 UL	4
21	S39649	U-Bolt - 5/8 x 4 x 7 3/4 UL	2
22	F-4642	U-Bolt - 5/8 x 6 x 5 1/2 UL	2
23	S27987	Locknut - 3/8 Center Lock	48
24	W-516	Nut - 1/2	8
25	W-517	Nut - 5/8	8
26	W-518	Nut - 3/4	2
27	W-525	Lockwasher - 1/2	8
28	W-526	Lockwasher - 5/8	8
29	W-527	Lockwasher - 3/4	2
30	R480034	Hose - .929 ID x 1.169 OD/ft (75 ft roll) . . .12"SP-900 ft . . .15"SP-750 ft	
31	R480055	Hose - 2 1/2 ID/ft Goodyear (100 ft rolls) (Air Cart side of couplers)	200
32	R480060	Hose - 3 ID/ft (100 ft rolls)	175
33	N66396	Primary Pipe SS - 3 x 48 Lg	4
34	N64094	Primary Pipe SS - 3 x 96 Lg	8
35	S65390	Divider Head Pedestal - Main Frame	1
36	N67202	Head Mounting Bracket - 30 Degree - Right (shown)	1
36A	N67200	Head Mounting Bracket - 30 Degree - Left	1

Dual Shoot - Stacked Heads - Tow Behind - Prior to 2023
40 ft - 12m - 6 primaries - 10 inch (250mm) Spacing

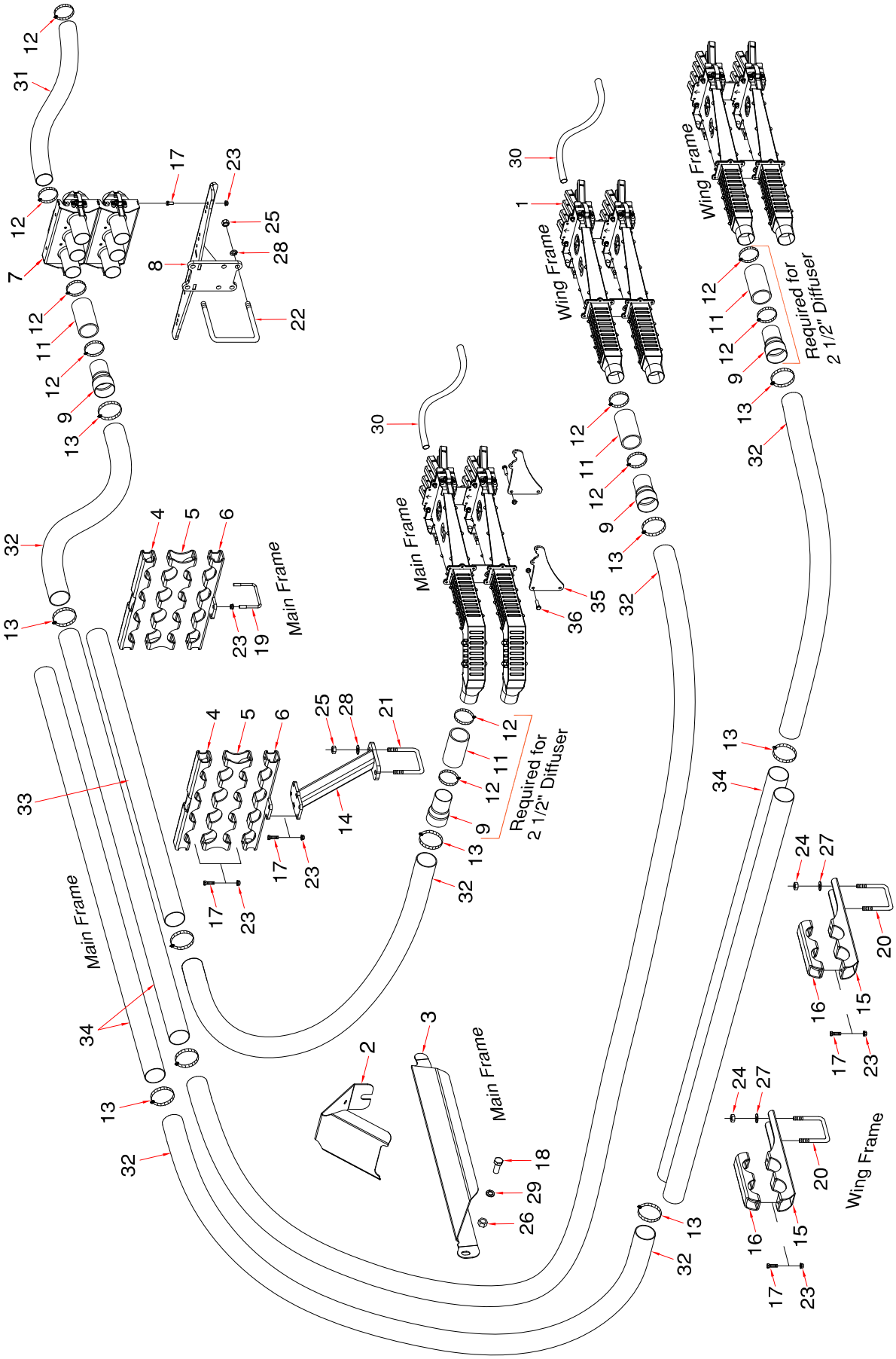

Dual Shoot Stacked Heads Tow Behind - 40 ft -12m - 6 primaries - Prior to 2023			
Item	**Part No.**	**Description**	**Qty**
		For 10 inch - 250mm spacing	
1	* * * * *	Divider Head Assembly (Refer to Divider Head Assembly for details) **10" spacing uses:** N66508 - Divider Head Assembly - 8 Outlet	12
2	S67250	Primary Hose Deflector	2
3	S66430	Primary Hose Hose Suport - Main - Left side (shown)	1
	S66435	Primary Hose Hose Suport - Main - Right side	1
4	N66321	Distribution Pipe Clamp - Main	4
5	N66322	Distribution Pipe Spacer - Main	4
6	N66335	Distribution Pipe Clamp Bracket - Main	4
7	* * * * *	Quick Coupler - 3 Run (Refer to Quick Coupler Assembly for details)	4
8	N53203	Coupler Tower - Behind	1
9	N64095	Primary Hose Adapter	24
10	* * * * *		
11	N19428	Hose - 2.54 ID x 2.79 OD x 5 Lg	24
12	N11905	Hose Clamp - 2 1/2 - HC5-44 (Air Cart side uses 24)	72
13	N64099	Hose Clamp - 3 - SSTCH5-400 (Range 3 1/8 - 3 3/4)	54
14	N66325	Distribution Pipe Stand - Main	2
15	N66339	Distribution Pipe Support Bracket - 2 pipe - Wing	4
16	N66359	Distribution Pipe Clamp - 2 pipe - Wing	4
17	W-187	Hex Bolt - 3/8 x 1 1/4 Lg.	40
18	BW-10	Hex Bolt - 3/4 x 1 3/4 Lg.	2
19	D-4932	U-Bolt - 3/8 x 4 1/8 x 3 UL	4
20	C-3932	U-Bolt - 1/2 x 4 x 7 1/4 UL	4
21	S39649	U-Bolt - 5/8 x 4 x 7 3/4 UL	2
22	F-4642	U-Bolt - 5/8 x 6 x 5 1/2 UL	2
23	S27987	Locknut - 3/8 Center Lock	48
24	W-516	Nut - 1/2	8
25	W-517	Nut - 5/8	8
26	W-518	Nut - 3/4	2
27	W-525	Lockwasher - 1/2	8
28	W-526	Lockwasher - 5/8	8
29	W-527	Lockwasher - 3/4	2
30	R480034	Hose - .929 ID x 1.169 OD/ft (75 ft roll)	1125
31	R480055	Hose - 2 1/2 ID/ft Goodyear (100 ft rolls) (Air Cart side of couplers)	250
32	R480060	Hose - 3 ID/ft (100 ft rolls)	175
33	N64092	Primary Pipe SS - 3 x 72 Lg	4
34	N64094	Primary Pipe SS - 3 x 96 Lg	12
35	S65382	Head Mounting Plate - Main	4
36	W-187	Hex Bolt - 3/8 x 1 1/4 Lg.	8

Dual Shoot - Stacked Heads - Tow Behind - Prior to 2023
50 ft - 15m - 6 primaries - 15 inch (380mm) Spacing

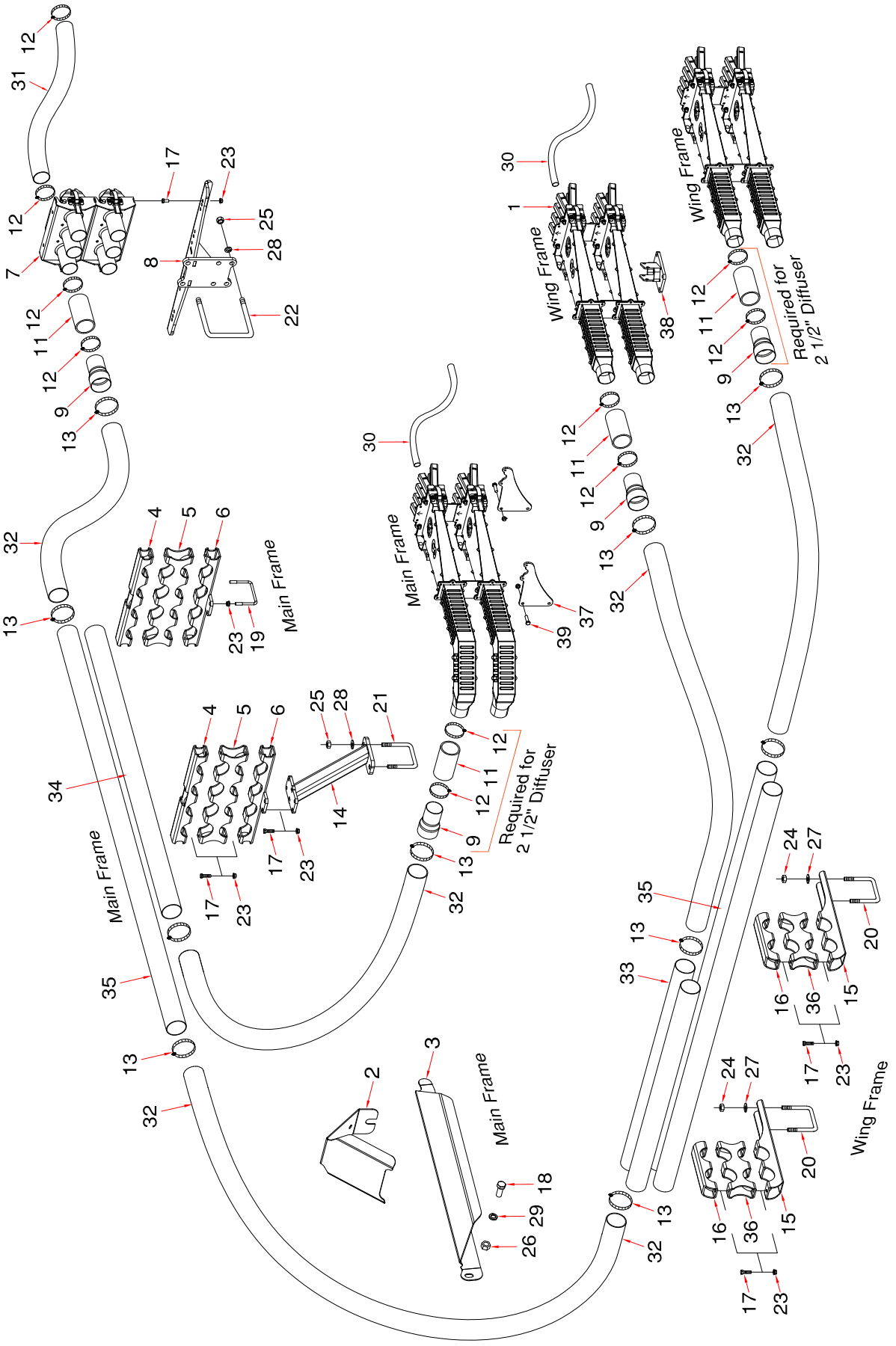

Dual Shoot Stacked Heads Tow Behind - 50 ft - 15m - 6 primaries - Prior to 2023

Item	Part No.	Description	Qty
		For 15 inch - 380mm spacing	
1	* * * * *	Divider Head Assembly (Refer to Divider Head Assembly for details)	
		15" spacing uses:	
		N66506 - Divider Head Assembly - 6 Outlet	4
		N66507 - Divider Head Assembly - 7 Outlet	8
2	S67250	Primary Hose Deflector	2
3	S66430	Primary Hose Hose Suport - Main - Left side (shown)	1
	S66435	Primary Hose Hose Suport - Main - Right side	1
4	N66321	Distribution Pipe Clamp - Main	4
5	N66322	Distribution Pipe Spacer - Main	4
6	N66335	Distribution Pipe Clamp Bracket - Main	4
7	* * * * *	Quick Coupler - 3 Run (Refer to Quick Coupler Assembly for details)	4
8	N53203	Coupler Tower - Behind	1
9	N64095	Primary Hose Adapter	24
10	* * * * *		
11	N19428	Hose - 2.54 ID x 2.79 OD x 5 Lg	24
12	N11905	Hose Clamp - 2 1/2 - HC5-44 (Air Cart side uses 24)	72
13	N64099	Hose Clamp - 3 - SSTCH5-400	64
14	N66325	Distribution Pipe Stand - Main	2
15	N66339	Distribution Pipe Support Bracket - 2 pipe - Wing	4
16	N66359	Distribution Pipe Clamp - 2 pipe - Wing	4
17	W-187	Hex Bolt - 3/8 x 1 1/4 Lg.	44
18	BW-10	Hex Bolt - 3/4 x 1 3/4 Lg.	2
19	D-4932	U-Bolt - 3/8 x 4 1/8 x 3 UL	4
20	C-3932	U-Bolt - 1/2 x 4 x 7 1/4 UL	4
21	S39649	U-Bolt - 5/8 x 4 x 7 3/4 UL	2
22	F-4642	U-Bolt - 5/8 x 6 x 5 1/2 UL	2
23	S27987	Locknut - 3/8 Center Lock	52
24	W-516	Nut - 1/2	8
25	W-517	Nut - 5/8	8
26	W-518	Nut - 3/4	2
27	W-525	Lockwasher - 1/2	8
28	W-526	Lockwasher - 5/8	8
29	W-527	Lockwasher - 3/4	2
30	R480034	Hose - .929 ID x 1.169 OD/ft (75 ft roll)	900
31	R480055	Hose - 2 1/2 ID/ft Goodyear (100 ft rolls) (Air Cart side of couplers)	250
32	R480060	Hose - 3 ID/ft (100 ft rolls)	300
33	N66396	Primary Pipe SS - 3 x 48 Lg	4
34	N64092	Primary Pipe SS - 3 x 72 Lg	4
35	N64094	Primary Pipe SS - 3 x 96 Lg	12
36	N66358	Distribution Pipe Spacer - 2 pipe - Wing	4
37	S65382	Head Mounting Plate - Main	4
38	N67202	Head Mounting Bracket - 30 Degree - Right (shown)	1
38A	N67200	Head Mounting Bracket - 30 Degree - Left	1
39	W-187	Hex Bolt - 3/8 x 1 1/4 Lg.	8

Dual Shoot - Stacked Heads - Tow Behind - Prior to 2023
50 ft - 15m - 7 primaries - 10 and 12 inch (250 - 300mm) Spacing

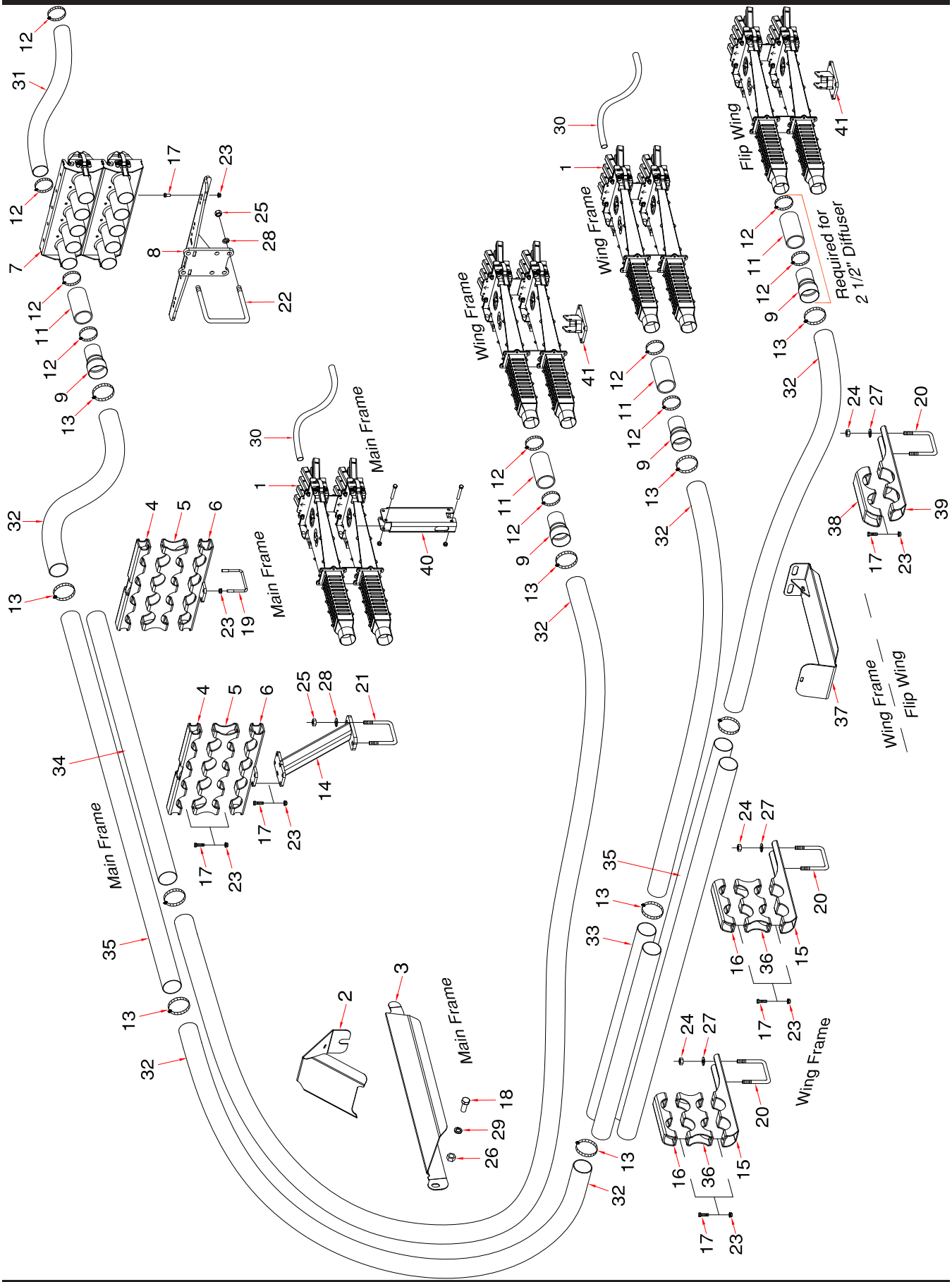

Dual Shoot Stacked Heads Tow Behind - 50 ft - 15m - 7 primaries - Prior to 2023

Item	Part No.	Description	Qty
		For 10 and 12 inch - 250mm and 300mm spacing	
1	* * * * *	Divider Head Assembly (Refer to Divider Head Assembly for details)	
		10" spacing uses:	
		N66508 - Divider Head Assembly - 8 Outlet	6
		N66509 - Divider Head Assembly - 9 Outlet	8
		12" spacing uses:	
		N66507 - Divider Head Assembly - 7 Outlet	12
		N66508 - Divider Head Assembly - 8 Outlet	2
2	S67250	Primary Hose Deflector	2
3	S66430	Primary Hose Hose Suport - Main - Left side (shown)	1
	S66435	Primary Hose Hose Suport - Main - Right side	1
4	N66321	Distribution Pipe Clamp - Main	4
5	N66322	Distribution Pipe Spacer - Main	4
6	N66335	Distribution Pipe Clamp Bracket - Main	4
7	* * * * *	Quick Coupler - 5 Run (Refer to Quick Coupler Assembly for details)	4
8	N53203	Coupler Tower - Behind	1
9	N64095	Primary Hose Adapter	28
10	* * * * *		
11	N19428	Hose - 2.54 ID x 2.79 OD x 5 Lg	28
12	N11905	Hose Clamp - 2 1/2 - HC5-44 **(Air Cart side uses 28)**	84
13	N64099	Hose Clamp - 3 - SSTCH5-400	68
14	N66325	Distribution Pipe Stand - Main	2
15	N66339	Distribution Pipe Support Bracket - 2 pipe - Wing	4
16	N66359	Distribution Pipe Clamp - 2 pipe - Wing	4
17	W-187	Hex Bolt - 3/8 x 1 1/4 Lg	48
18	BW-10	Hex Bolt - 3/4 x 1 3/4 Lg	2
19	D-4932	U-Bolt - 3/8 x 4 1/8 x 3 UL	4
20	C-3932	U-Bolt - 1/2 x 4 x 7 1/4 UL	12
21	S39649	U-Bolt - 5/8 x 4 x 7 3/4 UL	2
22	F-4642	U-Bolt - 5/8 x 6 x 5 1/2 UL	2
23	S27987	Locknut - 3/8 Center Lock	56
24	W-516	Nut - 1/2	24
25	W-517	Nut - 5/8	8
26	W-518	Nut - 3/4	2
27	W-525	Lockwasher - 1/2	24
28	W-526	Lockwasher - 5/8	8
29	W-527	Lockwasher - 3/4	2
30	R480034	Hose - .929 ID x 1.169 OD/ft (75 ft roll) . . . 10"SP-1350 ft . . . 12"SP-1125 ft	
31	R480055	Hose - 2 1/2 ID/ft Goodyear (100 ft rolls) (Air Cart side of couplers)	300
32	R480060	Hose - 3 ID/ft (100 ft rolls)	300
33	N66396	Primary Pipe SS - 3 x 48 Lg	4
34	N64092	Primary Pipe SS - 3 x 72 Lg	4
35	N64094	Primary Pipe SS - 3 x 96 Lg	12
36	N66358	Distribution Pipe Spacer - 2 pipe - Wing	4
37	N67295	Primary Hose Guide Plate - Wing	2
38	N66374	Distribution Hose Clamp - Wing - 3 5/8 Dia	2
39	N66375	Distribution Hose Support Bracket - Wing - 3 5/8 Dia	2
40	S65390	Divider Head Pedestal - Main Frame	1
41	N67202	Head Mounting Bracket - 30 Degree - Right (shown)	1
41A	N67200	Head Mounting Bracket - 30 Degree - Left	1

Dual Shoot - Stacked Heads - Tow Behind - Prior to 2023
60 ft - 18m - 8 primaries - 10, 12 and 15 inch (250 - 300 - 380mm) Spacing

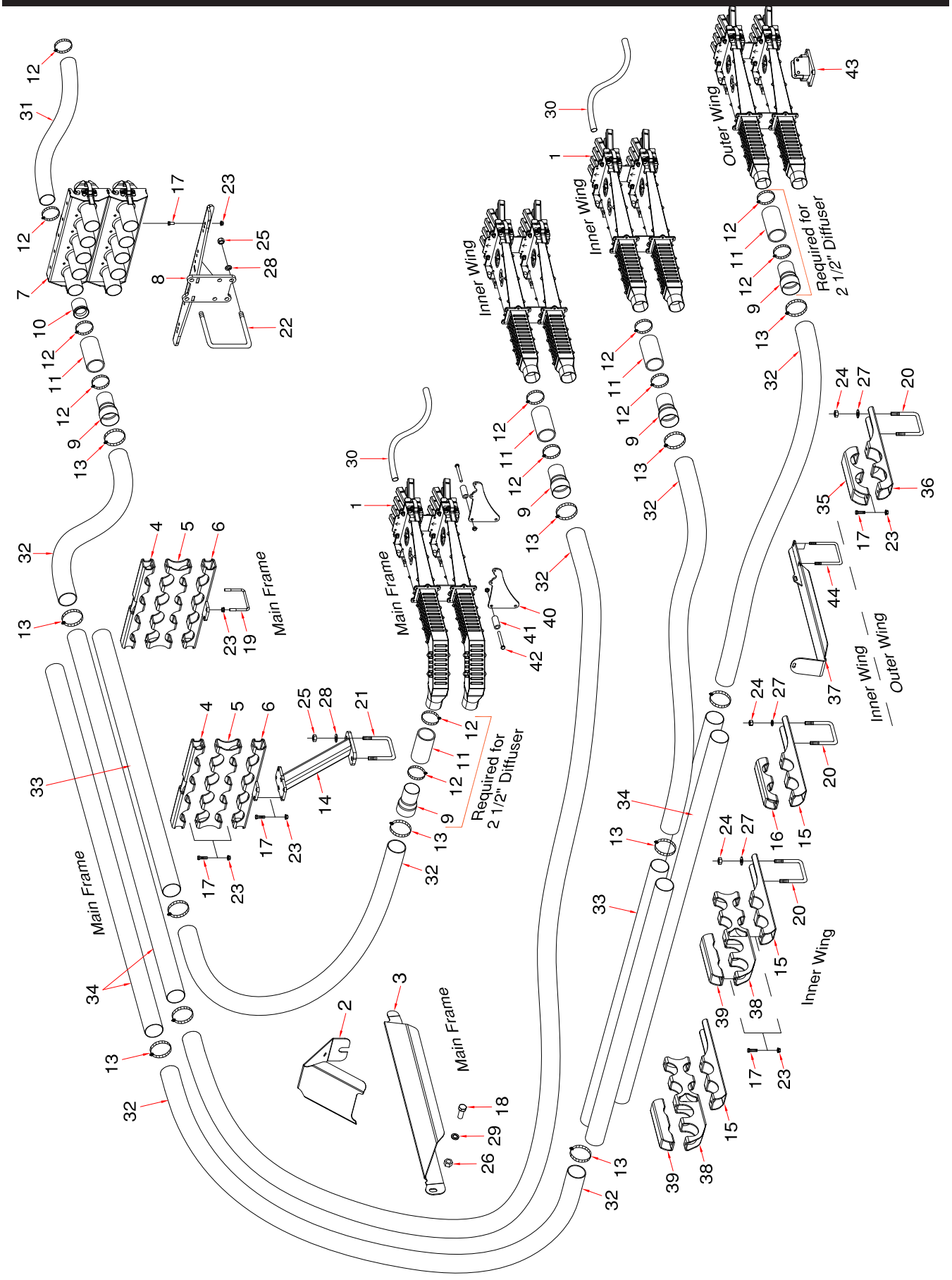

Dual Shoot Stacked Heads Tow Behind - 60 ft - 18m - 8 primaries - Prior to 2023

Item	Part No.	Description	Qty
		For 10, 12 and 15 inch - 250mm, 300mm and 380mm spacing	
1	* * * * *	Divider Head Assembly (Refer to Divider Head Assembly for details)	
		10" spacing uses:	
		N66509 - Divider Head Assembly - 9 Outlet	16
		12" spacing uses:	
		N66507 - Divider Head Assembly - 7 Outlet	8
		N66508 - Divider Head Assembly - 8 Outlet	8
		15" spacing uses 8 # 6 heads	
		N66506 - Divider Head Assembly - 6 Outlet	16
2	S67250	Primary Hose Deflector	2
3	S66430	Primary Hose Hose Suport - Main - Left side (shown)	1
	S66435	Primary Hose Hose Suport - Main - Right side	1
4	N66321	Distribution Pipe Clamp - Main	4
5	N66322	Distribution Pipe Spacer - Main	4
6	N66335	Distribution Pipe Clamp Bracket - Main	4
7	* * * * *	Quick Coupler - 5 Run (Refer to Quick Coupler Assembly for details)	4
8	N53203	Coupler Tower - Behind	1
9	N64095	Primary Hose Adapter	32
10	N37920	Equalizer	0
11	N19428	Hose - 2.54 ID x 2.79 OD x 5 Lg	32
12	N11905	Hose Clamp - 2 1/2 - HC5-44 (Air Cart side uses 32)	96
13	N64099	Hose Clamp - 3 - SSTCH5-400	80
14	N66325	Distribution Pipe Stand - Main	2
15	N66339	Distribution Pipe Support Bracket - 2 pipe - Wing - Wing	6
16	N66359	Distribution Pipe Clamp - 2 pipe - Wing - Wing	2
17	W-187	Hex Bolt - 3/8 x 1 1/4 Lg	52
18	BW-10	Hex Bolt - 3/4 x 1 3/4 Lg	2
19	D-4932	U-Bolt - 3/8 x 4 1/8 x 3 UL	4
20	C-3932	U-Bolt - 1/2 x 4 x 7 1/4 UL	8
21	S39649	U-Bolt - 5/8 x 4 x 7 3/4 UL	2
22	F-4642	U-Bolt - 5/8 x 6 x 5 1/2 UL	2
23	S27987	Locknut - 3/8 Center Lock	60
24	W-516	Nut - 1/2	16
25	W-517	Nut - 5/8	8
26	W-518	Nut - 3/4	2
27	W-525	Lockwasher - 1/2	16
28	W-526	Lockwasher - 5/8	8
29	W-527	Lockwasher - 3/4	2
30	R480034	Hose - .929 ID x 1.169 OD/ft (75 ft roll) 10"SP-1650 ft . . 12"SP-1350 ft . . 15"SP-1125 ft.	
31	R480055	Hose - 2 1/2 ID/ft Goodyear (100 ft rolls) (Air Cart side of couplers)	325
32	R480060	Hose - 3 ID/ft (100 ft rolls)	275
33	N64092	Primary Pipe SS - 3 x 72 Lg	8
34	N64094	Primary Pipe SS - 3 x 96 Lg	16
35	N66374	Distribution Hose Clamp - Wing - 3 5/8 Dia	2
36	N66375	Distribution Hose Support Bracket - Wing - 3 5/8 Dia	2
37	N66395	Primary Hose Guide Plate - Wing	2
38	N66775	Distribution Pipe Spacer - 6 pipe - Wing	4
39	N66855	Distribution Pipe Clamp - 2 pipe - Wing	4
40	S65382	Head Mounting Plate - Main	4
41	N50842	Bushings - .385 ID x 5/8 OD x 3 1/4 Lg	8
42	S-1299	Hex Bolt - 3/8 x 4 1/2 Lg	8
43	N67200	Head Mounting Bracket - 30 Degree - Left (shown)	1
43A	N67202	Head Mounting Bracket - 30 Degree - Right	1
44	N19723	U-Bolt - 3/8 x 4 1/16 x 6 15/16 UL	8

Dual Shoot - Stacked Heads - Tow Behind - Prior to 2023
70 ft - 21m - 9 primaries - 10, 12 and 15 inch (250 - 300 - 380mm) Spacing

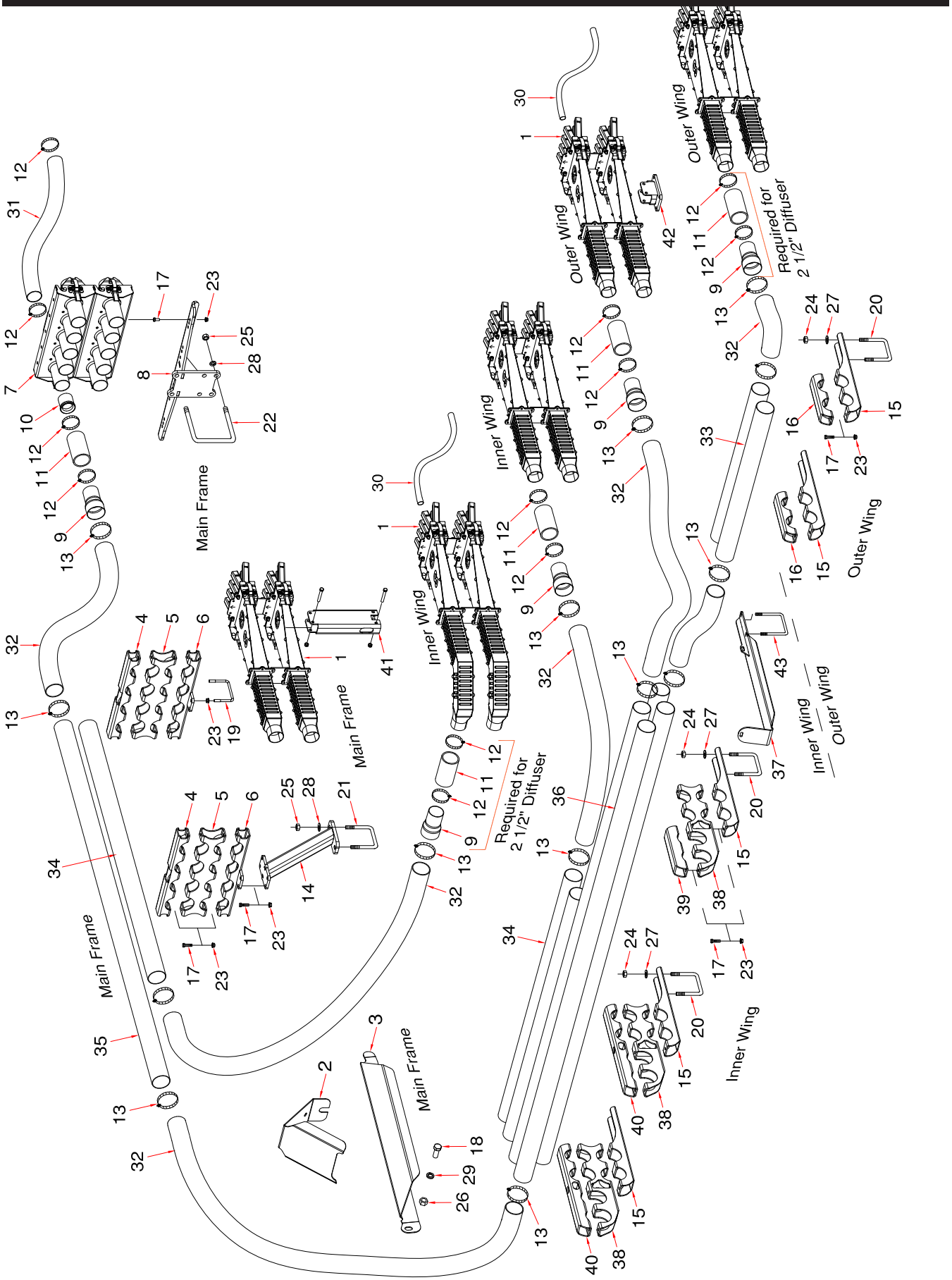

Dual Shoot Stacked Heads Tow Behind - 70 ft - 21m - 9 primaries - Prior to 2023

Item	Part No.	Description	Qty
		For 10, 12 and 15 inch - 250mm, 300mm and 380mm spacing	
1	* * * * *	Divider Head Assembly (Refer to Divider Head Assembly for details)	
		10" spacing uses:	
		N66509 - Divider Head Assembly - 9 Outlet	12
		N66510 - Divider Head Assembly - 10 Outlet	6
		12" spacing uses:	
		N66507 - Divider Head Assembly - 7 Outlet	4
		N66508 - Divider Head Assembly - 8 Outlet	14
		15" spacing uses:	
		N66506 - Divider Head Assembly - 6 Outlet	14
		N66507 - Divider Head Assembly - 7 Outlet	4
2	S67250	Primary Hose Deflector	2
3	S66430	Primary Hose Hose Suport - Main - Left side (shown)	1
	S66435	Primary Hose Hose Suport - Main - Right side	1
4	N66321	Distribution Pipe Clamp - Main	4
5	N66322	Distribution Pipe Spacer - Main	4
6	N66335	Distribution Pipe Clamp Bracket - Main	4
7	* * * * *	Quick Coupler - 5 Run (Refer to Quick Coupler Assembly for details)	4
8	N53203	Coupler Tower - Behind	1
9	N64095	Primary Hose Adapter	36
10	N37920	Equalizer	0
11	N19428	Hose - 2.54 ID x 2.79 OD x 5 Lg	36
12	N11905	Hose Clamp - 2 1/2 - HC5-44 (Air Cart side uses 36)	108
13	N64099	Hose Clamp - 3 - SSTCH5-400	112
14	N66325	Distribution Pipe Stand - Main	2
15	N66339	Distribution Pipe Support Bracket - Wing	10
16	N66359	Distribution Pipe Clamp - Wing	4
17	W-187	Hex Bolt - 3/8 x 1 1/4 Lg	64
18	BW-10	Hex Bolt - 3/4 x 1 3/4 Lg	2
19	D-4932	U-Bolt - 3/8 x 4 1/8 x 3 UL	4
20	C-3932	U-Bolt - 1/2 x 4 x 7 1/4 UL	10
21	S39649	U-Bolt - 5/8 x 4 x 7 3/4 UL	2
22	F-4642	U-Bolt - 5/8 x 6 x 5 1/2 UL	2
23	S27987	Locknut - 3/8 Center Lock	72
24	W-516	Nut - 1/2	20
25	W-517	Nut - 5/8	8
26	W-518	Nut - 3/4	2
27	W-525	Lockwasher - 1/2	20
28	W-526	Lockwasher - 5/8	8
29	W-527	Lockwasher - 3/4	2
30	R480034	Hose - .929 ID x 1.169 OD/ft (75 ft roll) 10"SP-1875 ft . . 12"SP-1500 ft . . 15"SP-1275 ft.	
31	R480055	Hose - 2 1/2 ID/ft Goodyear (100 ft rolls) (Air Cart side of couplers)	375
32	R480060	Hose - 3 ID/ft (100 ft rolls)	350
33	N66396	Primary Pipe SS - 3 x 48 Lg	4
34	N64092	Primary Pipe SS - 3 x 72 Lg	8
35	N64094	Primary Pipe SS - 3 x 96 Lg	12
36	N64096	Primary Pipe SS - 3 x 120 Lg	8
37	N66395	Primary Hose Guide Plate	2
38	N66775	Distribution Pipe Spacer - 6 pipe - Wing	6
39	N66855	Distribution Pipe Clamp - 2 pipe - Wing	2
40	N66860	Distribution Pipe Clamp - 4 pipe - Wing	4
41	S65390	Divider Head Pedestal - Main Frame	1
42	N67640	Head Mounting Bracket - Straight	2
43	N19723	U-Bolt - 3/8 x 4 1/16 x 6 15/16 UL	8

Dual Shoot - Stacked Heads - Tow Between - Prior to 2023
40 ft - 12m - 5 primaries - 12 and 15 inch (300 - 380mm) Spacing

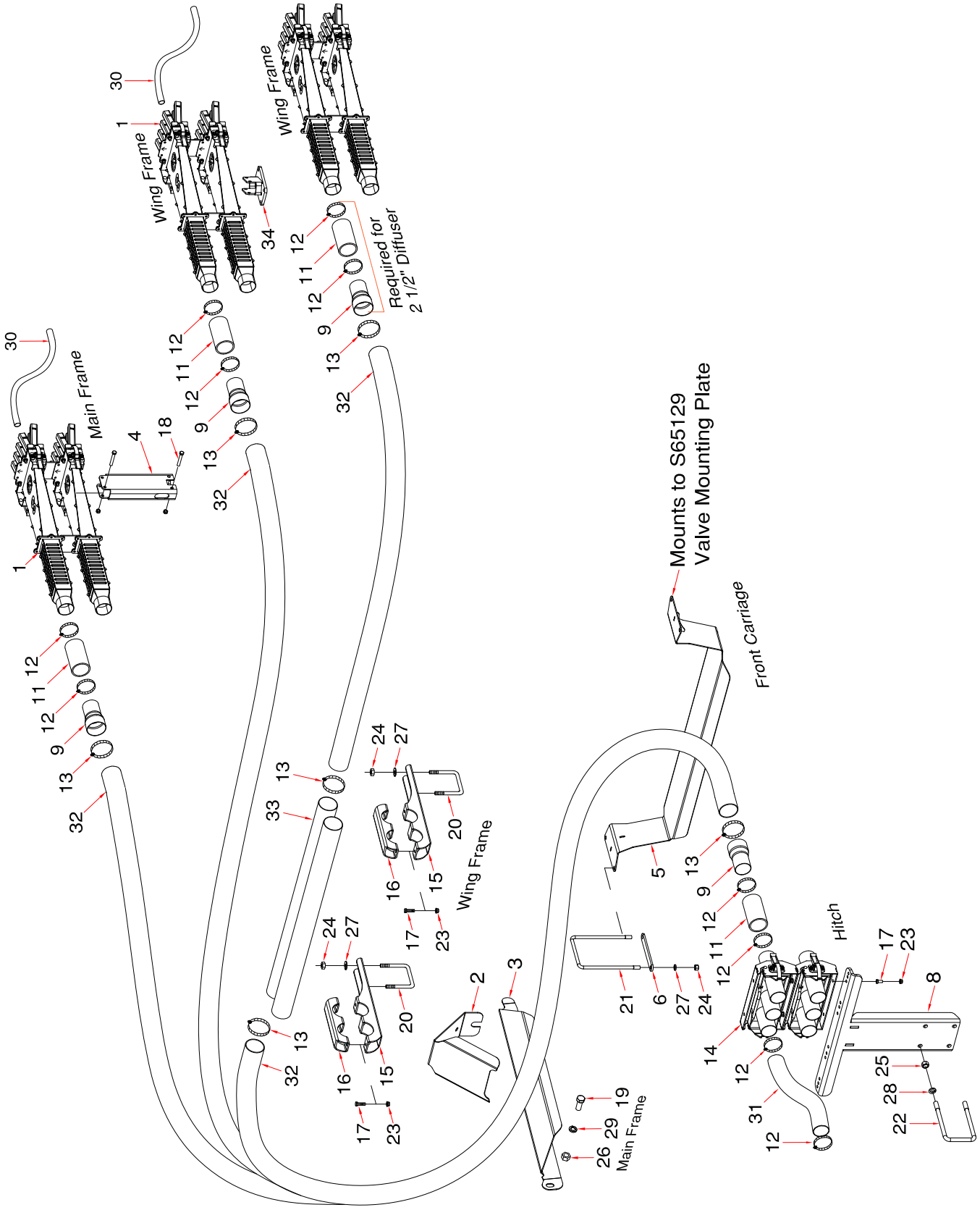

Dual Shoot Stacked Heads Tow Between - 40 ft - 12m - 5 primaries - Prior to 2023

Item	Part No.	Description	Qty
		For 12 and 15 inch - 300mm and 380mm spacing	
1	* * * * *	Divider Head Assembly (Refer to Divider Head Assembly for details)	
		12" spacing uses:	
		N66508 - Divider Head Assembly - 8 Outlet	10
		15" spacing uses:	
		N66506 - Divider Head Assembly - 6 Outlet	6
		N66507 - Divider Head Assembly - 7 Outlet	4
2	S67250	Primary Hose Deflector	2
3	S66430	Primary Hose Hose Suport - Main - Left side (shown)	1
	S66435	Primary Hose Hose Suport - Main - Right side	1
4	S65390	Divider Head Pedestal - Main Frame	1
5	N67245	Primary Hose Hose Suport - Between	1
6	N67274	Spacer Plate	1
7	N67275	Kit - Primary Hose Hose Suport - Between (Includes items 5, 6, 21, 24 and 27)	
8	N66234	Coupler Tower - Between	1
9	N64095	Primary Hose Adapter	20
10	* * * * *		
11	N19428	Hose - 2.54 ID x 2.79 OD x 5 Lg	20
12	N11905	Hose Clamp - 2 1/2 - HC5-44 (Air Cart side uses 20)	60
13	N64099	Hose Clamp - 3 - SSTCH5-400	28
14	* * * * *	Quick Coupler - 5 Run (Refer to Quick Coupler Assembly for details)	2
15	N66339	Distribution Pipe Support Bracket - 2 pipe - Wing	4
16	N66359	Distribution Pipe Clamp - 2 pipe - Wing	4
17	W-187	Hex Bolt - 3/8 x 1 1/4 Lg	12
18	W-480	Hex Bolt - 3/8 x 2 1/2 Lg (Refer to Divider Head Assembly for details)	2
19	BW-10	Hex Bolt - 3/4 x 1 3/4 Lg	2
20	C-3932	U-Bolt - 1/2 x 4 x 7 1/4 UL	4
21	H25628	U-Bolt - 1/2 x 6 1/16 x 9 3/8 UL	1
22	S39649	U-Bolt - 5/8 x 4 x 7 3/4 UL	2
23	S27987	Locknut - 3/8 Center Lock	12
24	W-516	Nut - 1/2	6
25	W-517	Nut - 5/8	4
26	W-518	Nut - 3/4	2
27	W-525	Lockwasher - 1/2	6
28	W-526	Lockwasher - 5/8	4
29	W-527	Lockwasher - 3/4	2
30	R480034	Hose - .929 ID x 1.169 OD/ft (75 ft roll) . . 12"SP-900 ft . . 15"SP-750 ft	
31	R480055	Hose - 2 1/2 ID/ft Goodyear (100 ft rolls) (Air Cart side of couplers)	140
32	R480060	Hose - 3 ID/ft (100 ft rolls)	200
33	N66396	Primary Pipe SS - 3 x 48 Lg	4
34	N67202	Head Mounting Bracket - 30 Degree - Right (shown)	1
34A	N67200	Head Mounting Bracket - 30 Degree - Left	1

Dual Shoot - Stacked Heads - Tow Between - Prior to 2023
40 ft - 12m - 6 primaries - 10 inch (250mm) Spacing

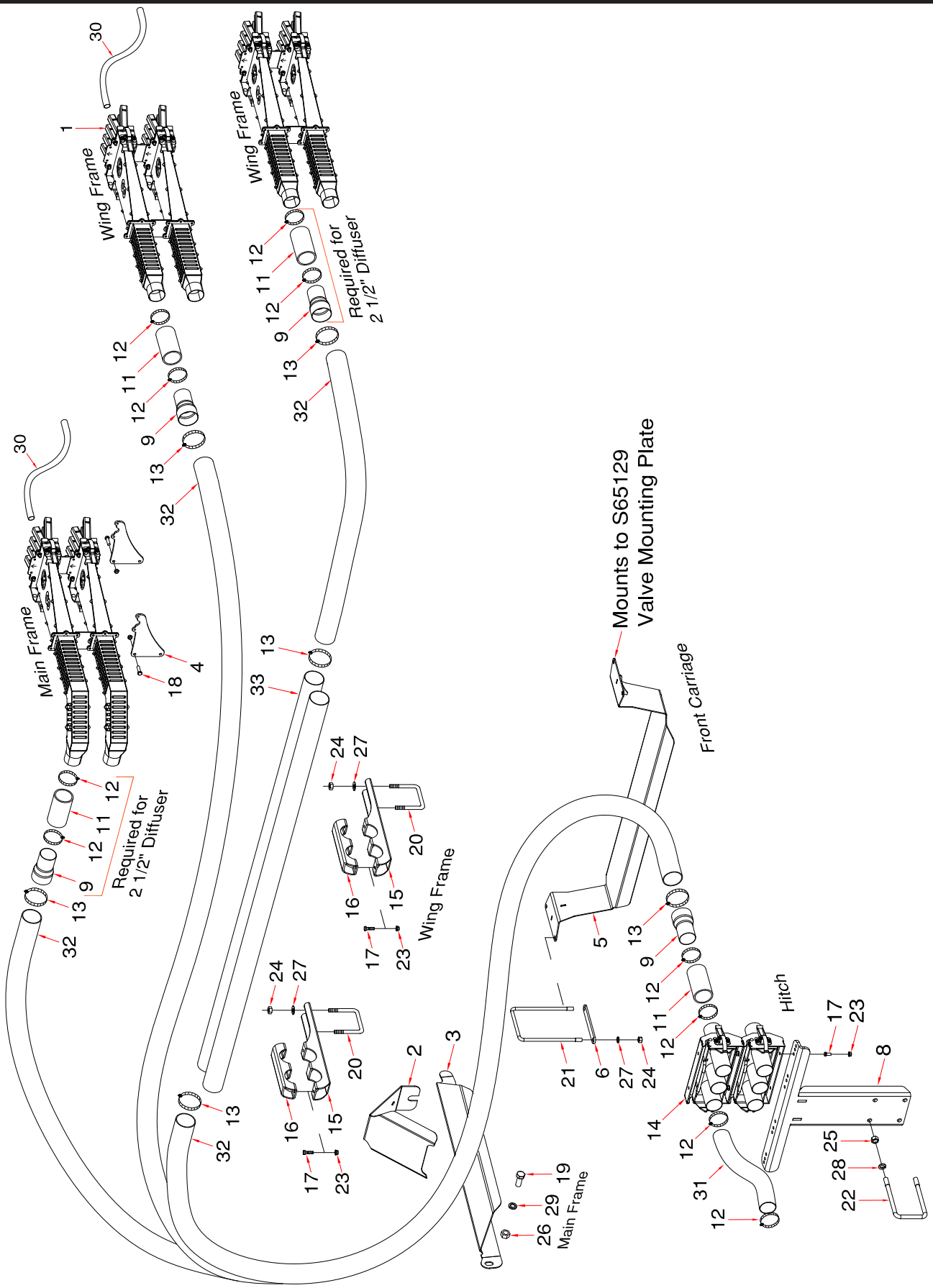

Dual Shoot Stacked Heads Tow Between - 40 ft - 12m - 6 primaries - Prior to 2023

Item	Part No.	Description	Qty
		For 10 - 250mm spacing	
1	* * * * *	Divider Head Assembly (Refer to Divider Head Assembly for details)	
		10" spacing uses:	
		N66508 - Divider Head Assembly - 8 Outlet	12
2	S67250	Primary Hose Deflector	2
3	S66430	Primary Hose Hose Suport - Main - Left side (shown)	1
	S66435	Primary Hose Hose Suport - Main - Right side	1
4	S65382	Head Mounting Plate - Main	4
5	N67245	Primary Hose Hose Suport - Between	1
6	N67274	Spacer Plate	1
7	N67275	Kit - Primary Hose Hose Suport - Between (Includes items 5, 6, 21, 24 and 27)	
8	N66234	Coupler Tower - Between	1
9	N64095	Primary Hose Adapter	12
10	* * * * *		
11	N19428	Hose - 2.54 ID x 2.79 OD x 5 Lg	12
12	N11905	Hose Clamp - 2 1/2 - HC5-44 (Air Cart side uses 24)	72
13	N64099	Hose Clamp - 3 - SSTCH5-400	32
14	* * * * *	Quick Coupler - 3 Run (Refer to Quick Coupler Assembly for details)	4
15	N66339	Distribution Pipe Support Bracket - 2 pipe - Wing	4
16	N66359	Distribution Pipe Clamp - 2 pipe - Wing	4
17	W-187	Hex Bolt - 3/8 x 1 1/4 Lg.	12
18	W-187	Hex Bolt - 3/8 x 1 1/4 Lg (Refer to Divider Head Assembly for details)	8
19	BW-10	Hex Bolt - 3/4 x 1 3/4 Lg.	2
20	C-3932	U-Bolt - 1/2 x 4 x 7 1/4 UL	4
21	H25628	U-Bolt - 1/2 x 6 1/16 x 9 3/8 UL	1
22	S39649	U-Bolt - 5/8 x 4 x 7 3/4 UL	2
23	S27987	Locknut - 3/8 Center Lock	12
24	W-516	Nut - 1/2	6
25	W-517	Nut - 5/8	4
26	W-518	Nut - 3/4	2
27	W-525	Lockwasher - 1/2	6
28	W-526	Lockwasher - 5/8	4
29	W-527	Lockwasher - 3/4	2
30	R480034	Hose - .929 ID x 1.169 OD/ft (75 ft roll) . . 10"SP-1125 ft	1125
31	R480055	Hose - 2 1/2 ID/ft Goodyear (100 ft rolls) (Air Cart side of couplers)	175
32	R480060	Hose - 3 ID/ft (100 ft rolls)	225
33	N64094	Primary Pipe SS - 3 x 96 Lg	4

Dual Shoot - Stacked Heads - Tow Between - Prior to 2023
50 ft - 15m - 6 primaries - 15 inch (380mm) Spacing

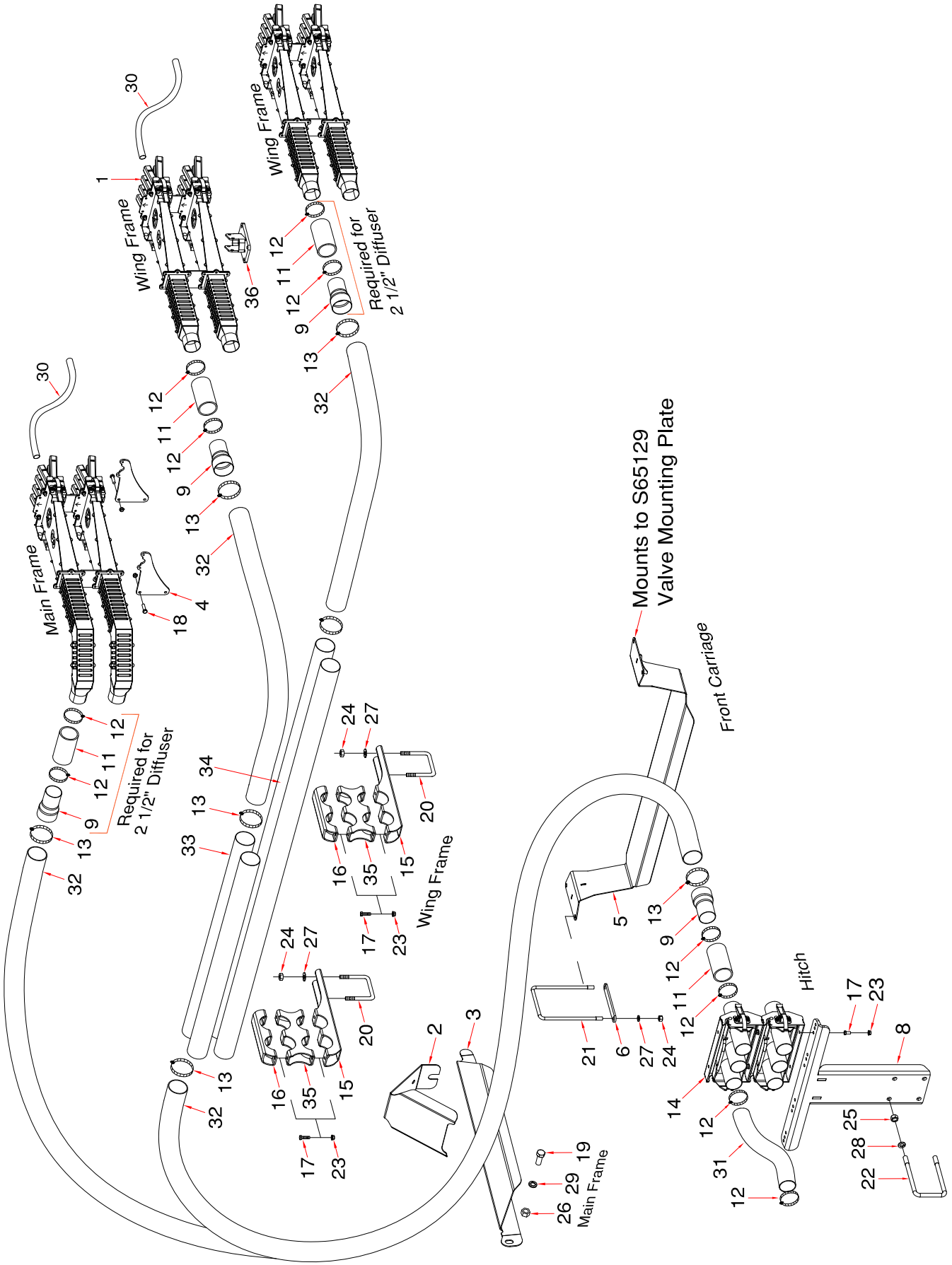

Dual Shoot Stacked Heads Tow Between - 50 ft - 15m - 6 primaries - Prior to 2023

Item	Part No.	Description	Qty
		For 15 inch - 380mm spacing	
1	* * * * *	Divider Head Assembly (Refer to Divider Head Assembly for details)	
		15" spacing uses:	
		N66506 - Divider Head Assembly - 6 Outlet	4
		N66507 - Divider Head Assembly - 7 Outlet	8
2	S67250	Primary Hose Deflector	2
3	S66430	Primary Hose Hose Suport - Main - Left side (shown)	1
	S66435	Primary Hose Hose Suport - Main - Right side	1
4	S65382	Head Mounting Plate - Main	4
5	N67245	Primary Hose Hose Suport - Between	1
6	N67274	Spacer Plate	1
7	N67275	Kit - Primary Hose Hose Suport - Between (Includes items 5, 6, 21, 24 and 27)	
8	N66234	Coupler Tower - Between	1
9	N64095	Primary Hose Adapter	12
10	* * * * *		
11	N19428	Hose - 2.54 ID x 2.79 OD x 5 Lg	12
12	N11905	Hose Clamp - 2 1/2 - HC5-44 (Air Cart side uses 24)	72
13	N64099	Hose Clamp - 3 - SSTCH5-400	40
14	* * * * *	Quick Coupler - 3 Run (Refer to Quick Coupler Assembly for details)	4
15	N66339	Distribution Pipe Support Bracket - 2 pipe - Wing	4
16	N66359	Distribution Pipe Clamp - 2 pipe - Wing	4
17	W-187	Hex Bolt - 3/8 x 1 1/4 Lg	20
18	W-187	Hex Bolt - 3/8 x 1 1/4 Lg (Refer to Divider Head Assembly for details)	8
19	BW-10	Hex Bolt - 3/4 x 1 3/4 Lg	2
20	C-3932	U-Bolt - 1/2 x 4 x 7 1/4 UL	4
21	H25628	U-Bolt - 1/2 x 6 1/16 x 9 3/8 UL	1
22	S39649	U-Bolt - 5/8 x 4 x 7 3/4 UL	2
23	S27987	Locknut - 3/8 Center Lock	20
24	W-516	Nut - 1/2	6
25	W-517	Nut - 5/8	4
26	W-518	Nut - 3/4	2
27	W-525	Lockwasher - 1/2	6
28	W-526	Lockwasher - 5/8	4
29	W-527	Lockwasher - 3/4	2
30	R480034	Hose - .929 ID x 1.169 OD/ft (75 ft roll)	900
31	R480055	Hose - 2 1/2 ID/ft Goodyear (100 ft rolls) (Air Cart side of couplers)	175
32	R480060	Hose - 3 ID/ft (100 ft rolls)	225
33	N66396	Primary Pipe SS - 3 x 48 Lg	4
34	N64094	Primary Pipe SS - 3 x 96 Lg	4
35	N66358	Distribution Pipe Spacer - 2 pipe - Wing	4
36	N67202	Head Mounting Bracket - 30 Degree - Right (shown)	1
36A	N67200	Head Mounting Bracket - 30 Degree - Left	1

Dual Shoot - Stacked Heads - Tow Between - Prior to 2023
50 ft - 15m - 7 primaries - 10 and 12 inch (250 - 300mm) Spacing

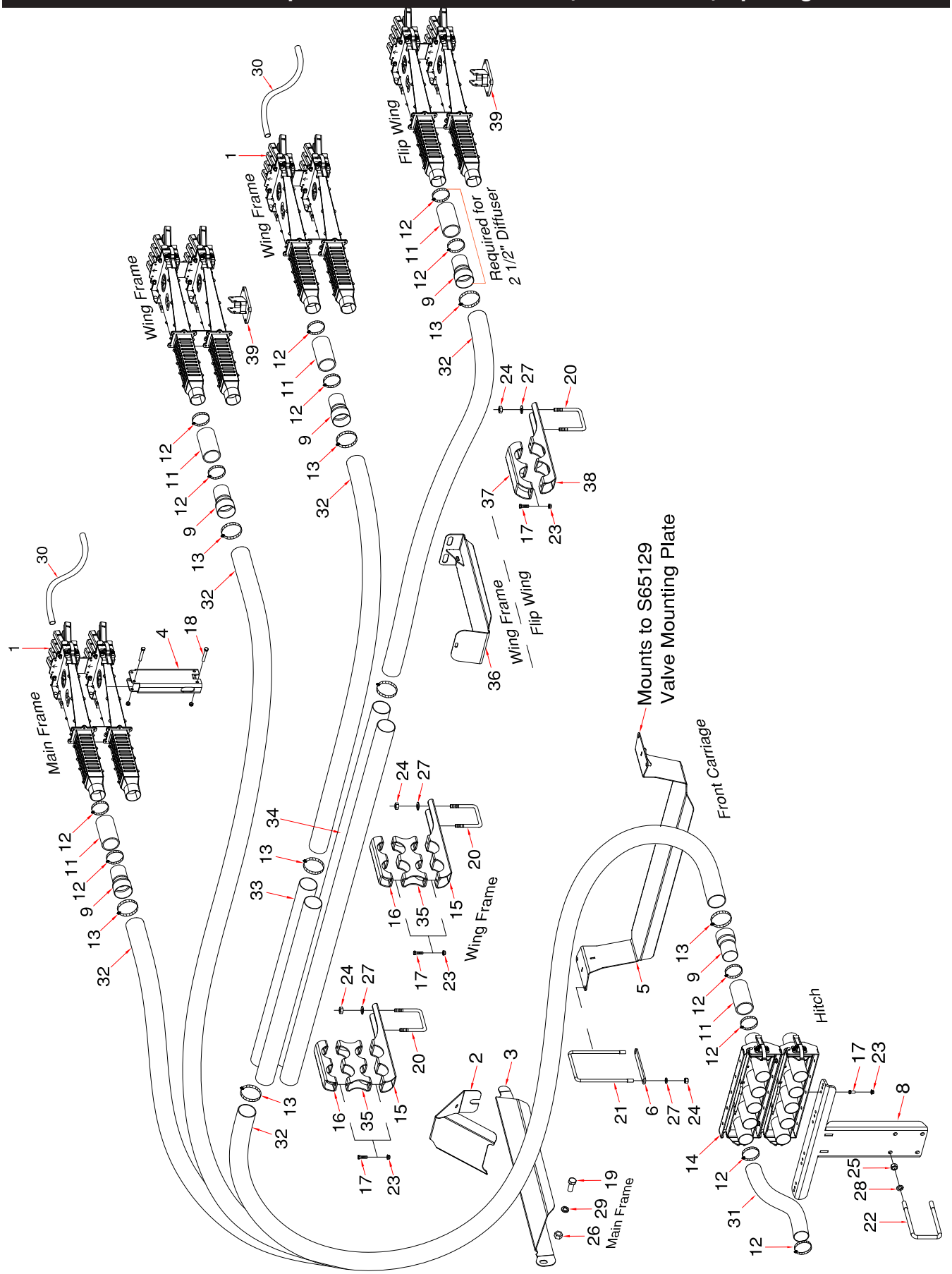

Dual Shoot Stacked Heads Tow Between - 50 ft - 15m - 7 primaries - Prior to 2023

Item	Part No.	Description	Qty
		For 10 and 12 inch - 250mm and 300mm spacing	
1	* * * * *	Divider Head Assembly (Refer to Divider Head Assembly for details)	
		10" spacing uses:	
		N66508 - Divider Head Assembly - 8 Outlet	6
		N66509 - Divider Head Assembly - 9 Outlet	8
		12" spacing uses:	
		N66507 - Divider Head Assembly - 7 Outlet	12
		N66508 - Divider Head Assembly - 8 Outlet	2
2	S67250	Primary Hose Deflector	2
3	S66430	Primary Hose Hose Suport - Main - Left side (shown)	1
	S66435	Primary Hose Hose Suport - Main - Right side	1
4	S65390	Divider Head Pedestal - Main Frame	1
5	N67245	Primary Hose Hose Suport - Between	1
6	N67274	Spacer Plate	1
7	N67275	Kit - Primary Hose Hose Suport - Between (Includes items 5, 6, 21, 24 and 27)	
8	N66234	Coupler Tower - Between	1
9	N64095	Primary Hose Adapter	14
10	* * * * *		
11	N19428	Hose - 2.54 ID x 2.79 OD x 5 Lg	14
12	N11905	Hose Clamp - 2 1/2 - HC5-44 (Air Cart side uses 28)	84
13	N64099	Hose Clamp - 3 - SSTCH5-400	44
14	* * * * *	Quick Coupler - 5 Run (Refer to Quick Coupler Assembly for details)	4
15	N66339	Distribution Pipe Support Bracket - 2 pipe - Wing	4
16	N66359	Distribution Pipe Clamp - 2 pipe - Wing	4
17	W-187	Hex Bolt - 3/8 x 1 1/4 Lg	24
18	W-480	Hex Bolt - 3/8 x 2 1/2 Lg (Refer to Divider Head Assembly for details)	2
19	BW-10	Hex Bolt - 3/4 x 1 3/4 Lg	2
20	C-3932	U-Bolt - 1/2 x 4 x 7 1/4 UL	6
21	H25628	U-Bolt - 1/2 x 6 1/16 x 9 3/8 UL	1
22	S39649	U-Bolt - 5/8 x 4 x 7 3/4 UL	2
23	S27987	Locknut - 3/8 Center Lock	24
24	W-516	Nut - 1/2	14
25	W-517	Nut - 5/8	4
26	W-518	Nut - 3/4	2
27	W-525	Lockwasher - 1/2	14
28	W-526	Lockwasher - 5/8	4
29	W-527	Lockwasher - 3/4	2
30	R480034	Hose - .929 ID x 1.169 OD/ft (75 ft roll) 10"SP-1350 ft . . 12"SP-1125 ft . .	
31	R480055	Hose - 2 1/2 ID/ft Goodyear (100 ft rolls) (Air Cart side of couplers)	200
32	R480060	Hose - 3 ID/ft (100 ft rolls)	300
33	N66396	Primary Pipe SS - 3 x 48 Lg	4
34	N64094	Primary Pipe SS - 3 x 96 Lg	4
35	N66358	Distribution Pipe Spacer - 2 pipe - Wing	4
36	N67295	Primary Hose Guide Plate - Wing	2
37	N66374	Distribution Hose Clamp - Wing - 3 5/8 Dia	2
38	N66375	Distribution Hose Support Bracket - Wing - 3 5/8 Dia	2
39	N67202	Head Mounting Bracket - 30 Degree - Right (shown)	2
39A	N67200	Head Mounting Bracket - 30 Degree - Left	2

Dual Shoot - Stacked Heads - Tow Between - Prior to 2023
60 ft - 18m - 8 primaries - 10, 12 and 15 inch (250 - 300 - 380mm) Spacing

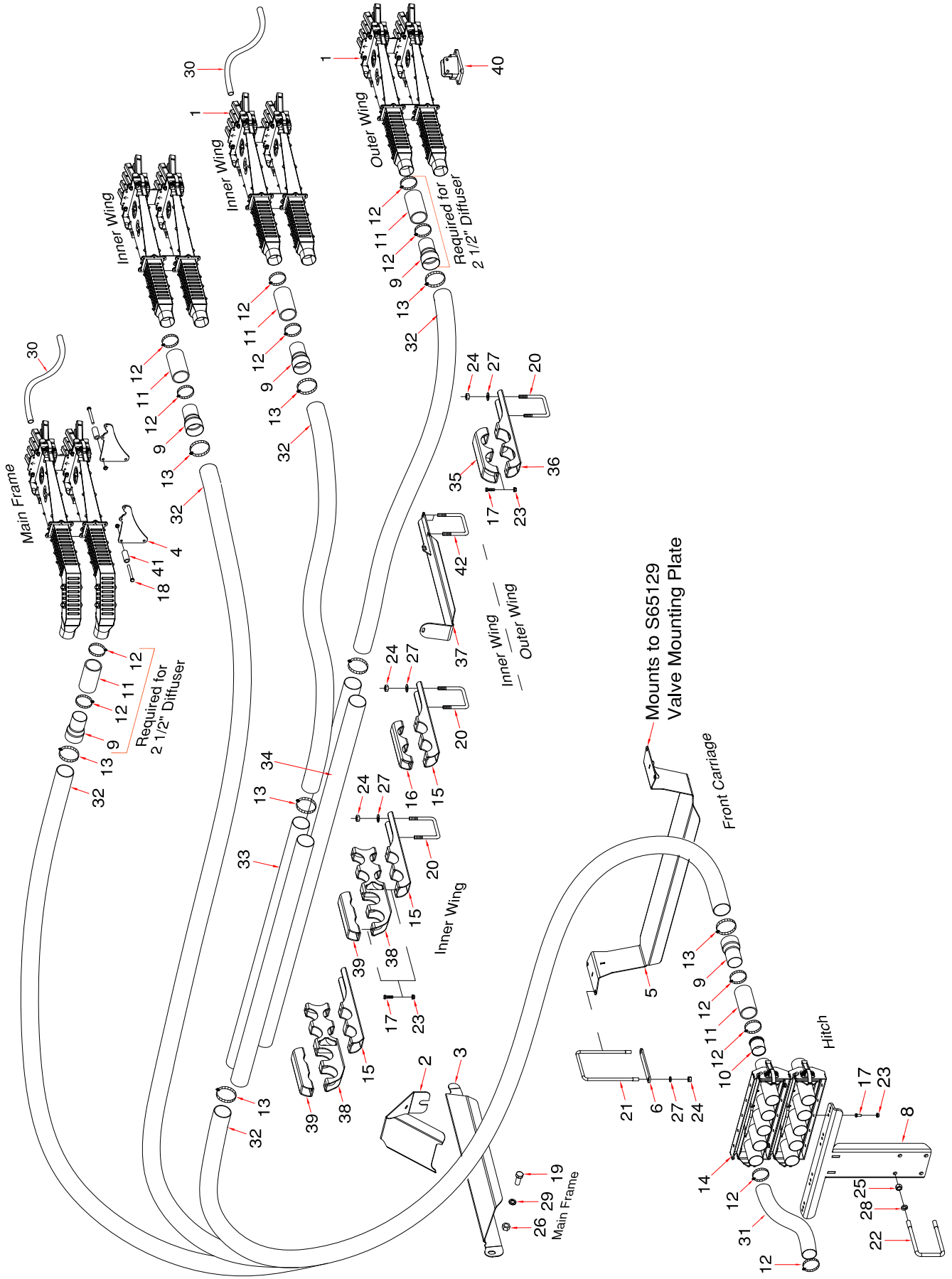

Dual Shoot Stacked Heads Tow Between - 60 ft - 18m - 8 primaries - Prior to 2023

Item	Part No.	Description	Qty
		For 10, 12 and 15 inch - 250mm, 300mm and 380mm spacing	
1	* * * * *	Divider Head Assembly (Refer to Divider Head Assembly for details)	
		10" spacing uses:	
		N66509 - Divider Head Assembly - 9 Outlet	16
		12" spacing uses:	
		N66507 - Divider Head Assembly - 7 Outlet	8
		N66508 - Divider Head Assembly - 8 Outlet	8
		15" spacing uses 8 # 6 heads	
		N66506 - Divider Head Assembly - 6 Outlet	16
2	S67250	Primary Hose Deflector	2
3	S66430	Primary Hose Hose Suport - Main - Left side (shown)	1
	S66435	Primary Hose Hose Suport - Main - Right side	1
4	S65382	Head Mounting Plate - Main	4
5	N67245	Primary Hose Hose Suport - Between	1
6	N67274	Spacer Plate	1
7	N67275	Kit - Primary Hose Hose Suport - Between (Includes items 5, 6, 21, 24 and 27)	
8	N66234	Coupler Tower - Between	1
9	N64095	Primary Hose Adapter	16
10	N37920	Equalizer	0
11	N19428	Hose - 2.54 ID x 2.79 OD x 5 Lg	16
12	N11905	Hose Clamp - 2 1/2 - HC5-44 (Air Cart side uses 32)	96
13	N64099	Hose Clamp - 3 - SSTCH5-400	48
14	* * * * *	Quick Coupler - 5 Run (Refer to Quick Coupler Assembly for details)	4
15	N66339	Distribution Pipe Support Bracket - 2 pipe - Wing - Wing	6
16	N66359	Distribution Pipe Clamp - 2 pipe - Wing - Wing	2
17	W-187	Hex Bolt - 3/8 x 1 1/4 Lg	28
18	S-1299	Hex Bolt - 3/8 x 4 1/2 Lg (Refer to Divider Head Assembly for details)	8
19	BW-10	Hex Bolt - 3/4 x 1 3/4 Lg	2
20	C-3932	U-Bolt - 1/2 x 4 x 7 1/4 UL	8
21	H25628	U-Bolt - 1/2 x 6 1/16 x 9 3/8 UL	1
22	S39649	U-Bolt - 5/8 x 4 x 7 3/4 UL	2
23	S27987	Locknut - 3/8 Center Lock	28
24	W-516	Nut - 1/2	18
25	W-517	Nut - 5/8	4
26	W-518	Nut - 3/4	2
27	W-525	Lockwasher - 1/2	18
28	W-526	Lockwasher - 5/8	4
29	W-527	Lockwasher - 3/4	2
30	R480034	Hose - .929 ID x 1.169 OD/ft (75 ft roll) 10"SP-1650 ft . . 12"SP-1350 ft . . 15"SP-1125 ft .	
31	R480055	Hose - 2 1/2 ID/ft Goodyear (100 ft rolls) (Air Cart side of couplers)	225
32	R480060	Hose - 3 ID/ft (100 ft rolls)	325
33	N66092	Primary Pipe SS - 3 x 72 Lg	4
34	N64094	Primary Pipe SS - 3 x 96 Lg	4
35	N66374	Distribution Hose Clamp - Wing - 3 5/8 Dia	2
36	N66375	Distribution Hose Support Bracket - Wing - 3 5/8 Dia	2
37	N66395	Primary Hose Guide Plate - Wing	2
38	N66775	Distribution Pipe Spacer - 6 pipe - Wing	4
39	N66855	Distribution Pipe Clamp - 2 pipe - Wing	4
40	N67200	Head Mounting Bracket - 30 Degree - Left (shown)	1
40A	N67202	Head Mounting Bracket - 30 Degree - Right	1
41	N50842	Bushings - .385 ID x 5/8 OD x 3 1/4 Lg	8
42	N19723	U-Bolt - 3/8 x 4 1/16 x 6 15/16 UL	8

Dual Shoot - Stacked Heads - Tow Between - Prior to 2023
70 ft - 21m - 9 primaries - 10, 12 and 15 inch (250 - 300 - 380mm) Spacing

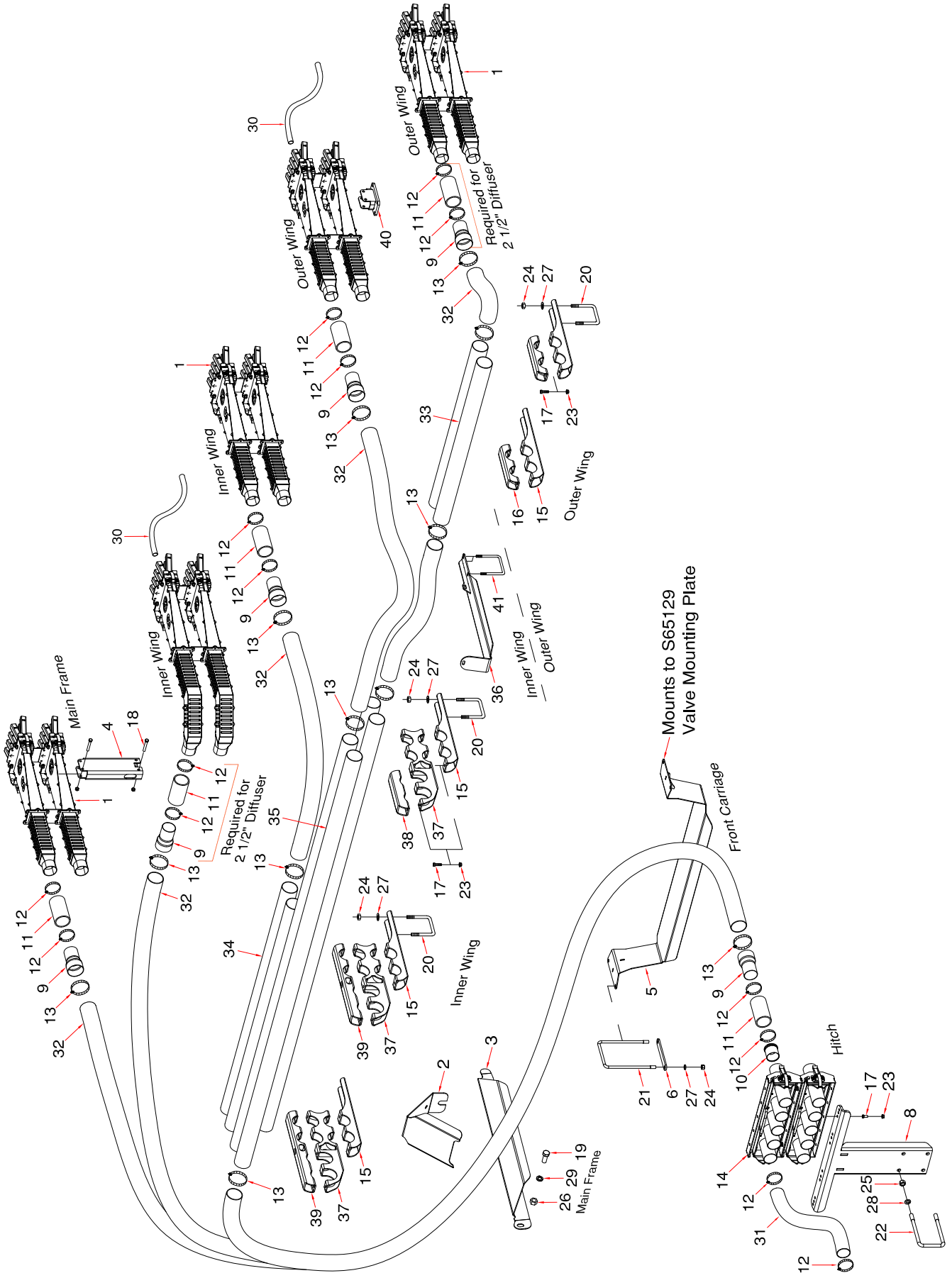

Dual Shoot Stacked Heads Tow Between - 70 ft - 21m - 9 primaries - Prior to 2023

Item	Part No.	Description	Qty
		For 10, 12 and 15 inch - 250mm, 300mm and 380mm spacing	
1	* * * * *	Divider Head Assembly (Refer to Divider Head Assembly for details)	
		10" spacing uses:	
		N66509 - Divider Head Assembly - 9 Outlet	12
		N66510 - Divider Head Assembly - 10 Outlet	6
		12" spacing uses:	
		N66507 - Divider Head Assembly - 7 Outlet	4
		N66508 - Divider Head Assembly - 8 Outlet	14
		15" spacing uses:	
		N66506 - Divider Head Assembly - 6 Outlet	14
		N66507 - Divider Head Assembly - 7 Outlet	4
2	S67250	Primary Hose Deflector	2
3	S66430	Primary Hose Hose Suport - Main - Left side (shown)	1
	S66435	Primary Hose Hose Suport - Main - Right side	1
4	S65390	Divider Head Pedestal - Main Frame	1
5	N67245	Primary Hose Hose Suport - Between	1
6	N67274	Spacer Plate	1
7	N67275	Kit - Primary Hose Hose Suport - Between (Includes items 5, 6, 21, 24 and 27)	
8	N66234	Coupler Tower - Between	1
9	N64095	Primary Hose Adapter	18
10	N37920	Equalizer	0
11	N19428	Hose - 2.54 ID x 2.79 OD x 5 Lg	18
12	N11905	Hose Clamp - 2 1/2 - HC5-44 (Air Cart side uses 36)	108
13	N64099	Hose Clamp - 3 - SSTCH5-400	68
14	* * * * *	Quick Coupler - 5 Run (Refer to Quick Coupler Assembly for details)	4
15	N66339	Distribution Pipe Support Bracket - Wing	10
16	N66359	Distribution Pipe Clamp - Wing	4
17	W-187	Hex Bolt - 3/8 x 1 1/4 Lg	40
18	W-480	Hex Bolt - 3/8 x 2 1/2 Lg (Refer to Divider Head Assembly for details)	2
19	BW-10	Hex Bolt - 3/4 x 1 3/4 Lg	2
20	C-3932	U-Bolt - 1/2 x 4 x 7 1/4 UL	10
21	H25628	U-Bolt - 1/2 x 6 1/16 x 9 3/8 UL	1
22	S39649	U-Bolt - 5/8 x 4 x 7 3/4 UL	2
23	S27987	Locknut - 3/8 Center Lock	40
24	W-516	Hex Nut - 1/2	22
25	W-517	Hex Nut - 5/8	4
26	W-518	Hex Nut - 3/4	2
27	W-525	Lockwasher - 1/2	22
28	W-526	Lockwasher - 5/8	4
29	W-527	Lockwasher - 3/4	2
30	R480034	Hose - .929 ID x 1.169 OD/ft (75 ft roll) 10"SP-1875 ft . . 12"SP-1500 ft . . 15"SP-1275 ft.	
31	R480055	Hose - 2 1/2 ID/ft Goodyear (100 ft rolls) (Air Cart side of couplers)	250
32	R480060	Hose - 3 ID/ft (100 ft rolls)	400
33	N66396	Primary Pipe SS - 3 x 48 Lg	4
34	N64092	Primary Pipe SS - 3 x 72 Lg	4
35	N64096	Primary Pipe SS - 3 x 120 Lg	8
36	N66395	Primary Hose Guide Plate	2
37	N66775	Distribution Pipe Spacer - 6 pipe - Wing	6
38	N66855	Distribution Pipe Clamp - 2 pipe - Wing	2
39	N66860	Distribution Pipe Clamp - 4 pipe - Wing	4
40	N67640	Head Mounting Bracket - Straight	2
41	N19723	U-Bolt - 3/8 x 4 1/16 x 6 15/16 UL	8

Dual Shoot - Offset Heads - Tow Behind - 2023 to Present
40 ft - 12m - 5 primaries - 12 and 15 inch (300 - 380mm) Spacing

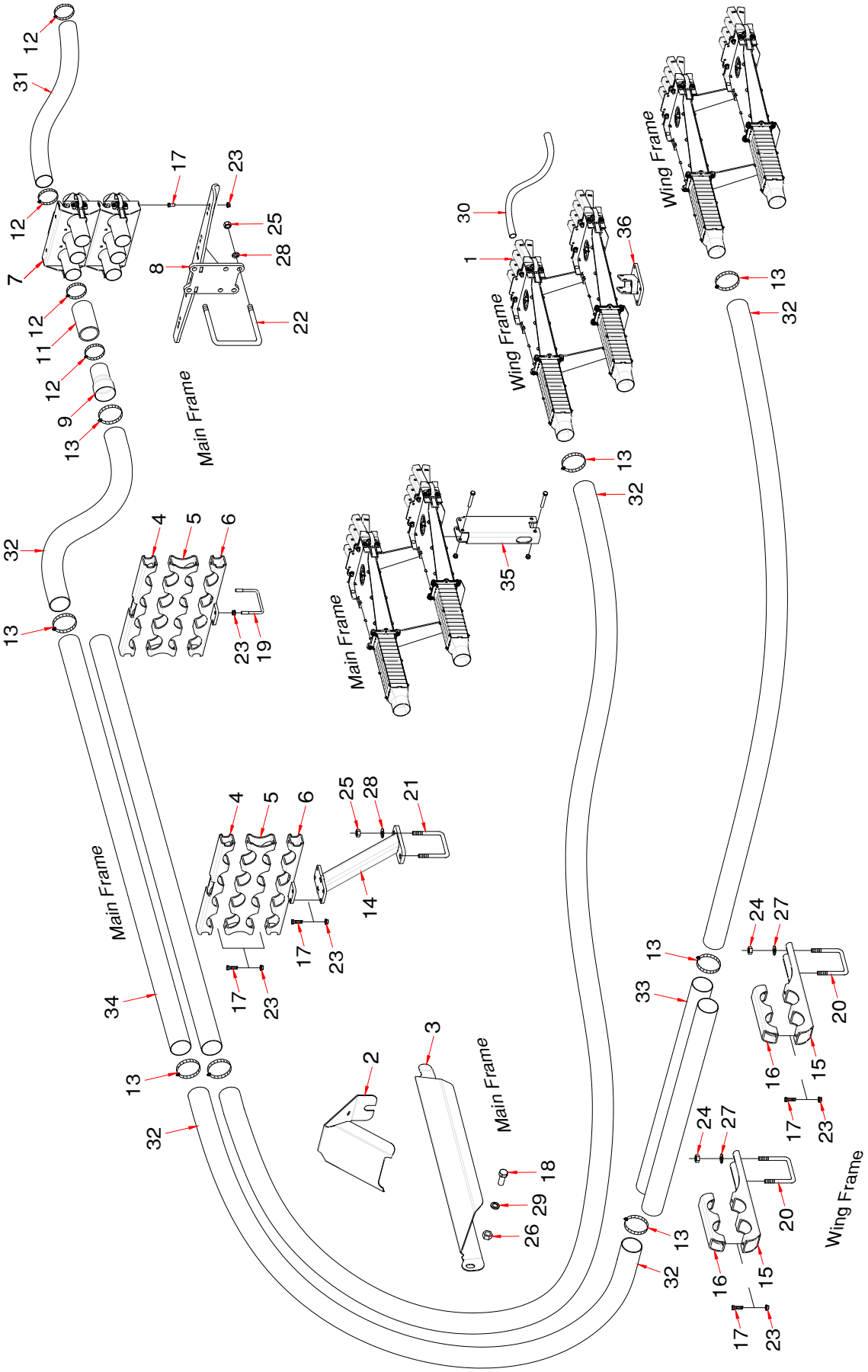

Dual Shoot Offset Heads Tow Behind - 40 ft - 12m - 5 primaries - 2023 to Present

Item	Part No.	Description	Qty
		For 12 and 15 inch - 300mm and 380mm spacing	
1	* * * * *	Divider Head Assembly (Refer to Divider Head Assembly for details)	
		12" spacing uses:	
		N66508 - Divider Head Assembly - 8 Outlet	10
		15" spacing uses:	
		N66506 - Divider Head Assembly - 6 Outlet	6
		N66507 - Divider Head Assembly - 7 Outlet	4
2	S67250	Primary Hose Deflector	2
3	S66430	Primary Hose Hose Suport - Main - Left side (shown)	1
	S66435	Primary Hose Hose Suport - Main - Right side	1
4	N66321	Distribution Pipe Clamp - Main	4
5	N66322	Distribution Pipe Spacer - Main	4
6	N66335	Distribution Pipe Clamp Bracket - Main	4
7	* * * * *	Quick Coupler - 3 Run (Refer to Quick Coupler Assembly for details)	4
8	N53203	Coupler Tower - Behind	1
9	N64095	Primary Hose Adapter	20
10	* * * * *		
11	N19428	Hose - 2.54 ID x 2.79 OD x 5 Lg	20
12	N11905	Hose Clamp - 2 1/2 - HC5-44 (Air Cart side uses 20)	60
13	N64099	Hose Clamp - 3 - SSTCH5-400 (Range 3 1/8 - 3 3/4)	44
14	N66325	Distribution Pipe Stand - Main	2
15	N66339	Distribution Pipe Support Bracket - 2 pipe - Wing	4
16	N66359	Distribution Pipe Clamp - 2 pipe - Wing	4
17	W-187	Hex Bolt - 3/8 x 1 1/4 Lg	40
18	BW-10	Hex Bolt - 3/4 x 1 3/4 Lg	2
19	D-4932	U-Bolt - 3/8 x 4 1/8 x 3 UL	4
20	C-3932	U-Bolt - 1/2 x 4 x 7 1/4 UL	4
21	S39649	U-Bolt - 5/8 x 4 x 7 3/4 UL	2
22	F-4642	U-Bolt - 5/8 x 6 x 5 1/2 UL	2
23	S27987	Locknut - 3/8 Center Lock	48
24	W-516	Nut - 1/2	8
25	W-517	Nut - 5/8	8
26	W-518	Nut - 3/4	2
27	W-525	Lockwasher - 1/2	8
28	W-526	Lockwasher - 5/8	8
29	W-527	Lockwasher - 3/4	2
30	R480034	Hose - .929 ID x 1.169 OD/ft (75 ft roll) . . .12"SP-900 ft . . .15"SP-750 ft . . Prior to 2023	
	N73085	Hose - 1 ID x 1.250 OD (100 ft roll) - 2023 to 2025	
	N75770	**Hose - 1 ID x 1.250 OD (100 ft roll) - RED (Fertilizer) - 2026 to Present**	
	N75771	**Hose - 1 ID x 1.250 OD (100 ft roll) - BLACK (Seed) - 2026 to Present**	
31	N69294	Hose - 2 1/2 ID x 100 ft roll - **Black** (Air Cart side of couplers) (**Seed**)	200ft
	N72592	Hose - 2 1/2 ID x 100 ft roll - **Red** (Air Cart side of couplers) (**Fertilizer**)	
32	N75812	Hose - 3 ID x 100 ft roll - **Black** - (**Seed**)	175ft
	N75813	Hose - 3 ID x 100 ft roll - **Red** - (**Fertilizer**)	
33	N66396	Primary Pipe SS - 3 x 48 Lg	4
34	N64094	Primary Pipe SS - 3 x 96 Lg	8
35	S65390	Divider Head Pedestal - Main Frame	1
36	N67202	Head Mounting Bracket - 30 Degree - Right (shown)	1
36A	N67200	Head Mounting Bracket - 30 Degree - Left	1

Dual Shoot - Offset Heads - Tow Behind - 2023 to Present
40 ft - 12m - 6 primaries - 10 inch (250mm) Spacing

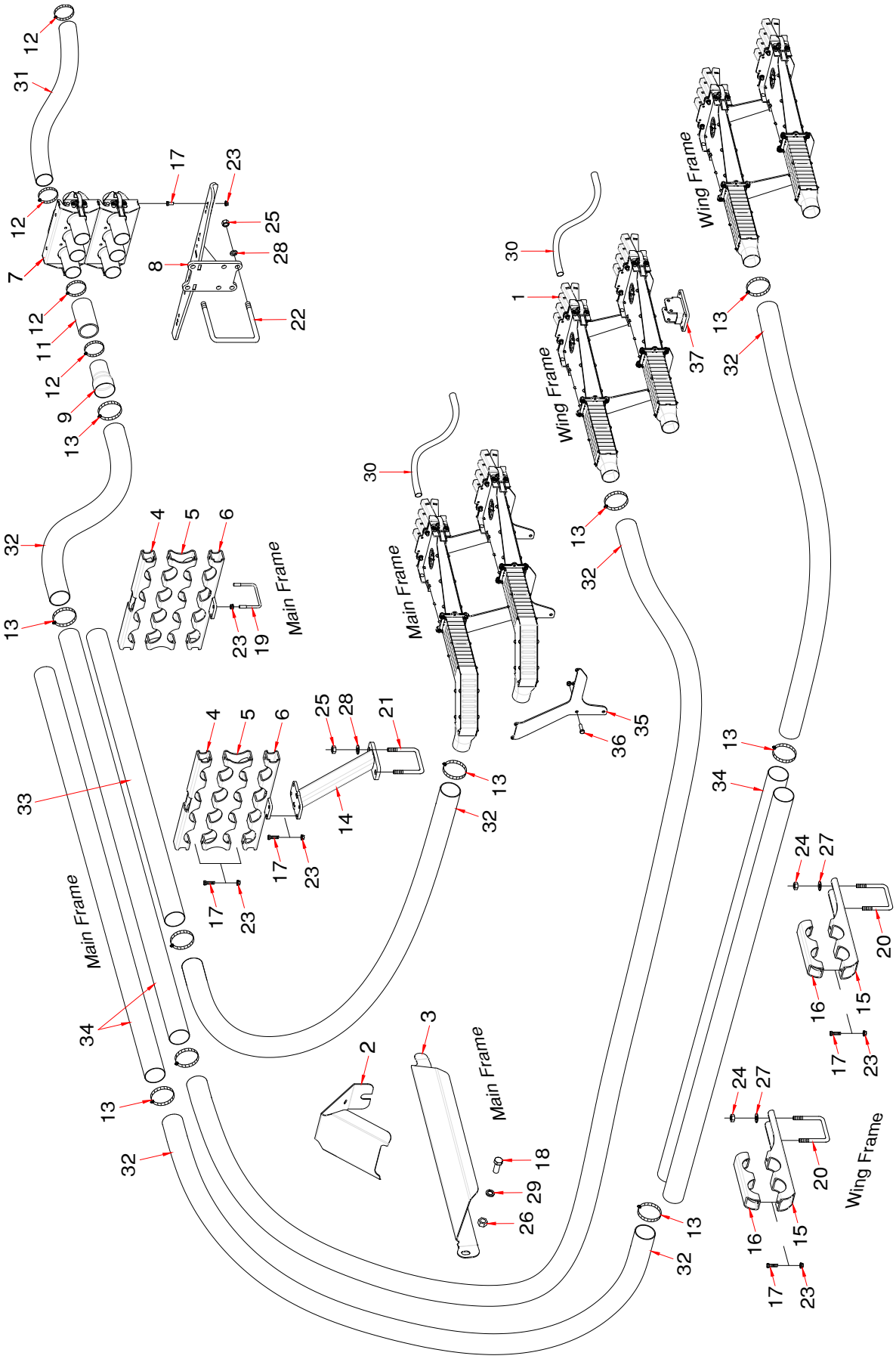

Dual Shoot Offset Heads Tow Behind - 40 ft -12m - 6 primaries - 2023 to Present

Item	Part No.	Description	Qty
		For 10 inch - 250mm spacing	
1	* * * * *	Divider Head Assembly (Refer to Divider Head Assembly for details)	
		10" spacing uses:	
		N66508 - Divider Head Assembly - 8 Outlet	12
2	S67250	Primary Hose Deflector	2
3	S66430	Primary Hose Hose Suport - Main - Left side (shown)	1
	S66435	Primary Hose Hose Suport - Main - Right side	1
4	N66321	Distribution Pipe Clamp - Main	4
5	N66322	Distribution Pipe Spacer - Main	4
6	N66335	Distribution Pipe Clamp Bracket - Main	4
7	* * * * *	Quick Coupler - 3 Run (Refer to Quick Coupler Assembly for details)	4
8	N53203	Coupler Tower - Behind	1
9	N64095	Primary Hose Adapter	24
10	* * * * *		
11	N19428	Hose - 2.54 ID x 2.79 OD x 5 Lg	24
12	N11905	Hose Clamp - 2 1/2 - HC5-44 (Air Cart side uses 24)	72
13	N64099	Hose Clamp - 3 - SSTCH5-400 (Range 3 1/8 - 3 3/4)	54
14	N66325	Distribution Pipe Stand - Main	2
15	N66339	Distribution Pipe Support Bracket - 2 pipe - Wing	4
16	N66359	Distribution Pipe Clamp - 2 pipe - Wing	4
17	W-187	Hex Bolt - 3/8 x 1 1/4 Lg.	40
18	BW-10	Hex Bolt - 3/4 x 1 3/4 Lg.	2
19	D-4932	U-Bolt - 3/8 x 4 1/8 x 3 UL	4
20	C-3932	U-Bolt - 1/2 x 4 x 7 1/4 UL	4
21	S39649	U-Bolt - 5/8 x 4 x 7 3/4 UL	2
22	F-4642	U-Bolt - 5/8 x 6 x 5 1/2 UL	2
23	S27987	Locknut - 3/8 Center Lock	48
24	W-516	Nut - 1/2	8
25	W-517	Nut - 5/8	8
26	W-518	Nut - 3/4	2
27	W-525	Lockwasher - 1/2	8
28	W-526	Lockwasher - 5/8	8
29	W-527	Lockwasher - 3/4	2
30	R480034	Hose - .929 ID x 1.169 OD/ft (75 ft roll) . . Prior to 2023	1125
	N73085	Hose - 1 ID x 1.250 OD (100 ft roll) - 2023 to 2025	
	N75770	**Hose - 1 ID x 1.250 OD (100 ft roll) - RED (Fertilizer) - 2026 to Present**	
	N75771	**Hose - 1 ID x 1.250 OD (100 ft roll) - BLACK (Seed) - 2026 to Present**	
31	N69294	Hose - 2 1/2 ID x 100 ft roll - **Black** (Air Cart side of couplers) (**Seed**)	250ft
	N72592	Hose - 2 1/2 ID x 100 ft roll - **Red** (Air Cart side of couplers) (**Fertilizer**)	
32	N75812	Hose - 3 ID x 100 ft roll - **Black** - (**Seed**)	175ft
	N75813	Hose - 3 ID x 100 ft roll - **Red** - (**Fertilizer**)	
33	N64092	Primary Pipe SS - 3 x 72 Lg	4
34	N64094	Primary Pipe SS - 3 x 96 Lg	12
35	**N72719**	**Offset Head Mounting Plate - Main Frame**	**4**
36	W-187	Hex Bolt - 3/8 x 1 1/4 Lg.	8
37	**N67640**	**Head Mounting Bracket - Straight**	**1**

Dual Shoot - Offset Heads - Tow Behind - 2023 to Present
50 ft - 15m - 6 primaries - 15 inch (380mm) Spacing

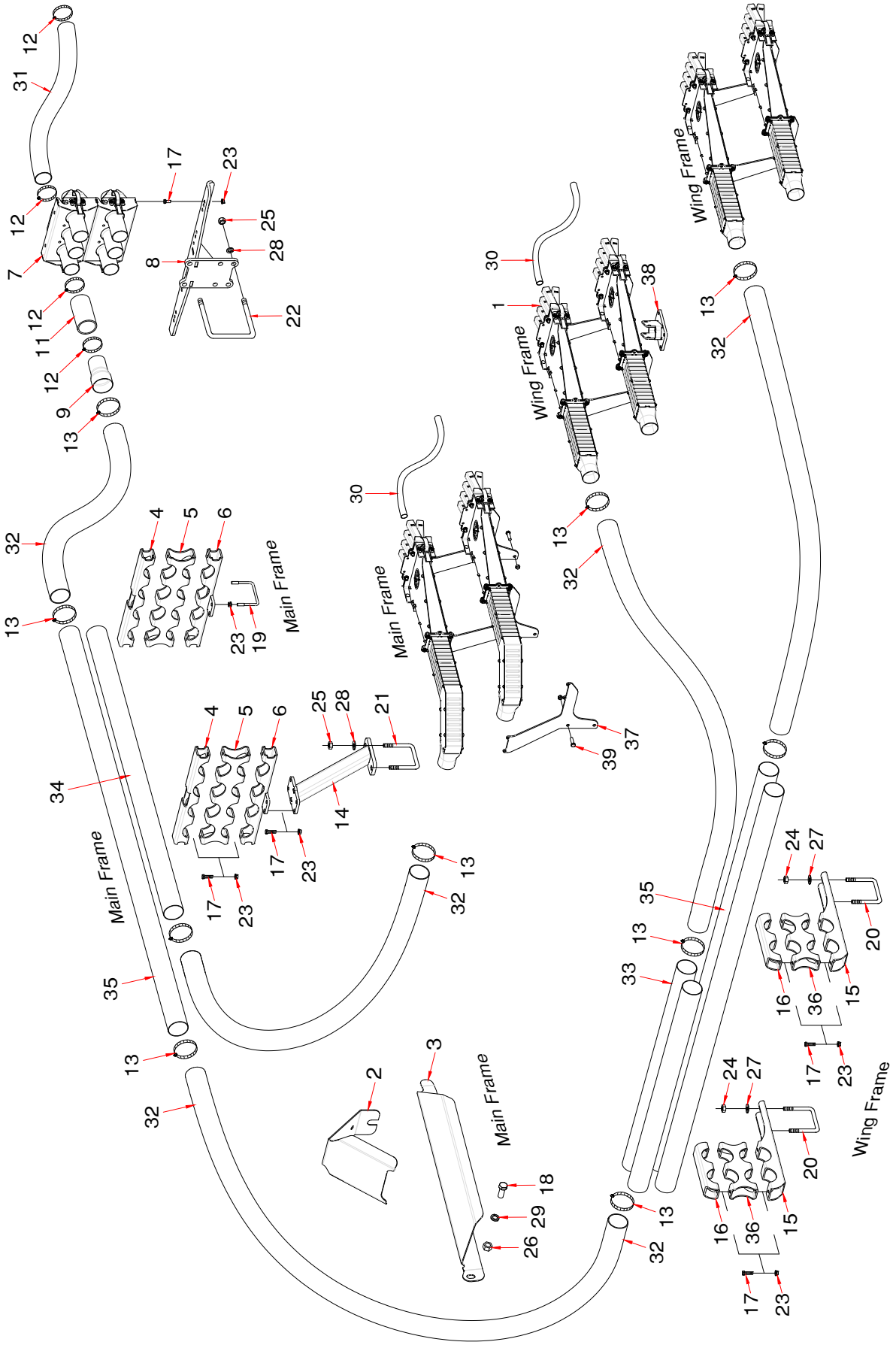

Dual Shoot Offset Heads Tow Behind - 50 ft - 15m - 6 primaries - 2023 to Present

Item	Part No.	Description	Qty
		For 15 inch - 380mm spacing	
1	* * * * *	Divider Head Assembly (Refer to Divider Head Assembly for details)	
		15" spacing uses:	
		N66506 - Divider Head Assembly - 6 Outlet	4
		N66507 - Divider Head Assembly - 7 Outlet	8
2	S67250	Primary Hose Deflector	2
3	S66430	Primary Hose Hose Suport - Main - Left side (shown)	1
	S66435	Primary Hose Hose Suport - Main - Right side	1
4	N66321	Distribution Pipe Clamp - Main	4
5	N66322	Distribution Pipe Spacer - Main	4
6	N66335	Distribution Pipe Clamp Bracket - Main	4
7	* * * * *	Quick Coupler - 3 Run (Refer to Quick Coupler Assembly for details)	4
8	N53203	Coupler Tower - Behind	1
9	N64095	Primary Hose Adapter	24
10	* * * * *		
11	N19428	Hose - 2.54 ID x 2.79 OD x 5 Lg	24
12	N11905	Hose Clamp - 2 1/2 - HC5-44 (Air Cart side uses 24)	72
13	N64099	Hose Clamp - 3 - SSTCH5-400 (Range 3 1/8 - 3 3/4)	64
14	N66325	Distribution Pipe Stand - Main	2
15	N66339	Distribution Pipe Support Bracket - 2 pipe - Wing	4
16	N66359	Distribution Pipe Clamp - 2 pipe - Wing	4
17	W-187	Hex Bolt - 3/8 x 1 1/4 Lg	44
18	BW-10	Hex Bolt - 3/4 x 1 3/4 Lg	2
19	D-4932	U-Bolt - 3/8 x 4 1/8 x 3 UL	4
20	C-3932	U-Bolt - 1/2 x 4 x 7 1/4 UL	4
21	S39649	U-Bolt - 5/8 x 4 x 7 3/4 UL	2
22	F-4642	U-Bolt - 5/8 x 6 x 5 1/2 UL	2
23	S27987	Locknut - 3/8 Center Lock	52
24	W-516	Nut - 1/2	8
25	W-517	Nut - 5/8	8
26	W-518	Nut - 3/4	2
27	W-525	Lockwasher - 1/2	8
28	W-526	Lockwasher - 5/8	8
29	W-527	Lockwasher - 3/4	2
30	R480034	Hose - .929 ID x 1.169 OD/ft (75 ft roll) . . Prior to 2023	900
	N73085	Hose - 1 ID x 1.250 OD (100 ft roll) - 2023 to 2025	
	N75770	**Hose - 1 ID x 1.250 OD (100 ft roll) - RED (Fertilizer) - 2026 to Present**	
	N75771	**Hose - 1 ID x 1.250 OD (100 ft roll) - BLACK (Seed) - 2026 to Present**	
31	N69294	Hose - 2 1/2 ID x 100 ft roll - **Black** (Air Cart side of couplers) (**Seed**)	250ft
	N72592	Hose - 2 1/2 ID x 100 ft roll - **Red** (Air Cart side of couplers) (**Fertilizer**)	
32	N75812	Hose - 3 ID x 100 ft roll - **Black** - (**Seed**)	300ft
	N75813	Hose - 3 ID x 100 ft roll - **Red** - (**Fertilizer**)	
33	N66396	Primary Pipe SS - 3 x 48 Lg	4
34	N64092	Primary Pipe SS - 3 x 72 Lg	4
35	N64094	Primary Pipe SS - 3 x 96 Lg	12
36	N66358	Distribution Pipe Spacer - 2 pipe - Wing	4
37	**N72719**	**Offset Head Mounting Plate - Main Frame**	**4**
38	N67202	Head Mounting Bracket - 30 Degree - Right (shown)	1
38A	N67200	Head Mounting Bracket - 30 Degree - Left	1
39	W-187	Hex Bolt - 3/8 x 1 1/4 Lg	8

Dual Shoot - Offset Heads - Tow Behind - 2023 to Present
50 ft - 15m - 7 primaries - 10 and 12 inch (250 - 300mm) Spacing

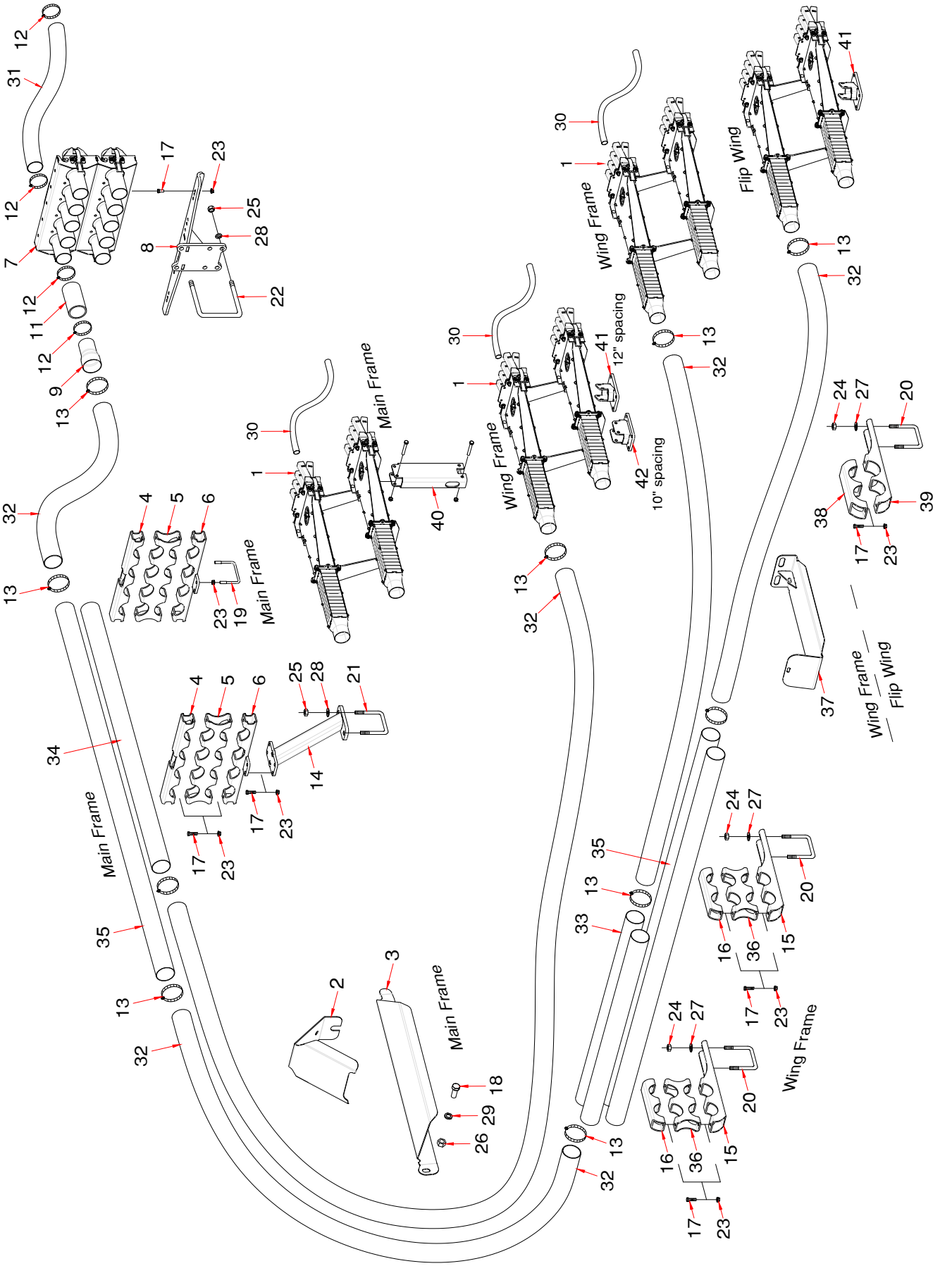

Dual Shoot Offset Heads Tow Behind - 50 ft - 15m - 7 primaries - 2023 to Present

Item	Part No.	Description	Qty
		For 10 and 12 inch - 250mm and 300mm spacing	
1	* * * * *	Divider Head Assembly (Refer to Divider Head Assembly for details)	
		10" spacing uses:	
		N66508 - Divider Head Assembly - 8 Outlet	6
		N66509 - Divider Head Assembly - 9 Outlet	8
		12" spacing uses:	
		N66507 - Divider Head Assembly - 7 Outlet	12
		N66508 - Divider Head Assembly - 8 Outlet	2
2	S67250	Primary Hose Deflector	2
3	S66430	Primary Hose Hose Suport - Main - Left side (shown)	1
	S66435	Primary Hose Hose Suport - Main - Right side	1
4	N66321	Distribution Pipe Clamp - Main	4
5	N66322	Distribution Pipe Spacer - Main	4
6	N66335	Distribution Pipe Clamp Bracket - Main	4
7	* * * * *	Quick Coupler - 5 Run (Refer to Quick Coupler Assembly for details)	4
8	N53203	Coupler Tower - Behind	1
9	N64095	Primary Hose Adapter	28
10	* * * * *		
11	N19428	Hose - 2.54 ID x 2.79 OD x 5 Lg	28
12	N11905	Hose Clamp - 2 1/2 - HC5-44 **(Air Cart side uses 28)**	84
13	N64099	Hose Clamp - 3 - SSTCH5-400 (Range 3 1/8 - 3 3/4)	68
14	N66325	Distribution Pipe Stand - Main	2
15	N66339	Distribution Pipe Support Bracket - 2 pipe - Wing	4
16	N66359	Distribution Pipe Clamp - 2 pipe - Wing	4
17	W-187	Hex Bolt - 3/8 x 1 1/4 Lg	48
18	BW-10	Hex Bolt - 3/4 x 1 3/4 Lg	2
19	D-4932	U-Bolt - 3/8 x 4 1/8 x 3 UL	4
20	C-3932	U-Bolt - 1/2 x 4 x 7 1/4 UL	12
21	S39649	U-Bolt - 5/8 x 4 x 7 3/4 UL	2
22	F-4642	U-Bolt - 5/8 x 6 x 5 1/2 UL	2
23	S27987	Locknut - 3/8 Center Lock	56
24	W-516	Nut - 1/2	24
25	W-517	Nut - 5/8	8
26	W-518	Nut - 3/4	2
27	W-525	Lockwasher - 1/2	24
28	W-526	Lockwasher - 5/8	8
29	W-527	Lockwasher - 3/4	2
30	R480034	Hose - .929 ID x 1.169 OD/ft (75 ft roll) . . 10"SP-1350 ft . . 12"SP-1125 ft . . Prior to 2023	
	N73085	Hose - 1 ID x 1.250 OD (100 ft roll) - 2023 to 2025	
	N75770	**Hose - 1 ID x 1.250 OD (100 ft roll) - RED (Fertilizer) - 2026 to Present**	
	N75771	**Hose - 1 ID x 1.250 OD (100 ft roll) - BLACK (Seed) - 2026 to Present**	
31	N69294	Hose - 2 1/2 ID x 100 ft roll - **Black** (Air Cart side of couplers) (**Seed**)	300ft
	N72592	Hose - 2 1/2 ID x 100 ft roll - **Red** (Air Cart side of couplers) (**Fertilizer**)	
32	N75812	Hose - 3 ID x 100 ft roll - **Black** - (**Seed**)	300ft
	N75813	Hose - 3 ID x 100 ft roll - **Red** - (**Fertilizer**)	
33	N66396	Primary Pipe SS - 3 x 48 Lg	4
34	N64092	Primary Pipe SS - 3 x 72 Lg	4
35	N64094	Primary Pipe SS - 3 x 96 Lg	12
36	N66358	Distribution Pipe Spacer - 2 pipe - Wing	4
37	N67295	Primary Hose Guide Plate - Wing	2
38	N66374	Distribution Hose Clamp - Wing - 3 5/8 Dia	2
39	N66375	Distribution Hose Support Bracket - Wing - 3 5/8 Dia	2
40	S65390	Divider Head Pedestal - Main Frame	1
41	N67202	Head Mounting Bracket - 30 Degree - Right (shown)	1
41A	N67200	Head Mounting Bracket - 30 Degree - Left	1
42	**N67640**	**Head Mounting Bracket - Straight (10 inch spacing)**	**2**

Dual Shoot - Offset Heads - Tow Behind - 2023 to Present
60 ft - 18m - 8 primaries - 10, 12 and 15 inch (250 - 300 - 380mm) Spacing

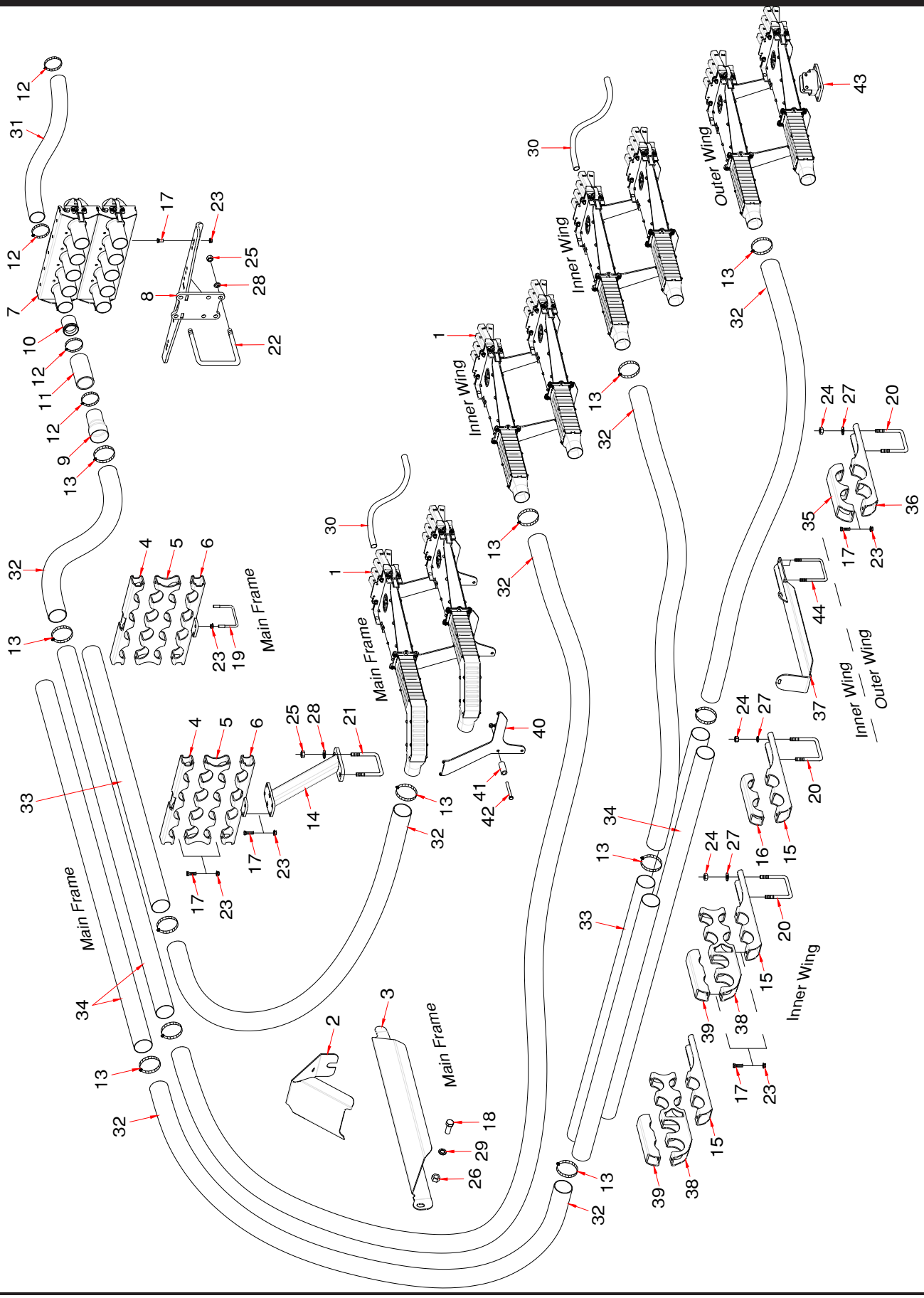

Dual Shoot Offset Heads Tow Behind - 60 ft - 18m - 8 primaries

Item	Part No.	Description	Qty
		For 10, 12 and 15 inch - 250mm, 300mm and 380mm spacing	
1	* * * * *	Divider Head Assembly (Refer to Divider Head Assembly for details)	
		10" spacing uses:	
		N66509 - Divider Head Assembly - 9 Outlet	16
		12" spacing uses:	
		N66507 - Divider Head Assembly - 7 Outlet	8
		N66508 - Divider Head Assembly - 8 Outlet	8
		15" spacing uses 8 # 6 heads	
		N66506 - Divider Head Assembly - 6 Outlet	16
2	S67250	Primary Hose Deflector	2
3	S66430	Primary Hose Hose Suport - Main - Left side (shown)	1
	S66435	Primary Hose Hose Suport - Main - Right side	1
4	N66321	Distribution Pipe Clamp - Main	4
5	N66322	Distribution Pipe Spacer - Main	4
6	N66335	Distribution Pipe Clamp Bracket - Main	4
7	* * * * *	Quick Coupler - 5 Run (Refer to Quick Coupler Assembly for details)	4
8	N53203	Coupler Tower - Behind	1
9	N64095	Primary Hose Adapter	32
10	N37920	Equalizer	0
11	N19428	Hose - 2.54 ID x 2.79 OD x 5 Lg	32
12	N11905	Hose Clamp - 2 1/2 - HC5-44 (Air Cart side uses 32)	96
13	N64099	Hose Clamp - 3 - SSTCH5-400 (Range 3 1/8 - 3 3/4)	80
14	N66325	Distribution Pipe Stand - Main	2
15	N66339	Distribution Pipe Support Bracket - 2 pipe - Wing - Wing	6
16	N66359	Distribution Pipe Clamp - 2 pipe - Wing - Wing	2
17	W-187	Hex Bolt - 3/8 x 1 1/4 Lg	52
18	BW-10	Hex Bolt - 3/4 x 1 3/4 Lg	2
19	D-4932	U-Bolt - 3/8 x 4 1/8 x 3 UL	4
20	C-3932	U-Bolt - 1/2 x 4 x 7 1/4 UL	8
21	S39649	U-Bolt - 5/8 x 4 x 7 3/4 UL	2
22	F-4642	U-Bolt - 5/8 x 6 x 5 1/2 UL	2
23	S27987	Locknut - 3/8 Center Lock	60
24	W-516	Nut - 1/2	16
25	W-517	Nut - 5/8	8
26	W-518	Nut - 3/4	2
27	W-525	Lockwasher - 1/2	16
28	W-526	Lockwasher - 5/8	8
29	W-527	Lockwasher - 3/4	2
30	R480034	Hose - .929 ID x 1.169 OD/ft (75 ft roll) 10"SP-1650 ft . . 12"SP-1350 ft . . 15"SP-1125 ft .	
	N73085	Hose - 1 ID x 1.250 OD (100 ft roll) - 2023 to 2025	
	N75770	**Hose - 1 ID x 1.250 OD (100 ft roll) - RED (Fertilizer) - 2026 to Present**	
	N75771	**Hose - 1 ID x 1.250 OD (100 ft roll) - BLACK (Seed) - 2026 to Present**	
31	N69294	Hose - 2 1/2 ID x 100 ft roll - **Black** (Air Cart side of couplers) (**Seed**)	325ft
	N72592	Hose - 2 1/2 ID x 100 ft roll - **Red** (Air Cart side of couplers) (**Fertilizer**)	
32	N75812	Hose - 3 ID x 100 ft roll - **Black** - (**Seed**)	275ft
	N75813	Hose - 3 ID x 100 ft roll - **Red** - (**Fertilizer**)	
33	N64092	Primary Pipe SS - 3 x 72 Lg	8
34	N64094	Primary Pipe SS - 3 x 96 Lg	16
35	N66374	Distribution Hose Clamp - Wing - 3 5/8 Dia	2
36	N66375	Distribution Hose Support Bracket - Wing - 3 5/8 Dia	2
37	N66395	Primary Hose Guide Plate - Wing	2
38	N66775	Distribution Pipe Spacer - 6 pipe - Wing	4
39	N66855	Distribution Pipe Clamp - 2 pipe - Wing	4
40	**N72719**	**Offset Head Mounting Plate - Main Frame**	**4**
41	N50842	Bushings - .385 ID x 5/8 OD x 3 1/4 Lg	8
42	S-1299	Hex Bolt - 3/8 x 4 1/2 Lg	8
43	N67200	Head Mounting Bracket - 30 Degree - Left (shown)	1
43A	N67202	Head Mounting Bracket - 30 Degree - Right	1
44	N19723	U-Bolt - 3/8 x 4 1/16 x 6 15/16 UL	8

Dual Shoot - Offset Heads - Tow Behind - 2023 to Present
70 ft - 21m - 8 primaries - 10, 12 and 15 inch (250 - 300 - 380mm) Spacing

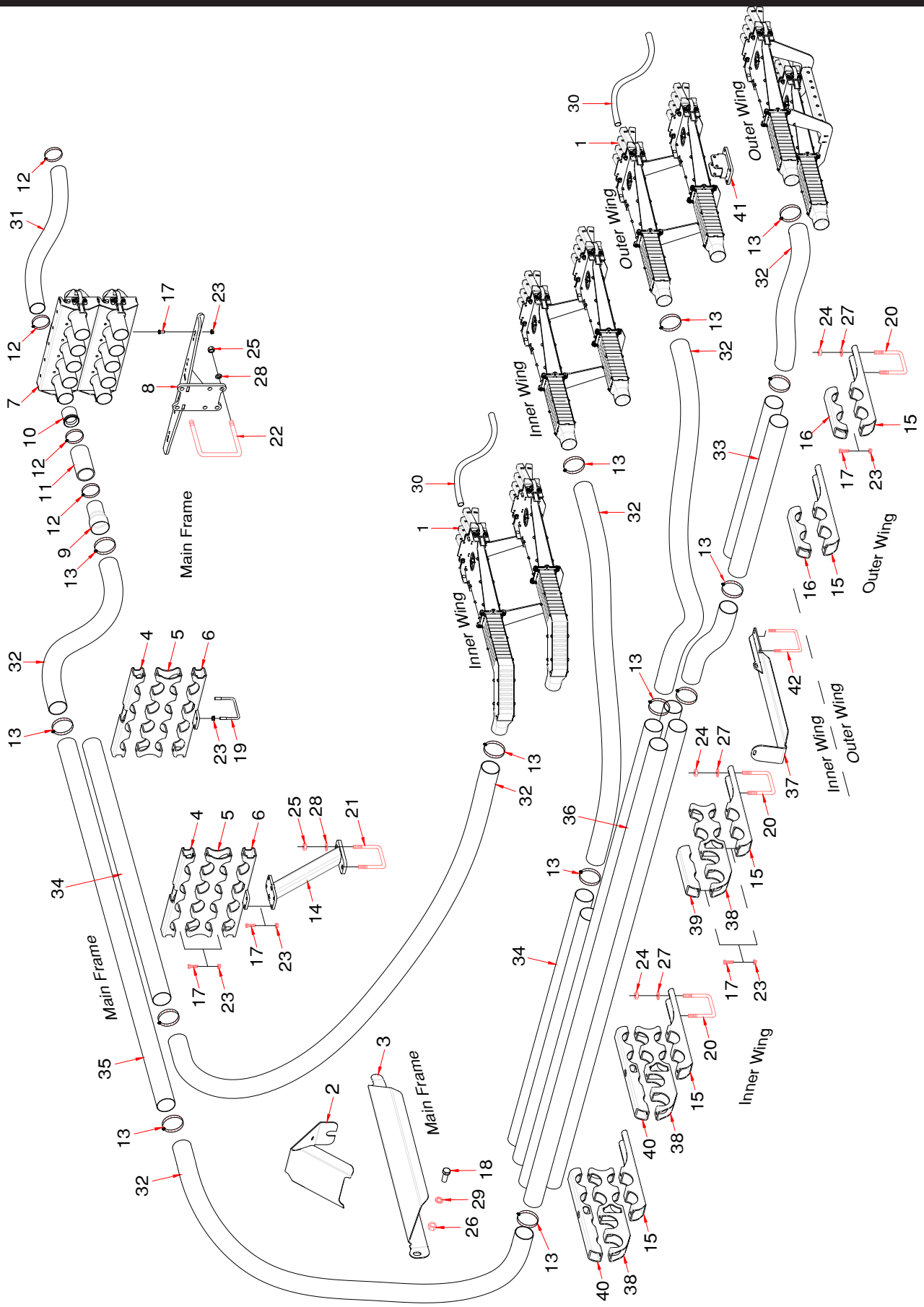

Dual Shoot Offset Heads Tow Behind - 70 ft - 21m - 8 primaries			
Item	**Part No.**	**Description**	**Qty**
		For 10, 12 and 15 inch - 250mm, 300mm and 380mm spacing	
1	* * * * *	Divider Head Assembly (Refer to Divider Head Assembly for details)	
		10" spacing uses: N/A	
		N66510 - Divider Head Assembly - 10 Outlet	8
		* N/A * - Divider Head Assembly - 11 Outlet	8
		12" spacing uses:	
		N66508 - Divider Head Assembly - 8 Outlet	4
		N66509 - Divider Head Assembly - 9 Outlet	12
		15" spacing uses:	
		N66507 - Divider Head Assembly - 7 Outlet	16
2	S67250	Primary Hose Deflector	2
3	S66430	Primary Hose Hose Suport - Main - Left side (shown)	1
	S66435	Primary Hose Hose Suport - Main - Right side	1
4	N66321	Distribution Pipe Clamp - Main	4
5	N66322	Distribution Pipe Spacer - Main	4
6	N66335	Distribution Pipe Clamp Bracket - Main	4
7	* * * * *	Quick Coupler - 5 Run (Refer to Quick Coupler Assembly for details)	4
8	N53203	Coupler Tower - Behind	1
9	N64095	Primary Hose Adapter	16
10	N37920	Equalizer	0
11	N19428	Hose - 2.54 ID x 2.79 OD x 5 Lg	16
12	N11905	Hose Clamp - 2 1/2 - HC5-44 (Air Cart side uses 36)	104
13	N64099	Hose Clamp - 3 - SSTCH5-400 (Range 3 1/8 - 3 3/4)	66
14	N66325	Distribution Pipe Stand - Main	2
15	N66339	Distribution Pipe Support Bracket - Wing	10
16	N66359	Distribution Pipe Clamp - Wing	4
17	W-187	Hex Bolt - 3/8 x 1 1/4 Lg	64
18	BW-10	Hex Bolt - 3/4 x 1 3/4 Lg	2
19	D-4932	U-Bolt - 3/8 x 4 1/8 x 3 UL	4
20	C-3932	U-Bolt - 1/2 x 4 x 7 1/4 UL	10
21	S39649	U-Bolt - 5/8 x 4 x 7 3/4 UL	2
22	F-4642	U-Bolt - 5/8 x 6 x 5 1/2 UL	2
23	S27987	Locknut - 3/8 Center Lock	72
24	W-516	Nut - 1/2	20
25	W-517	Nut - 5/8	8
26	W-518	Nut - 3/4	2
27	W-525	Lockwasher - 1/2	20
28	W-526	Lockwasher - 5/8	8
29	W-527	Lockwasher - 3/4	2
30	R480034	Hose - .929 ID x 1.169 OD/ft (75 ft roll) 10"SP-1875 ft . . 12"SP-1500 ft . . 15"SP-1275 ft.	
	N73085	Hose - 1 ID x 1.250 OD (100 ft roll) - 2023 to 2025	
	N75770	**Hose - 1 ID x 1.250 OD (100 ft roll) - RED (Fertilizer) - 2026 to Present**	
	N75771	**Hose - 1 ID x 1.250 OD (100 ft roll) - BLACK (Seed) - 2026 to Present**	
31	N69294	Hose - 2 1/2 ID x 100 ft roll - **Black** (Air Cart side of couplers) (**Seed**)	375ft
	N72592	Hose - 2 1/2 ID x 100 ft roll - **Red** (Air Cart side of couplers) (**Fertilizer**)	
32	N75812	Hose - 3 ID x 100 ft roll - **Black** - (**Seed**)	350ft
	N75813	Hose - 3 ID x 100 ft roll - **Red** - (**Fertilizer**)	
33	N66396	Primary Pipe SS - 3 x 48 Lg	4
34	N64092	Primary Pipe SS - 3 x 72 Lg	8
35	N64094	Primary Pipe SS - 3 x 96 Lg	12
36	N64096	Primary Pipe SS - 3 x 120 Lg	8
37	N66395	Primary Hose Guide Plate	2
38	N66775	Distribution Pipe Spacer - 6 pipe - Wing	6
39	N66855	Distribution Pipe Clamp - 2 pipe - Wing	2
40	N66860	Distribution Pipe Clamp - 4 pipe - Wing	4
41	N67640	Head Mounting Bracket - Straight	2
42	N19723	U-Bolt - 3/8 x 4 1/16 x 6 15/16 UL	8

Dual Shoot - Offset Heads - Tow Behind - 2023 to Present
70 ft - 21m - 9 primaries - 10, 12 and 15 inch (250 - 300 - 380mm) Spacing

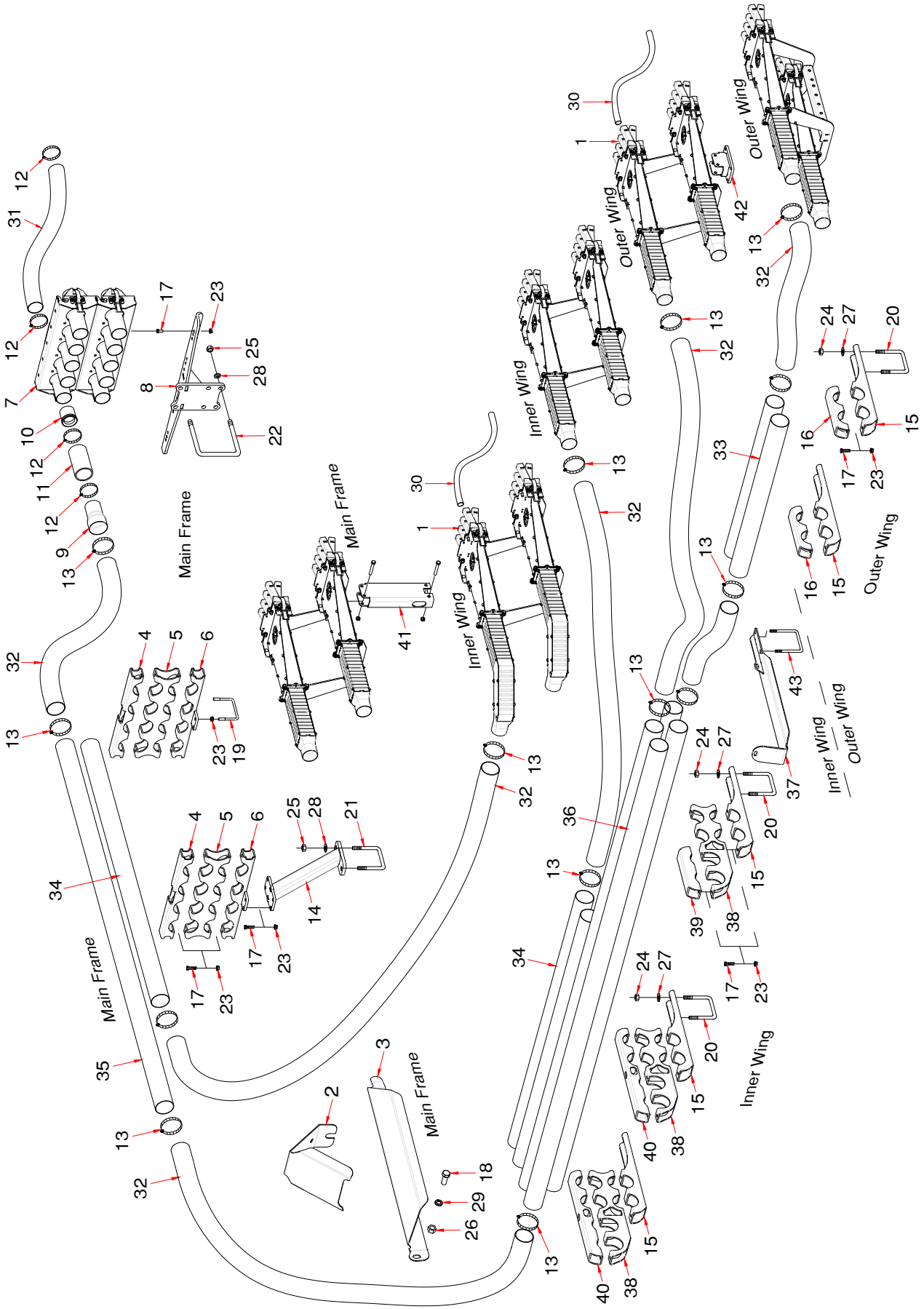

Dual Shoot Offset Heads Tow Behind - 70 ft - 21m - 9 primaries

Item	Part No.	Description	Qty
		For 10, 12 and 15 inch - 250mm, 300mm and 380mm spacing	
1	* * * * *	Divider Head Assembly (Refer to Divider Head Assembly for details)	
		10" spacing uses:	
		N66509 - Divider Head Assembly - 9 Outlet	12
		N66510 - Divider Head Assembly - 10 Outlet	6
		12" spacing uses:	
		N66507 - Divider Head Assembly - 7 Outlet	4
		N66508 - Divider Head Assembly - 8 Outlet	14
		15" spacing uses:	
		N66506 - Divider Head Assembly - 6 Outlet	14
		N66507 - Divider Head Assembly - 7 Outlet	4
2	S67250	Primary Hose Deflector	2
3	S66430	Primary Hose Hose Suport - Main - Left side (shown)	1
	S66435	Primary Hose Hose Suport - Main - Right side	1
4	N66321	Distribution Pipe Clamp - Main	4
5	N66322	Distribution Pipe Spacer - Main	4
6	N66335	Distribution Pipe Clamp Bracket - Main	4
7	* * * * *	Quick Coupler - 5 Run (Refer to Quick Coupler Assembly for details)	4
8	N53203	Coupler Tower - Behind	1
9	N64095	Primary Hose Adapter	36
10	N37920	Equalizer	0
11	N19428	Hose - 2.54 ID x 2.79 OD x 5 Lg	36
12	N11905	Hose Clamp - 2 1/2 - HC5-44 (Air Cart side uses 36)	108
13	N64099	Hose Clamp - 3 - SSTCH5-400 (Range 3 1/8 - 3 3/4)	112
14	N66325	Distribution Pipe Stand - Main	2
15	N66339	Distribution Pipe Support Bracket - Wing	10
16	N66359	Distribution Pipe Clamp - Wing	4
17	W-187	Hex Bolt - 3/8 x 1 1/4 Lg	64
18	BW-10	Hex Bolt - 3/4 x 1 3/4 Lg	2
19	D-4932	U-Bolt - 3/8 x 4 1/8 x 3 UL	4
20	C-3932	U-Bolt - 1/2 x 4 x 7 1/4 UL	10
21	S39649	U-Bolt - 5/8 x 4 x 7 3/4 UL	2
22	F-4642	U-Bolt - 5/8 x 6 x 5 1/2 UL	2
23	S27987	Locknut - 3/8 Center Lock	72
24	W-516	Nut - 1/2	20
25	W-517	Nut - 5/8	8
26	W-518	Nut - 3/4	2
27	W-525	Lockwasher - 1/2	20
28	W-526	Lockwasher - 5/8	8
29	W-527	Lockwasher - 3/4	2
30	R480034	Hose - .929 ID x 1.169 OD/ft (75 ft roll) 10"SP-1875 ft . . 12"SP-1500 ft . . 15"SP-1275 ft.	
	N73085	Hose - 1 ID x 1.250 OD (100 ft roll) - 2023 to 2025	
	N75770	**Hose - 1 ID x 1.250 OD (100 ft roll) - RED (Fertilizer) - 2026 to Present**	
	N75771	**Hose - 1 ID x 1.250 OD (100 ft roll) - BLACK (Seed) - 2026 to Present**	
31	N69294	Hose - 2 1/2 ID x 100 ft roll - **Black** (Air Cart side of couplers) (**Seed**)	375ft
	N72592	Hose - 2 1/2 ID x 100 ft roll - **Red** (Air Cart side of couplers) (**Fertilizer**)	
32	N75812	Hose - 3 ID x 100 ft roll - **Black** - (**Seed**)	350ft
	N75813	Hose - 3 ID x 100 ft roll - **Red** - (**Fertilizer**)	
33	N66396	Primary Pipe SS - 3 x 48 Lg	4
34	N64092	Primary Pipe SS - 3 x 72 Lg	8
35	N64094	Primary Pipe SS - 3 x 96 Lg	12
36	N64096	Primary Pipe SS - 3 x 120 Lg	8
37	N66395	Primary Hose Guide Plate	2
38	N66775	Distribution Pipe Spacer - 6 pipe - Wing	6
39	N66855	Distribution Pipe Clamp - 2 pipe - Wing	2
40	N66860	Distribution Pipe Clamp - 4 pipe - Wing	4
41	S65390	Divider Head Pedestal - Main Frame	1
42	N67640	Head Mounting Bracket - Straight	2
43	N19723	U-Bolt - 3/8 x 4 1/16 x 6 15/16 UL	8

Dual Shoot - Offset Heads - Tow Behind - 2023 to 2024
80 ft - 24m - 10 primaries - 10 and 12 inch (250 - 300) Spacing

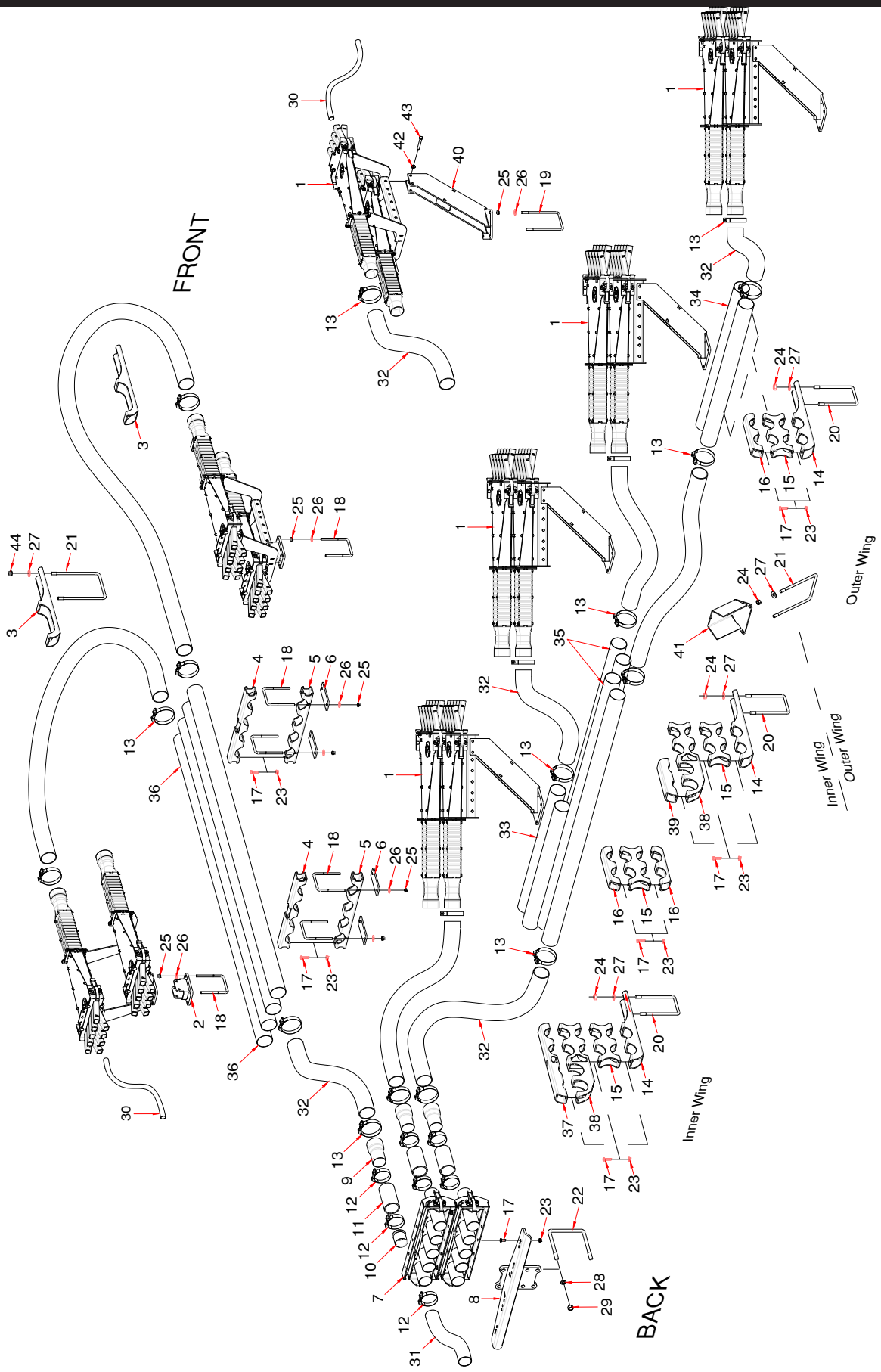

Dual Shoot Offset Heads Tow Behind - 80 ft - 24m - 10 primaries - 2023 to 2024

Item	Part No.	Description	Qty
		For 10 and 12 inch - 250mm and 300mm spacing	
1	* * * * *	Divider Head Assembly (Refer to Divider Head Assembly for details)	
	80ft	**10" spacing uses: 97 runs**	
		N66509 - Divider Head Assembly - 9 Outlet	6
		N66510 - Divider Head Assembly - 10 Outlet	14
	80ft	**12" (3spacing uses: 82 runs**	
		N66508 - Divider Head Assembly - 8 Outlet	16
		N66509 - Divider Head Assembly - 9 Outlet	4
2	N67640	Head Mounting Bracket - Straight	2
3	N72832	Distribution Pipe Support	2
4	N66321	Distribution Pipe Clamp - Main	2
5	N72833	Distribution Pipe Clamp - Front Carriage	2
6	N72834	Clamp Plat - Main	4
7	* * * * *	Quick Coupler - 5 Run (Refer to Quick Coupler Assembly for details)	4
8	N53203	Coupler Tower - Behind	1
9	N64095	Primary Hose Adapter	20
10	N37920	Equalizer	0
11	N19428	Hose - 2.54 ID x 2.79 OD x 5 Lg	20
12	N73068	Hose Clamp -T-Bolt - 2 9/16 - 2 7/8	60
13	N64099	Hose Clamp - 3 - SSTCH5-400 (Range 3 1/8 - 3 3/4)	80
14	N66339	Distribution Pipe Support Bracket - Wing	8
15	N66358	Distribution Pipe Spacer - 2 pipe - Wing	12
16	N66359	Distribution Pipe Clamp - Wing	8
17	W-187	Hex Bolt - 3/8 x 1 1/4 Lg	54
18	N15098	U-Bolt - 3/8 x 4 x 5 UL	8
19	N19723	U-Bolt - 3/8 x 4 1/16 x 6 15/16 UL	16
20	C-3932	U-Bolt - 1/2 x 4 x 7 1/4 UL	8
21	H21437	U-Bolt - 1/2 x 6 x 9 UL	4
22	F-4642	U-Bolt - 5/8 x 6 x 5 1/2 UL	2
23	S27987	Locknut - 3/8 Center Lock	54
24	S47110	Lock Nut - 1/2 Center Lock	20
25	10229	Locknut - 3/8 Nylock	48
26	W-538	Flat Washer - 7/16	48
27	S-766	Flat Washer - 1/2	24
28	W-526	Lockwasher - 5/8	4
29	W-517	Nut - 5/8	4
30	N73085	Hose - 1 ID x 1.250 OD (100 ft roll) - 2023 to 2025	21
	N75770	**Hose - 1 ID x 1.250 OD (100 ft roll) - RED (Fertilizer) - 2026 to Present**	
	N75771	**Hose - 1 ID x 1.250 OD (100 ft roll) - BLACK (Seed) - 2026 to Present**	
31	N69294	Hose - 2 1/2 ID x 100 ft roll - **Black** (Air Cart side of couplers) **(Seed)**	425ft
	N72592	Hose - 2 1/2 ID x 100 ft roll - **Red** (Air Cart side of couplers) (**Fertilizer**)	
32	N75812	Hose - 3 ID x 100 ft roll - **Black** - (**Seed**)	2
	N75813	Hose - 3 ID x 100 ft roll - **Red** - (**Fertilizer**)	2
33	S72398	Primary Pipe SS - 3 x 36 Lg	4
34	N66396	Primary Pipe SS - 3 x 48 Lg	4
35	N64092	Primary Pipe SS - 3 x 72 Lg	8
36	N64094	Primary Pipe SS - 3 x 96 Lg	4
37	N66860	Distribution Pipe Clamp - 4 pipe - Wing	2
38	N66775	Distribution Pipe Spacer - 6 pipe - Wing	4
39	N66855	Distribution Pipe Clamp - 2 pipe - Wing	2
40	S72391	Mount Bracket	8
41	S72979	Hose Guard	2
42	M-3388	Locknut - 3/8 Unitorque	20
43	W-480	Hex Bolt - 3/8 x 2 1/2 Lg	20
44	C26701	Locknut - 1/2 Nylock	4

Dual Shoot - Offset Heads - Tow Behind - 2025
80 ft - 24m - 10 primaries - 10 and 12 inch (250 - 300) Spacing

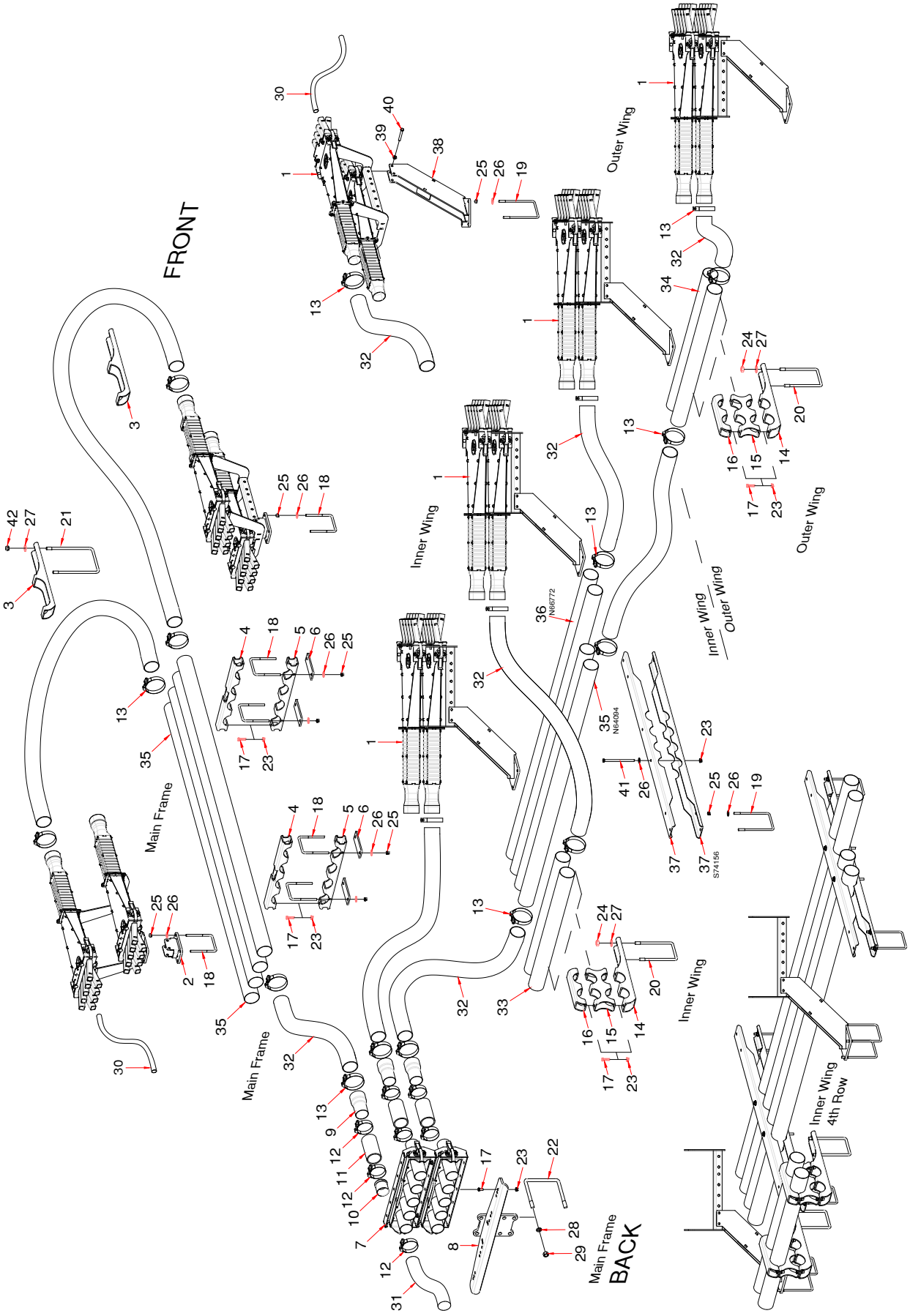

Dual Shoot Offset Heads Tow Behind - 80 ft - 24m - 10 primaries - 2025

Item	Part No.	Description	Qty
		For 10 and 12 inch - 250mm and 300mm spacing	
1	* * * * *	Divider Head Assembly (Refer to Divider Head Assembly for details)	
	80ft	**10" spacing uses: 97 runs**	
		N66509 - Divider Head Assembly - 9 Outlet	6
		N66510 - Divider Head Assembly - 10 Outlet	14
	80ft	**12" (3spacing uses: 82 runs**	
		N66508 - Divider Head Assembly - 8 Outlet	16
		N66509 - Divider Head Assembly - 9 Outlet	4
2	N67640	Head Mounting Bracket - Straight	2
3	N72832	Distribution Pipe Support	2
4	N66321	Distribution Pipe Clamp - Main	2
5	N72833	Distribution Pipe Clamp - Front Carriage	2
6	N72834	Clamp Plat - Main	4
7	* * * * *	Quick Coupler - 5 Run (Refer to Quick Coupler Assembly for details)	4
8	N53203	Coupler Tower - Behind	1
9	N64095	Primary Hose Adapter	20
10	N37920	Equalizer	0
11	N19428	Hose - 2.54 ID x 2.79 OD x 5 Lg	20
12	N73068	Hose Clamp -T-Bolt - 2 9/16 - 2 7/8	60
13	N64099	Hose Clamp - 3 - SSTCH5-400 (Range 3 1/8 - 3 3/4)	80
14	N66339	Distribution Pipe Support Bracket - Wing	8
15	N66358	Distribution Pipe Spacer - 2 pipe - Wing	8
16	N66359	Distribution Pipe Clamp - Wing	8
17	W-187	Hex Bolt - 3/8 x 1 1/4 Lg	36
18	N15098	U-Bolt - 3/8 x 4 x 5 UL	8
19	N19723	U-Bolt - 3/8 x 4 1/16 x 6 15/16 UL	24
20	C-3932	U-Bolt - 1/2 x 4 x 7 1/4 UL	8
21	H21437	U-Bolt - 1/2 x 6 x 9 UL	2
22	C-219	U-Bolt - 5/8 x 4 x 5 9/16 UL	2
23	S27987	Locknut - 3/8 Center Lock	44
24	S47110	Lock Nut - 1/2 Center Lock	16
25	10229	Locknut - 3/8 Nylock	60
26	W-538	Flat Washer - 7/16	60
27	S-766	Flat Washer - 1/2	20
28	W-526	Lockwasher - 5/8	4
29	W-517	Nut - 5/8	4
30	N73085	Hose - 1 ID x 1.250 OD (100 ft roll) - 2023 to 2025	21
	N75770	**Hose - 1 ID x 1.250 OD (100 ft roll) - RED (Fertilizer) - 2026 to Present**	
	N75771	**Hose - 1 ID x 1.250 OD (100 ft roll) - BLACK (Seed) - 2026 to Present**	
31	N69294	Hose - 2 1/2 ID x 100 ft roll - **Black** (Air Cart side of couplers) **(Seed)**	425ft
	N72592	Hose - 2 1/2 ID x 100 ft roll - **Red** (Air Cart side of couplers) (**Fertilizer**)	
32	N75812	Hose - 3 ID x 100 ft roll - **Black** - (**Seed**)	2
	N75813	Hose - 3 ID x 100 ft roll - **Red** - (**Fertilizer**)	2
33	S72398	Primary Pipe SS - 3 x 36 Lg	4
34	N66396	Primary Pipe SS - 3 x 48 Lg	4
35	N64094	Primary Pipe SS - 3 x 96 Lg	8
36	N66772	Primary Pipe SS - 3 x 108 Lg	4
37	S74156	Mount Bracket	8
38	S72391	Mount Bracket	8
39	M-3388	Locknut - 3/8 Unitorque	20
40	W-480	Hex Bolt - 3/8 x 2 1/2 Lg	20
41	C-3918	Hex Bolt - 3/8 x 5 Lg	8
42	C26701	Locknut - 1/2 Nylock	4

Dual Shoot - Offset Heads - Tow Behind - 2026 to Present
80 ft - 24m - 10 primaries - 10 and 12 inch (250 - 300) Spacing

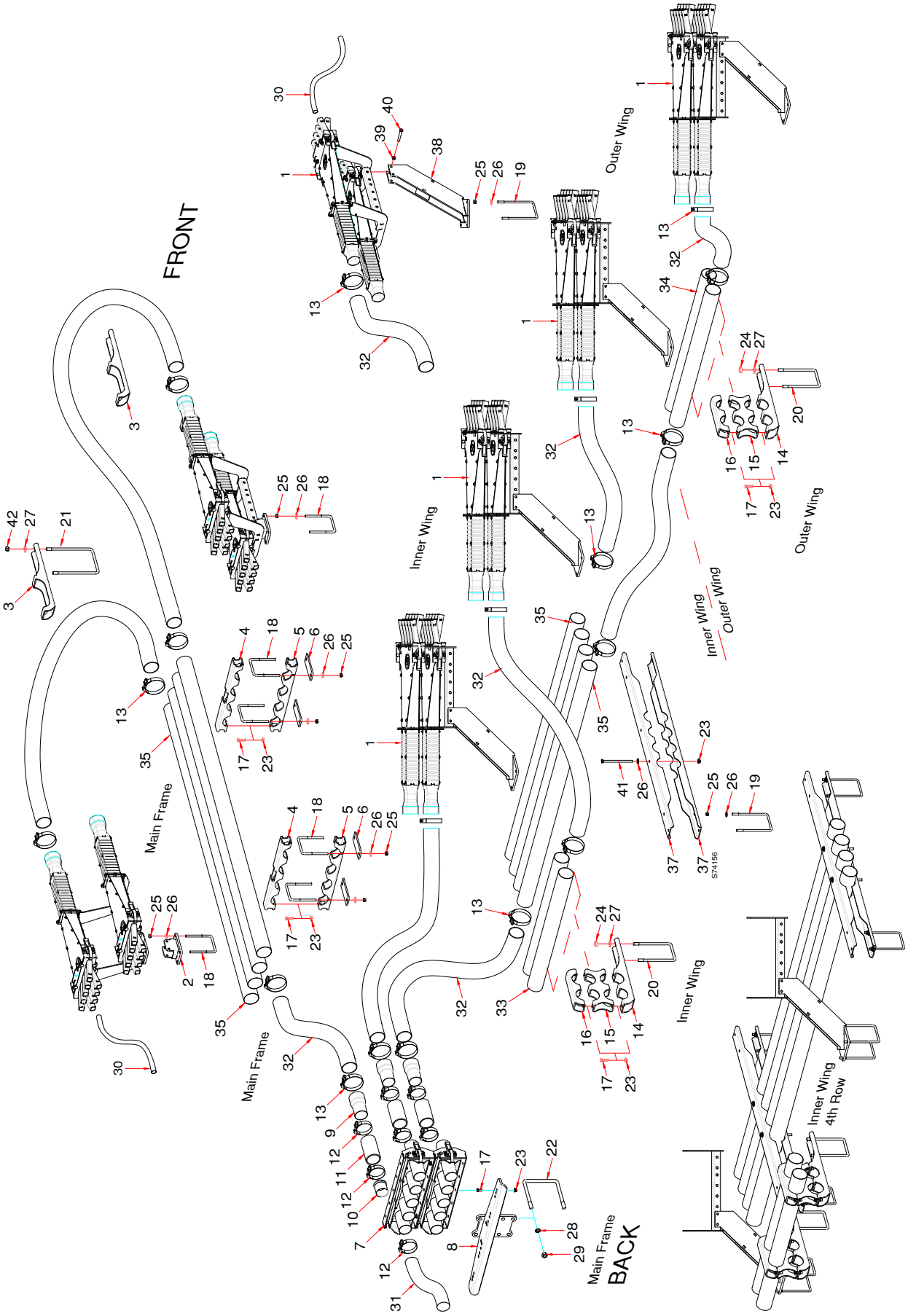

Dual Shoot Offset Heads Tow Behind - 80 ft - 24m - 10 primaries - 2026 to Present

Item	Part No.	Description	Qty
		For 10 and 12 inch - 250mm and 300mm spacing	
1	* * * * *	Divider Head Assembly (Refer to Divider Head Assembly for details)	
	80ft	**10" spacing uses: 97 runs**	
		N66509 - Divider Head Assembly - 9 Outlet	6
		N66510 - Divider Head Assembly - 10 Outlet	14
	80ft	**12" (3spacing uses: 82 runs**	
		N66508 - Divider Head Assembly - 8 Outlet	16
		N66509 - Divider Head Assembly - 9 Outlet	4
2	N67640	Head Mounting Bracket - Straight	2
3	N72832	Distribution Pipe Support	2
4	N66321	Distribution Pipe Clamp - Main	2
5	N72833	Distribution Pipe Clamp - Front Carriage	2
6	N72834	Clamp Plat - Main	4
7	* * * * *	Quick Coupler - 5 Run (Refer to Quick Coupler Assembly for details)	4
8	N53203	Coupler Tower - Behind	1
9	N64095	Primary Hose Adapter	20
10	N37920	Equalizer	0
11	N19428	Hose - 2.54 ID x 2.79 OD x 5 Lg	20
12	N73068	Hose Clamp -T-Bolt - 2 9/16 - 2 7/8	60
13	N64099	Hose Clamp - 3 - SSTCH5-400 (Range 3 1/8 - 3 3/4)	80
14	N66339	Distribution Pipe Support Bracket - Wing	8
15	N66358	Distribution Pipe Spacer - 2 pipe - Wing	8
16	N66359	Distribution Pipe Clamp - Wing	8
17	W-187	Hex Bolt - 3/8 x 1 1/4 Lg	36
18	N15098	U-Bolt - 3/8 x 4 x 5 UL	8
19	N19723	U-Bolt - 3/8 x 4 1/16 x 6 15/16 UL	24
20	C-3932	U-Bolt - 1/2 x 4 x 7 1/4 UL	8
21	H21437	U-Bolt - 1/2 x 6 x 9 UL	2
22	C-219	U-Bolt - 5/8 x 4 x 5 9/16 UL	2
23	S27987	Locknut - 3/8 Center Lock	44
24	S47110	Lock Nut - 1/2 Center Lock	16
25	10229	Locknut - 3/8 Nylock	60
26	W-538	Flat Washer - 7/16	60
27	S-766	Flat Washer - 1/2	20
28	W-526	Lockwasher - 5/8	4
29	W-517	Nut - 5/8	4
30	N73085	Hose - 1 ID x 1.250 OD (100 ft roll) - 2023 to 2025	21
	N75770	**Hose - 1 ID x 1.250 OD (100 ft roll) - RED (Fertilizer) - 2026 to Present**	
	N75771	**Hose - 1 ID x 1.250 OD (100 ft roll) - BLACK (Seed) - 2026 to Present**	
31	N69294	Hose - 2 1/2 ID x 100 ft roll - **Black** (Air Cart side of couplers) **(Seed)**	425ft
	N72592	Hose - 2 1/2 ID x 100 ft roll - **Red** (Air Cart side of couplers) (**Fertilizer**)	
32	N75812	Hose - 3 ID x 100 ft roll - **Black** - (**Seed**)	2
	N75813	Hose - 3 ID x 100 ft roll - **Red** - (**Fertilizer**)	2
33	S72398	Primary Pipe SS - 3 x 36 Lg	4
34	N66396	Primary Pipe SS - 3 x 48 Lg	4
35	N64094	Primary Pipe SS - 3 x 96 Lg	12
36	* * * * *		
37	S74156	Mount Bracket	8
38	S72391	Mount Bracket	8
39	M-3388	Locknut - 3/8 Unitorque	20
40	W-480	Hex Bolt - 3/8 x 2 1/2 Lg	20
41	C-3918	Hex Bolt - 3/8 x 5 Lg	8
42	C26701	Locknut - 1/2 Nylock	4

Dual Shoot - Offset Heads - Tow Between - 2023 to Present
40 ft - 12m - 5 primaries - 12 and 15 inch (300 - 380mm) Spacing

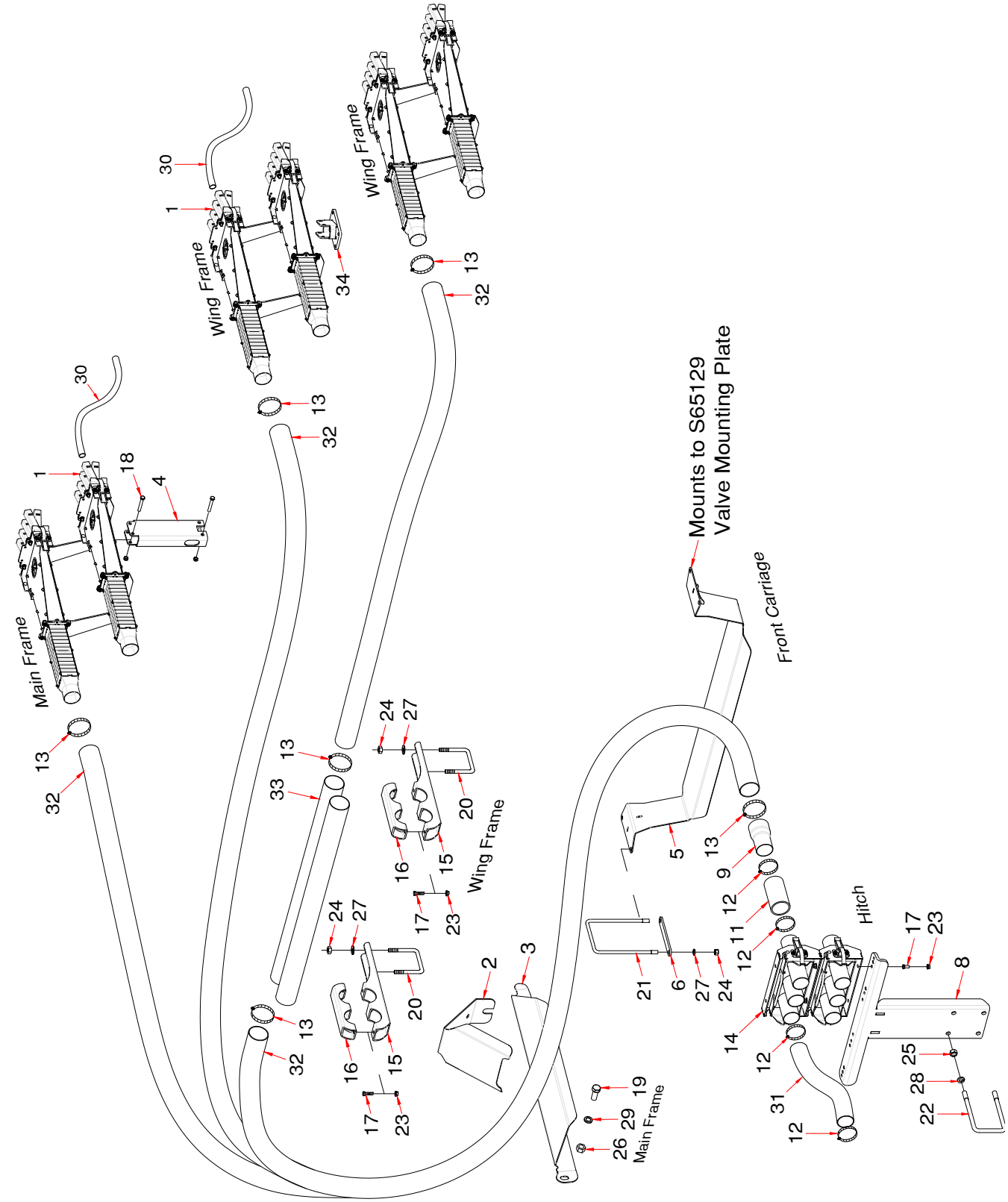

Dual Shoot Offset Heads Tow Between - 40 ft - 12m - 5 primaries - 2023 to Present

Item	Part No.	Description	Qty
		For 12 and 15 inch - 300mm and 380mm spacing	
1	* * * * *	Divider Head Assembly (Refer to Divider Head Assembly for details)	
		12" spacing uses:	
		N66508 - Divider Head Assembly - 8 Outlet	10
		15" spacing uses:	
		N66506 - Divider Head Assembly - 6 Outlet	6
		N66507 - Divider Head Assembly - 7 Outlet	4
2	S67250	Primary Hose Deflector	2
3	S66430	Primary Hose Hose Suport - Main - Left side (shown)	1
	S66435	Primary Hose Hose Suport - Main - Right side	1
4	S65390	Divider Head Pedestal - Main Frame	1
5	N67245	Primary Hose Hose Suport - Between	1
6	N67274	Spacer Plate	1
7	N67275	Kit - Primary Hose Hose Suport - Between (Includes items 5, 6, 21, 24 and 27)	
8	N51962	Coupler Tower - Between	1
9	N64095	Primary Hose Adapter	20
10	* * * * *		
11	N19428	Hose - 2.54 ID x 2.79 OD x 5 Lg	20
12	N11905	Hose Clamp - 2 1/2 - HC5-44 (Air Cart side uses 20)	60
13	N64099	Hose Clamp - 3 - SSTCH5-400 (Range 3 1/8 - 3 3/4)	28
14	* * * * *	Quick Coupler - 5 Run (Refer to Quick Coupler Assembly for details)	2
15	N66339	Distribution Pipe Support Bracket - 2 pipe - Wing	4
16	N66359	Distribution Pipe Clamp - 2 pipe - Wing	4
17	W-187	Hex Bolt - 3/8 x 1 1/4 Lg.	12
18	W-480	Hex Bolt - 3/8 x 2 1/2 Lg (Refer to Divider Head Assembly for details)	2
19	BW-10	Hex Bolt - 3/4 x 1 3/4 Lg.	2
20	C-3932	U-Bolt - 1/2 x 4 x 7 1/4 UL	4
21	H25628	U-Bolt - 1/2 x 6 1/16 x 9 3/8 UL	1
22	S39649	U-Bolt - 5/8 x 4 x 7 3/4 UL	2
23	S27987	Locknut - 3/8 Center Lock	12
24	W-516	Nut - 1/2	6
25	W-517	Nut - 5/8	4
26	W-518	Nut - 3/4	2
27	W-525	Lockwasher - 1/2	6
28	W-526	Lockwasher - 5/8	4
29	W-527	Lockwasher - 3/4	2
30	R480034	Hose - .929 ID x 1.169 OD/ft (75 ft roll) . . 12"SP-900 ft . . 15"SP-750 ft . . Prior to 2023	
	N73085	Hose - 1 ID x 1.250 OD (100 ft roll) - 2023 to 2025	
	N75770	**Hose - 1 ID x 1.250 OD (100 ft roll) - RED (Fertilizer) - 2026 to Present**	
	N75771	**Hose - 1 ID x 1.250 OD (100 ft roll) - BLACK (Seed) - 2026 to Present**	
31	N69294	Hose - 2 1/2 ID x 100 ft roll - **Black** (Air Cart side of couplers) (**Seed**)	140ft
	N72592	Hose - 2 1/2 ID x 100 ft roll - **Red** (Air Cart side of couplers) (**Fertilizer**)	
32	N75812	Hose - 3 ID x 100 ft roll - **Black** - (**Seed**)	200ft
	N75813	Hose - 3 ID x 100 ft roll - **Red** - (**Fertilizer**)	
33	N66396	Primary Pipe SS - 3 x 48 Lg	4
34	N67202	Head Mounting Bracket - 30 Degree - Right (shown)	1
34A	N67200	Head Mounting Bracket - 30 Degree - Left	1
35	**N66141**	**Dual Head Mounting Plate High Profile - 5**	**2**

Dual Shoot - Offset Heads - Tow Between - 2023 to Present
40 ft - 12m - 6 primaries - 10 inch (250mm) Spacing

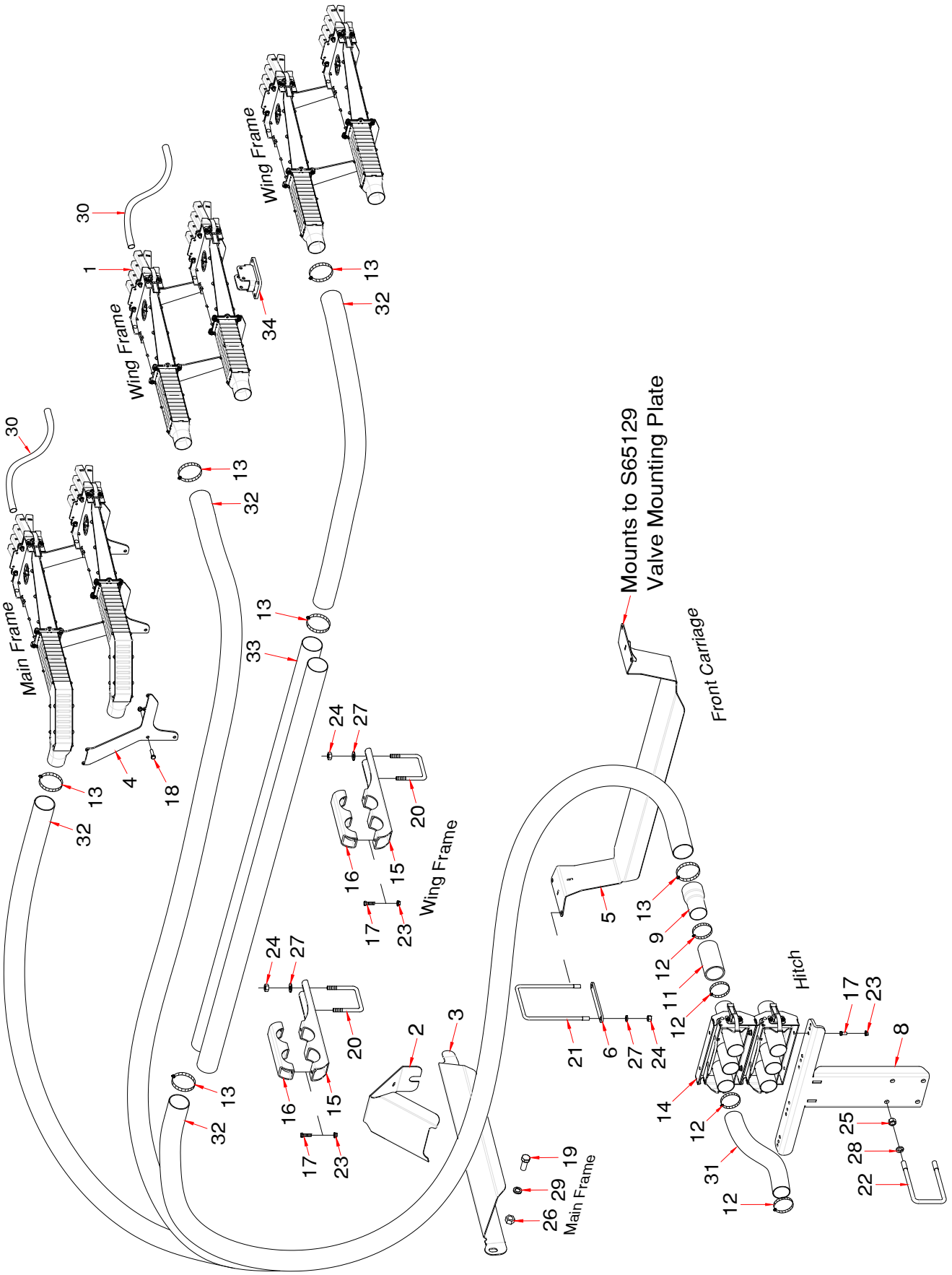

Dual Shoot Offset Heads Tow Between - 40 ft - 12m - 6 primaries - 2023 to Present

Item	Part No.	Description	Qty
		For 10 - 250mm spacing	
1	* * * * *	Divider Head Assembly (Refer to Divider Head Assembly for details)	
		10" spacing uses:	
		N66508 - Divider Head Assembly - 8 Outlet	12
2	S67250	Primary Hose Deflector	2
3	S66430	Primary Hose Hose Suport - Main - Left side (shown)	1
	S66435	Primary Hose Hose Suport - Main - Right side	1
4	**N72719**	**Offset Head Mounting Plate - Main Frame**	**4**
5	N67245	Primary Hose Hose Suport - Between	1
6	N67274	Spacer Plate	1
7	N67275	Kit - Primary Hose Hose Suport - Between (Includes items 5, 6, 21, 24 and 27)	
8	N51962	Coupler Tower - Between	1
9	N64095	Primary Hose Adapter	12
10	* * * * *		
11	N19428	Hose - 2.54 ID x 2.79 OD x 5 Lg	12
12	N11905	Hose Clamp - 2 1/2 - HC5-44 (Air Cart side uses 24)	72
13	N64099	Hose Clamp - 3 - SSTCH5-400 (Range 3 1/8 - 3 3/4)	32
14	* * * * *	Quick Coupler - 3 Run (Refer to Quick Coupler Assembly for details)	4
15	N66339	Distribution Pipe Support Bracket - 2 pipe - Wing	4
16	N66359	Distribution Pipe Clamp - 2 pipe - Wing	4
17	W-187	Hex Bolt - 3/8 x 1 1/4 Lg	12
18	W-187	Hex Bolt - 3/8 x 1 1/4 Lg (Refer to Divider Head Assembly for details)	8
19	BW-10	Hex Bolt - 3/4 x 1 3/4 Lg	2
20	C-3932	U-Bolt - 1/2 x 4 x 7 1/4 UL	4
21	H25628	U-Bolt - 1/2 x 6 1/16 x 9 3/8 UL	1
22	S39649	U-Bolt - 5/8 x 4 x 7 3/4 UL	2
23	S27987	Locknut - 3/8 Center Lock	12
24	W-516	Nut - 1/2	6
25	W-517	Nut - 5/8	4
26	W-518	Nut - 3/4	2
27	W-525	Lockwasher - 1/2	6
28	W-526	Lockwasher - 5/8	4
29	W-527	Lockwasher - 3/4	2
30	R480034	Hose - .929 ID x 1.169 OD/ft (75 ft roll) . . 10"SP-1125 ft . . Prior to 2023	1125
	N73085	Hose - 1 ID x 1.250 OD (100 ft roll) - 2023 to 2025	
	N75770	**Hose - 1 ID x 1.250 OD (100 ft roll) - RED (Fertilizer) - 2026 to Present**	
	N75771	**Hose - 1 ID x 1.250 OD (100 ft roll) - BLACK (Seed) - 2026 to Present**	
31	N69294	Hose - 2 1/2 ID x 100 ft roll - **Black** (Air Cart side of couplers) (**Seed**)	175ft
	N72592	Hose - 2 1/2 ID x 100 ft roll - **Red** (Air Cart side of couplers) (**Fertilizer**)	
32	N75812	Hose - 3 ID x 100 ft roll - **Black** - (**Seed**)	225ft
	N75813	Hose - 3 ID x 100 ft roll - **Red** - (**Fertilizer**)	
33	N64094	Primary Pipe SS - 3 x 96 Lg	4
34	**N67640**	**Head Mounting Bracket - Straight**	**1**

Dual Shoot - Offset Heads - Tow Between - 2023 to Present
50 ft - 15m - 6 primaries - 15 inch (380mm) Spacing

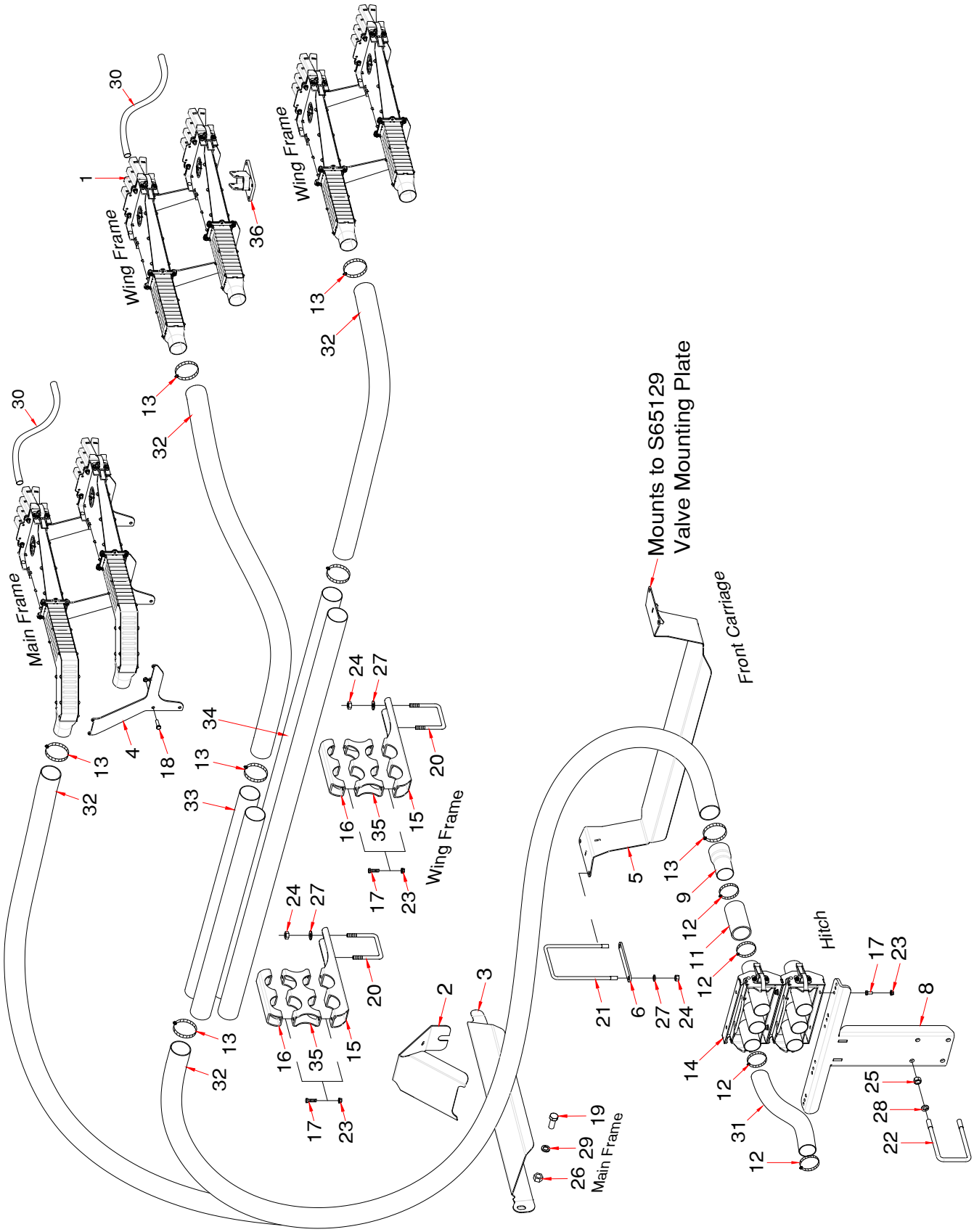

Dual Shoot Offset Heads Tow Between - 50 ft - 15m - 6 primaries - 2023 to Present

Item	Part No.	Description	Qty
		For 15 inch - 380mm spacing	
1	* * * * *	Divider Head Assembly (Refer to Divider Head Assembly for details)	
		15" spacing uses:	
		N66506 - Divider Head Assembly - 6 Outlet	4
		N66507 - Divider Head Assembly - 7 Outlet	8
2	S67250	Primary Hose Deflector	2
3	S66430	Primary Hose Hose Suport - Main - Left side (shown)	1
	S66435	Primary Hose Hose Suport - Main - Right side	1
4	**N72719**	**Offset Head Mounting Plate - Main Frame**	**4**
5	N67245	Primary Hose Hose Suport - Between	1
6	N67274	Spacer Plate	1
7	N67275	Kit - Primary Hose Hose Suport - Between (Includes items 5, 6, 21, 24 and 27)	
8	N51962	Coupler Tower - Between	1
9	N64095	Primary Hose Adapter	12
10	* * * * *		
11	N19428	Hose - 2.54 ID x 2.79 OD x 5 Lg	12
12	N11905	Hose Clamp - 2 1/2 - HC5-44 (Air Cart side uses 24)	72
13	N64099	Hose Clamp - 3 - SSTCH5-400 (Range 3 1/8 - 3 3/4)	40
14	* * * * *	Quick Coupler - 3 Run (Refer to Quick Coupler Assembly for details)	4
15	N66339	Distribution Pipe Support Bracket - 2 pipe - Wing	4
16	N66359	Distribution Pipe Clamp - 2 pipe - Wing	4
17	W-187	Hex Bolt - 3/8 x 1 1/4 Lg.	20
18	W-187	Hex Bolt - 3/8 x 1 1/4 Lg (Refer to Divider Head Assembly for details)	8
19	BW-10	Hex Bolt - 3/4 x 1 3/4 Lg.	2
20	C-3932	U-Bolt - 1/2 x 4 x 7 1/4 UL	4
21	H25628	U-Bolt - 1/2 x 6 1/16 x 9 3/8 UL	1
22	S39649	U-Bolt - 5/8 x 4 x 7 3/4 UL	2
23	S27987	Locknut - 3/8 Center Lock	20
24	W-516	Nut - 1/2	6
25	W-517	Nut - 5/8	4
26	W-518	Nut - 3/4	2
27	W-525	Lockwasher - 1/2	6
28	W-526	Lockwasher - 5/8	4
29	W-527	Lockwasher - 3/4	2
30	R480034	Hose - .929 ID x 1.169 OD/ft (75 ft roll) . . Prior to 2023	900
	N73085	Hose - 1 ID x 1.250 OD (100 ft roll) - 2023 to 2025	
	N75770	**Hose - 1 ID x 1.250 OD (100 ft roll) - RED (Fertilizer) - 2026 to Present**	
	N75771	**Hose - 1 ID x 1.250 OD (100 ft roll) - BLACK (Seed) - 2026 to Present**	
31	N69294	Hose - 2 1/2 ID x 100 ft roll - **Black** (Air Cart side of couplers) (**Seed**)	175ft
	N72592	Hose - 2 1/2 ID x 100 ft roll - **Red** (Air Cart side of couplers) (**Fertilizer**)	
32	N75812	Hose - 3 ID x 100 ft roll - **Black** - (**Seed**)	225ft
	N75813	Hose - 3 ID x 100 ft roll - **Red** - (**Fertilizer**)	
33	N66396	Primary Pipe SS - 3 x 48 Lg	4
34	N64094	Primary Pipe SS - 3 x 96 Lg	4
35	N66358	Distribution Pipe Spacer - 2 pipe - Wing	4
36	N67202	Head Mounting Bracket - 30 Degree - Right (shown)	1
36A	N67200	Head Mounting Bracket - 30 Degree - Left	1

Dual Shoot - Offset Heads - Tow Between - 2023 to Present
50 ft - 15m - 7 primaries - 10 and 12 inch (250 - 300mm) Spacing

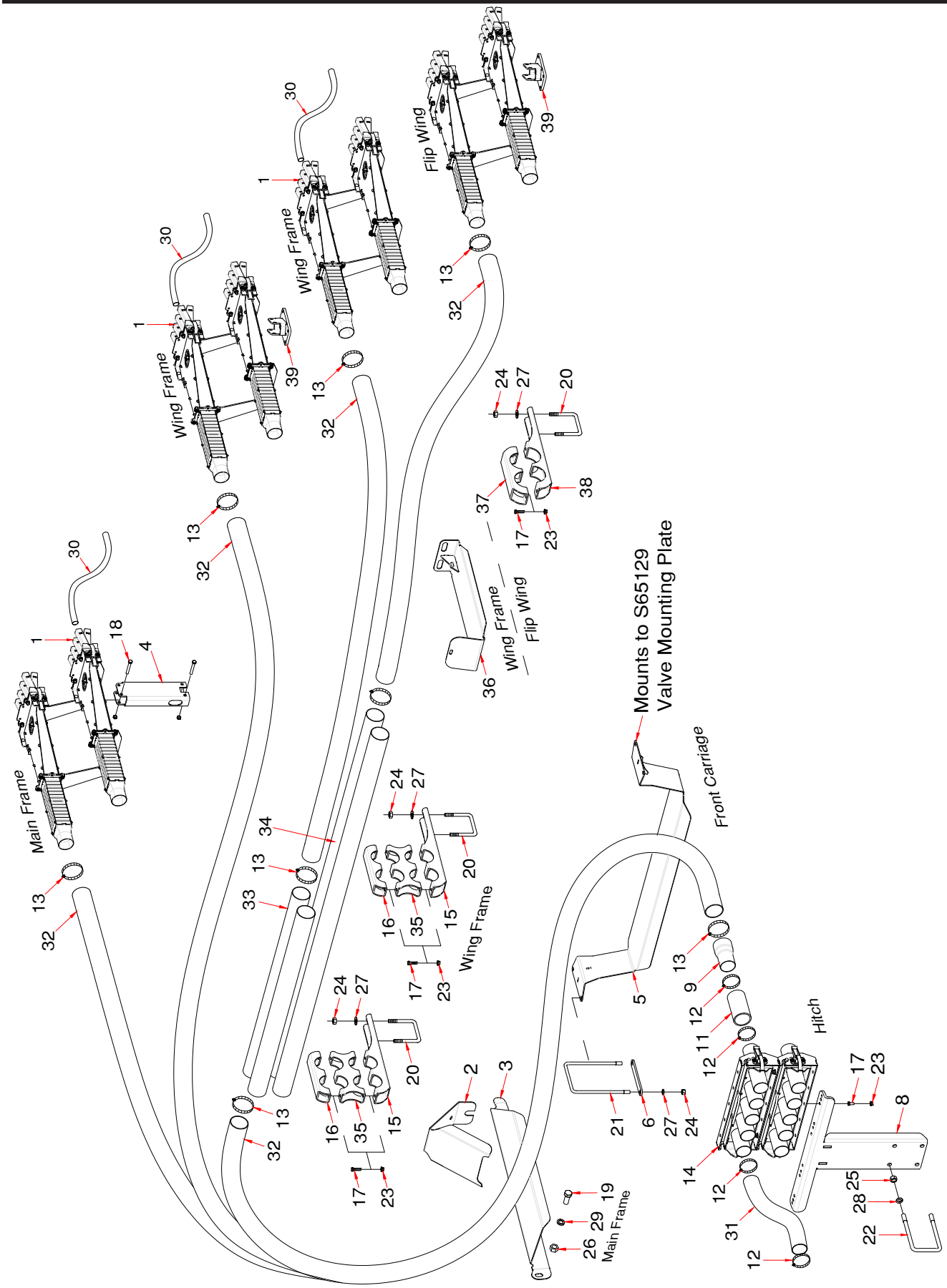

Dual Shoot Offset Heads Tow Between - 50 ft - 15m - 7 primaries - 2023 to Present

Item	Part No.	Description	Qty
		For 10 and 12 inch - 250mm and 300mm spacing	
1	* * * * *	Divider Head Assembly (Refer to Divider Head Assembly for details)	
		10" spacing uses:	
		N66508 - Divider Head Assembly - 8 Outlet	6
		N66509 - Divider Head Assembly - 9 Outlet	8
		12" spacing uses:	
		N66507 - Divider Head Assembly - 7 Outlet	12
		N66508 - Divider Head Assembly - 8 Outlet	2
2	S67250	Primary Hose Deflector	2
3	S66430	Primary Hose Hose Suport - Main - Left side (shown)	1
	S66435	Primary Hose Hose Suport - Main - Right side	1
4	S65390	Divider Head Pedestal - Main Frame	1
5	N67245	Primary Hose Hose Suport - Between	1
6	N67274	Spacer Plate	1
7	N67275	Kit - Primary Hose Hose Suport - Between (Includes items 5, 6, 21, 24 and 27)	
8	N51962	Coupler Tower - Between	1
9	N64095	Primary Hose Adapter	14
10	* * * * *		
11	N19428	Hose - 2.54 ID x 2.79 OD x 5 Lg	14
12	N11905	Hose Clamp - 2 1/2 - HC5-44 (Air Cart side uses 28)	84
13	N64099	Hose Clamp - 3 - SSTCH5-400 (Range 3 1/8 - 3 3/4)	44
14	* * * * *	Quick Coupler - 5 Run (Refer to Quick Coupler Assembly for details)	4
15	N66339	Distribution Pipe Support Bracket - 2 pipe - Wing	4
16	N66359	Distribution Pipe Clamp - 2 pipe - Wing	4
17	W-187	Hex Bolt - 3/8 x 1 1/4 Lg	24
18	W-480	Hex Bolt - 3/8 x 2 1/2 Lg (Refer to Divider Head Assembly for details)	2
19	BW-10	Hex Bolt - 3/4 x 1 3/4 Lg	2
20	C-3932	U-Bolt - 1/2 x 4 x 7 1/4 UL	6
21	H25628	U-Bolt - 1/2 x 6 1/16 x 9 3/8 UL	1
22	S39649	U-Bolt - 5/8 x 4 x 7 3/4 UL	2
23	S27987	Locknut - 3/8 Center Lock	24
24	W-516	Nut - 1/2	14
25	W-517	Nut - 5/8	4
26	W-518	Nut - 3/4	2
27	W-525	Lockwasher - 1/2	14
28	W-526	Lockwasher - 5/8	4
29	W-527	Lockwasher - 3/4	2
30	R480034	Hose - .929 ID x 1.169 OD/ft (75 ft roll) 10"SP-1350 ft . . 12"SP-1125 ft . . Prior to 2023	
	N73085	Hose - 1 ID x 1.250 OD (100 ft roll) - 2023 to 2025	
	N75770	**Hose - 1 ID x 1.250 OD (100 ft roll) - RED (Fertilizer) - 2026 to Present**	
	N75771	**Hose - 1 ID x 1.250 OD (100 ft roll) - BLACK (Seed) - 2026 to Present**	
31	N69294	Hose - 2 1/2 ID x 100 ft roll - **Black** (Air Cart side of couplers) (**Seed**)	200ft
	N72592	Hose - 2 1/2 ID x 100 ft roll - **Red** (Air Cart side of couplers) (**Fertilizer**)	
32	N75812	Hose - 3 ID x 100 ft roll - **Black** - (**Seed**)	300ft
	N75813	Hose - 3 ID x 100 ft roll - **Red** - (**Fertilizer**)	
33	N66396	Primary Pipe SS - 3 x 48 Lg	4
34	N64094	Primary Pipe SS - 3 x 96 Lg	4
35	N66358	Distribution Pipe Spacer - 2 pipe - Wing	4
36	N67295	Primary Hose Guide Plate - Wing	2
37	N66374	Distribution Hose Clamp - Wing - 3 5/8 Dia	2
38	N66375	Distribution Hose Support Bracket - Wing - 3 5/8 Dia	2
39	N67202	Head Mounting Bracket - 30 Degree - Right (shown)	2
39A	N67200	Head Mounting Bracket - 30 Degree - Left	2

Dual Shoot - Offset Heads - Tow Between - 2023 to Present
60 ft - 18m - 8 primaries - 10, 12 and 15 inch (250 - 300 - 380mm) Spacing

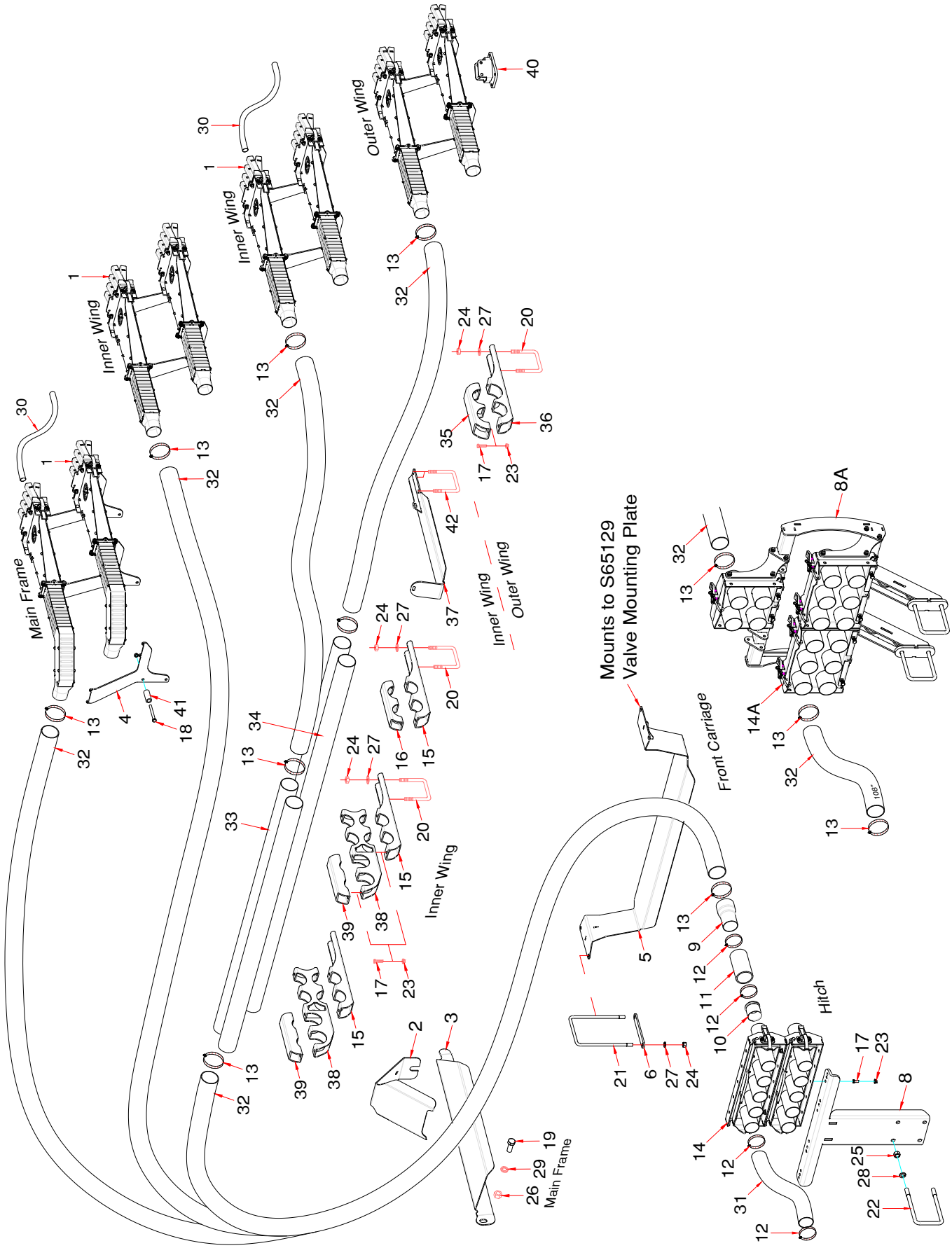

Dual Shoot Offset Heads Tow Between - 60 ft - 18m - 8 primaries - 2023 to Present

Item	Part No.	Description	Qty
		For 10, 12 and 15 inch - 250mm, 300mm and 380mm spacing	
1	* * * * *	Divider Head Assembly (Refer to Divider Head Assembly for details)	
		10" spacing uses:	
		N66509 - Divider Head Assembly - 9 Outlet	16
		12" spacing uses:	
		N66507 - Divider Head Assembly - 7 Outlet	8
		N66508 - Divider Head Assembly - 8 Outlet	8
		15" spacing uses 8 # 6 heads	
		N66506 - Divider Head Assembly - 6 Outlet	16
2	S67250	Primary Hose Deflector	2
3	S66430	Primary Hose Hose Suport - Main - Left side (shown)	1
	S66435	Primary Hose Hose Suport - Main - Right side	1
4	**N72719**	**Offset Head Mounting Plate - Main Frame**	**4**
5	N67245	Primary Hose Hose Suport - Between	1
6	N67274	Spacer Plate	1
7	N67275	Kit - Primary Hose Hose Suport - Between (Includes items 5, 6, 21, 24 and 27)	
8	N51962	Coupler Tower - Between - Cart with 2 1/2" Collectors	1
8A	N75945	Coupler Bracket - Between - Cart with 3" Collectors	1
9	N64095	Primary Hose Adapter	16
10	N37920	Equalizer	0
11	N19428	Hose - 2.54 ID x 2.79 OD x 5 Lg	16
12	N11905	Hose Clamp - 2 1/2 - HC5-44 (Air Cart side uses 32)	96
13	N64099	Hose Clamp - 3 - SSTCH5-400 (Range 3 1/8 - 3 3/4)	48
14	* * * * *	2 1/2 Quick Coupler - (Refer to Quick Coupler Assembly for details)	4
14A	* * * * *	3 Quick Coupler - (Refer to Quick Coupler Assembly for details)	
15	N66339	Distribution Pipe Support Bracket - 2 pipe - Wing - Wing	6
16	N66359	Distribution Pipe Clamp - 2 pipe - Wing - Wing	2
17	W-187	Hex Bolt - 3/8 x 1 1/4 Lg	28
18	S-1299	Hex Bolt - 3/8 x 4 1/2 Lg (Refer to Divider Head Assembly for details)	8
19	BW-10	Hex Bolt - 3/4 x 1 3/4 Lg	2
20	C-3932	U-Bolt - 1/2 x 4 x 7 1/4 UL	8
21	H25628	U-Bolt - 1/2 x 6 1/16 x 9 3/8 UL	1
22	S39649	U-Bolt - 5/8 x 4 x 7 3/4 UL	2
23	S27987	Locknut - 3/8 Center Lock	28
24	W-516	Nut - 1/2	18
25	W-517	Nut - 5/8	4
26	W-518	Nut - 3/4	2
27	W-525	Lockwasher - 1/2	18
28	W-526	Lockwasher - 5/8	4
29	W-527	Lockwasher - 3/4	2
30	R480034	Hose - .929 ID x 1.169 OD/ft (75 ft roll) 10"SP-1650 ft . . 12"SP-1350 ft . . 15"SP-1125 ft.	
	N73085	Hose - 1 ID x 1.250 OD (100 ft roll) - 2023 to 2025	
	N75770	**Hose - 1 ID x 1.250 OD (100 ft roll) - RED (Fertilizer) - 2026 to Present**	
	N75771	**Hose - 1 ID x 1.250 OD (100 ft roll) - BLACK (Seed) - 2026 to Present**	
31	N69294	Hose - 2 1/2 ID x 100 ft roll - **Black** (Air Cart side of couplers) (**Seed**)	225ft
	N72592	Hose - 2 1/2 ID x 100 ft roll - **Red** (Air Cart side of couplers) (**Fertilizer**)	
32	N75812	Hose - 3 ID x 100 ft roll - **Black** - (**Seed**)	325ft
	N75813	Hose - 3 ID x 100 ft roll - **Red** - (**Fertilizer**)	
33	N66092	Primary Pipe SS - 3 x 72 Lg	4
34	N64094	Primary Pipe SS - 3 x 96 Lg	4
35	N66374	Distribution Hose Clamp - Wing - 3 5/8 Dia	2
36	N66375	Distribution Hose Support Bracket - Wing - 3 5/8 Dia	2
37	N66395	Primary Hose Guide Plate - Wing	2
38	N66775	Distribution Pipe Spacer - 6 pipe - Wing	4
39	N66855	Distribution Pipe Clamp - 2 pipe - Wing	4
40	N67200	Head Mounting Bracket - 30 Degree - Left (shown)	1
40A	N67202	Head Mounting Bracket - 30 Degree - Right	1
41	N50842	Bushings - .385 ID x 5/8 OD x 3 1/4 Lg	8
42	N19723	U-Bolt - 3/8 x 4 1/16 x 6 15/16 UL	8

Dual Shoot - Offset Heads - Tow Between - 2023 to Present
70 ft - 21m - 8 primaries - 10, 12 and 15 inch (250 - 300 - 380mm) Spacing

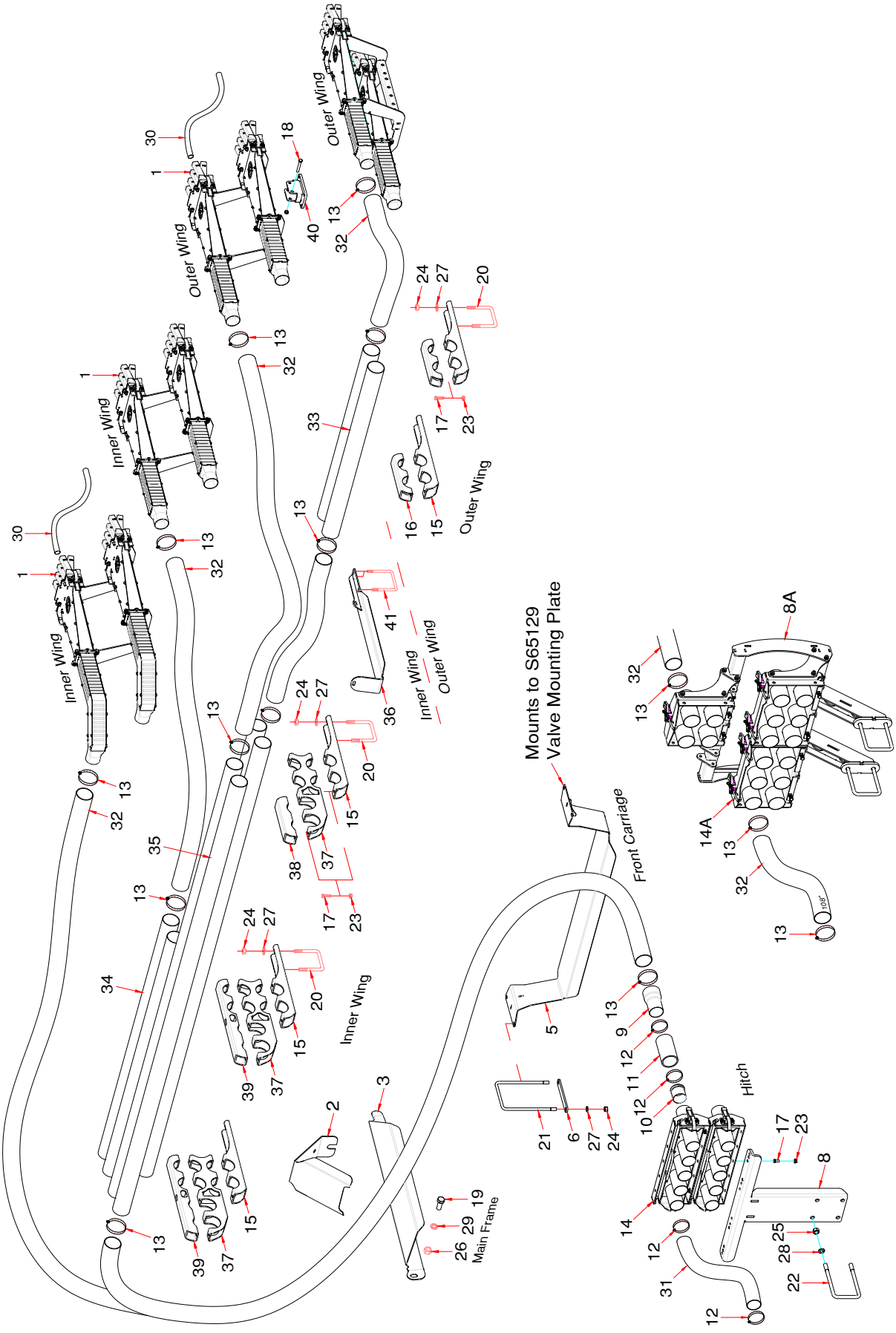

Dual Shoot Offset Heads Tow Between - 70 ft - 21m - 8 primaries - 2023 to Present

Item	Part No.	Description	Qty
		For 10, 12 and 15 inch - 250mm, 300mm and 380mm spacing	
1	* * * * *	Divider Head Assembly (Refer to Divider Head Assembly for details)	
		10" spacing uses: N/A	
		N66510 - Divider Head Assembly - 10 Outlet	8
		* N/A * - Divider Head Assembly - 11 Outlet	8
		12" spacing uses:	
		N66508 - Divider Head Assembly - 8 Outlet	4
		N66509 - Divider Head Assembly - 9 Outlet	12
		15" spacing uses:	
		N66507 - Divider Head Assembly - 7 Outlet	16
2	S67250	Primary Hose Deflector	2
3	S66430	Primary Hose Hose Suport - Main - Left side (shown)	1
	S66435	Primary Hose Hose Suport - Main - Right side	1
4	* * * * *		
5	N67245	Primary Hose Hose Suport - Between	1
6	N67274	Spacer Plate	1
7	N67275	Kit - Primary Hose Hose Suport - Between (Includes items 5, 6, 21, 24 and 27)	
8	N51962	Coupler Tower - Between	1
8A	N75945	Coupler Bracket - Between - Cart with 3" Collectors	1
9	N64095	Primary Hose Adapter	16
10	N37920	Equalizer	0
11	N19428	Hose - 2.54 ID x 2.79 OD x 5 Lg	16
12	N11905	Hose Clamp - 2 1/2 - HC5-44 (Air Cart side uses 36)	104
13	N64099	Hose Clamp - 3 - SSTCH5-400 (Range 3 1/8 - 3 3/4)	66
14	* * * * *	2 1/2 Quick Coupler - (Refer to Quick Coupler Assembly for details)	4
14A	* * * * *	3 Quick Coupler - (Refer to Quick Coupler Assembly for details)	
15	N66339	Distribution Pipe Support Bracket - Wing	10
16	N66359	Distribution Pipe Clamp - Wing	4
17	W-187	Hex Bolt - 3/8 x 1 1/4 Lg	40
18	W-480	Hex Bolt - 3/8 x 2 1/2 Lg (Refer to Divider Head Assembly for details)	2
19	BW-10	Hex Bolt - 3/4 x 1 3/4 Lg	2
20	C-3932	U-Bolt - 1/2 x 4 x 7 1/4 UL	10
21	H25628	U-Bolt - 1/2 x 6 1/16 x 9 3/8 UL	1
22	S39649	U-Bolt - 5/8 x 4 x 7 3/4 UL	2
23	S27987	Locknut - 3/8 Center Lock	40
24	W-516	Hex Nut - 1/2	22
25	W-517	Hex Nut - 5/8	4
26	W-518	Hex Nut - 3/4	2
27	W-525	Lockwasher - 1/2	22
28	W-526	Lockwasher - 5/8	4
29	W-527	Lockwasher - 3/4	2
30	R480034	Hose - .929 ID x 1.169 OD/ft (75 ft roll) 10"SP-1875 ft . . 12"SP-1500 ft . . 15"SP-1275 ft.	
	N73085	Hose - 1 ID x 1.250 OD (100 ft roll) - 2023 to 2025	
	N75770	**Hose - 1 ID x 1.250 OD (100 ft roll) - RED (Fertilizer) - 2026 to Present**	
	N75771	**Hose - 1 ID x 1.250 OD (100 ft roll) - BLACK (Seed) - 2026 to Present**	
31	N69294	Hose - 2 1/2 ID x 100 ft roll - **Black** (Air Cart side of couplers) (**Seed**)	250ft
	N72592	Hose - 2 1/2 ID x 100 ft roll - **Red** (Air Cart side of couplers) (**Fertilizer**)	
32	N75812	Hose - 3 ID x 100 ft roll - **Black** - (**Seed**)	400ft
	N75813	Hose - 3 ID x 100 ft roll - **Red** - (**Fertilizer**)	
33	N66396	Primary Pipe SS - 3 x 48 Lg	4
34	N64092	Primary Pipe SS - 3 x 72 Lg	4
35	N64096	Primary Pipe SS - 3 x 120 Lg	8
36	N66395	Primary Hose Guide Plate	2
37	N66775	Distribution Pipe Spacer - 6 pipe - Wing	6
38	N66855	Distribution Pipe Clamp - 2 pipe - Wing	2
39	N66860	Distribution Pipe Clamp - 4 pipe - Wing	4
40	N67640	Head Mounting Bracket - Straight	2
41	N19723	U-Bolt - 3/8 x 4 1/16 x 6 15/16 UL	8

Dual Shoot - Offset Heads - Tow Between - 2023 to Present
70 ft - 21m - 9 primaries - 10, 12 and 15 inch (250 - 300 - 380mm) Spacing

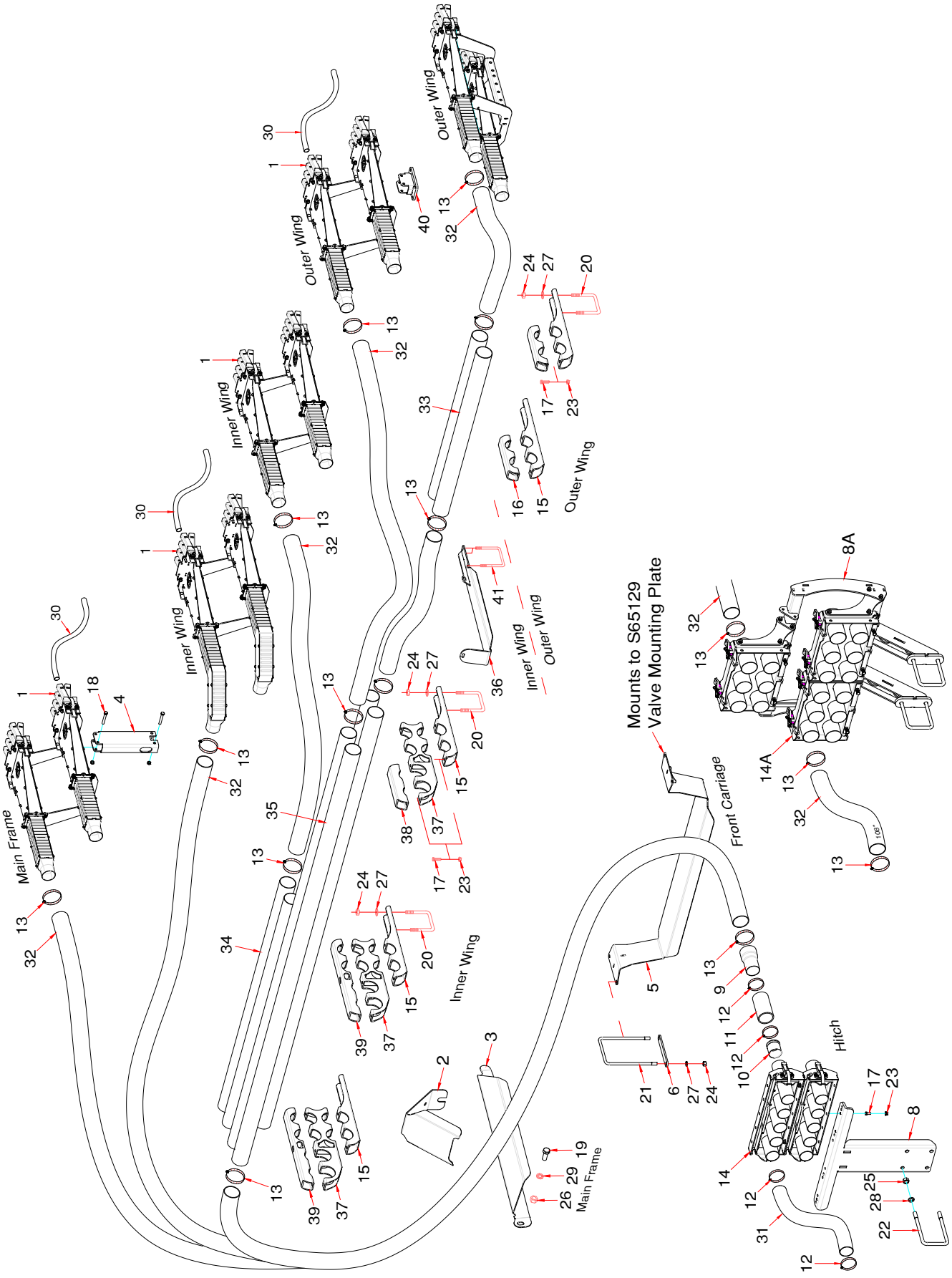

Dual Shoot Offset Heads Tow Between - 70 ft - 21m - 9 primaries - 2023 to Present

Item	Part No.	Description	Qty
		For 10, 12 and 15 inch - 250mm, 300mm and 380mm spacing	
1	* * * * *	Divider Head Assembly (Refer to Divider Head Assembly for details)	
		10" spacing uses:	
		N66509 - Divider Head Assembly - 9 Outlet	12
		N66510 - Divider Head Assembly - 10 Outlet	6
		12" spacing uses:	
		N66507 - Divider Head Assembly - 7 Outlet	4
		N66508 - Divider Head Assembly - 8 Outlet	14
		15" spacing uses:	
		N66506 - Divider Head Assembly - 6 Outlet	14
		N66507 - Divider Head Assembly - 7 Outlet	4
2	S67250	Primary Hose Deflector	2
3	S66430	Primary Hose Hose Suport - Main - Left side (shown)	1
	S66435	Primary Hose Hose Suport - Main - Right side	1
4	S65390	Divider Head Pedestal - Main Frame	1
5	N67245	Primary Hose Hose Suport - Between	1
6	N67274	Spacer Plate	1
7	N67275	Kit - Primary Hose Hose Suport - Between (Includes items 5, 6, 21, 24 and 27)	
8	N51962	Coupler Tower - Between	1
8A	N75945	Coupler Bracket - Between - Cart with 3" Collectors	1
9	N64095	Primary Hose Adapter	18
10	N37920	Equalizer	0
11	N19428	Hose - 2.54 ID x 2.79 OD x 5 Lg	18
12	N11905	Hose Clamp - 2 1/2 - HC5-44 (Air Cart side uses 36)	108
13	N64099	Hose Clamp - 3 - SSTCH5-400 (Range 3 1/8 - 3 3/4)	68
14	* * * * *	2 1/2 Quick Coupler - (Refer to Quick Coupler Assembly for details)	4
14A	* * * * *	3 Quick Coupler - (Refer to Quick Coupler Assembly for details)	3
15	N66339	Distribution Pipe Support Bracket - Wing	10
16	N66359	Distribution Pipe Clamp - Wing	4
17	W-187	Hex Bolt - 3/8 x 1 1/4 Lg	40
18	W-480	Hex Bolt - 3/8 x 2 1/2 Lg (Refer to Divider Head Assembly for details)	2
19	BW-10	Hex Bolt - 3/4 x 1 3/4 Lg	2
20	C-3932	U-Bolt - 1/2 x 4 x 7 1/4 UL	10
21	H25628	U-Bolt - 1/2 x 6 1/16 x 9 3/8 UL	1
22	S39649	U-Bolt - 5/8 x 4 x 7 3/4 UL	2
23	S27987	Locknut - 3/8 Center Lock	40
24	W-516	Hex Nut - 1/2	22
25	W-517	Hex Nut - 5/8	4
26	W-518	Hex Nut - 3/4	2
27	W-525	Lockwasher - 1/2	22
28	W-526	Lockwasher - 5/8	4
29	W-527	Lockwasher - 3/4	2
30	R480034	Hose - .929 ID x 1.169 OD/ft (75 ft roll) 10"SP-1875 ft . . 12"SP-1500 ft . . 15"SP-1275 ft.	
	N73085	Hose - 1 ID x 1.250 OD (100 ft roll) - 2023 to 2025	
	N75770	**Hose - 1 ID x 1.250 OD (100 ft roll) - RED (Fertilizer) - 2026 to Present**	
	N75771	**Hose - 1 ID x 1.250 OD (100 ft roll) - BLACK (Seed) - 2026 to Present**	
31	N69294	Hose - 2 1/2 ID x 100 ft roll - **Black** (Air Cart side of couplers) (**Seed**)	250ft
	N72592	Hose - 2 1/2 ID x 100 ft roll - **Red** (Air Cart side of couplers) (**Fertilizer**)	
32	N75812	Hose - 3 ID x 100 ft roll - **Black** - (**Seed**)	400ft
	N75813	Hose - 3 ID x 100 ft roll - **Red** - (**Fertilizer**)	
33	N66396	Primary Pipe SS - 3 x 48 Lg	4
34	N64092	Primary Pipe SS - 3 x 72 Lg	4
35	N64096	Primary Pipe SS - 3 x 120 Lg	8
36	N66395	Primary Hose Guide Plate	2
37	N66775	Distribution Pipe Spacer - 6 pipe - Wing	6
38	N66855	Distribution Pipe Clamp - 2 pipe - Wing	2
39	N66860	Distribution Pipe Clamp - 4 pipe - Wing	4
40	N67640	Head Mounting Bracket - Straight	2
41	N19723	U-Bolt - 3/8 x 4 1/16 x 6 15/16 UL	8

Dual Shoot - Offset Heads - Tow Between - 2023 to 2024
80 ft - 24m - 10 primaries - 10 and 12 inch (250 - 300) Spacing

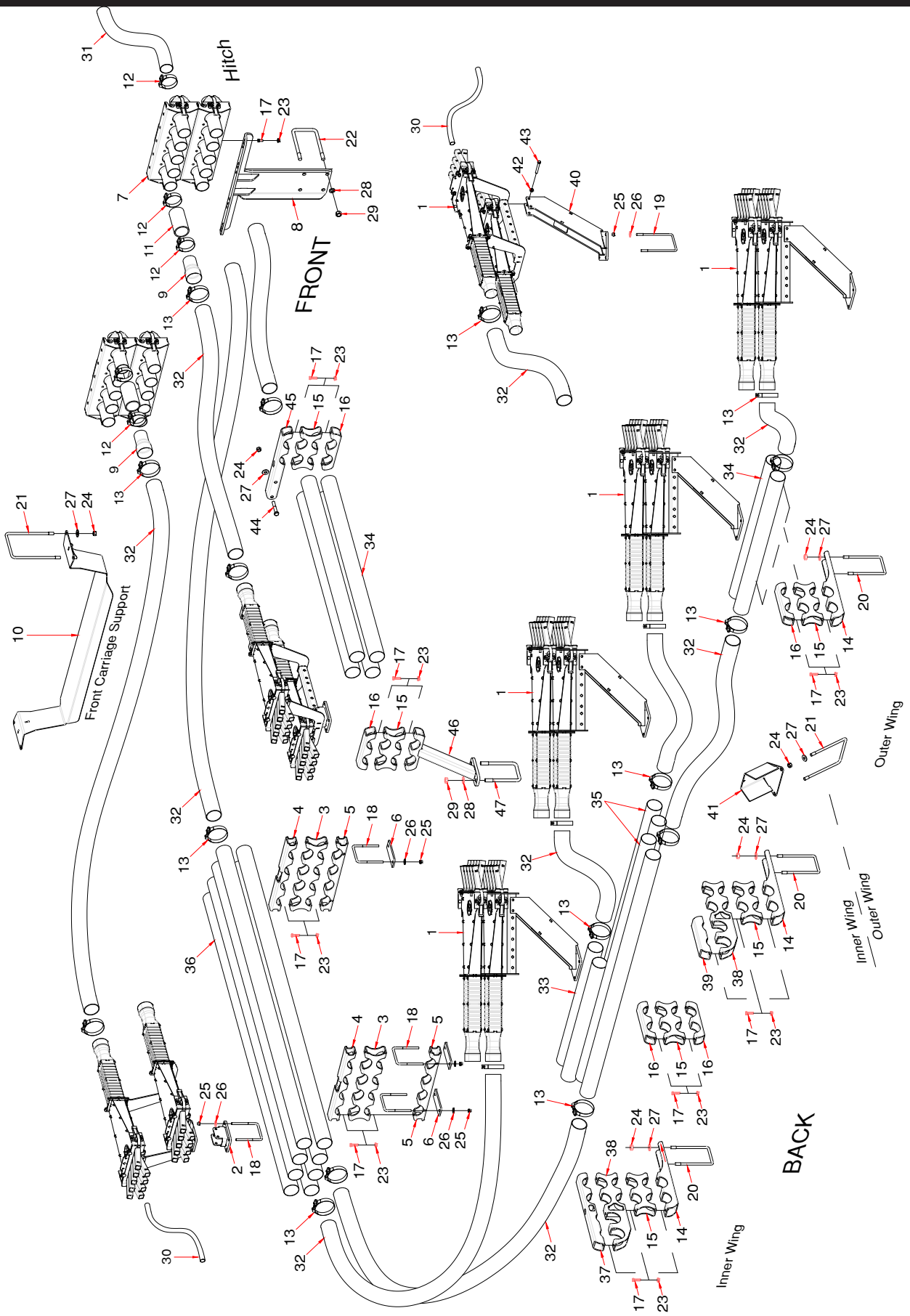

Dual Shoot Offset Heads Tow Between - 80 ft - 24m - 10 primaries - 2023 to 2024

Item	Part No.	Description	Qty
		For 10 and 12 inch - 250mm and 300mm spacing	
1	* * * * *	Divider Head Assembly (Refer to Divider Head Assembly for details)	
		10" spacing uses: 97 runs	
		N66509 - Divider Head Assembly - 9 Outlet	6
		N66510 - Divider Head Assembly - 10 Outlet	14
		12" spacing uses: 82 runs	
		N66508 - Divider Head Assembly - 8 Outlet	16
		N66509 - Divider Head Assembly - 9 Outlet	4
2	N67640	Head Mounting Bracket - Straight	2
3	N66322	Distribution Pipe Spacer - Main	2
4	N66321	Distribution Pipe Clamp - Main	2
5	N72833	Distribution Pipe Clamp - Front Carriage	2
6	N72834	Clamp Plat - Main	4
7	* * * * *	Quick Coupler - 5 Run (Refer to Quick Coupler Assembly for details)	4
8	N51962	Coupler Tower - Between	1
9	N64095	Primary Hose Adapter	20
10	N67245	Primary Hose Hose Suport - Between	1
11	N19428	Hose - 2.54 ID x 2.79 OD x 5 Lg	20
12	N73068	Hose Clamp -T-Bolt - 2 9/16 - 2 7/8	40
13	N64099	Hose Clamp - 3 - SSTCH5-400 (Range 3 1/8 - 3 3/4)	104
14	N66339	Distribution Pipe Support Bracket - Wing	8
15	N66358	Distribution Pipe Spacer - 2 pipe - Wing	14
16	N66359	Distribution Pipe Clamp - Wing	12
17	W-187	Hex Bolt - 3/8 x 1 1/4 Lg	74
18	N15098	U-Bolt - 3/8 x 4 x 5 UL	8
19	N19723	U-Bolt - 3/8 x 4 1/16 x 6 15/16 UL	16
20	C-3932	U-Bolt - 1/2 x 4 x 7 1/4 UL	8
21	H21437	U-Bolt - 1/2 x 6 x 9 UL	4
22	S39649	U-Bolt - 5/8 x 4 x 7 3/4 UL	2
23	S27987	Locknut - 3/8 Center Lock	74
24	S47110	Lock Nut - 1/2 Center Lock	28
25	10229	Locknut - 3/8 Nylock	48
26	W-538	Flat Washer - 7/16	48
27	S-766	Flat Washer - 1/2	28
28	W-526	Lockwasher - 5/8	8
29	W-517	Nut - 5/8	8
30	N73085	Hose - 1 ID x 1.250 OD (100 ft roll)	21
	N75770	**Hose - 1 ID x 1.250 OD (100 ft roll) - RED (Fertilizer) - 2026 to Present**	
	N75771	**Hose - 1 ID x 1.250 OD (100 ft roll) - BLACK (Seed) - 2026 to Present**	
31	N69294	Hose - 2 1/2 ID x 100 ft roll - **Black** (Air Cart side of couplers) **(Seed)**	275ft
	N72592	Hose - 2 1/2 ID x 100 ft roll - **Red** (Air Cart side of couplers) (**Fertilizer**)	
32	N75812	Hose - 3 ID x 100 ft roll - **Black** - (**Seed**)	2
	N75813	Hose - 3 ID x 100 ft roll - **Red** - (**Fertilizer**)	2
33	S72398	Primary Pipe SS - 3 x 36 Lg	4
34	N66396	Primary Pipe SS - 3 x 48 Lg	12
35	N64092	Primary Pipe SS - 3 x 72 Lg	8
36	N64094	Primary Pipe SS - 3 x 96 Lg	8
37	N66860	Distribution Pipe Clamp - 4 pipe - Wing	2
38	N66775	Distribution Pipe Spacer - 6 pipe - Wing	4
39	N66855	Distribution Pipe Clamp - 2 pipe - Wing	2
40	S72391	Mount Bracket	8
41	S72979	Hose Guard	2
42	M-3388	Locknut - 3/8 Unitorque	20
43	W-480	Hex Bolt - 3/8 x 2 1/2 Lg	20
44	W-492	Hex Bolt - 1/2 x 3 Lg	4
45	N73189	Distribution Pipe Clamp - 2 pipe	2
46	N73186	Distribution Pipe Stand - 2 pipe	2
47	S39649	U-Bolt - 5/8 x 4 x 7 3/4 UL	4

Dual Shoot - Offset Heads - Tow Between - 2025
80 ft - 24m - 10 primaries - 10 and 12 inch (250 - 300) Spacing

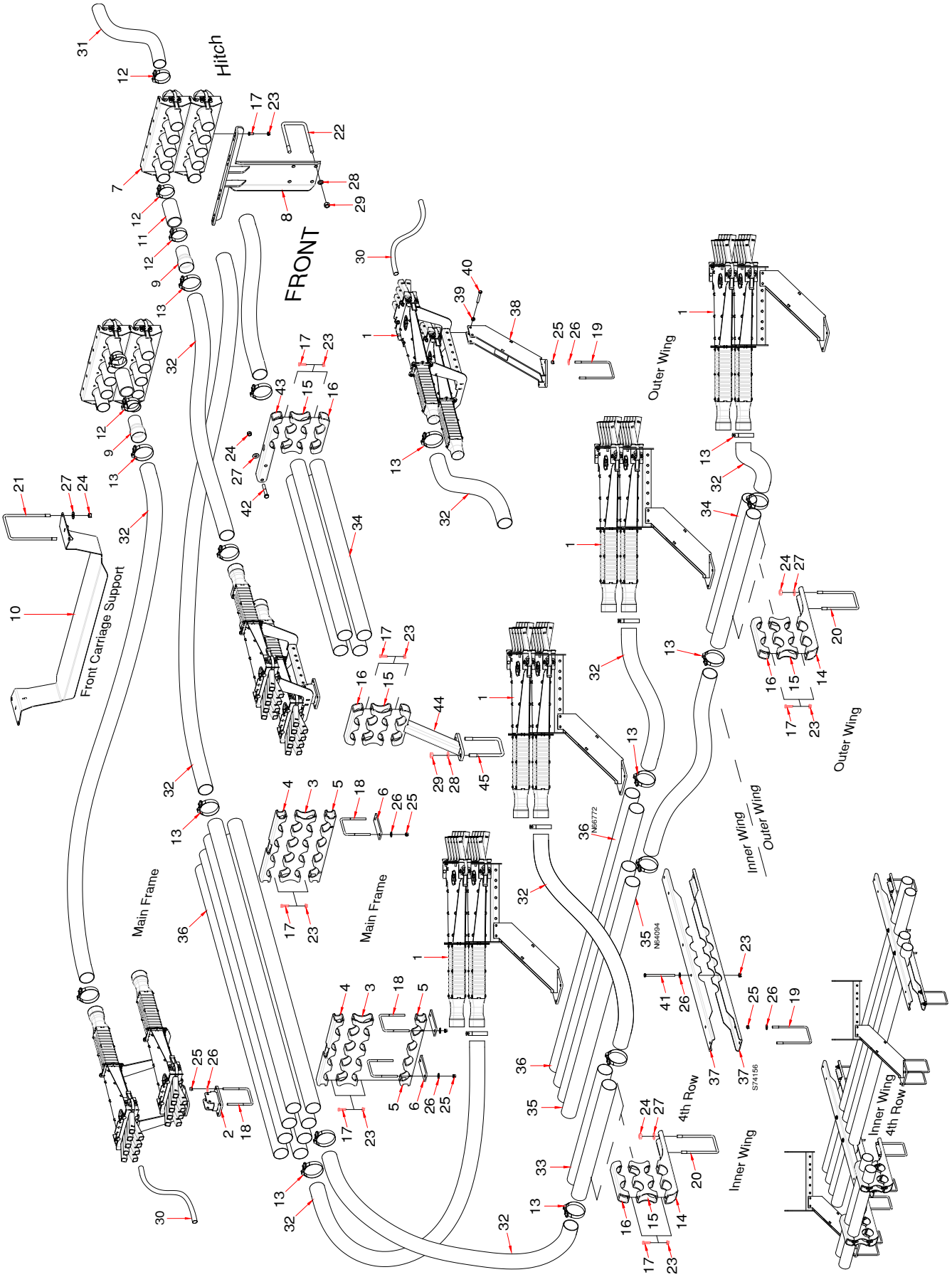

Dual Shoot Offset Heads Tow Between - 80 ft - 24m - 10 primaries - 2025			
Item	**Part No.**	**Description**	**Qty**
		For 10 and 12 inch - 250mm and 300mm spacing	
1	* * * * *	Divider Head Assembly (Refer to Divider Head Assembly for details)	
		10" spacing uses: 97 runs	
		N66509 - Divider Head Assembly - 9 Outlet	6
		N66510 - Divider Head Assembly - 10 Outlet	14
		12" spacing uses: 82 runs	
		N66508 - Divider Head Assembly - 8 Outlet	16
		N66509 - Divider Head Assembly - 9 Outlet	4
2	N67640	Head Mounting Bracket - Straight	2
3	N66322	Distribution Pipe Spacer - Main	2
4	N66321	Distribution Pipe Clamp - Main	2
5	N72833	Distribution Pipe Clamp - Front Carriage	2
6	N72834	Clamp Plat - Main	4
7	* * * * *	Quick Coupler - 5 Run (Refer to Quick Coupler Assembly for details)	4
8	N51962	Coupler Tower - Between	1
9	N64095	Primary Hose Adapter	20
10	N67245	Primary Hose Hose Suport - Between	1
11	N19428	Hose - 2.54 ID x 2.79 OD x 5 Lg	20
12	N73068	Hose Clamp -T-Bolt - 2 9/16 - 2 7/8	40
13	N64099	Hose Clamp - 3 - SSTCH5-400 (Range 3 1/8 - 3 3/4)	104
14	N66339	Distribution Pipe Support Bracket - Wing	8
15	N66358	Distribution Pipe Spacer - 2 pipe - Wing	16
16	N66359	Distribution Pipe Clamp - Wing	12
17	W-187	Hex Bolt - 3/8 x 1 1/4 Lg	56
18	N15098	U-Bolt - 3/8 x 4 x 5 UL	8
19	N19723	U-Bolt - 3/8 x 4 1/16 x 6 15/16 UL	16
20	C-3932	U-Bolt - 1/2 x 4 x 7 1/4 UL	8
21	H21437	U-Bolt - 1/2 x 6 x 9 UL	4
22	S39649	U-Bolt - 5/8 x 4 x 7 3/4 UL	2
23	S27987	Locknut - 3/8 Center Lock	64
24	S47110	Lock Nut - 1/2 Center Lock	28
25	10229	Locknut - 3/8 Nylock	60
26	W-538	Flat Washer - 7/16	60
27	S-766	Flat Washer - 1/2	28
28	W-526	Lockwasher - 5/8	8
29	W-517	Nut - 5/8	8
30	N73085	Hose - 1 ID x 1.250 OD (100 ft roll) - 2023 to 2025	21
	N75770	**Hose - 1 ID x 1.250 OD (100 ft roll) - RED (Fertilizer) - 2026 to Present**	
	N75771	**Hose - 1 ID x 1.250 OD (100 ft roll) - BLACK (Seed) - 2026 to Present**	
31	N69294	Hose - 2 1/2 ID x 100 ft roll - **Black** (Air Cart side of couplers) **(Seed)**	275ft
	N72592	Hose - 2 1/2 ID x 100 ft roll - **Red** (Air Cart side of couplers) (**Fertilizer**)	
32	N75812	Hose - 3 ID x 100 ft roll - **Black** - (**Seed**)	2
	N75813	Hose - 3 ID x 100 ft roll - **Red** - (**Fertilizer**)	2
33	S72398	Primary Pipe SS - 3 x 36 Lg	4
34	N66396	Primary Pipe SS - 3 x 48 Lg	12
35	N64094	Primary Pipe SS - 3 x 96 Lg	8
36	N66772	Primary Pipe SS - 3 x 108 Lg	4
37	S74156	Mount Bracket	8
38	S72391	Mount Bracket	8
39	M-3388	Locknut - 3/8 Unitorque	20
40	W-480	Hex Bolt - 3/8 x 2 1/2 Lg	20
41	C-3918	Hex Bolt - 3/8 x 5 Lg	8
42	W-492	Hex Bolt - 1/2 x 3 Lg	4
43	N73189	Distribution Pipe Clamp - 2 pipe	2
44	N73186	Distribution Pipe Stand - 2 pipe	2
45	S39649	U-Bolt - 5/8 x 4 x 7 3/4 UL	4

Dual Shoot - Offset Heads - Tow Between - 2026 to Present
80 ft - 24m - 10 primaries - 10 and 12 inch (250 - 300) Spacing

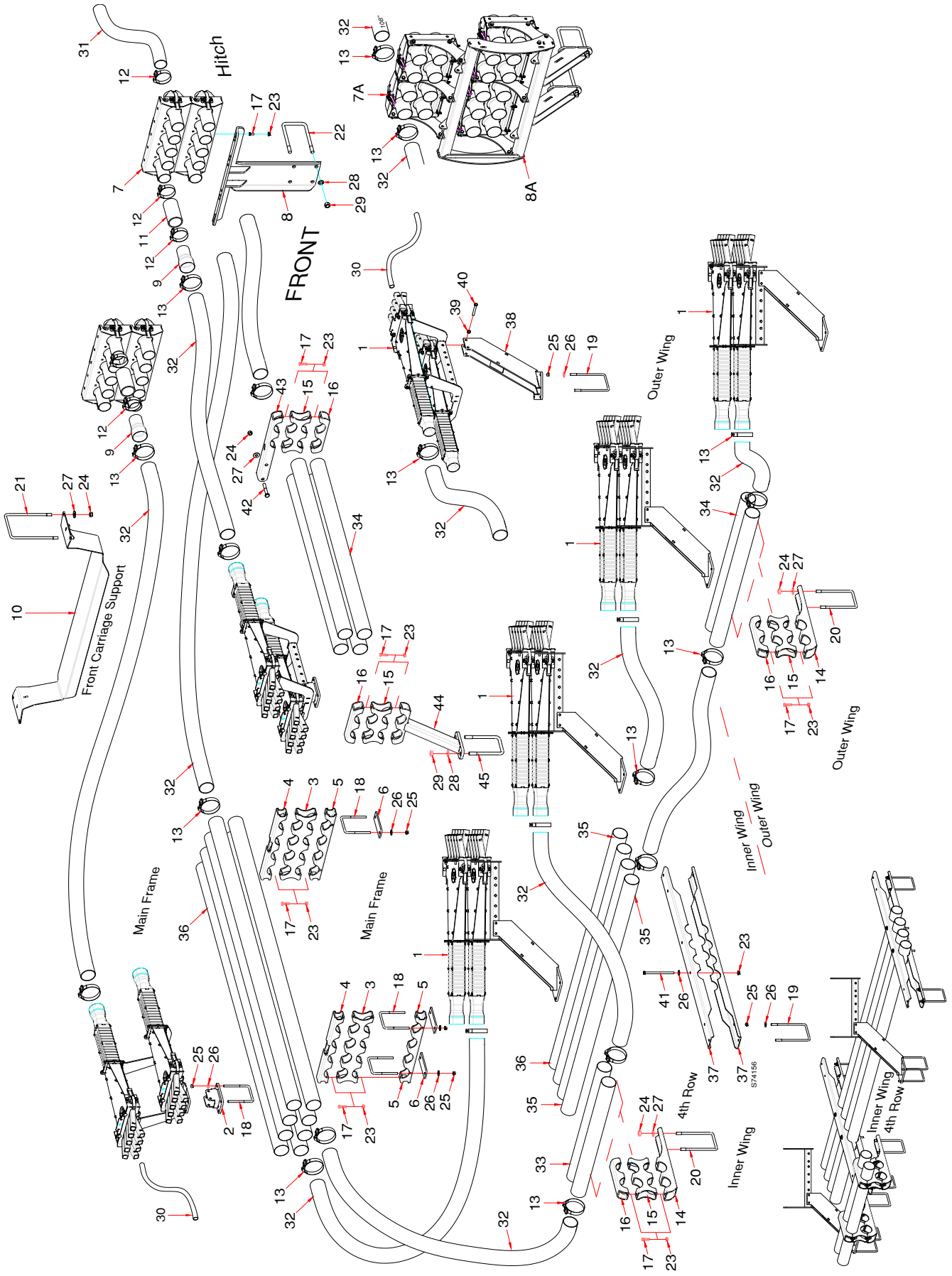

Dual Shoot Offset Heads Tow Between - 80 ft - 24m - 10 primaries - 2026 to Present

Item	Part No.	Description	Qty
		For 10 and 12 inch - 250mm and 300mm spacing	
1	* * * * *	Divider Head Assembly (Refer to Divider Head Assembly for details)	
		10" spacing uses: 97 runs	
		N66509 - Divider Head Assembly - 9 Outlet	6
		N66510 - Divider Head Assembly - 10 Outlet	14
		12" spacing uses: 82 runs	
		N66508 - Divider Head Assembly - 8 Outlet	16
		N66509 - Divider Head Assembly - 9 Outlet	4
2	N67640	Head Mounting Bracket - Straight	2
3	N66322	Distribution Pipe Spacer - Main	2
4	N66321	Distribution Pipe Clamp - Main	2
5	N72833	Distribution Pipe Clamp - Front Carriage	2
6	N72834	Clamp Plat - Main	4
7	* * * * *	2 1/2 Quick Coupler - (Refer to Quick Coupler Assembly for details)	4
7A	* * * * *	3 Quick Coupler - (Refer to Quick Coupler Assembly for details)	
8	N51962	Coupler Tower - Between - Cart with 2 1/2" Collectors	1
8A	N75945	Coupler Bracket - Between - Cart with 3" Collectors	1
9	N64095	Primary Hose Adapter	20
10	N67245	Primary Hose Hose Suport - Between	1
11	N19428	Hose - 2.54 ID x 2.79 OD x 5 Lg	20
12	N73068	Hose Clamp -T-Bolt - 2 9/16 - 2 7/8	40
13	N64099	Hose Clamp - 3 - SSTCH5-400 (Range 3 1/8 - 3 3/4)	104
14	N66339	Distribution Pipe Support Bracket - Wing	8
15	N66358	Distribution Pipe Spacer - 2 pipe - Wing	16
16	N66359	Distribution Pipe Clamp - Wing	12
17	W-187	Hex Bolt - 3/8 x 1 1/4 Lg	56
18	N15098	U-Bolt - 3/8 x 4 x 5 UL	8
19	N19723	U-Bolt - 3/8 x 4 1/16 x 6 15/16 UL	16
20	C-3932	U-Bolt - 1/2 x 4 x 7 1/4 UL	8
21	H21437	U-Bolt - 1/2 x 6 x 9 UL	4
22	S39649	U-Bolt - 5/8 x 4 x 7 3/4 UL	2
23	S27987	Locknut - 3/8 Center Lock	64
24	S47110	Lock Nut - 1/2 Center Lock	28
25	10229	Locknut - 3/8 Nylock	60
26	W-538	Flat Washer - 7/16	60
27	S-766	Flat Washer - 1/2	28
28	W-526	Lockwasher - 5/8	8
29	W-517	Nut - 5/8	8
30	N73085	Hose - 1 ID x 1.250 OD (100 ft roll) - 2023 to 2025	21
	N75770	**Hose - 1 ID x 1.250 OD (100 ft roll) - RED (Fertilizer) - 2026 to Present**	
	N75771	**Hose - 1 ID x 1.250 OD (100 ft roll) - BLACK (Seed) - 2026 to Present**	
31	N69294	Hose - 2 1/2 ID x 100 ft roll - **Black** (Air Cart side of couplers) **(Seed)**	275ft
	N72592	Hose - 2 1/2 ID x 100 ft roll - **Red** (Air Cart side of couplers) (**Fertilizer**)	
32	N75812	Hose - 3 ID x 100 ft roll - **Black** - (**Seed**)	2
	N75813	Hose - 3 ID x 100 ft roll - **Red** - (**Fertilizer**)	2
33	S72398	Primary Pipe SS - 3 x 36 Lg	4
34	N66396	Primary Pipe SS - 3 x 48 Lg	12
35	N64094	Primary Pipe SS - 3 x 96 Lg	12
36	* * * * *		
37	S74156	Mount Bracket	8
38	S72391	Mount Bracket	8
39	M-3388	Locknut - 3/8 Unitorque	20
40	W-480	Hex Bolt - 3/8 x 2 1/2 Lg	20
41	C-3918	Hex Bolt - 3/8 x 5 Lg	8
42	W-492	Hex Bolt - 1/2 x 3 Lg	4
43	N73189	Distribution Pipe Clamp - 2 pipe	2
44	N73186	Distribution Pipe Stand - 2 pipe	2
45	S39649	U-Bolt - 5/8 x 4 x 7 3/4 UL	4

Broadcast Kit
10 and 12 inch (250 - 300mm) Spacing

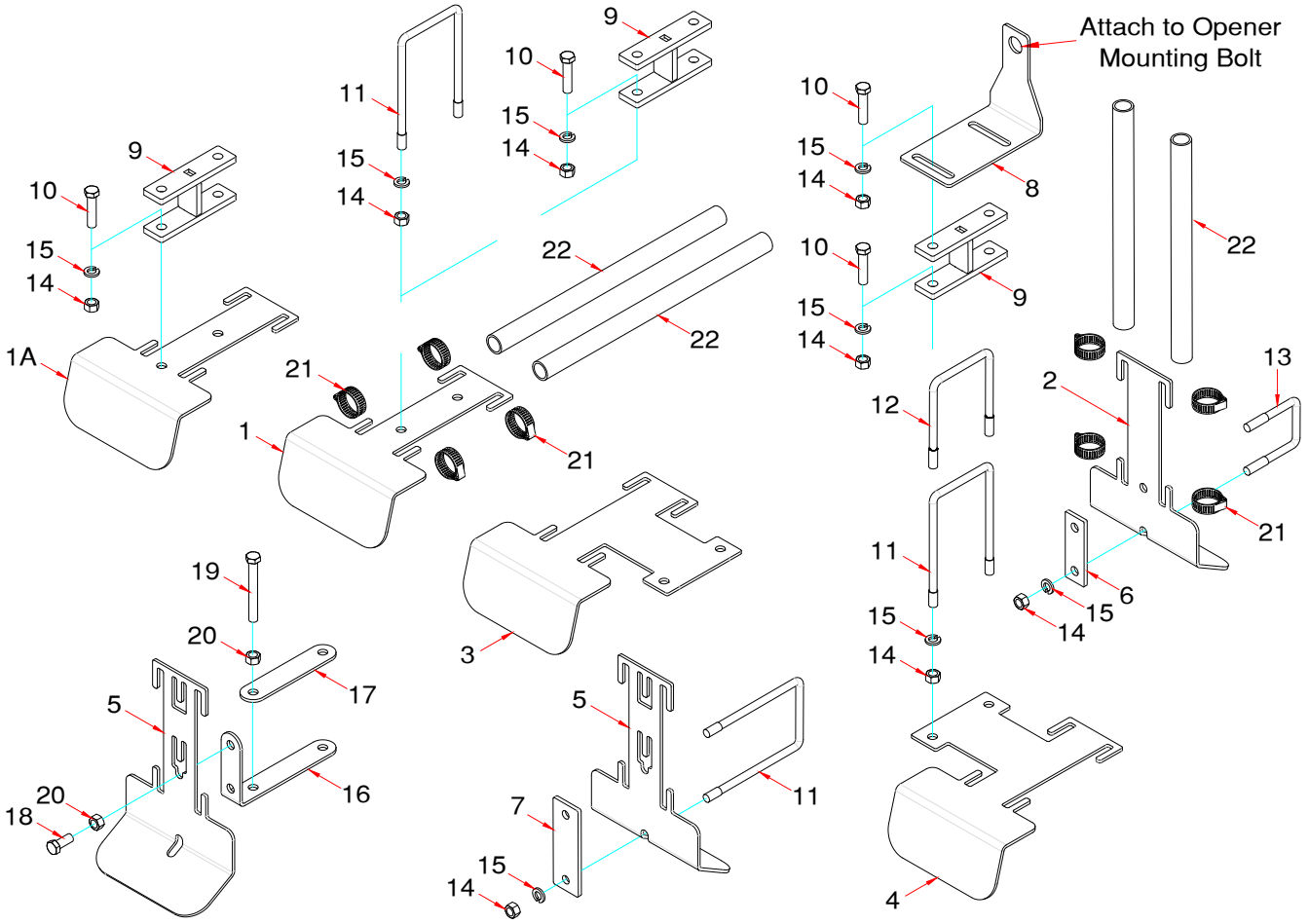

Item	Part No.	Description	Qty
1	S72420	Deflector - Wing	AsReq
1A	S76546	Deflector - 80ft Flip Wing - 10 inch spacing	2
2	S72421	Deflector - Main	AsReq
3	S72428	Deflector - Right	AsReq
4	S72429	Deflector - Left	AsReq
5	S73224	Deflector - Main - 80 ft	1
		Quantities below are per Deflector Assembly	
6	S72422	Clamp	1
7	S72395	Clamp - 80 ft - Prior to 2026	1
8	S73392	Bracket - 80 ft	1
9	S72431	Shank Mount Spacer	1
10	S-776	Hex Bolt - 1/2 x 1 1/2 Lg	2
11	C-3932	U-Bolt - 1/2 x 4 x 7 1/4 UL	1
12	S-1934	U-Bolt - 1/2 x 4 x 5 9/16 UL (Only used on 80ft Flip Wing 2 per Drill)	1
13	D-4825	U-Bolt - 1/2 x 2 1/2 x 3 3/4 UL	1
14	W-516	Hex Nut - 1/2	2
15	W-525	Lockwasher - 1/2	2
16	S76544	Tube Clamp Bracket - 80 ft - 2026 to Present	1
17	S76545	Tube Clamp Strap - 80 ft - 2026 to Present	1
18	W-484	Hex Bolt - 1/2 x 1 Lg	2
19	W-492	Hex Bolt - 1/2 x 3 Lg	2
20	S47110	Lock Nut - 1/2 Center	4
21	N11470	Hose Clamp - 1 - HC5-20	4
22	R480034	Hose - .929 ID x 1.169 OD/ft (75 ft roll) . . Prior to 2023	AsReq
	N73085	**Hose - 1 ID x 1.250 OD (100 ft roll) - 2023 to Present**	

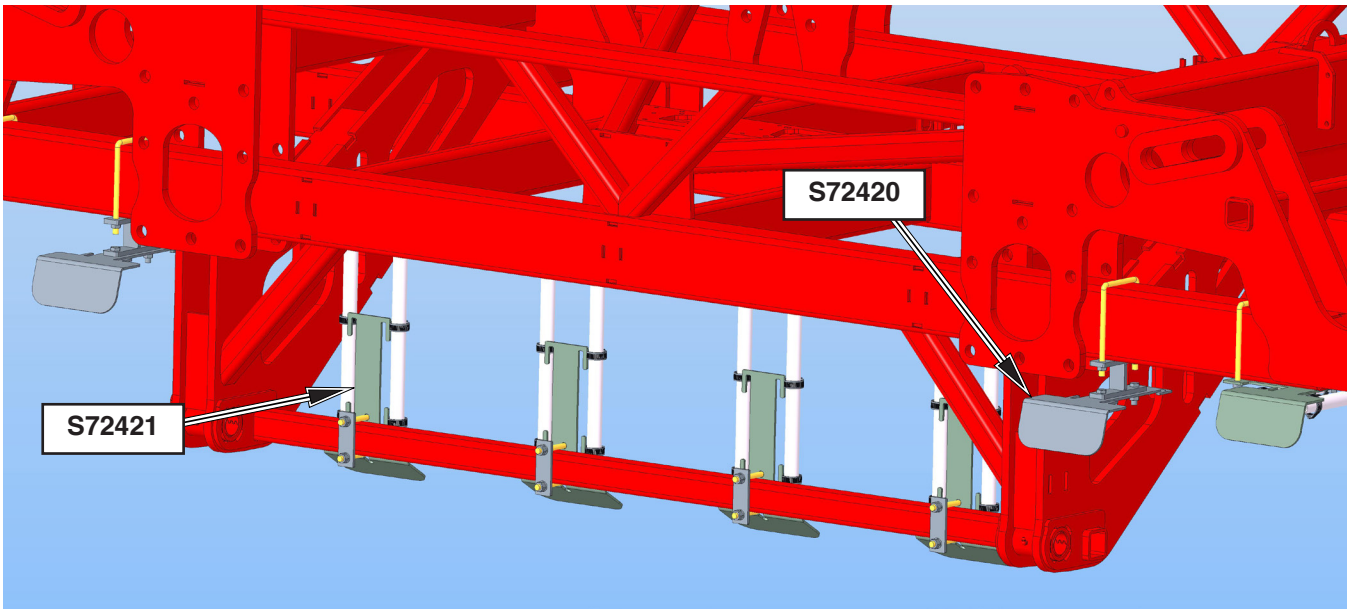

Main Frame - 60 ft 10 inch spacing shown

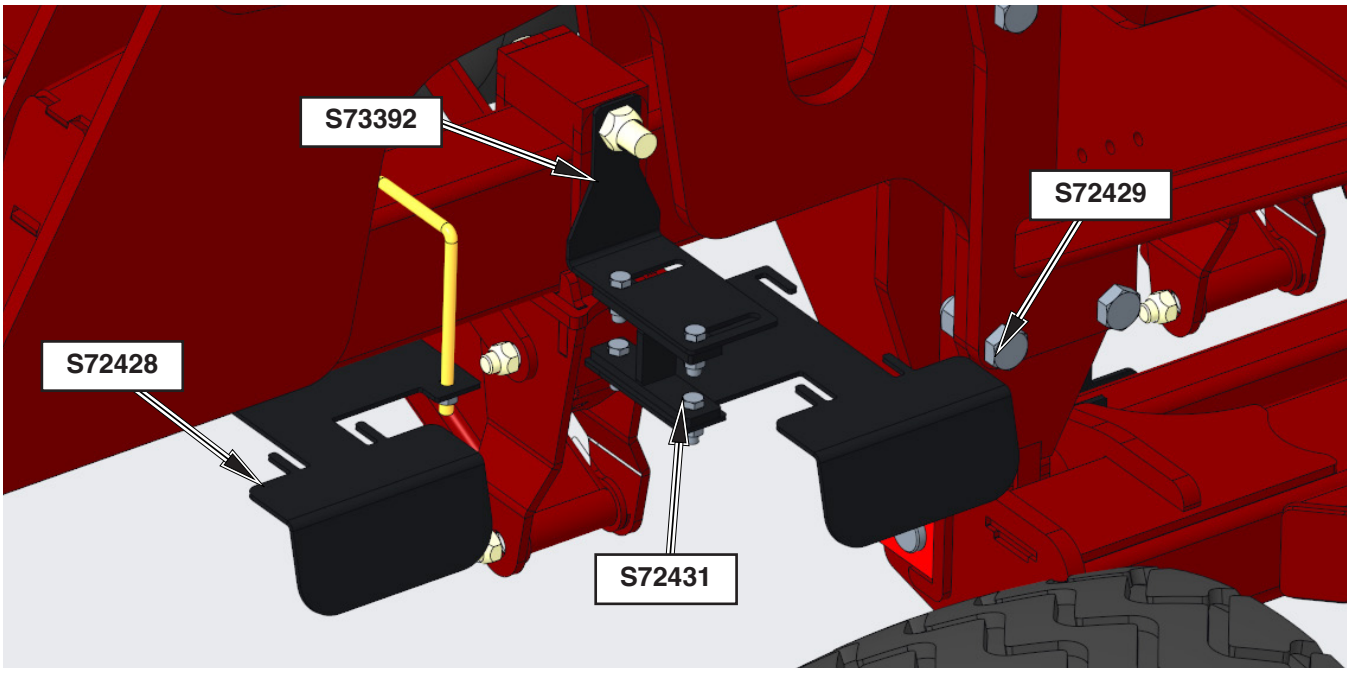

Main Frame - 80 ft 10 inch spacing shown

Notes

Section 6: Options

Section Contents

Rear Tow Hitch 6-2
Remote Clutch Switch 6-3
4th Row Kit 6-4
- 40 ft - 12m 6-4
- 50 ft - 15m 6-6
- 60 ft - 18m 6-8
- 70 ft - 21m 6-10

Weight Kit 6-12
Wing Latch Kit 6-13
- 40 ft and 50 ft 6-13
- 60 ft and 70 ft 6-14

Rear Tow Hitch

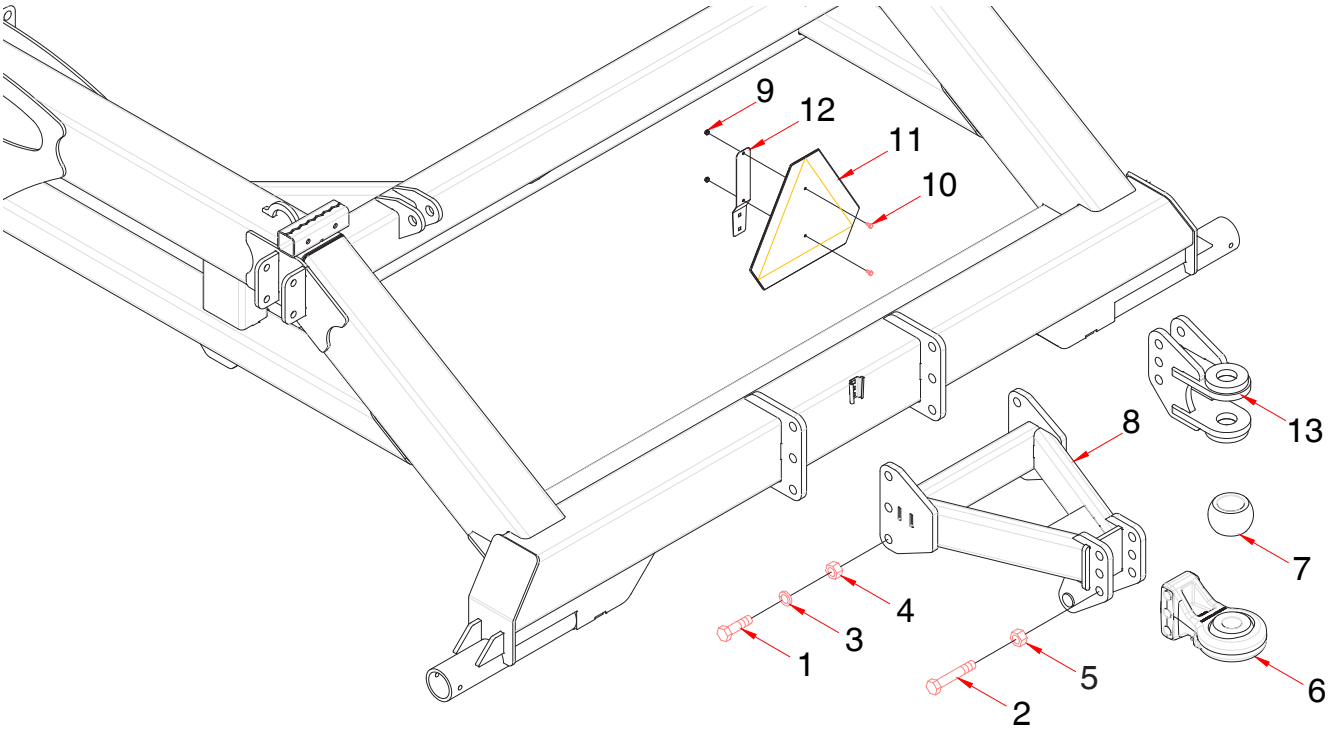

Item	Part No.	Description	Qty
1	J12344	Hex Bolt - 1 x 3 Lg.	3
2	S42952	Hex Bolt - 1 x 6 5/8 Lg.	3
3	C-705	Lockwasher - 1	3
4	W-520	Hex Nut - 1	3
5	D-5274	Lock Nut - 1 Unitorque	3
6	* * * * *	Clevis - Refer to **Clevis Options** page 1-56	
7	* * * * *	Clevis Insert - Refer to **Clevis Options** page 1-56	
8	S64355	Rear Tow Hitch	1
9	N22778	Locknut - 1/4 Nylon Insert	2
10	K-3830	Hex Bolt - 1/4 x 1/2 Lg.	2
11	N34475	SMV Sign	1
12	N34643	Spade Mount Bracket	1
13	N68790	Optional Clevis - (2 Diameter Draw Pin)	

Used to attach a Tow Behind Quad Steer Cart as follows:

Clevis CAT 4 - 1 1/2 Pin Diameter Draw Pin

- 9365, 9450 and 9535 Tow Behind Carts
- 9445, 9550 and 9650 Tow Behind Carts - Prior to 2018
- 9800 and 91000 Tow Behind Carts - Prior to 2018

Clevis CAT 5 - 2 Pin Diameter Draw Pin

or K62145 Clevis CAT 4 - 2 Diameter Draw Pin could be used.

- 9445, 9550 and 9650 Tow Behind Carts - 2018 to Present
- 9800 and 91000 Tow Behind Carts - 2018 to Present

Remote Clutch Switch

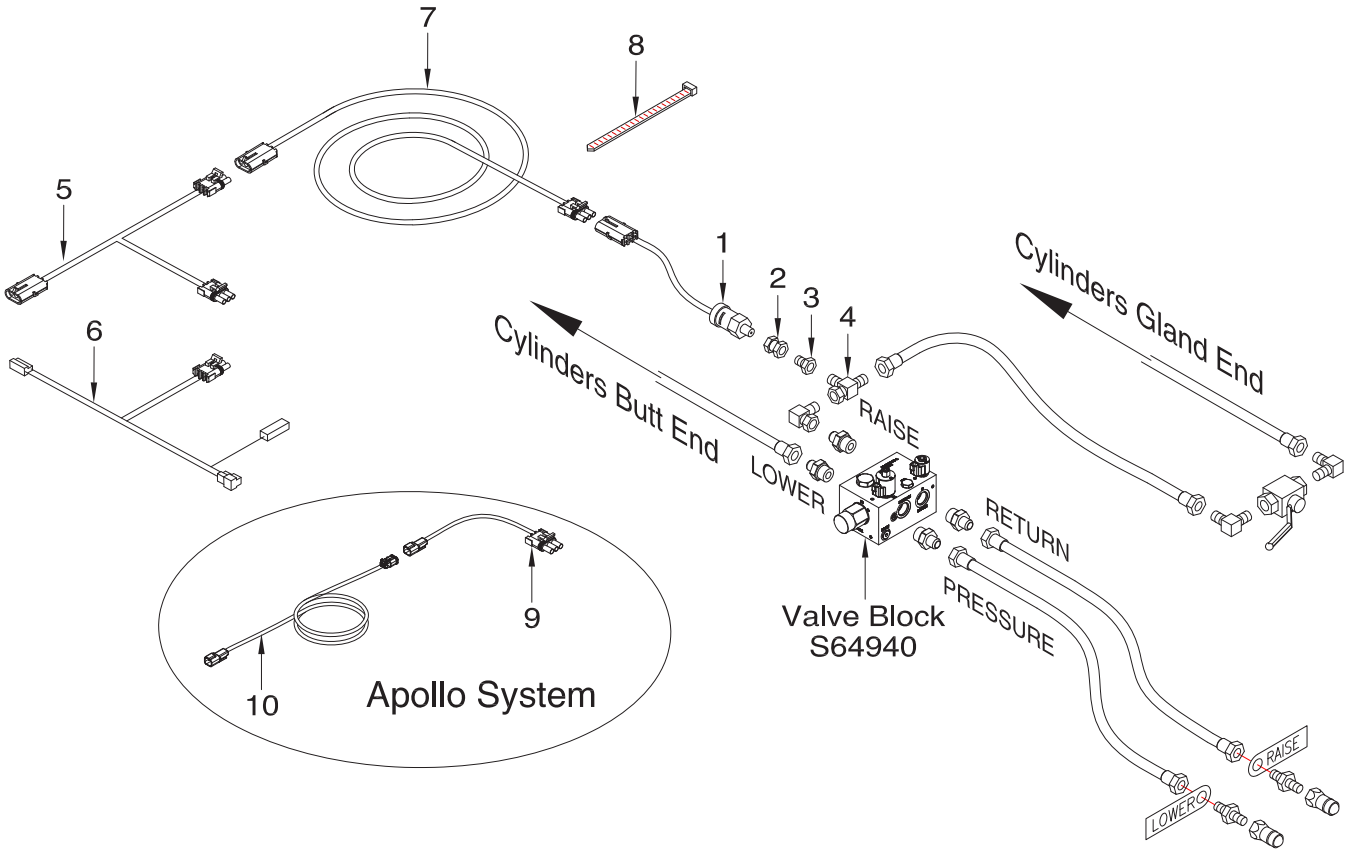

Item	Part No.	Description	Qty
		Ground Drive and Base X20 and X30 Systems	
1	S56558	Pressure Switch	1
2	S42998	Connector - 1/4 FNPT x 9/16-18 FJIC	1
3	F10384	Connector - 9/16-18 MJIC x 7/8-14 FJIC	1
4	H18746	Tee - Swivel - (2) 7/8-14 MJIC x (1) 7/8-14 FJIC	1
5	N32482	Connector - 'Y' Wire - Tow Behind ONLY - Weather Pak Ends	1
6	N32483	Connector - 'Y' Wire - Tow Between ONLY - Weather Pak Ends	1
7	N32457	Wire - Clutch Extension (Main) - 37 1/2 ft - Weather Pak Ends	1
8	S13336	Tie Strap	4
	S54297	Tow Between - Work Switch Kit (Includes Items 1, 2, 3, 4, 6, 7, and 8)	
	S54298	Tow Behind - Work Switch Kit (Includes Items 1, 2, 3, 4, 5, 7, and 8)	
		Apollo System - 2016	
1	S56558	Pressure Switch	1
2	S42998	Connector - 1/4 FNPT x 9/16-18 FJIC	1
3	F10384	Connector - 9/16-18 MJIC x 7/8-14 FJIC	1
4	H18746	Tee - Swivel - (2) 7/8-14 MJIC x (1) 7/8-14 FJIC	1
9	N60323	Harness Adaptor - Pressure Work Switch	1
10	N59010	Harness - Work Switch - 5 m	1

4th Row Kit
40 ft - 12m

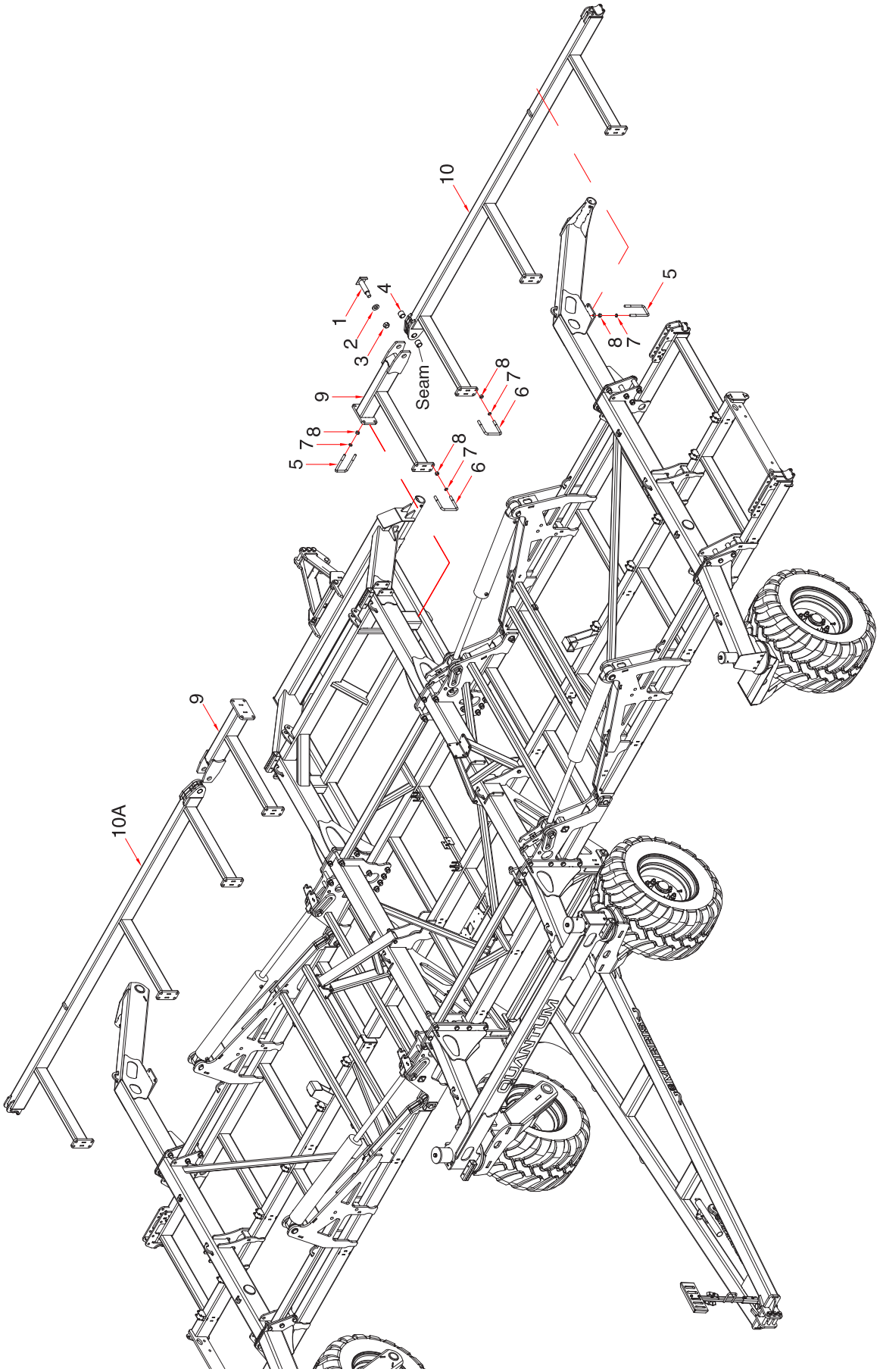

4th Row Kit - 40 ft - 12m			
Item	**Part No.**	**Description**	**Qty**
1	S64305	Pin - 1 3/4 x 5 1/2 Lg	2
2	S26462	Washer - 1 1/4 ID x 2 1/2 OD x 3/8 Thick	2
3	S39780	Lock Nut - 1 1/4 Unitorque	2
4	S64325	Bushing - Spring - 1.75 x 2.00 x 1.75 Lg Nominal Size	4
5	C26955	U-Bolt - 3/4 x 4 x 8 UL	8
6	S64958	U-Bolt - 3/4 x 6 1/16 x 6 1/4 UL	16
7	W-527	Lockwasher - 3/4	48
8	W-518	Hex Nut - 3/4	48
9	S65765	Draft Beam - Main	2
10	S65787	Draft Beam - Inner Left	1
10A	S65789	Draft Beam - Inner Right	1
	S65884	4th Row Kit - 40 ft (Includes all above items) Order through Whole Goods	

4th Row Kit
50 ft - 15m

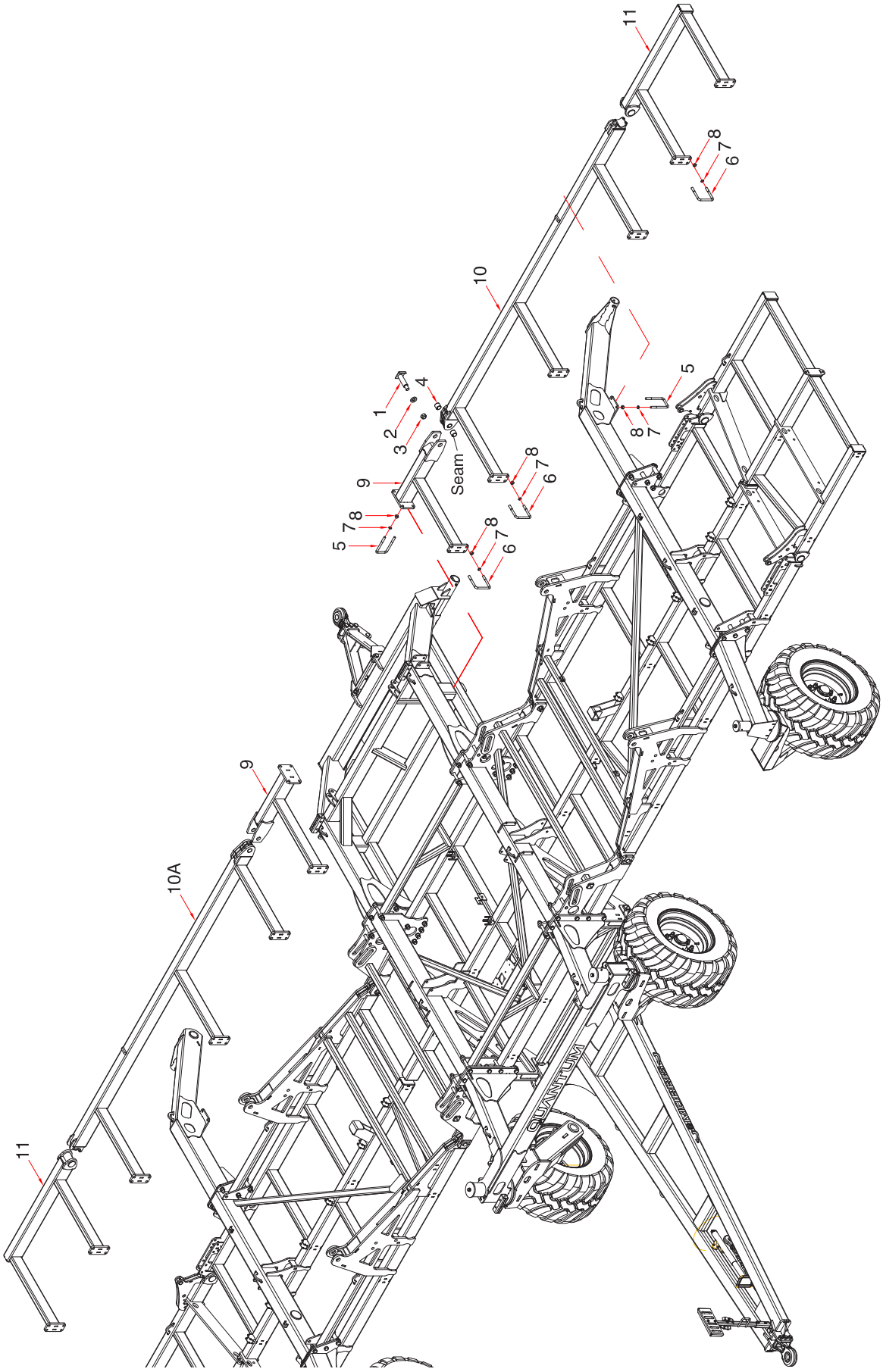

4th Row Kit - 50 ft - 15m			
Item	**Part No.**	**Description**	**Qty**
1	S64305	Pin - 1 3/4 x 5 1/2 Lg	2
2	S26462	Washer - 1 1/4 ID x 2 1/2 OD x 3/8 Thick	2
3	S39780	Lock Nut - 1 1/4 Unitorque	2
4	S64325	Bushing - Spring - 1.75 x 2.00 x 1.75 Lg Nominal Size	4
5	C26955	U-Bolt - 3/4 x 4 x 8 UL	8
6	S64958	U-Bolt - 3/4 x 6 1/16 x 6 1/4 UL	24
7	W-527	Lockwasher - 3/4	64
8	W-518	Hex Nut - 3/4	64
9	S65765	Draft Beam - Main	2
10	S65787	Draft Beam - Inner Left	1
10A	S65789	Draft Beam - Inner Right	1
11	S65791	Draft Beam - Flip Wing	2
	S65883	4th Row Kit - 50 ft (Includes all above items) Order through Whole Goods	

4th Row Kit
60 ft - 18m

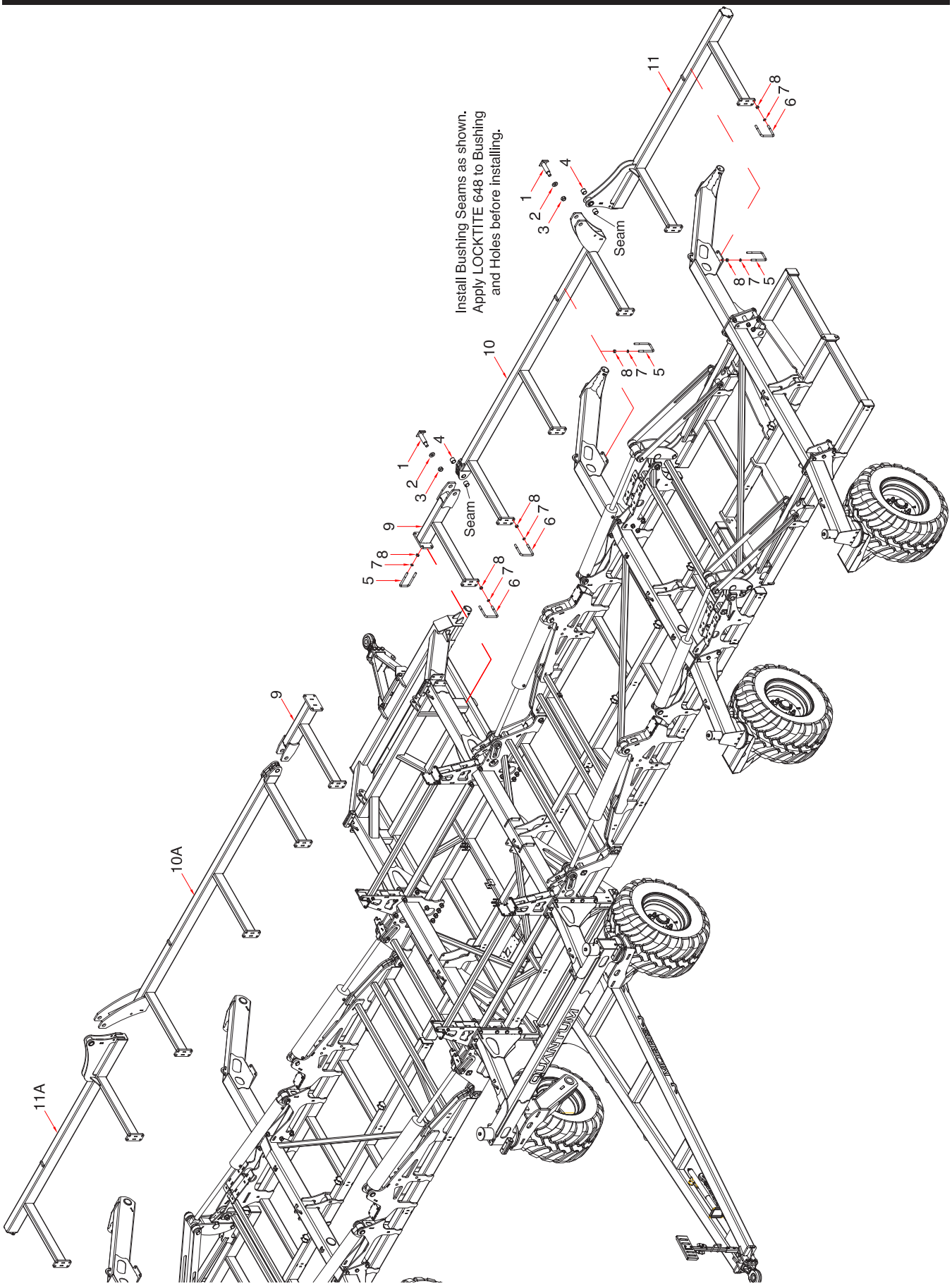

4th Row Kit - 60 ft - 18m			
Item	**Part No.**	**Description**	**Qty**
1	S64305	Pin - 1 3/4 x 5 1/2 Lg	4
2	S26462	Washer - 1 1/4 ID x 2 1/2 OD x 3/8 Thick	4
3	S39780	Lock Nut - 1 1/4 Unitorque	4
4	S64325	Bushing - Spring - 1.75 x 2.00 x 1.75 Lg Nominal Size	8
5	C26955	U-Bolt - 3/4 x 4 x 8 UL	12
6	S64958	U-Bolt - 3/4 x 6 1/16 x 6 1/4 UL	24
7	W-527	Lockwasher - 3/4	72
8	W-518	Hex Nut - 3/4	72
9	S65765	Draft Beam - Main	2
10	S65778	Draft Beam - Inner Left	1
10A	S65780	Draft Beam - Inner Right	1
11	S65782	Draft Beam - Outer Left	1
11A	S65784	Draft Beam - Outer Right	1
	S65882	4th Row Kit - 60 ft (Includes all above items) Order through Whole Goods	

4th Row Kit
70 ft - 21m

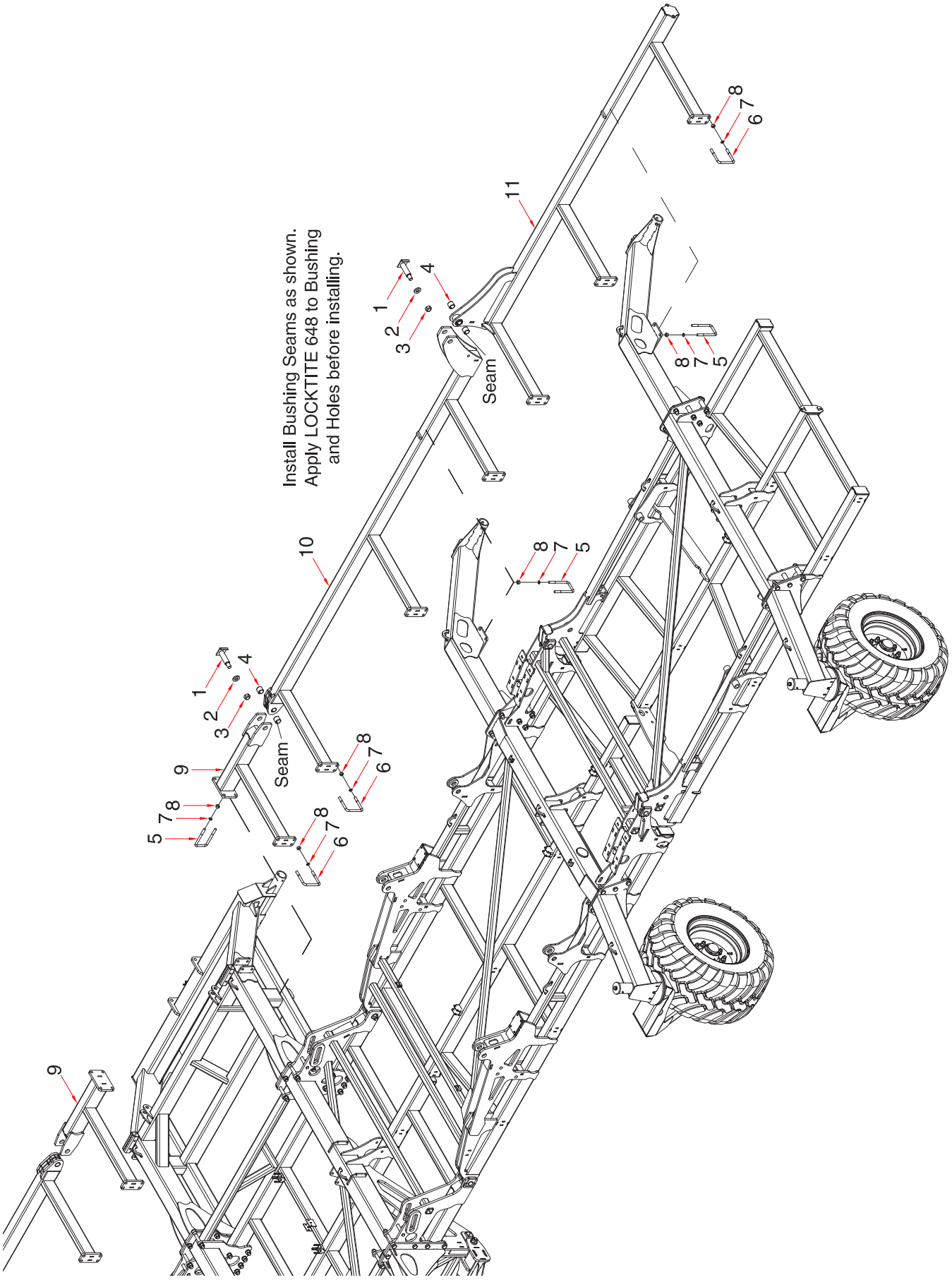

4th Row Kit - 70 ft - 21m			
Item	**Part No.**	**Description**	**Qty**
1	S64305	Pin - 1 3/4 x 5 1/2 Lg	4
2	S26462	Washer - 1 1/4 ID x 2 1/2 OD x 3/8 Thick	4
3	S39780	Lock Nut - 1 1/4 Unitorque	4
4	S64325	Bushing - Spring - 1.75 x 2.00 x 1.75 Lg Nominal Size	8
5	C26955	U-Bolt - 3/4 x 4 x 8 UL	12
6	S64958	U-Bolt - 3/4 x 6 1/16 x 6 1/4 UL	28
7	W-527	Lockwasher - 3/4	80
8	W-518	Hex Nut - 3/4	80
9	S65765	Draft Beam - Main	2
10	S65767	Draft Beam - Inner Left	1
10A	S65769	Draft Beam - Inner Right	1
11	S65771	Draft Beam - Outer Left	1
11A	S65773	Draft Beam - Outer Right	1
	S65881	4th Row Kit - 70 ft (Includes all above items) Order through Whole Goods	

Weight Kit

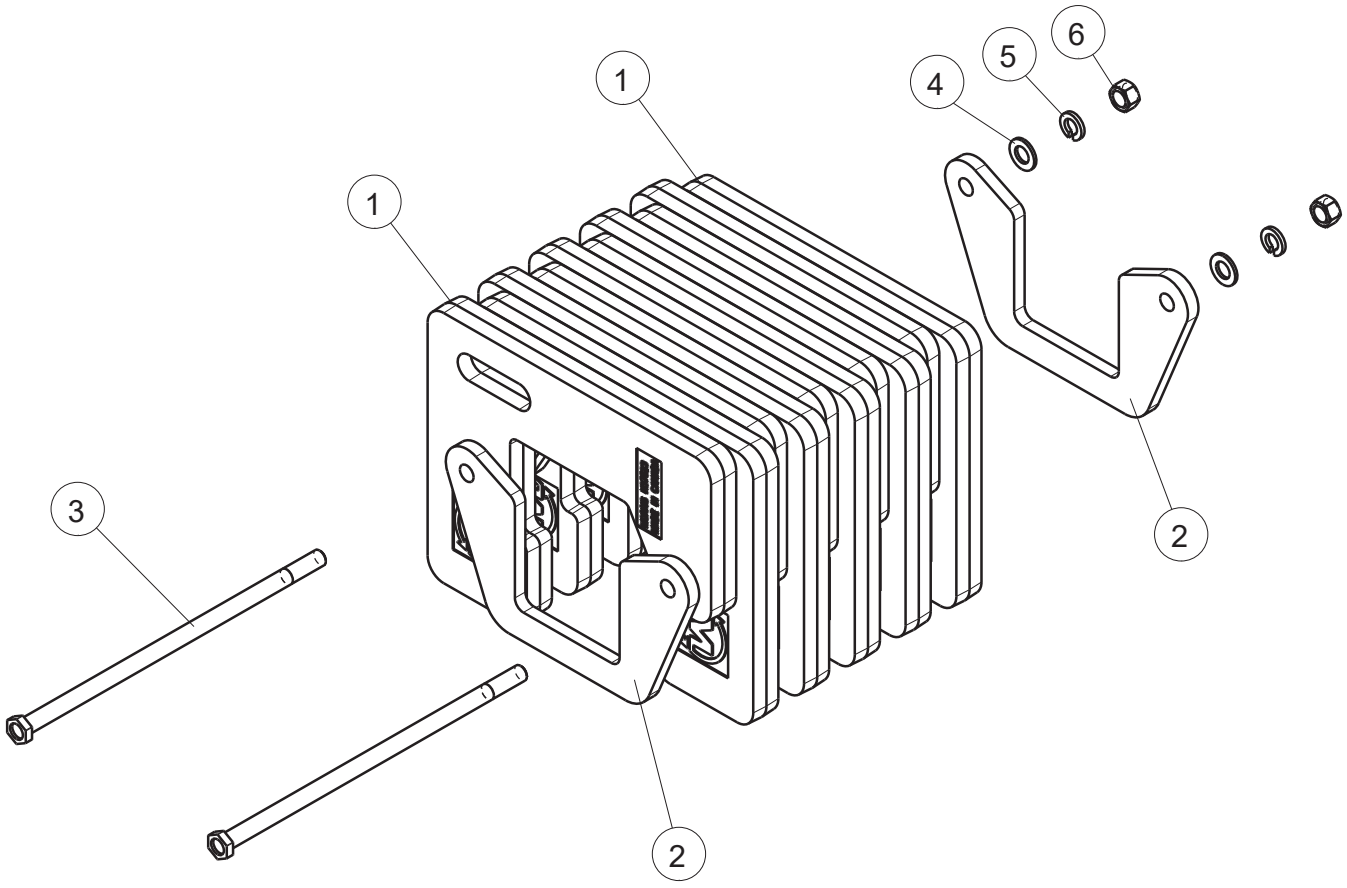

Note: Wrap Weights (1) around beam alternating left to right.
Mount on Inner Wing.

Item	Part No.	Description	Qty
1	N37523	Weight - 50lb	10
2	S65692	Weight Retainer Bracket	2
3	S65750	Rod - 3/4 Dia x 17 3/4 Lg	2
4	W-476	Flat Washer - 3/4	2
5	W-527	Lockwasher - 3/4	2
6	W-518	Hex Nut - 3/4	2
	S65755	Weight Kit (Includes all above items)	

Wing Latch Kit

40 ft and 50 ft

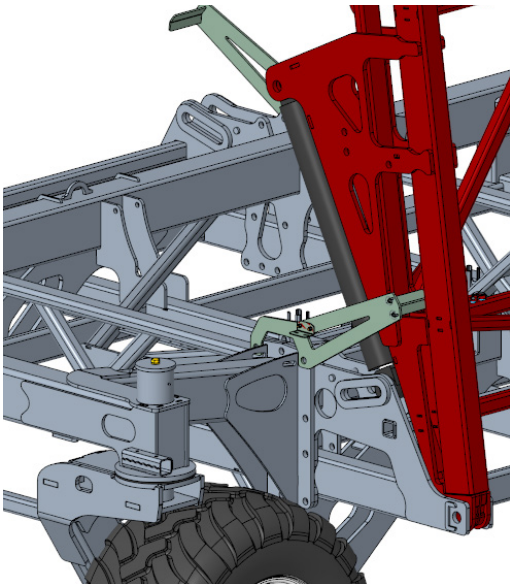

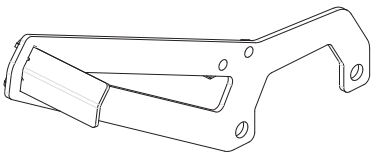

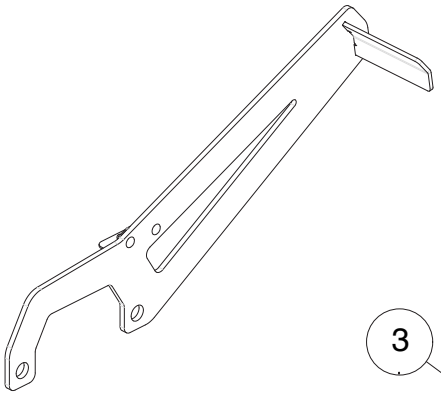

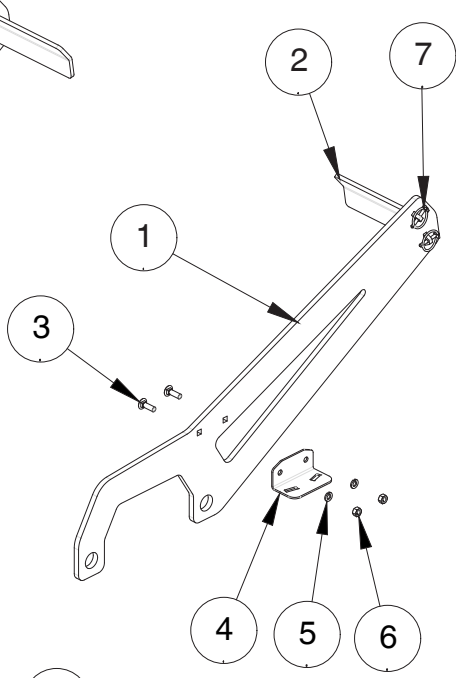

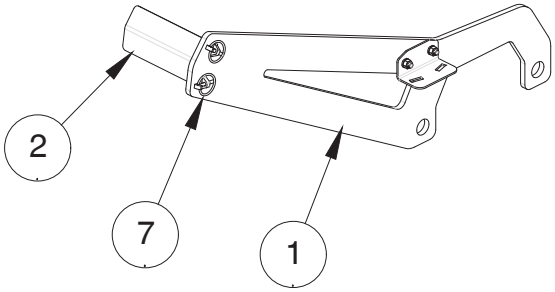

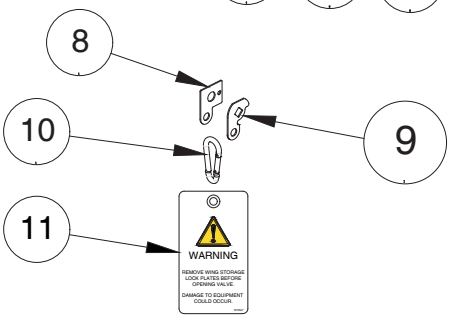

Item	Part No.	Description	Qty
1	S76630	Latch Bracket - 40’ and 50’	4
2	S76631	Latch Lock Plate - 40’ and 50’	4
3	S33420	Carriage Bolt - 5/16 x 1 Lg	8
4	S76801	Latch Hanger - 40’ and 50’	4
5	W-522	Lockwasher - 5/16	8
6	W-513	Hex Nut - 5/16	8
7	S42294	Lynch Pin - 3/16 Dia x 1 3/8 Lg wit 1 1/4 ID Ring (66450B)	8
8	S73913	Lock Plate Base	1
9	S73914	Lock Plate	1
10	H32520	Snap Hook	1
11	S75647	Wing Lock Warning Tag	1
	S76803	Wing Latch Kit - 40 ft and 50 ft (Includes all above items)	

Wing Latch Kit

60 ft and 70 ft

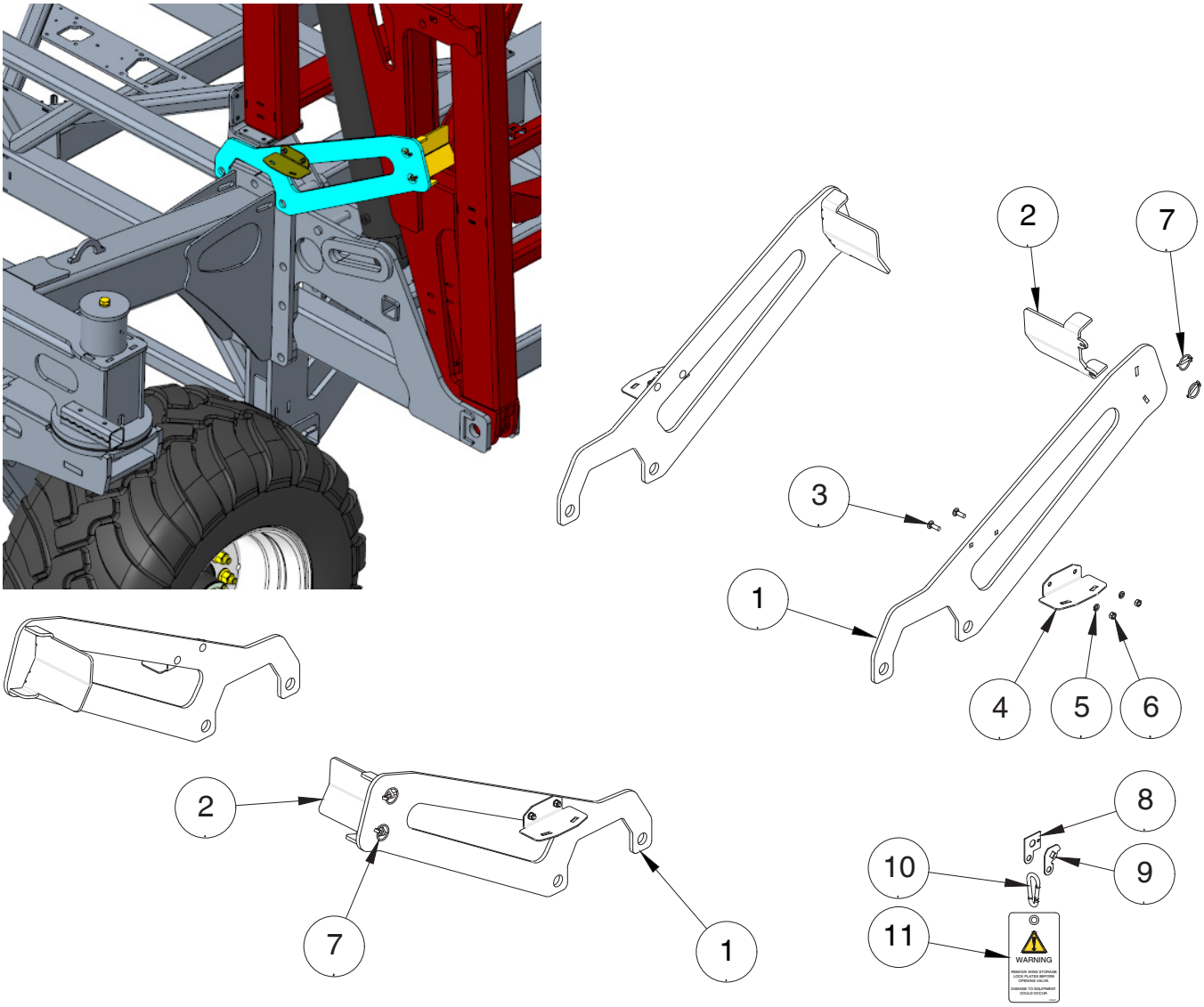

Item	Part No.	Description	Qty
1	S76632	Latch Bracket - 60’ and 70’	4
2	S76633	Latch Lock Plate - 60’ and 70’	4
3	S33420	Carriage Bolt - 5/16 x 1 Lg	8
4	S76802	Latch Hanger - 60’ and 70’	4
5	W-522	Lockwasher - 5/16	8
6	W-513	Hex Nut - 5/16	8
7	S42294	Lynch Pin - 3/16 Dia x 1 3/8 Lg wit 1 1/4 ID Ring (66450B)	8
8	S73913	Lock Plate Base	1
9	S73914	Lock Plate	1
10	H32520	Snap Hook	1
11	S75647	Wing Lock Warning Tag	1
	S76804	Wing Latch Kit - 60 ft and 70 ft (Includes all above items)	

Index

10229 5-31, 5-47, 5-87, 5-89, 5-91, 5-107, 5-109, 5-111
11547 1-7, 1-9, 1-11
11678 1-29, 1-33, 1-37, 1-49
11740 1-19, 4-37, 4-47

B

BW-10 1-13, 1-15, 1-17, 5-17, 5-19, 5-21, 5-23, 5-25, 5-27, 5-29, 5-33, 5-35, 5-37, 5-39, 5-41, 5-43, 5-45, 5-49, 5-51, 5-53, 5-55, 5-57, 5-59, 5-61, 5-63, 5-65, 5-67, 5-69, 5-71, 5-73, 5-75, 5-77, 5-79, 5-81, 5-83, 5-85, 5-93, 5-95, 5-97, 5-99, 5-101, 5-103, 5-105

C

C-219 5-31, 5-89, 5-91
C-695 1-7, 1-9, 1-11, 1-19, 1-21, 1-23, 1-25, 1-29, 1-31, 1-33, 1-35, 1-37, 1-39, 1-41, 1-43
C-705 1-13, 1-15, 1-17, 1-19, 1-21, 1-23, 1-25, 1-29, 1-31, 1-33, 1-35, 1-37, 1-39, 6-2
C-1471 1-51, 4-11, 4-53
C-1550 3-13, 4-57, 4-59
C-3918 4-3, 4-5, 4-7, 4-13, 5-89, 4-9, 5-91, 5-109, 5-111
C-3932 1-37, 5-53, 5-55, 5-17, 5-19, 1-19, 5-21, 5-23, 5-25, 5-27, 5-29, 5-31, 5-33, 5-35, 5-37, 5-39, 5-41, 5-43, 5-45, 5-47, 5-49, 5-51, 5-57, 5-59, 5-61, 5-63, 5-65, 5-67, 5-69, 5-71, 5-73, 5-75, 5-77, 5-79, 5-81, 5-83, 5-85, 5-87, 5-89, 5-91, 5-93, 5-95, 5-97, 5-99, 5-101, 5-103, 5-105, 5-107, 5-109, 5-111, 5-112
C-4262 4-49, 4-50
C-4393 4-19, 4-21, 4-23, 4-25, 4-27, 4-29, 4-31, 4-33, 4-35, 4-37, 4-39, 4-41, 4-43, 4-45, 4-47
C-4394 4-29, 4-31, 4-33, 4-35, 4-39, 4-41, 4-43, 4-45
C-4401 4-19, 4-21, 4-23, 4-25, 4-27, 4-29, 4-31, 4-33, 4-35, 4-37, 4-39, 4-41, 4-43, 4-45, 4-47, 4-50
C-4403 4-3, 4-5, 4-7, 4-9, 4-19, 4-21, 4-23, 4-25, 4-27, 4-29, 4-31, 4-33, 4-35, 4-37, 4-39, 4-41, 4-43, 4-45, 4-47, 4-50
C-4468 4-41, 4-50
C-4698 4-3, 4-5, 4-7, 4-9, 4-13, 4-29, 4-31, 4-33, 4-35, 4-37, 4-39, 4-41, 4-43, 4-45, 4-47
C14840 4-3, 4-5, 4-7, 4-9, 4-13, 4-19, 4-21, 4-23, 4-25, 4-27, 4-29, 4-31, 4-33, 4-35, 4-37, 4-39, 4-41, 4-43, 4-45, 4-47
C15319 4-13
C15348 4-3, 4-5, 4-7, 4-9, 4-11, 4-19, 4-21, 4-23, 4-25, 4-27, 4-29, 4-31, 4-33, 4-35, 4-37, 4-39, 4-41, 4-43, 4-45, 4-47
C15839 4-50
C18597 1-13, 1-15, 1-17, 1-19
C24585 4-3, 4-5, 4-7, 4-9, 4-19, 4-21, 4-23, 4-25, 4-27, 4-29, 4-31, 4-33, 4-35, 4-37, 4-39, 4-41, 4-43, 4-45, 4-47
C25809 1-7, 1-9, 1-11, 1-21, 1-23, 1-25, 1-29, 1-31, 1-33, 1-35, 1-37, 1-39
C25810 1-3, 1-5, 1-21, 1-25, 1-29, 1-31, 1-33, 1-35, 1-37, 1-39
C26321 1-3, 1-5
C26701 5-31, 5-87, 5-89, 5-91
C26955 , 6-5, 6-7, 6-9, 1-43
C28505 4-13
C29565 4-3, 4-5, 4-7, 4-9
C31439 1-54, 1-55
C32741 1-13, 1-15, 1-17, 1-19, 1-23, 1-25, 1-29, 1-33, 1-41
C32925 1-19, 4-37, 4-47
C39432 1-3, 1-5
C42311 4-49
C42312 4-49
C42313 4-49
C44461 4-52
C53847 4-60
C53848 4-60
C53849 4-3, 4-5, 4-7, 4-9, 4-60
C60599 4-52
C64546 4-49, 4-21, 4-52
C64920 1-45, 1-47, 1-49, 1-51, 4-3, 4-5, 4-7, 4-9
C64930 1-45, 1-47, 1-49, 1-51, 4-3, 4-5, 4-7, 4-9
C65366 1-27, 4-5
C65377 4-52
C65379 4-52
C66871 4-52
C66872 4-52
C66873 4-52
C68272 3-9, 4-52
C71900 3-7, 3-9, 4-52
C72090 3-9, 4-52, 4-24
C72344 1-41, 4-9
C72720 4-52, 4-24

D

D-4825 5-112
D-4838 4-13, 4-29, 4-31, 4-33, 4-35, 4-39, 4-41, 4-43, 4-45, 4-59
D-4932 1-11, 5-53, 5-55, 5-57, 5-17, 5-19, 5-21, 5-23, 5-25, 5-27, 5-29, 5-49, 5-51, 4-57, 4-59, 5-59, 5-73, 5-75, 5-77, 5-79, 5-81, 5-83, 5-85
D-4951 1-52, 4-9, 4-13, 4-37, 4-47, 1-53, 1-54, 1-55
D-5054 4-11
D-5238 2-5, 2-6
D-5239 1-9, 1-11
D-5243 3-20, 3-21, 3-22, 3-23
D-5247 2-5, 2-6
D-5260 3-18, 3-19
D-5261 3-20, 3-21, 3-22, 3-23
D-5265 5-8
D-5272 3-3, 3-5
D-5273 1-5, 1-11, 1-29, 1-33, 1-37, 1-49, 1-51, 3-3
D-5274 1-3, 1-5, 3-3, 3-5
D-5275 1-41, 3-7, 3-9
D-5277 5-4, 5-5, 5-10, 5-11, 5-13, 5-15
D-5278 1-52, 1-54, 1-55, 1-53, 4-13, 5-10, 5-11
D-5279 1-9, 4-19, 1-23, 1-25, 1-29, 1-33, 1-37, 1-41, 4-9, 4-11, 4-21, 4-23, 4-25, 4-27, 4-29, 4-31, 4-33, 4-35, 4-37, 4-39, 4-41, 4-43, 4-45, 4-47, 4-55, 4-57, 4-59, 5-4, 5-5
D-5280 1-52, 1-53, 1-54, 1-55
D-5488 4-13, 1-52, 1-54
D-5489 3-13, 4-57, 4-59
D-5519 1-7, 1-9, 1-11, 1-52, 1-53, 1-54, 1-55
D-5558 1-13, 1-39, 3-3
D12903 1-21, 1-23, 1-25, 1-29, 1-31, 1-33, 1-35, 1-37, 1-39, 3-5
D14565 1-19, 5-8

F

F-1767 2-7, 3-9
F-3056 1-3
F-3405 1-3, 1-5, 1-7, 1-9, 1-11, 1-21, 1-23, 1-25, 1-29, 1-31, 1-33, 1-35, 1-37, 1-39, 1-49, 1-52, 1-53, 1-54, 1-55, 3-12, 4-55
F-3867 4-19, 4-21, 4-23, 4-25, 4-27, 4-29, 4-31, 4-33, 4-35, 4-37, 4-39, 4-41, 4-43, 4-45
F-4490 3-3
F-4565 4-13
F-4642 4-49, 5-17, 5-19, 5-21, 5-23, 5-25, 5-27, 5-29, 5-49, 5-51, 5-53, 5-55, 5-57, 5-59, 5-73, 5-75, 5-77, 5-79, 5-81, 5-83, 5-85, 5-87
F10384 4-19, 4-21, 4-23, 4-25, 4-27, 4-29, 4-31, 4-33, 4-35, 4-39, 4-41, 4-43, 4-45, 4-49, 4-50, 4-37, 4-47
F24559 4-49

H

H-4408 4-29, 4-31, 4-33, 4-35, 4-39, 4-41, 4-43, 4-45
H-4410 4-49
H18269 4-29, 4-31, 4-33, 4-35, 4-39, 4-41, 4-43, 4-45
H18746 4-49, 6-3
H21437 5-31, 5-47, 5-87, 5-89, 5-91, 5-107, 5-109, 5-111

H25628 , 4-3, 4-5, 4-9, 4-13, 4-19, 4-21, 4-23, 4-25, 4-27, 4-29, 4-31, 4-33, 4-35, 4-39, 4-41, 4-43, 1-52, 5-67, 5-69, 5-71, 5-33, 5-35, 5-37, 4-37, 5-39, 5-41, 5-43, 5-45, 4-45, 4-47, 5-61, 5-63, 5-65, 5-93, 5-95, 5-97, 5-99, 5-101, 5-103, 5-105
H32520 6-13, 6-14

J

J12344 1-13, 1-15, 1-17, 1-19, 1-21, 1-29, 1-31, 1-33, 1-35, 6-2

K

K-3830 1-7, 1-9, 1-11, 6-2
K-3832 1-41
K-5806 4-3, 4-5, 4-7, 4-9, 4-19, 4-21, 4-23, 4-25, 4-27, 4-29, 4-31, 4-33, 4-35, 4-37, 4-39, 4-41, 4-43, 4-45, 4-47, 4-49, 4-50
K50834 4-13
K56777 2-2, 2-4
K62145 1-56
K62977 4-19, 4-21, 4-23, 4-25, 4-27, 4-29, 4-31, 4-33, 4-35, 4-37, 4-39, 4-41, 4-43, 4-45, 4-47, 4-53, 4-55, 4-57, 4-59
K65090 1-7, 1-21, 1-23, 1-25, 1-29, 1-31, 1-33, 1-35, 2-2, 2-4
K65091 1-7, 1-21, 1-23, 1-25, 1-29, 1-31, 1-33, 1-35, 2-2, 2-4
K65178 2-7
K65885 ii
K68627 1-41, 4-9
K72371 3-11, 3-13
K73230 4-15, 4-17

M

M-3388 1-27, 1-41, 1-45, 1-47, 1-49, 1-51, 3-9, 3-10, 3-13, 1-53, 1-55, 4-15, 4-17, 4-55, 4-57, 4-59, 5-13, 5-15, 5-31, 5-47, 5-87, 5-89, 5-91, 5-107, 5-109, 5-111

N

N11470 3-18, 3-19, 3-20, 3-21, 3-22, 3-23, 5-10, 5-11, 5-112
N11905 5-17, 5-19, 5-21, 5-23, 5-25, 5-27, 5-29, 5-33, 5-35, 5-37, 5-39, 5-41, 5-43, 5-45, 5-49, 5-51, 5-53, 5-55, 5-57, 5-59, 5-61, 5-63, 5-65, 5-67, 5-69, 5-71, 5-73, 5-75, 5-77, 5-79, 5-81, 5-83, 5-85, 5-93, 5-95, 5-97, 5-99, 5-101, 5-103, 5-105
N13956 2-6
N13959 2-5, 2-6
N13962 1-9, 1-11, 1-27, 1-47, 2-5, 2-6
N13968 2-2, 2-3, 2-4
N14009 3-10, 3-11, 3-12, 3-13
N14011 3-10, 3-11, 3-12, 3-13
N15098 4-57, 4-59, 5-31, 5-47, 5-87, 5-89, 5-91, 5-107, 5-109, 5-111
N15757 1-13, 1-15, 1-17, 1-19, 1-23, 1-25, 1-29, 1-33, 1-41, 1-47, 1-49
N15990 4-15, 4-17
N16143 4-3, 4-5, 4-7, 4-9
N16257 4-3, 4-5, 4-7, 4-9, 4-13
N16608 4-13
N19428 5-17, 5-19, 5-21, 5-23, 5-25, 5-27, 5-29, 5-31, 5-33, 5-35, 5-37, 5-39, 5-41, 5-43, 5-45, 5-47, 5-49, 5-51, 5-53, 5-55, 5-57, 5-59, 5-61, 5-63, 5-65, 5-67, 5-69, 5-71, 5-73, 5-75, 5-77, 5-79, 5-81, 5-83, 5-85, 5-87, 5-89, 5-91, 5-93, 5-95, 5-97, 5-99, 5-101, 5-103, 5-105, 5-107, 5-109, 5-111
N19458 4-13
N19484 1-9, 1-11, 2-5, 2-6
N19578 4-19, 4-21, 4-23, 4-25, 4-27, 4-29, 4-31, 4-33, 4-35, 4-37, 4-39, 4-41, 4-43, 4-45, 4-47
N19678 , 4-3, 4-9, 4-13, 4-15, 4-17, 1-53, 1-55
N19723 1-9, 4-50, 5-59, 5-13, 5-15, 5-25, 5-27, 5-29, 5-31, 5-41, 5-43, 5-45, 5-47, 5-57, 5-69, 5-71, 5-81, 5-83, 5-85, 5-87, 5-89, 5-91, 5-101, 5-103, 5-105, 5-107, 5-109, 5-111
N22778 1-7, 1-9, 1-11, 1-51, 4-11
N27709 5-8
N29048 1-52, 1-53, 1-54, 1-55
N29358 4-19, 4-21, 4-23, 4-25, 4-27, 4-29, 4-31, 4-33, 4-35, 4-37, 4-39, 4-41, 4-43, 4-45, 4-47
N31012 3-7
N31016 5-4, 5-5
N31908 4-3, 4-5, 4-7, 4-9
N32457 6-3
N32482 6-3
N32483 6-3
N33243 2-7
N33244 2-7
N33245 2-7
N33547 2-7
N33548 2-7
N33549 2-7
N33550 2-7
N34319 4-3, 4-5, 4-7, 4-9, 4-11, 4-19, 4-21, 4-23, 4-25, 4-27, 4-29, 4-31, 4-33, 4-35, 4-37, 4-39, 4-41, 4-43, 4-45, 4-47
N34443 4-3, 4-5, 4-7, 4-9, 4-13, 4-19, 4-21, 4-23, 4-25, 4-27, 4-29, 4-31, 4-33, 4-35, 4-37, 4-39, 4-41, 4-43, 4-45, 4-47
N34475 1-7, 1-9, 1-11, 6-2
N34476 1-7, 1-9, 1-11, 1-52, 1-53, 1-54, 1-55
N34477 1-7, 1-9, 1-11, 1-52, 1-53, 1-54, 1-55
N34478 1-7, 1-9, 1-11, 1-52, 1-53, 1-54, 1-55
N34488 4-13, 4-15, 4-17
N34498 4-15, 4-17
N34505 4-13, 4-19
N34576 4-13
N34577 4-13
N34578 4-13
N34643 1-7, 1-9, 1-11, 6-2
N34646 4-13
N34836 5-6, 5-7
N36597 5-6, 5-7
N37523 6-12
N37787 3-20, 3-21, 3-22, 3-23
N37914 4-13, 4-15, 4-17
N37915 4-13, 4-15, 4-17
N37920 5-25, 5-27, 5-29, 5-31, 5-41, 5-43, 5-45, 5-57, 5-59, 5-69, 5-71, 5-81, 5-83, 5-85, 5-87, 5-89, 5-91, 5-101, 5-103, 5-105
N40735 5-4, 5-5
N42098 5-6, 5-7
N42213 5-4, 5-5, 5-10, 5-11
N42880 4-3, 4-5, 4-7, 4-9, 4-11, 4-19, 4-21, 4-23, 4-25, 4-27, 4-29, 4-31, 4-33, 4-35, 4-37, 4-39, 4-41, 4-43, 4-45, 4-47
N42881 4-3, 4-5, 4-7, 4-9, 4-19, 4-21, 4-23, 4-25, 4-27, 4-29, 4-31, 4-33, 4-35, 4-37, 4-39, 4-41, 4-43, 4-45, 4-47
N44710 1-3, 1-5
N45644 4-53
N47903 4-19, 4-21, 4-23, 4-25, 4-27, 4-29, 4-31, 4-33, 4-35, 4-37, 4-39, 4-41, 4-43, 4-45, 4-47
N48126 4-23, 4-25, 4-39, 4-41
N50365 1-11, 1-52, 1-53, 1-54, 1-55
N50366 1-11, 1-52, 1-53, 1-54, 1-55
N50842 5-13, 5-15, 5-25, 5-41, 5-57, 5-69, 5-81, 5-101
N51955 5-5
N51960 5-5
N51962 5-33, 5-35, 5-37, 5-39, 5-41, 5-43, 5-45, 5-47, 5-93, 5-95, 5-97, 5-99, 5-101, 5-103, 5-105, 5-107, 5-109, 5-111
N51983 5-4
N53200 5-4
N53203 5-17, 5-19, 5-21, 5-23, 5-25, 5-27, 5-29, 5-31, 5-49, 5-51, 5-53, 5-55, 5-57, 5-59, 5-73, 5-75, 5-77, 5-79, 5-81, 5-83, 5-85, 5-87, 5-89, 5-91
N53207 5-4
N53209 5-5
N53211 4-3, 4-5, 4-7, 4-9
N53215 5-4, 5-5, 5-10, 5-11
N53696 4-19, 4-21, 4-23, 4-29, 4-37, 4-39, 4-41, 4-43, 4-45, 4-47
N53713 ii
N53715 ii
N54295 4-13

N55218 2-5, 2-6
N55450 ii
N55452 ii
N55453 ii
N56957 4-3, 4-5, 4-7, 4-9
N58340 4-13
N58341 4-13
N58342 4-13
N58343 4-13
N58670 4-13
N58671 1-3, 1-5, 4-13
N59010 , 4-55, 4-57
N60323 6-3
N64092 5-19, 5-21, 5-23, 5-25, 5-27, 5-29, 5-31, 5-41, 5-43, 5-45, 5-47, 5-51, 5-53, 5-55, 5-57, 5-59, 5-71, 5-75, 5-77, 5-79, 5-81, 5-83, 5-85, 5-87, 5-103, 5-105, 5-107
N64094 5-17, 5-19, 5-21, 5-23, 5-25, 5-27, 5-29, 5-31, 5-35, 5-37, 5-39, 5-41, 5-47, 5-49, 5-51, 5-53, 5-55, 5-57, 5-59, 5-63, 5-65, 5-67, 5-69, 5-73, 5-75, 5-77, 5-79, 5-81, 5-83, 5-85, 5-87, 5-89, 5-91, 5-95, 5-97, 5-99, 5-101, 5-107, 5-109, 5-111
N64095 5-17, 5-19, 5-21, 5-23, 5-25, 5-27, 5-29, 5-31, 5-33, 5-35, 5-37, 5-39, 5-41, 5-43, 5-45, 5-47, 5-49, 5-51, 5-53, 5-55, 5-57, 5-59, 5-61, 5-63, 5-65, 5-67, 5-69, 5-71, 5-73, 5-75, 5-77, 5-79, 5-81, 5-83, 5-85, 5-87, 5-89, 5-91, 5-93, 5-95, 5-97, 5-99, 5-101, 5-103, 5-105, 5-107, 5-109, 5-111
N64096 5-27, 5-29, 5-43, 5-45, 5-59, 5-71, 5-83, 5-85, 5-103, 5-105
N64099 5-17, 5-19, 5-21, 5-23, 5-25, 5-27, 5-29, 5-31, 5-33, 5-35, 5-37, 5-39, 5-41, 5-43, 5-45, 5-47, 5-49, 5-51, 5-53, 5-55, 5-57, 5-59, 5-61, 5-63, 5-65, 5-67, 5-69, 5-71, 5-73, 5-75, 5-77, 5-79, 5-81, 5-83, 5-85, 5-87, 5-89, 5-91, 5-93, 5-95, 5-97, 5-99, 5-101, 5-103, 5-105, 5-107, 5-109, 5-111
N64583 4-61, 4-62
N64671 4-55, 4-57
N64747 4-13, 1-52, 1-54
N65131 5-10, 5-11
N65140 4-53
N65141 4-53
N65142 4-53
N65143 4-53
N65145 4-53
N65146 4-53
N65147 4-53
N65148 4-53
N65149 4-53
N65385 5-13
N66092 5-69, 5-101
N66140 5-13
N66141 5-13, 5-93
N66175 5-10, 5-11
N66176 5-10
N66177 5-10
N66178 5-11
N66179 5-11
N66180 5-11
N66234 5-61, 5-63, 5-65, 5-67, 5-69, 5-71
N66321 5-17, 5-19, 5-21, 5-23, 5-25, 5-27, 5-29, 5-31, 5-47, 5-49, 5-51, 5-53, 5-55, 5-57, 5-59, 5-73, 5-75, 5-77, 5-79, 5-81, 5-83, 5-85, 5-87, 5-89, 5-91, 5-107, 5-109, 5-111
N66322 5-47, 5-49, 5-51, 5-53, 5-55, 5-57, 5-59, 5-73, 5-75, 5-77, 5-79, 5-81, 5-83, 5-85, 5-107, 5-109, 5-111
N66325 5-17, 5-19, 5-21, 5-23, 5-25, 5-27, 5-29, 5-49, 5-51, 5-53, 5-55, 5-57, 5-59, 5-73, 5-75, 5-77, 5-79, 5-81, 5-83, 5-85
N66335 5-17, 5-19, 5-21, 5-23, 5-25, 5-27, 5-29, 5-49, 5-51, 5-53, 5-55, 5-57, 5-59, 5-73, 5-75, 5-77, 5-79, 5-81, 5-83, 5-85
N66339 5-17, 5-19, 5-21, 5-23, 5-25, 5-27, 5-29, 5-31, 5-33, 5-35, 5-37, 5-39, 5-41, 5-43, 5-45, 5-47, 5-49, 5-51, 5-53, 5-55, 5-57, 5-59, 5-61, 5-63, 5-65, 5-67, 5-69, 5-71, 5-73, 5-75, 5-77, 5-79, 5-81, 5-83, 5-85, 5-87, 5-89, 5-91, 5-93, 5-95, 5-97, 5-99, 5-101, 5-103, 5-105, 5-107, 5-109, 5-111
N66358 5-27, 5-29, 5-31, 5-43, 5-45, 5-47, 5-53, 5-55, 5-65, 5-67, 5-77, 5-79, 5-87, 5-89, 5-91, 5-97, 5-99, 5-107, 5-109, 5-111
N66359 5-17, 5-19, 5-21, 5-23, 5-25, 5-27, 5-29, 5-31, 5-33, 5-35, 5-37, 5-39, 5-41, 5-43, 5-45, 5-47, 5-49, 5-51, 5-53, 5-55, 5-57, 5-59, 5-61, 5-63, 5-65, 5-67, 5-69, 5-71, 5-73, 5-75, 5-77, 5-79, 5-81, 5-83, 5-85, 5-87, 5-89, 5-91, 5-93, 5-95, 5-97, 5-99, 5-101, 5-103, 5-105, 5-107, 5-109, 5-111
N66374 5-23, 5-25, 5-39, 5-41, 5-55, 5-57, 5-67, 5-69, 5-79, 5-81, 5-99, 5-101
N66375 5-23, 5-25, 5-39, 5-41, 5-55, 5-57, 5-67, 5-69, 5-79, 5-81, 5-99, 5-101
N66395 1-23, 1-25, 5-23, 5-25, 5-27, 5-29, 5-39, 5-41, 5-43, 5-45, 5-55, 5-57, 5-59, 5-67, 5-69, 5-71, 5-79, 5-81, 5-83, 5-85, 5-99, 5-101, 5-103, 5-105
N66396 5-17, 5-21, 5-23, 5-27, 5-29, 5-31, 5-33, 5-37, 5-39, 5-43, 5-45, 5-47, 5-49, 5-53, 5-55, 5-59, 5-61, 5-65, 5-67, 5-71, 5-73, 5-77, 5-79, 5-83, 5-85, 5-87, 5-89, 5-91, 5-93, 5-97, 5-99, 5-103, 5-105, 5-107, 5-109, 5-111
N66506 5-10, 5-17, 5-21, 5-25, 5-29, 5-33, 5-37, 5-41, 5-45, 5-49, 5-53, 5-57, 5-59, 5-61, 5-65, 5-69, 5-71, 5-73, 5-77, 5-81, 5-85, 5-93, 5-97, 5-101, 5-105
N66507 5-10, 5-17, 5-21, 5-23, 5-25, 5-27, 5-29, 5-33, 5-37, 5-39, 5-41, 5-43, 5-45, 5-49, 5-53, 5-55, 5-57, 5-59, 5-61, 5-65, 5-67, 5-69, 5-71, 5-73, 5-77, 5-79, 5-81, 5-83, 5-85, 5-93, 5-97, 5-99, 5-101, 5-103, 5-105
N66508 5-11, 5-17, 5-19, 5-23, 5-25, 5-27, 5-29, 5-31, 5-33, 5-35, 5-39, 5-41, 5-43, 5-45, 5-47, 5-49, 5-51, 5-55, 5-57, 5-59, 5-61, 5-63, 5-67, 5-69, 5-71, 5-73, 5-75, 5-79, 5-81, 5-83, 5-85, 5-87, 5-89, 5-91, 5-93, 5-95, 5-99, 5-101, 5-103, 5-105, 5-107, 5-109, 5-111
N66509 5-11, 5-23, 5-25, 5-27, 5-29, 5-31, 5-39, 5-41, 5-43, 5-45, 5-47, 5-55, 5-57, 5-59, 5-67, 5-69, 5-71, 5-79, 5-81, 5-83, 5-85, 5-87, 5-89, 5-91, 5-99, 5-101, 5-103, 5-105, 5-107, 5-109, 5-111
N66510 5-11, 5-27, 5-29, 5-31, 5-43, 5-45, 5-47, 5-59, 5-71, 5-83, 5-85, 5-87, 5-89, 5-91, 5-103, 5-105, 5-107, 5-109, 5-111
N66516 5-10
N66517 5-10
N66518 5-11
N66519 5-11
N66520 5-11
N66556 5-10
N66557 5-10
N66558 5-11
N66559 5-11
N66560 5-11
N66662 5-11
N66663 5-11
N66672 5-11
N66673 5-11
N66772 5-109
N66775 5-57, 5-59, 5-69, 5-71, 5-81, 5-83, 5-85, 5-87, 5-101, 5-103, 5-105, 5-107
N66855 5-57, 5-59, 5-69, 5-71, 5-81, 5-83, 5-85, 5-87, 5-101, 5-103, 5-105, 5-107
N66860 5-59, 5-71, 5-83, 5-85, 5-87, 5-103, 5-105, 5-107
N67037 4-55, 4-57
N67038 4-55, 4-57, 4-59
N67045 4-55, 4-57, 4-59

N67046 4-55, 4-57, 4-59
N67051 4-55, 4-57
N67052 4-55, 4-57
N67200 5-13, 5-15, 5-17, 5-21, 5-23, 5-25, 5-33, 5-37, 5-39, 5-41, 5-49, 5-53, 5-55, 5-57, 5-61, 5-65, 5-67, 5-69, 5-73, 5-77, 5-79, 5-81, 5-93, 5-97, 5-99, 5-101
N67202 5-13, 5-15, 5-17, 5-21, 5-23, 5-25, 5-33, 5-37, 5-39, 5-41, 5-49, 5-53, 5-55, 5-57, 5-61, 5-65, 5-67, 5-69, 5-73, 5-77, 5-79, 5-81, 5-93, 5-97, 5-99, 5-101
N67245 5-33, 5-35, 5-37, 5-39, 5-41, 5-43, 5-45, 5-47, 5-61, 5-63, 5-65, 5-67, 5-69, 5-71, 5-93, 5-95, 5-97, 5-99, 5-101, 5-103, 5-105, 5-107, 5-109, 5-111
N67274 5-33, 5-35, 5-37, 5-39, 5-41, 5-43, 5-45, 5-61, 5-63, 5-65, 5-67, 5-69, 5-71, 5-93, 5-95, 5-97, 5-99, 5-101, 5-103, 5-105
N67275 5-33, 5-35, 5-37, 5-39, 5-41, 5-43, 5-45, 5-61, 5-63, 5-65, 5-67, 5-69, 5-71, 5-93, 5-95, 5-97, 5-99, 5-101, 5-103, 5-105
N67500 1-52, 1-54
N67640 5-13, 5-15, 5-27, 5-29, 5-31, 5-43, 5-45, 5-47, 5-59, 5-71, 5-75, 5-79, 5-83, 5-85, 5-87, 5-89, 5-91, 5-95, 5-103, 5-105, 5-107, 5-109, 5-111
N67798 4-55, 4-57
N68000 4-55, 4-57, 4-59
N68001 4-55, 4-57, 4-59
N68002 4-55, 4-57
N68388 4-13
N68390 4-13
N68395 4-13
N68790 6-2
N68950 4-55, 4-57
N69294 5-17, 5-19, 5-21, 5-23, 5-25, 5-27, 5-29, 5-31, 5-33, 5-35, 5-37, 5-39, 5-41, 5-43, 5-45, 5-47, 5-73, 5-75, 5-77, 5-79, 5-81, 5-83, 5-85, 5-87, 5-89, 5-91, 5-93, 5-95, 5-97, 5-99, 5-101, 5-103, 5-105, 5-107, 5-109, 5-111
N69768 4-15, 4-17
N69804 4-15, 4-17
N69879 4-15, 4-17
N70812 2-7
N70813 2-7
N70814 2-7
N70816 2-7
N70874 1-11, 2-7
N71511 5-15
N72030 4-55, 4-57, 4-59
N72160 5-11
N72163 5-10
N72166 5-10
N72169 5-11
N72172 5-11
N72180 4-53
N72181 4-53
N72541 4-53
N72542 4-53
N72543 4-53
N72592 5-73, 5-75, 5-77, 5-79, 5-81, 5-83, 5-85, 5-87, 5-89, 5-91, 5-93, 5-95, 5-97, 5-99, 5-101, 5-103, 5-105, 5-107, 5-109, 5-111
N72719 5-15, 5-75, 5-77, 5-81, 5-95, 5-97, 5-101
N72832 5-31, 5-87, 5-89, 5-91
N72833 5-31, 5-47, 5-87, 5-89, 5-91, 5-107, 5-109, 5-111
N72834 5-31, 5-47, 5-87, 5-89, 5-91, 5-107, 5-109, 5-111
N72996 5-10, 5-11
N73068 5-31, 5-47, 5-87, 5-89, 5-91, 5-107, 5-109, 5-111
N73085 5-17, 5-19, 5-21, 5-23, 5-25, 5-27, 5-29, 5-31, 5-33, 5-35, 5-37, 5-39, 5-41, 5-43, 5-45, 5-47, 5-73, 5-75, 5-77, 5-79, 5-81, 5-83, 5-85, 5-87, 5-89, 5-91, 5-93, 5-95, 5-97, 5-99, 5-101, 5-103, 5-105, 5-107, 5-109, 5-111, 5-112
N73186 5-107, 5-109, 5-111
N73189 5-107, 5-109, 5-111
N73733 4-15, 4-17
N73748 4-15, 4-17
N73749 4-15, 4-17
N73796 4-15
N73797 4-17
N73798 4-15
N73799 4-17
N74222 4-59
N74261 4-59
N74299 1-7, 1-11
N74321 4-15, 4-17
N74324 4-17
N74325 4-17
N74326 4-15, 4-17
N74327 4-15, 4-17
N74330 4-15, 4-17
N74331 4-15, 4-17
N74334 4-15, 4-17
N74340 1-7, 1-11
N74900 1-7, 1-11
N74902 1-7, 1-11
N74903 1-7, 1-11
N74998 1-53, 1-55, 4-15, 4-17
N75610 4-15, 4-17, 4-19
N75611 4-15, 4-17
N75612 4-15, 4-17
N75613 4-15, 4-17
N75705 ii
N75706 ii
N75708 ii
N75770 5-11, 5-73, 5-75, 5-77, 5-79, 5-81, 5-83, 5-85, 5-87, 5-89, 5-91, 5-93, 5-95, 5-97, 5-99, 5-101, 5-103, 5-105, 5-107, 5-109, 5-111
N75771 5-11, 5-17, 5-19, 5-21, 5-23, 5-25, 5-27, 5-29, 5-31, 5-33, 5-35, 5-37, 5-39, 5-41, 5-43, 5-45, 5-47, 5-73, 5-75, 5-77, 5-79, 5-81, 5-83, 5-85, 5-87, 5-89, 5-91, 5-93, 5-95, 5-97, 5-99, 5-101, 5-103, 5-105, 5-107, 5-109, 5-111
N75812 5-17, 5-19, 5-21, 5-23, 5-25, 5-27, 5-29, 5-31, 5-33, 5-35, 5-37, 5-39, 5-41, 5-43, 5-45, 5-47, 5-73, 5-75, 5-77, 5-79, 5-81, 5-83, 5-85, 5-87, 5-89, 5-91, 5-93, 5-95, 5-97, 5-99, 5-101, 5-103, 5-105, 5-107, 5-109, 5-111
N75813 5-73, 5-75, 5-77, 5-79, 5-81, 5-83, 5-85, 5-87, 5-89, 5-91, 5-93, 5-95, 5-97, 5-99, 5-101, 5-103, 5-105, 5-107, 5-109, 5-111
N75920 5-6
N75921 5-6
N75925 5-6
N75930 5-7
N75931 5-7
N75932 5-6
N75933 5-7
N75935 5-7
N75939 5-6, 5-7
N75940 5-6, 5-7
N75943 5-8
N75945 5-8, 5-101, 5-103, 5-105, 5-111
N76122 5-6
N76123 5-7
N76255 5-6, 5-7
N76396 5-8
N76398 5-8
N76500 5-6, 5-7
N76501 5-6, 5-7
N76502 5-6, 5-7
N76550 2-7

P

P7C616 4-15, 4-17
P61D20 1-3, 1-5

R

R480034 5-11, 5-17, 5-19, 5-21, 5-23, 5-25, 5-27, 5-29, 5-33, 5-35, 5-37, 5-39, 5-41, 5-43, 5-45, 5-49, 5-51, 5-53, 5-55, 5-57, 5-59, 5-61, 5-63, 5-65, 5-67, 5-69, 5-71, 5-73, 5-75, 5-77, 5-79, 5-81, 5-83, 5-85, 5-93, 5-95, 5-97, 5-99, 5-101, 5-103, 5-105, 5-112
R480055 5-49, 5-51, 5-53, 5-55, 5-57, 5-59, 5-61, 5-63, 5-65, 5-67, 5-69, 5-71
R480060 5-49, 5-51, 5-53, 5-55, 5-57, 5-59, 5-61, 5-63, 5-65, 5-67, 5-69, 5-71

S

S-711 4-19, 4-21, 4-23, 4-25, 4-27, 4-29, 4-31, 4-33, 4-35, 4-37, 4-39, 4-41, 4-43, 4-45, 4-47
S-752 1-5, 1-7, 1-9, 1-11, 1-

21, 1-23, 1-25, 1-29, 1-31, 1-33, 1-35, 1-37, 1-39, 2-5, 2-6, 2-7, 3-10, 3-11, 3-12, 3-13
S-766 5-31, 5-47, 5-87, 5-89, 5-91, 5-107, 5-109, 5-111
S-776 5-112
S-951 1-7, 1-9, 1-11, 1-21, 1-23, 1-25, 1-29, 1-31, 1-33, 1-35, 1-37, 1-39
S-1175 1-29, 1-33, 1-37, 1-49, 1-51
S-1189 1-43
S-1191 1-15, 1-23, 1-25
S-1299 5-13, 5-15, 5-25, 5-41, 5-57, 5-69, 5-81, 5-101
S-1925 1-29, 1-33, 1-37, 1-49
S-1934 5-112
S13336 1-52, 1-54, 1-55, 4-29, 4-31, 4-33, 4-35, 4-39, 4-41, 4-43, 1-53, 4-45
S13337 4-13
S26462 1-3, 1-5, 1-21, 1-23, 1-25, 1-29, 1-31, 1-33, 1-35, 1-37, 1-39, 1-41, 6-5, 6-9, 6-11, 1-43
S27987 1-11, 1-37, 3-15, 3-16, 3-17, 3-18, 3-19, 3-20, 3-21, 3-22, 3-23, 4-3, 4-5, 4-7, 4-9, 4-13, 4-15, 4-17, 4-29, 4-31, 4-33, 4-35, 4-37, 4-39, 4-41, 4-43, 4-45, 4-47, 4-50, 4-57, 4-59, 5-8, 5-17, 5-19, 5-21, 5-23, 5-25, 5-27, 5-29, 5-31, 5-33, 5-35, 5-37, 5-39, 5-41, 5-43, 5-45, 5-47, 5-49, 5-51, 5-53, 5-55, 5-57, 5-59, 5-61, 5-63, 5-65, 5-67, 5-69, 5-71, 5-73, 5-75, 5-77, 5-79, 5-81, 5-83, 5-85, 5-87, 5-89, 5-91, 5-93, 5-95, 5-97, 5-99, 5-101, 5-103, 5-105, 5-107, 5-109, 5-111
S28159 4-15, 4-17
S29958 4-19, 4-21, 4-23, 4-25, 4-27, 4-29, 4-31, 4-33, 4-35, 4-37, 4-39, 4-41, 4-43, 4-45, 4-47
S29959 4-19, 4-21, 4-23, 4-25, 4-27, 4-29, 4-31, 4-33, 4-35, 4-37, 4-39, 4-41, 4-43, 4-45, 4-47
S29960 4-3, 4-5, 4-7, 4-9
S29961 4-3, 4-5, 4-7, 4-9
S29967 4-3, 4-5, 4-7, 4-9, 4-19, 4-21, 4-23, 4-25, 4-27, 4-29, 4-31, 4-33, 4-35, 4-37, 4-39, 4-41, 4-43, 4-45, 4-47
S31980 3-19
S32590 1-11
S33420 , 5-4, 5-5, 6-13
S34465 1-9
S39391 1-3, 1-5
S39539 4-3, 4-5, 4-7, 4-9
S39548 4-11
S39549 4-11
S39649 5-53, 3-5, 5-8, 5-17, 5-19, 5-21, 5-23, 5-25, 5-27, 5-29, 5-33, 5-35, 5-37, 5-39, 5-41, 5-43, 5-45, 5-47, 5-49, 5-51, 5-55, 5-57, 5-59, 5-61, 5-63, 5-65, 5-67, 5-69, 5-71, 5-73, 5-75, 5-77, 5-79, 5-81, 5-83, 5-85, 5-93, 5-95, 5-97, 5-99, 5-101, 5-103, 5-105, 5-107, 5-109, 5-111
S39665 1-3, 1-5
S39780 1-3, 1-5, 1-21, 1-23, 1-25, 1-29, 1-31, 1-33, 1-35, 1-37, 1-39, 1-41, 6-5, 6-9, 6-11, 1-43
S42294 3-3, 3-5, 6-13
S42865 3-18, 3-19
S42952 1-3, 1-5, 3-3, 3-5
S42965 3-20, 3-21
S42967 4-19, 4-21, 4-27, 4-29, 4-31, 4-33, 4-35, 4-37
S42969 4-23, 4-25, 4-39, 4-41, 4-43, 4-45, 4-47
S42998 4-49, 6-3
S44300 3-14
S44353 4-7, 4-9, 4-23, 4-25, 4-35, 4-39, 4-41, 4-43, 4-45, 4-47
S44468 4-13
S44715 1-3, 1-5
S44716 1-3, 1-5
S44717 1-3, 1-5
S44900 3-14
S44930 4-49, 4-50
S44932 4-49, 4-50
S44976 3-23
S44977 3-22
S45269 3-19
S45312 3-20, 3-21, 3-22, 3-23
S45313 3-20, 3-21, 3-22, 3-23
S45470 3-20, 3-21
S45796 1-27
S46181 3-20, 3-22, 3-23
S46384 3-21
S47076 3-15, 3-16, 3-17, 3-20, 3-21, 3-22, 3-23
S47093 3-14
S47095 4-49
S47110 3-3, 5-87, 3-5, 5-31, 5-47, 5-89, 5-91, 5-107, 5-109, 5-111, 5-112
S47128 3-20, 3-21, 3-22, 3-23
S47337 3-19
S47593 3-12, 4-55
S47597 4-11
S47799 4-19, 4-27, 4-29, 4-31, 4-33, 4-35, 4-37, 4-39, 4-41, 4-43, 4-45, 4-47, 4-50
S47973 4-19, 4-21, 4-23, 4-25, 4-27, 4-29, 4-31, 4-33, 4-35, 4-37, 4-39, 4-41, 4-43, 4-45, 4-47
S47980 3-20, 3-21, 3-22, 3-23
S48813 3-21
S48814 3-15, 3-16, 3-17, 3-21
S48842 3-10, 3-11, 3-12, 3-13
S48843 3-10, 3-11, 3-12, 3-13
S48844 3-10, 3-11, 3-12, 3-13
S48845 4-49
S48846 3-10, 3-11
S48847 3-10, 3-11, 3-12, 3-13
S48848 3-10, 3-11, 3-12, 3-13
S48849 3-10, 3-11, 3-12, 3-13
S48850 3-9, 3-10, 3-11
S49260 3-3, 3-5
S49536 3-22
S49537 3-23
S50245 3-20, 3-21, 3-22, 3-23
S50246 3-3, 3-5, 3-10, 3-11, 3-12, 3-13
S50247 3-3, 3-5, 3-10, 3-11, 3-12, 3-13
S51464 3-3, 3-5
S51466 3-3, 3-5
S51469 3-22
S51470 3-23
S54297 6-3
S54298 6-3
S55498 1-7, 1-9, 1-11
S55629 1-9, 1-11
S55639 1-9, 1-11
S56482 3-16
S56483 3-17
S56485 3-15
S56558 6-3
S58157 4-19, 4-21, 4-23, 4-25, 4-27, 4-29, 4-31, 4-33, 4-35, 4-37, 4-39, 4-41, 4-43, 4-45, 4-47
S59806 3-9
S62722 1-3, 1-5
S62723 1-3, 1-5
S62986 3-7
S62998 3-7
S64119 3-7
S64172 3-7
S64194 3-3, 3-14
S64195 3-3, 3-14
S64200 1-7, 1-13, 1-15, 1-17
S64210 1-21, 1-23, 1-25, 1-29, 1-31, 1-33, 1-35, 1-37, 1-39
S64225 1-7, 1-13, 1-15, 1-17
S64240 1-3, 1-13, 1-15, 1-17
S64250 1-33
S64260 1-35
S64270 1-35
S64273 1-3
S64290 1-33
S64300 1-56
S64303 1-21, 1-23, 1-25, 1-29, 1-31, 1-33, 1-35, 1-37, 1-39
S64305 1-21, 1-23, 1-25, 1-29, 1-31, 1-33, 1-35, 1-37, 1-39, 6-5, 6-9, 6-11, 1-43
S64310 1-56
S64314 1-47
S64316 1-45, 1-47, 1-49, 1-51
S64325 1-3, 1-5, 1-21, 1-23, 1-25, 1-29, 1-31, 1-33, 1-35, 1-37, 1-39, 1-41, 1-47, 6-5, 6-9, 6-11, 1-43
S64327 1-45, 1-47, 1-49, 1-51
S64335 1-21, 1-23, 1-25, 1-29, 1-31, 1-33, 1-35, 1-37, 1-39
S64355 6-2
S64360 1-3, 1-5
S64390 1-17
S64416 1-13, 1-15, 1-17, 1-19, 1-23, 1-25, 1-29, 1-33, 1-41

S64672 3-7
S64673 3-3, 3-10
S64698 3-3
S64759 3-7
S64900 1-7, 1-52, 1-53
S64905 1-45, 1-47, 1-49, 1-51
S64909 1-47
S64910 1-45, 1-47, 1-49, 1-51
S64911 1-47
S64912 1-45, 1-47, 1-49, 1-51
S64914 1-47
S64918 1-47, 1-49, 1-51
S64940 4-55, 4-61
S64944 1-21, 1-23, 1-25, 1-29, 1-31, 1-33, 1-35, 1-37, 1-39
S64947 2-2, 2-4
S64948 1-7, 1-9, 1-11
S64949 2-2, 2-4
S64950 1-7, 1-9, 1-11
S64955 1-7, 1-9, 1-11
S64958 , 1-39, 6-5, 6-7, 6-9, 1-43
S64959 1-47
S64960 1-7, 2-2, 2-4
S64961 1-29, 1-37
S64963 1-29, 1-37
S64967 1-31
S64969 1-31
S64970 2-5, 1-21, 1-23, 1-25, 1-29, 1-31, 1-33, 1-35, 1-7
S64994 1-15
S64995 1-15
S64998 2-5
S64999 2-5
S65000 3-3
S65009 3-7, 3-9
S65037 3-7
S65038 3-7
S65039 3-7
S65048 3-7
S65061 3-3, 3-5
S65070 3-3
S65074 3-15, 3-16, 3-17
S65128 4-3, 4-5, 4-7, 4-9, 4-13
S65129 4-3, 4-5, 4-7, 4-9, 4-19, 4-21, 4-23, 4-25, 4-27, 4-29, 4-31, 4-33, 4-35, 4-37, 4-39, 4-41, 4-43, 4-45, 4-47
S65150 1-7, 1-9, 1-11
S65151 1-7, 1-9, 1-11
S65152 1-7, 1-9, 1-11
S65153 1-7, 1-9, 1-11, 1-13, 1-15, 1-17, 1-19, 1-27, 1-29, 1-33, 1-37, 1-39
S65154 1-7, 1-9, 1-11
S65155 1-7, 1-9, 1-11
S65156 4-3, 4-5, 4-7, 4-9
S65157 4-19, 4-21, 4-23, 4-25, 4-27, 4-29, 4-31, 4-33, 4-35, 4-37, 4-39, 4-41, 4-43, 4-45, 4-47
S65305 1-21, 1-23, 1-25
S65310 1-21, 1-23, 1-25
S65330 1-13
S65332 2-5
S65333 2-5, 2-6
S65334 2-5
S65335 2-5, 2-6
S65336 2-5, 2-6
S65337 2-5
S65339 2-5, 2-6
S65340 1-23
S65345 1-23
S65350 1-27
S65355 1-27
S65360 1-15
S65365 1-23
S65367 1-27
S65368 1-27
S65369 1-27
S65370 1-17
S65372 1-27
S65374 1-27
S65375 1-13
S65380 4-27
S65382 5-13, 5-19, 5-21, 5-25, 5-35, 5-37, 5-41, 5-51, 5-53, 5-57, 5-63, 5-65, 5-69
S65390 5-13, 5-15, 5-17, 5-23, 5-29, 5-33, 5-39, 5-45, 5-49, 5-55, 5-59, 5-61, 5-67, 5-71, 5-73, 5-79, 5-85, 5-93, 5-99, 5-105
S65397 4-5, 4-19, 4-27, 4-29, 4-31, 4-33, 4-35, 4-47
S65398 4-3, 4-5, 4-7, 4-47
S65407 4-7, 4-21, 4-25, 4-27, 4-31, 4-33, 4-35, 4-37, 4-39, 4-41, 4-43, 4-45, 4-47
S65408 4-3, 4-5, 4-7, 4-9, 4-47
S65409 4-3, 4-5, 4-7, 4-33, 4-35, 4-43
S65411 4-5
S65419 4-3, 4-5, 4-7, 4-37, 4-45
S65420 4-7, 4-9, 4-19, 4-21, 4-23, 4-25, 4-27, 4-29, 4-31, 4-33, 4-35, 4-39, 4-41, 4-43, 4-45
S65421 4-3, 4-5, 4-7, 4-9
S65437 4-27, 4-29, 4-31, 4-33, 4-35, 4-37, 4-39, 4-41, 4-45, 4-47
S65650 3-3
S65651 3-3
S65668 4-19, 4-21, 4-23, 4-25, 4-27, 4-29, 4-31, 4-33, 4-35, 4-37, 4-39, 4-41, 4-43, 4-45, 4-47
S65670 4-19, 4-21, 4-23, 4-25, 4-27, 4-29, 4-31, 4-33, 4-35, 4-37, 4-39, 4-41, 4-43, 4-45, 4-47
S65673 4-13, 1-52, 1-54
S65692 6-12
S65735 4-13
S65738 1-56
S65740 1-56
S65742 1-56
S65750 6-12
S65755 6-12
S65765 6-5, 6-7, 6-9, 6-11
S65767 6-11
S65769 6-11
S65771 6-11
S65773 6-11
S65778 , 1-43
S65780 , 1-43
S65782 6-9
S65784 6-9
S65787 6-5, 6-7
S65789 6-5, 6-7
S65791 6-7
S65799 1-52, 1-53, 1-54, 1-55
S65821 3-3
S65851 3-3
S65852 3-3
S65881 6-11
S65883 6-7
S65884 6-5
S66015 1-19, 4-37, 4-47
S66171 3-3, 3-5
S66236 1-56
S66243 4-19, 4-21, 4-23, 4-25, 4-27, 4-29, 4-31, 4-33, 4-35, 4-37, 4-39, 4-41, 4-43, 4-45, 4-47
S66245 3-3, 4-19, 4-21, 3-5, 4-17, 4-23, 4-25, 4-27, 4-29, 4-31, 4-33, 4-35, 4-37, 4-39, 4-41, 4-43, 4-45, 4-47
S66246 1-7, 1-9, 1-11
S66251 3-7, 3-9
S66255 1-23
S66267 3-12, 4-55
S66278 3-12, 4-55
S66294 1-7
S66295 1-21, 1-23, 1-25, 1-29, 1-31, 1-33, 1-35, 1-37, 1-39
S66296 1-7
S66297 1-21, 1-23, 1-25, 1-29, 1-31, 1-33, 1-35, 1-37, 1-39
S66337 3-3, 3-5
S66338 3-3, 3-5
S66403 3-3, 3-5
S66430 1-13, 1-15, 1-17, 5-17, 5-19, 5-21, 5-23, 5-25, 5-27, 5-29, 5-33, 5-35, 5-37, 5-39, 5-41, 5-43, 5-45, 5-49, 5-51, 5-53, 5-55, 5-57, 5-59, 5-61, 5-63, 5-65, 5-67, 5-69, 5-71, 5-73, 5-75, 5-77, 5-79, 5-81, 5-83, 5-85, 5-93, 5-95, 5-97, 5-99, 5-101, 5-103, 5-105
S66435 1-13, 1-15, 1-17, 5-17, 5-19, 5-21, 5-23, 5-25, 5-27, 5-29, 5-33, 5-35, 5-37, 5-39, 5-41, 5-43, 5-45, 5-49, 5-51, 5-53, 5-55, 5-57, 5-59, 5-61, 5-63, 5-65, 5-67, 5-69, 5-71, 5-73, 5-75, 5-77, 5-79, 5-81, 5-83, 5-85, 5-93, 5-95, 5-97, 5-99, 5-101, 5-103, 5-105
S66436 4-23, 4-25, 4-27, 4-33, 4-43
S66437 4-25, 4-27
S66438 4-21, 4-31, 4-33, 4-35, 4-43
S66442 1-3, 1-5
S66474 1-21, 1-23, 1-25, 1-29, 1-31, 1-33, 1-35, 1-37, 1-39
S66476 1-21, 1-23, 1-25, 1-29, 1-31, 1-33, 1-35, 1-37, 1-39
S66754 4-19, 4-21, 4-23, 4-25, 4-27, 4-29, 4-31, 4-33, 4-35, 4-37, 4-39, 4-41, 4-43, 4-45, 4-47
S66755 4-19, 4-21, 4-23, 4-25, 4-27, 4-29, 4-31, 4-33, 4-35, 4-37, 4-39, 4-41, 4-43, 4-45, 4-47
S66758 4-19, 4-21, 4-23, 4-

25, 4-27, 4-29, 4-31, 4-33, 4-35, 4-37, 4-39, 4-41, 4-43, 4-45, 4-47
S67170 3-3, 4-19, 4-21, 3-5, 4-17, 4-23, 4-25, 4-27, 4-29, 4-31, 4-33, 4-35, 4-37, 4-39, 4-41, 4-43, 4-45, 4-47
S67250 1-13, 1-15, 1-17, 5-17, 5-19, 5-21, 5-23, 5-25, 5-27, 5-29, 5-33, 5-35, 5-37, 5-39, 5-41, 5-43, 5-45, 5-49, 5-51, 5-53, 5-55, 5-57, 5-59, 5-61, 5-63, 5-65, 5-67, 5-69, 5-71, 5-73, 5-75, 5-77, 5-79, 5-81, 5-83, 5-85, 5-93, 5-95, 5-97, 5-99, 5-101, 5-103, 5-105
S67303 3-9
S67304 3-9
S67305 3-9
S67316 4-61
S67317 4-61, 4-62
S67318 4-61, 4-62
S67319 4-61, 4-62
S67320 4-61, 4-62
S67388 1-56
S67473 1-15, 1-17, 1-41, 1-47, 1-49
S67474 1-15, 1-17, 1-47, 1-49
S67475 1-15, 1-17, 1-47, 1-49
S67549 3-9
S67613 3-9
S67715 3-12, 4-55
S67716 3-12, 4-55
S67885 3-12, 4-55
S67899 1-7, 1-9, 1-11
S67944 3-5
S68006 4-19, 4-21, 4-23, 4-25, 4-27, 4-29, 4-31, 4-33, 4-35, 4-37, 4-39, 4-41, 4-43, 4-45, 4-47, 4-55, 4-57, 4-59, 4-62
S68007 4-62
S68008 4-62
S68009 3-3
S68142 4-49
S68273 3-3
S68415 1-25, 1-29, 1-33, 1-37, 4-19, 4-21, 4-23, 4-25, 4-27, 4-29, 4-31, 4-33, 4-35, 4-37, 4-39, 4-41, 4-43, 4-45, 4-47
S68655 2-2, 2-4
S68660 1-7, 1-21, 1-23, 1-25, 1-29, 1-31, 1-33, 1-35, 1-37, 1-39, 2-2, 2-4
S68805 1-25
S68809 1-25
S68920 4-5
S68925 4-5
S68999 1-49
S69044 4-61
S69047 1-49, 1-51
S69115 3-3
S69118 1-49, 1-51
S69154 3-12, 4-55
S69305 3-5
S69349 3-3
S69360 3-9
S69398 3-7, 3-9
S69573 1-41
S69574 3-9
S69598 3-9
S69720 4-50
S69721 4-50
S69855 1-55, 4-15, 4-17
S69859 4-15, 4-17
S71726 3-5
S71729 4-50
S71730 4-50
S71731 4-50
S71732 4-50
S71733 4-50
S71738 3-12, 4-55
S71846 3-5
S71923 1-29, 1-33, 1-37, 1-49, 1-51
S72042 3-7
S72046 3-9
S72060 3-9, 3-11, 3-13
S72061 3-7, 3-9
S72065 3-9, 3-11
S72075 3-14
S72080 2-6, 1-7, 1-9, 1-11, 1-21, 1-25, 1-29, 1-31, 1-33, 1-35, 1-37, 1-39, 1-23
S72081 2-6
S72082 2-6
S72083 2-6
S72084 2-6
S72094 3-13, 4-57, 4-59
S72185 3-15
S72190 3-13, 4-57, 4-59
S72200 3-13, 4-57, 4-59
S72292 3-13, 4-57, 4-59
S72297 3-5
S72302 3-5
S72303 3-5
S72306 3-15
S72308 3-17
S72309 3-16
S72310 3-18, 3-19, 3-20, 3-21, 3-22, 3-23
S72321 3-3, 3-5, 3-15
S72322 3-3, 3-5, 3-15
S72323 3-3, 3-5, 3-17
S72324 3-3, 3-5, 3-16
S72325 3-3, 3-5, 3-18
S72391 5-31, 5-47, 5-87, 5-89, 5-91, 5-107, 5-109, 5-111
S72395 5-112
S72398 5-31, 5-47, 5-87, 5-89, 5-91, 5-107, 5-109, 5-111
S72410 1-41
S72420 5-112
S72421 5-112
S72422 5-112
S72428 5-112
S72429 5-112
S72431 5-112
S72470 1-43
S72480 1-39
S72485 1-39
S72490 1-9, 1-11
S72497 1-9, 1-11
S72499 1-9, 1-11
S72600 1-5, 1-19
S72630 1-5
S72636 1-5
S72638 1-41, 1-43
S72640 1-39, 1-41
S72650 1-39, 1-41
S72655 1-39, 1-41
S72660 1-39, 1-41
S72670 1-41
S72675 1-41
S72680 1-41
S72683 1-41
S72684 1-41
S72685 1-19
S72698 1-19
S72700 1-9, 1-11, 1-54, 1-55
S72735 1-51, 4-11
S72770 4-11
S72772 1-51
S72825 1-9, 1-11, 2-3
S72826 2-3
S72827 2-3
S72835 1-43
S72840 1-43
S72842 1-39, 1-43
S72860 1-9, 1-11, 1-19
S72875 1-9
S72946 1-51, 4-11
S72948 1-41, 4-9
S72949 1-37, 4-9
S72970 1-39, 1-41
S72979 5-31, 5-47, 5-87, 5-107
S73086 3-14
S73105 4-11
S73107 ii
S73108 1-51
S73110 1-9, 1-11, 1-54, 1-55
S73139 1-5
S73152 4-9
S73153 4-9
S73154 4-9
S73155 4-9
S73156 4-9
S73157 4-9
S73158 4-9
S73159 4-9
S73160 4-9
S73161 4-9
S73224 5-112
S73260 3-7
S73263 4-57, 4-59
S73264 4-57, 4-59
S73265 4-57, 4-59
S73284 3-9
S73310 3-14
S73330 1-11, 1-19
S73367 2-3
S73368 2-3
S73369 1-11, 2-3
S73371 1-11, 2-3
S73373 1-19
S73374 3-5
S73390 4-37, 4-47
S73391 4-47
S73392 5-112
S73602 4-15, 4-17
S73603 4-15, 4-17
S73604 4-15, 4-17
S73680 3-7
S73685 3-7
S73724 1-53, 4-15, 4-17
S73725 3-7, 3-12
S73732 1-53, 4-15, 4-17
S73828 , 1-54
S73874 4-13
S73913 6-13, 6-14
S73914 6-13, 6-14
S74156 5-109, 5-111
S74901 1-11
S75647 6-13, 6-14
S76465 1-37
S76544 5-112
S76545 5-112
S76546 5-112
S76630 6-13
S76631 6-13
S76632 6-14
S76633 6-14
S76801 6-13
S76802 6-14
S76803 6-13

S76804 6-14
S76835 1-56
S76836 1-56
S76837 1-56
S76838 1-56
S76845 1-56
S76846 1-56
S76847 1-56
S76848 1-56
S76885 3-14
S76950 2-4
S76951 2-4
S76952 2-4

T

T-5245 1-27, 1-45, 1-47, 1-49, 1-51

W

W-187 1-27, 1-41, 5-53, 5-55, 5-57, 5-59, 4-9, 5-13, 5-15, 5-17, 5-19, 5-21, 5-23, 5-25, 5-27, 5-29, 5-31, 5-33, 5-35, 5-37, 5-39, 5-41, 5-43, 5-45, 5-47, 5-49, 5-51, 5-53, 4-55, 4-57, 4-59, 5-61, 5-63, 5-65, 5-67, 5-69, 5-71, 5-73, 5-75, 5-77, 5-79, 5-81, 5-83, 5-85, 5-87, 5-89, 5-91, 5-93, 5-95, 5-97, 5-99, 5-101, 5-103, 5-105, 5-107, 5-109, 5-111
W-418 3-10, 3-11, 3-12, 3-13
W-469 4-13, 5-11, 5-13, 5-15
W-472 1-52, 1-54, 4-13
W-475 1-23, 1-25, 1-29, 1-33, 1-37, 1-45, 1-47, 1-49, 1-51, 4-15, 4-17, 4-19, 4-21, 4-23, 4-25, 4-27, 4-29, 4-31, 4-33, 4-35, 4-37, 4-39, 4-41, 4-43, 4-45, 4-47, 4-53, 5-8
W-476 1-5, 1-41, 3-10, 3-11, 3-12, 3-13, 6-12
W-477 3-15, 3-16, 3-17
W-478 1-41, 4-9
W-479 3-10, 3-12, 4-55
W-480 3-9, 3-11, 3-13, 4-57, 4-59, 5-13, 5-15, 5-31, 5-33, 5-39, 5-43, 5-45, 5-47, 5-61, 5-67, 5-71, 5-87, 5-89, 5-91, 5-93, 5-99, 5-103, 5-105, 5-107, 5-109, 5-111
W-481 1-37, 4-9
W-484 5-112
W-485 4-49
W-486 1-29, 1-33, 1-37, 1-49
W-487 3-3, 3-5
W-490 1-3, 1-5
W-491 1-3, 1-5
W-492 5-107, 5-109, 5-111, 5-112
W-496 1-7
W-512 4-3, 4-5, 4-7, 4-9, 4-11, 4-13, 4-19, 4-21, 4-23, 4-25, 4-27, 4-29, 4-31, 4-33, 4-35, 4-37, 4-39, 4-41, 4-43, 4-45, 4-47, 4-53
W-513 , 6-13, 4-13
W-514 4-3, 4-5, 4-7, 4-9, 5-13, 4-13, 4-15, 4-17, 4-19, 4-21, 4-23, 4-25, 4-27, 4-29, 4-31, 4-33, 4-35, 4-37, 4-39, 4-41, 4-43, 4-45, 4-47, 5-15, 4-17
W-516 1-37, 1-43, 4-49, 1-52, 1-53, 1-54, 1-55, 4-13, 5-17, 5-19, 5-21, 5-23, 5-25, 5-27, 5-29, 5-33, 5-35, 5-37, 5-39, 5-41, 5-43, 5-45, 5-49, 5-51, 5-53, 5-55, 5-57, 5-59, 5-61, 5-63, 5-65, 5-67, 5-69, 5-71, 5-73, 5-75, 5-77, 5-79, 5-81, 5-83, 5-85, 5-93, 5-95, 5-97, 5-99, 5-101, 5-103, 5-105, 5-112
W-517 4-49, 3-5, 5-8, 5-17, 5-19, 5-21, 5-23, 5-25, 5-27, 5-29, 5-31, 5-33, 5-35, 5-37, 5-39, 5-41, 5-43, 5-45, 5-47, 5-49, 5-51, 5-53, 5-55, 5-57, 5-59, 5-61, 5-63, 5-65, 5-67, 5-69, 5-71, 5-73, 5-75, 5-77, 5-79, 5-81, 5-83, 5-85, 5-93, 5-95, 5-97, 5-99, 5-101, 5-103, 5-105, 5-107, 5-109, 5-111
W-518 1-13, 1-15, 1-19, 1-23, 1-25, 1-39, 1-41, 5-17, 1-17, 5-19, 5-21, 5-23, 5-25, 5-29, 5-33, 5-35, 5-37, 5-39, 1-39, 5-41, 1-43, 5-45, 5-49, 5-51, 5-53, 5-55, 5-57, 5-59, 5-61, 5-63, 5-65, 5-67, 5-69, 5-71, 5-73, 5-75, 5-77, 5-79, 5-81, 5-85, 5-93, 5-95, 5-97, 5-99, 5-105, 5-27, 5-43, 5-83, 5-101, 5-103
W-520 1-13, 1-15, 1-17, 1-19, 1-21, 1-23, 1-25, 1-29, 1-31, 1-33, 1-35, 1-37, 1-39, 6-2
W-521 1-51, 4-3, 4-5, 4-7, 4-11, 4-13, 4-19, 4-21, 4-23, 4-25, 4-27, 4-29, 4-31, 4-33, 4-35, 4-37, 4-39, 4-41, 4-43, 4-45, 4-47, 4-53
W-522 3-9, 6-13, 4-13
W-523 4-3, 4-5, 4-7, 4-9, 5-13, 4-13, 4-15, 4-17, 4-19, 4-21, 4-23, 4-25, 4-27, 4-29, 4-31, 4-33, 4-35, 4-37, 4-39, 4-41, 4-43, 4-45, 4-47, 4-53, 5-15, 4-17
W-525 1-37, 1-43, 4-49, 1-52, 1-54, 4-13, 5-17, 5-19, 5-21, 5-23, 5-25, 5-27, 5-29, 5-33, 5-35, 5-37, 5-39, 5-41, 5-43, 5-45, 5-49, 5-51, 5-53, 5-55, 5-57, 5-59, 5-61, 5-63, 5-65, 5-67, 5-69, 5-71, 5-73, 5-75, 5-77, 5-79, 5-81, 5-83, 5-85, 5-93, 5-95, 5-97, 5-99, 5-101, 5-103, 5-105, 5-112
W-526 4-49, 3-5, 5-8, 5-17, 5-19, 5-21, 5-23, 5-25, 5-27, 5-29, 5-31, 5-33, 5-35, 5-37, 5-39, 5-41, 5-43, 5-45, 5-47, 5-49, 5-51, 5-53, 5-55, 5-57, 5-59, 5-61, 5-63, 5-65, 5-67, 5-69, 5-71, 5-73, 5-75, 5-77, 5-79, 5-81, 5-83, 5-85, 5-87, 5-89, 5-91, 5-93, 5-95, 5-97, 5-99, 5-101, 5-103, 5-105, 5-107, 5-109, 5-111
W-527 1-7, 1-9, 1-11, 1-13, 1-15, 1-17, 1-19, 1-21, 1-23, 1-25, 1-29, 1-31, 1-33, 1-35, 1-37, 1-39, 1-41, 5-17, 5-19, 5-21, 5-23, 5-25, 5-29, 5-33, 5-35, 5-37, 5-39, 1-39, 5-41, 1-43, 5-45, 5-49, 5-51, 5-53, 5-55, 5-57, 5-59, 5-61, 5-63, 5-65, 5-67, 5-69, 5-71, 5-73, 5-75, 5-77, 5-79, 5-81, 5-85, 5-93, 5-95, 5-97, 5-99, 5-105, 5-27, 5-43, 5-83, 5-101, 5-103
W-529 3-10, 3-11, 3-12, 3-13
W-538 4-19, 4-21, 4-23, 4-25, 4-27, 4-29, 4-31, 4-33, 4-35, 4-37, 4-39, 4-41, 4-43, 4-45, 4-47, 4-53, 5-31, 5-47, 5-87, 5-89, 5-91, 5-107, 5-109, 5-111
W-539 1-52, 1-53, 1-54, 1-55
W-867 5-4, 5-5
W-1552 5-11, 5-13, 5-15
W-1854 5-13, 5-15
W14501 4-3, 4-5, 4-7, 4-9, 4-29, 4-31, 4-33, 4-35, 4-37, 4-39, 4-41, 4-43, 4-45, 4-47

MORRIS SFE
www.morrisequipment.ca

1891 Albert Street North,
Regina, Saskatchewan
S4R 8R7 Canada
Phone: 306-933-8585
Fax: 306-933-8626

It is the policy of Morris Equipment Ltd. to improve its products whenever it is possible to do so. Morris reserves the right to make changes or add improvements at any time without incurring any obligation to make such changes on machines sold previously.

Printed in Canada

August 2026